Wood Construction Connectors

2021–2023

C-C-2021 | (800) 999-5099 | strongtie.com

SIMPSON Strong-Tie®

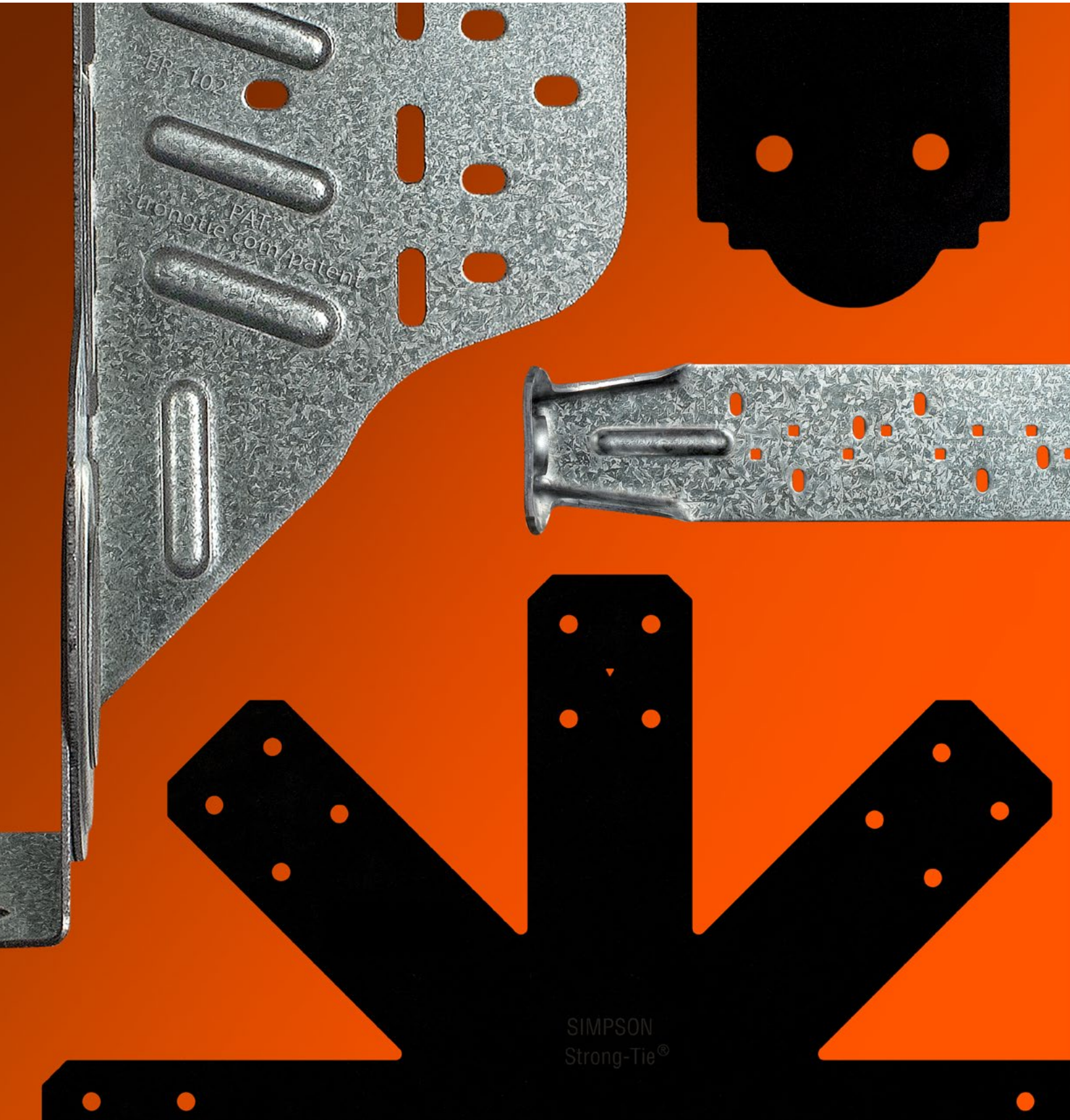

We have exceptionally good products because we have exceptionally good listeners.
Meet the Simpson Strong-Tie Sales Team.

At Simpson Strong-Tie, our commitment to innovation is ultimately a commitment to you. The solutions we create help you work smarter and more efficiently — so you can better meet clients' needs, streamline business operations and build stronger, safer structures and communities.

It's through our dedicated sales team of over 350 — and the deep customer relationships they cultivate — that we're able to craft the quality products and services that help our industry partners succeed. Because we're on the jobsite listening to the challenges, concerns and ideas of our customers, we know firsthand what the needs are. And we bring those needs into our design labs to develop solutions that not only solve our customers' problems, but also advance the industry.

Construction professionals like you trust Simpson Strong-Tie because no one understands them like we do. And no one else can match our sheer number of boots on the ground. Our sales force, along with our entire company, is committed to ensuring that your expectations are exceeded, and that you always have exactly what you need to get the job done right — the first time, every time.

Welcome to our catalog of problem-solving products. Inspired by customers like you.

My customers don't just see me as their sales rep. They see me as their trusted advisor.

Jon Levey Senior Territory Manager, South Florida

I earn my customers' trust by providing the highest possible level of service.

Curt Johnson Territory Manager, Minnesota

Alphabetical Product Index

A Angle 291
A34/A35 Anchor 286–287
ABA/ABU/ABW Post Base 68–69
ABL Anchor Bolt Locator 40
ABS Anchor Bolt Stabilizer 35
AC Post Cap 84–85
AHEP Adjustable Hip-End Purlin 225
AM AnchorMate® Bolt Holder 35
APA/APB/APBDSP/APDJT/APGP/APL/APT/APST Outdoor Accents® — Mission Collection® 320–322
NEW **APBDW** Post Base Decorative Wrap 320
NEW **APBO** Bottle Opener 329
NEW **APDMW/APVDW** Decorative Washers ...329
NEW **APDPC** Decorative Post Cap 329
APDTS Decorative Star 329
NEW **APGT** Gazebo Tie 330
APLH/APHH Outdoor Accents® Joist Hangers 328
NEW **APVA/APVB/APVBDSP/APVDJT/APVGP/APVL/APVT/APVST** Outdoor Accents® — Avant Collection™ 323–325

✓ **BA** Hanger 124–126, 164–166
BC/BCS Cap/Base 83
BP/BPS Bearing Plate 46–47
BT/BTB/BTH Brick Tie 263
BVLZ Brick Veneer Ledger Connector 296–297

CB Column Base 78–79
NEW **CBH** Concealed Beam Hanger 189
CBPC Column Base 333
CBS Column Base 76
✓ **CBSQ** Column Base 76–77
CBTZ Concealed Beam Tie 86
CC Column Cap 90–91
CCC Column Cap 93
CCCQ Column Cap 92
CCCQM Column Cap 261–262
CCO/CCOB Column Cap 90–91
CCOS Column Cap .....Website Only
CCPC Column Cap 333
✓ **CCQ/CCOQ** Column Cap 88–89
CCQM Column Cap 261–262
CCT Column Cap 93
CCTQ Column Cap 92
CCTQM Column Cap 261–262
CF-R Form Angle / Shelf Bracket 314
CHC Component Hoist Clip 234
CJTZ/HCJTZ Concealed Tie 123
CMST Coiled Strap 272–274
CMSTC Coiled Strap 190, 272–274
CNW Coupler Nut 48
CPS Composite Standoff Base 331
CPTZ Concealed Post Tie 70–71
CS Coiled Strap 272–274, 280–282
CSC Ceiling Support Clip 318
CSHP High-Performance Coiled Strap 272–274
CTS Compression Tension Strap 307

DETAL Truss Anchor 254–255
DGF/DGBF/DGHF Fire Wall Hangers 235–237
DJTZ Deck Joist Tie 300
DPTZ Deck Post Tie 299
DS Drywall Stop 314
DSC Drag Strut Connector 224
✓ **DSP** Double Stud Plate 280–282
DTC Roof Truss Clip 232
DTT Deck Tension Tie 52–53, 295
DU/DHU/DHUTF Drywall Hangers ..238–239

ECC/ECCU Column Cap 90–91
ECCL Column Cap 93
ECCLQ Column Cap 92
ECCLQM/ECCLQMD Column Cap .. 261–262
ECCO Column Cap 90–91
✓ **ECCQ/ECCOQ** Column Cap 88–89
EG Hanger 173
✓ **EGQ** Hanger 172
EPB44PHDG Post Base 73
EPB44T Post Base .....Website Only
EPB Post Base 72
EPCZ Post Cap 87

F Hanger 138–139
Fastener Application Guide 338–344
FB/FBFZ/FBR Fence Bracket 303
FGTR Girder Tiedown 258–259
FJA Anchor 25
FPBB (E-Z Base™) 306
FPBM (E-Z Mender™) 306
FPBS (E-Z Spike™) 306
FRFP Foundation Plate 24
FSA Anchor 25
FSS Furring Stabilizer Strap 318
FWANZ Foundation Wall Angle 26
FWH Rigid Tie® 313

GA Angle 290
✓ **GBC** Gable Brace Connector 233
GH Girder Hanger 242
GLB Beam Seat 187
GLS Hanger 170–171

H Hurricane Ties 252–253, 276–279
HB Hanger 124–126, 164–166
HCA Hinge Connector 186
HCP Hip Corner Plate 122, 160
HCSTR Strap .....Website Only
HD/HDB Holdown 56–57
HDQ Holdown 51
✓ **HDU** Holdown 52–53
HETA/HETAL Truss Anchor 254–255
HFN Hanger 138–139
HGA Gusset Angle 279
HGAM Gusset Angle 252–253
HGLB Beam Seat 187
HGLS Hanger 170–171
HGLT/HGLTV Hanger 170–171
HGT Girder Tiedown 260, 284–285
HGU Girder Hanger 144–145
HGUM Girder Hanger 246–248
✓ **HGUS** Hanger 102–103, 141, 199–201
HH Hanger 137
HHDQ Holdown 51
HHETA Truss Anchor 254–255
HHGU Girder Hanger 144–145
HHRC Hip-Ridge Connector 121, 158
HHSUQ Severe Skew Truss Hanger 206
✓ **HHUS** Hanger 102–103, 141, 199–201
✓ **HIT** Hanger 161–163
HL Heavy Angle 292
HM Hurricane Tie 252–253
HPA Purlin Anchor 62–63
HRC Hip-Ridge Connector 121–158
HRS Strap Tie 268–269
HS Hurricane Tie 279
HSCNW Coupler Nut 48
HSLQ Angle 289
HSS Stud Shoe 310
HST Strap Tie 271
✓ **HSUL/R** Hanger 120, 154–155
✓ **HSULC/HSURC** Hanger 120, 154
HTC Heavy Truss Clip 231
HTHGQ Truss Girder Hanger 215–217
HTHMQ Heavy Truss Hanger 222–223
HTP Strap Tie 268–269
HTSM Twist Strap 257
HTSQ Twist Strap .....Website Only
HTS Twist Strap 283
HTT Tension Tie 54–55
HTU Hanger 202–204
HUA Ornamental Hanger 337
HUC Hanger 100–101, 142–143, 243–245
HUCQ Concealed Hanger 103, 142–143
HUCTF Concealed Hanger 130
HU Hanger 100–101, 142–143, 243–245
✓ **HUS** Hanger 102–103, 141, 199–201
HUTF/HUSTF Hanger 130
HWP/HWPH Hanger .. 127–129, 167–169, 205

ICFVL Ledger System 264–265
IS Insulation Supports 318
✓ **ITS** Hanger 161–163
✓ **IUS** Hanger 140

J/JP Floor Beam Leveler 317
JB Hanger 124–126
✓ **JBA** Hanger 124–126

KBSZ Knee-Brace Stabilizer 302

L Angle 290

Value Engineered
This icon indicates a product that is preferable to similar connectors because of (a) easier installation, (b) higher loads, (c) lower installed cost, or a combination of these features.

In addition to the products listed in this catalog, we have additional products on our website, **strongtie.com**. They are listed as "web only" in this index.

C-C-2021 ©2021 SIMPSON STRONG-TIE COMPANY INC.

Alphabetical Product Index

L Strap Tie 294, 334
LB/LBAZ Hanger 124–126
LBP/LBPS Bearing Plate 46–47
LCC Lally Column Cap .....Website Only
LCE Post Cap 84–85
LEG Hanger 173
LFTA Floor Tie Anchor .....Website Only
LGT Girder Tiedown.....258–259, 284–285
LGU Girder Hanger 144–145
LGUM Girder Hanger 246–248
LMAZ Mudsill Anchor..... 30–31
LPCZ Post Cap..... 84–85
LRUZ Rafter Hanger 115–116
LS Angle 290
LSC Light Stair Stringer Connector ..298–299
✓ **LSSJ** Hanger..... 117
NEW **LSSR** Rafter Hanger.....118–119, 156–157
LSTA Strap Tie..... 268–269
✓ **LSTHD** Holdown 58–60
LSTI Strap Tie..... 268–269
LSU Hanger 156–157
LTA2 Truss Anchor 252–253
LTB Bridging 312
✓ **LTHJA** Truss Hanger 211
LTHMA Truss Hanger 207
LTP Framing Angle 286–287
LTS Twist Strap 283
NEW **LTT/LTTI** Tension Tie..... 54–55
LU/LUC Hanger 100–101
✓ **LUS** Hanger 102–112, 199–201

MAB/MASB Mudsill Anchor..... 30–31
✓ **MASA/MASAP** Mudsill Anchor 28–29
NEW **Mass Timber Application Guide**....188–191
MBHA Masonry Hanger 249
MBHU Masonry Beam Hanger..... 250–251
MEG Hanger 173
META Truss Anchor..... 254–255
MGT Girder Tiedown..... 260, 284–285
MGU Girder Hanger 144–145
✓ **MIT** Hanger..... 161–163
MIU Hanger 140
ML Angle..... 301
MP Mending Plate..... 316
MPAI Purlin Anchor 62–63
MPBZ Moment Post Base 80–81
MSC Hanger 174
MSCT Strap Tie 190
MSTAM Strap Tie..... 256
MSTA Strap Tie..... 268–270
MSTC Strap Tie 268–270
MSTCBZ Strap Tie 275
MSTCM Strap Tie 256
MSTD Marriage Strap .....Website Only
MST Strap Tie..... 268–270
MSTI Strap Tie..... 268–269
MSTQM Strap..... 261
MTHMQ/MTHMQ-2 Hanger..... 212–213
MTS Twist Strap..... 283
MTSM Twist Strap..... 257
✓ **MUS** Hanger 199–201

NCA Nailless Bridging 312
NS Nail Stopper 308

OCB/OCC Ornamental Cap/Base..... 333
OHA Ornamental Heavy Angle 334
OHU Ornamental Hanger 336
OL/OT/OHL/OHT Ornamental Strap Tie ...334
OS/OHS Ornamental Strap Tie 335
OU Ornamental Hanger..... 335

PA Holdown/Purlin Anchor 61–63
PAB Anchor Bolt 42–43
PAI Purlin Anchor 62–63
PB/PBS Post Base 74–75
PBV Standoff Post Base 331
PCZ Post Cap..... 87
PF/PFB/PFDB Hanger 136
PGT/PGT2A/PGT2E/PGTIC
Pipe Grip Tie®..... 304–305
NEW **PPBF** Adjustable Porch Post Base..... 82
PPBZ Post Base 82
PS/PSQ Pile Strap 271
PSCL/PSCA Sheathing Clip..... 316
PSPNZ Protective Plate 308

RBC Roof Boundary Clip..... 288
RC Ripper Clip 315
✓ **RCKW** Kneewall Connector 293
RCWB Wall Bracing 311
RFB Retrofit Bolt 48
RP6 Retrofit Plate..... 46–47
RPBZ Retrofit Post Base..... 66–67
RPS Strap Tie 309
RR Ridge Rafter Connector..... 137
RSP Stud Plate Tie..... 280–282
RTA/RTB/RTC/RTC2Z/RTF/RTRZ/
RTT/RTU Rigid Tie® 313
RTC Post Cap..... 84–85, 313

SA36 Strap Connector .....Website Only
SAKT Shallow Podium Slab Anchor Kit ... 40
SAR Shallow Anchor Rod..... 40
✓ **SB** Anchor Bolt 32–34
SBV Shelf Bracket..... 314
SD Outdoor Accents®
Connector Screw 326–327
SD Wafer-Head Screw 315
SDWS Outdoor Accents®
Structural Wood Screw 326–327
SM1 StrapMate® Strap Holder 60
SP/SPH Stud Plate Tie..... 280–282
Special Order Parts 336
SS Stud Shoe 310
✓ **SSP** Single Stud Plate 280–282
✓ **SSTB®** Anchor Bolt 36–39
Stainless-Steel Titen HD®
Heavy-Duty Screw Anchor..... 354
STC/STCT Roof Truss Clip..... 232
✓ **STHD** Holdown 58–60
STN22 Outdoor Accents®
Hex-Head Washer 326–327

Strong-Drive® SCN/SCNR
Connector Nails..... 345
Strong-Drive® 33° SCN/SCNR
Connector Collated Nails..... 346
Strong-Drive® SD CONNECTOR
Screws 348–352
NEW **Strong-Drive® SD CONNECTOR SS**
Screws 348–352
Strong-Drive® SDS HEAVY-DUTY
CONNECTOR Screw 347
ST Strap Tie 268–269
✓ **SUR/SUL** Hanger 120, 154–155
SURC/SULC Hanger 120, 154

T Strap Tie 294, 334
TA Staircase Angle 300
TB Tension Bridging 312
TBE Truss Bearing Enhancer..... 228–229
TBP Seat Plate..... 254
TC Truss Connector 230
✓ **THA/THAC** Hanger 192–194
THAI Hanger 153
✓ **THAR/L** Truss Hanger 195
THASR/L Truss Hanger..... 196–197
THGB/THGBH Hanger 218–221
THGBV/THGBHV Hanger..... 218–221
✓ **THGQ/THGQH** Hanger..... 215–217
THGW/THGWV Hanger 218–221
THJA Truss Hanger..... 211
THJM Truss Hanger 214
THJU Truss Hanger..... 210
Titen HD® Heavy-Duty Screw Anchor.....354
TJC Truss Connector 208–209
TNT Titen Turbo™ Concrete
and Masonry Screws..... 353
TP/TPA Tie Plate..... 317
TSBR Truss Spacer..... 227
TSF Truss Spacer..... 226
TSP Stud Plate Tie.....276–278, 280–282
TSS Truss Seat 254–255
TWB Wall Bracing 311

U Hanger.....100–101, 142–143
UA Ornamental Hanger 337
URFP Foundation Plate..... 24

VB Knee Brace..... 185
VGT Variable Girder Tiedown.....
.....258–259, 284–285
VPA Connector 122, 159
✓ **VTCR** Valley Truss Clip 198

WB/WBC Wall Bracing..... 311
WBSK Workbench/Shelving Kit..... 313
WMU Hanger...127–129, 167–169, 240–241
WP Hanger 127–129, 167–169, 205
WT Wedge Form Tie 27

Z Clip 292

See the Product Nomenclature Guide (F-NOMENCLATR) at **strongtie.com** for a description of product acronyms.

C-C-2021 ©2021 SIMPSON STRONG-TIE COMPANY INC.

Subject Index

General Information
Code Reports 11
Corrosion Information 12–15
Discontinued Products 9
Important Information and General Notes 16–19
New Products 8

Fasteners
Concrete/CMU 353–354
Fastener Application Guide 338–344
Screw Type and Information 21–22, 337–352

Concrete Connectors and Anchors
Anchor Solutions 23
Anchor Bolts 32–34, 36–39, 42–43
Anchor Bolt Holder 35
Angles 26
Beam Seats 187
Bearing Plates 46–47
Column Caps 261–262
Coupler Nuts 48
Foundation Anchors 25
Girder Tiedowns 258–260
Hangers 240–251
Holdown Anchorage Solutions 44–45
Hurricane Ties 252–253
ICF Ledger Connectors 264–265
Mudsill Anchors 28–31
Purlin Anchors 62–63
Strap Ties 256, 294
Strap-Tie Holdowns 58–61
Truss Anchors 252–255
Wedge Form Ties 27

Fire Wall Hangers 235–239

Holdowns and Tension Ties
General Information and Notes 49–50
Holdowns 51–53, 56–57
Purlin Anchors 62–63
Tension Ties 54–55

Bases and Caps
Post/Column Bases and Caps 65–93

Hanger Options 97–99

Solid Sawn Joist Hangers
Adjustable Rafter Connectors 115–119
Concealed Joist Tie 123
Face-Mount Hangers 100–120
Hip-Ridge and Corner Connectors 121–122
Rough Lumber Hangers 114
Skewed 45° Hangers 120
Top-Flange Hangers 124–136

I-Joist, Glulam and Structural Composite Lumber Connectors
Adjustable Hangers 153–157
Beam Seats 187
Face-Mount Hangers 141–152
General Installation Information 95–96
Hinge Connectors 186
Hip-Ridge and Corner Connectors 158–160
Purlin Anchors 62–63
SDW Multi-Ply LVL Fastener 340
Sloped/Skewed Connectors 154–157
Top-Flange Hangers 161–184
VB Knee Brace 185

Mass Timber Application Guide 188–191

Plated Truss Connectors
Adjustable Hangers 192–197
Bridging/Spacers/Braces 226–229
Face-Mount Hangers 199–204
Gable End 233
Girder Hangers 215–221
Girder Tiedowns 258–260
Hoist Clip for Lifting Panels 234
Multi-Member Hangers 222–223
SDW Multi-Ply Fastener 340
Special Order Plates 336
Top-Flange Hangers 205
Truss-to-Wall Connectors 228–230, 232
Valley Truss Clips 198

Masonry and Concrete Connectors
Anchor Solutions 23
Anchor Bolts 32–34, 36–39, 42–43
Beam Seats 187
Brick Ties 263
Column Caps 261–262
Girder Tiedowns 258–260
Hangers 240–251
Hurricane Ties 252–253
Mudsill Anchors 28–31
Purlin Anchors 62–63
Strap Ties 256, 294
Truss Anchors 252–255

Straps and Ties
Angles and Clips 286–292, 300–301, 316
Adjustable Stringer Connector 298–299
Hurricane Ties 252–253, 276–279
Straps 268–275, 283, 294, 307, 309

Decks and Fences
Angles 300–301
Deck Post Connectors 295, 299–300, 302
Fence Products 300–306
Joist Tie 300, 322–323
Staircase Angle 300

Miscellaneous
Bridging 312
Compression/Tension Straps 307
Custom Steel Plates 336
Drywall Stops 314
Framing Clips 286–288, 290, 292
Floor Beam Leveler 317
Gazebo Tie 330
Insulation Supports 318
Knee Brace 185, 302
Mending Plates 316
Metric Conversion 20
Nail Stoppers 308
Panel Sheathing Clips 316
Ridge Rafter Connector 137
Rigid Ties 313
Shelf Brackets 314
Special Order Parts 336
Stud Shoes 310
Stair Connectors 300
T and L Strap Ties 294, 321, 324
Tie Plates 317
Variable Pitch Connectors 122, 159
Wall Bracing 311

Decorative Hardware
Concealed Joist Ties 123
Indoor Architectural Products 332–337
Outdoor Accents® 319–329
Standoff Bases 331

Website Only
Hinge Connector Straps (HCSTR) ..... Website Only
Lally Column Caps (LCC) ..... Website Only
Marriage Strap (MSTD) ..... Website Only
Post Allowable Loads ..... Website Only
Strap Connector (SA) ..... Website Only

C-C-2021 ©2021 SIMPSON STRONG-TIE COMPANY INC.

Introduction

For more than 60 years, Simpson Strong-Tie has focused on creating structural products that help people build safer and stronger homes and buildings. A leader in structural systems research and technology, Simpson Strong Tie is one of the largest suppliers of structural building products in the world. The Simpson Strong-Tie commitment to product development, engineering, testing and training is evident in the consistent quality and delivery of its products and services.

For more information, visit the company's website at **strongtie.com**.

The Simpson Strong-Tie Company Inc. No-Equal Pledge® includes:

- Quality products value-engineered for the lowest installed cost at the highest-rated performance levels
- The most thoroughly tested and evaluated products in the industry
- Strategically located manufacturing and warehouse facilities
- National code agency listings
- The largest number of patented connectors in the industry
- Global locations with an international sales team
- In-house R&D and tool and die professionals
- In-house product testing and quality control engineers
- Support of industry groups including AISI, AITC, ASTM, ASCE, AWC, AWPA, ACI, AISC, CSI, CFSEI, ICFA, NBMDA, NLBMDA, SBCA, SDI, SETMA, SFA, SFIA, STAFDA, SREA, NFBA, TPI, WDSC, WIJMA, WTCA and local engineering groups

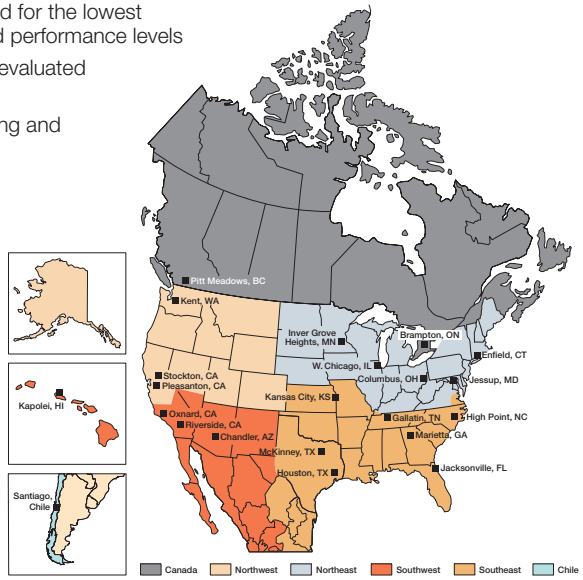

The Simpson Strong-Tie Quality Policy

We help people build safer structures economically. We do this by designing, engineering and manufacturing No-Equal® structural connectors and other related products that meet or exceed our customers' needs and expectations. Everyone is responsible for product quality and is committed to ensuring the effectiveness of the Quality Management System.

Karen Colonias
Chief Executive Officer

Getting Fast Technical Support

When you call for engineering technical support, having the following information on hand will help us to serve you promptly and efficiently:

- Which Simpson Strong-Tie® catalog are you using? *(See the front cover for the catalog number.)*
- Which Simpson Strong-Tie product are you using?
- What is your load requirement?
- What is the carried member's width and height?
- What is the supporting member's width and height?
- What is the carried and supporting members' material and application?

You should consult a qualified design professional familiar with all applicable building codes each time you use a Simpson Strong-Tie product.

We Are ISO 9001 Registered

Simpson Strong-Tie is an ISO 9001 registered company. ISO 9001 is an internationally recognized quality management system that lets our domestic and international customers know they can count on the consistent quality of Simpson Strong-Tie products and services.

(800) 999-5099 | strongtie.com

All rights reserved. This catalog may not be reproduced in whole or in part without the prior written approval of Simpson Strong-Tie Company Inc.

C-C-2021 ©2021 SIMPSON STRONG-TIE COMPANY INC.

General Information 10–22
Concrete Connectors and Anchors 23–48
Holdowns and Tension Ties 49–63
Bases and Caps 65–93
Solid Sawn Joist Hangers 100–139
I-Joist, Glulam and Structural Composite Lumber Connectors 140–187
Mass Timber Connectors 188–191
Plated Truss Connectors 192–234
Fire Wall Hangers 235–239
Masonry and Concrete Connectors 240–265
Straps and Ties 266–294
Decks and Fences 295–306
Miscellaneous 307–318
Decorative Hardware 319–337
Fasteners 338–355

New Products for 2021

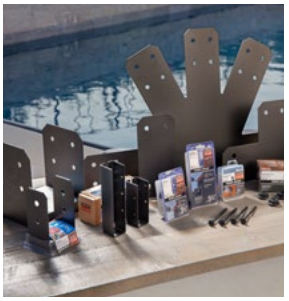

APVA/APVB/APVBDSP/APVDJT/ APVL/APVT/APVST/APVDW56/APVGP

Outdoor Accents® Avant Collection™

New products and new sizes have been added to the Outdoor Accents decorative hardware product line, our collection of connectors and fasteners that bring beauty and strength to custom outdoor living structures.

See pp. 323–325 for more information.

LTTP2 Tension Tie

The patent-pending LTTP2 is a new addition to the tension tie product line. The LTTP2 is designed to be used with both solid sawn and I-joist purlins. LTTP2 is also designed to be installed vertically on a stud for holdown application.

See pp. 54–55 for more information.

LSSR Slopeable/Skewable Rafter Hanger

The patent-pending LSSR light slopeable/skewable rafter hanger series now includes 2x models for solid sawn lumber. One of its key features is it can be installed after all of the rafters have been tacked into place. A versatile hanger, it is field adjustable for skew up to 45° and features an innovative hinged swivel seat to adjust for up to a 45° slope.

See pp. 118–119 for more information.

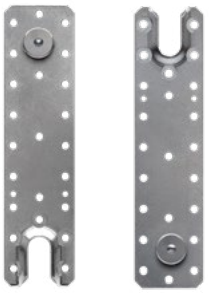

CBH Concealed Beam Hanger

Computer modeling and CNC manufacturing in mass timber construction enables glulam to be delivered to the jobsite in precise lengths and with preinstalled concealed hangers. The CBH concealed beam hanger is specifically designed for such applications, and is installed with readily available Simpson Strong-Tie® SDS Heavy-Duty Connector screws.

See p. 189 for more information.

APDPC/APBDW/APBO/APGT

Outdoor Accents® Accessories Collection

New additions to the Outdoor Accents decorative hardware line include a post base wrap and bottle opener as well as complementary products like the APDPC decorative post cap and a full line of black powder coated gazebo ties.

See p. 329 for more information.

C-C-2021 ©2021 SIMPSON STRONG-TIE COMPANY INC.

Products to Be Discontinued in 2021

Simpson Strong-Tie is dedicated to continuously expanding our line of structural connectors with innovative new products that address the changing needs of our customers. As new connectors are introduced that improve upon older designs, it becomes necessary to discontinue the old versions in the name of efficiency and product-line simplicity.

The table on the right lists products that are no longer included in the *Wood Construction Connectors* catalog as well as the products recommended to replace them. While technical information for discontinued products will be maintained on our website for a number of months, Simpson Strong-Tie asks that our customers begin to substitute the replacement products shown below in their designs and inventories. While it is hard to say when they will no longer be available from our distribution partners, production of some of these connectors ended in 2020 and others will be phased out of production in 2021. Verify with designer prior to substituting replacement product for specified product.

For the most current information on discontinued products, visit **strongtie.com/discontinued**. If you have questions about any of the products shown below, please call (800) 999-5099 for assistance.

Discontinued Product	**Replacement Product** (C-C-2021 Page #)
Column Caps / Bases	
DPPC (Limited availability)	APDPC (p. 329)
OECC66 / OECC88 (Limited availability)	ECC66PC/ECC88PC (p. 90)
Hanger / Tension Tie	
F46 (Limited availability)	F46Z (p. 138)
Holdown	
LTT19/LTT20B (Limited availability)	LTTP2 (pp. 54–55)
Straps / Ties / Clips	
CS18 / CS22 (Limited availability)	CSHP (pp. 272–273)
GT2Z (Limited availability)	APGT2 (p. 330)
GT6Z (Limited availability)	APGT6 (p. 330)
GT8Z (Limited availability)	No replacement
GTFZ (Limited availability)	APGTF (p. 330)
PGT20Z (Limited availability)	PGT2A (p. 304)
RTA12 (Limited availability)	RTA12Z (See **strongtie.com**)
RTR (Limited availability)	RTRZ (p. 313)
TBD22 (Limited availability)	No replacement

C-C-2021 ©2021 SIMPSON STRONG-TIE COMPANY INC.

How We Determine Allowable Loads

Allowable loads in this catalog are determined by calculations and test criteria established by industry, such as ICC-ES Acceptance Criteria, IAPMO UES Evaluation Criteria and ASTM test standards.

Connectors are typically evaluated in accordance with ICC-ES AC13 — Acceptance Criteria for Joist Hangers and Similar Devices. Evaluation is based on a minimum of three static load tests in wood assemblies. The published allowable load is the lower of the tested ultimate with a safety factor of 3, load at ⅛" deflection or the NDS fastener calculation limits.

Holdowns and tension ties are tested in accordance with ICC-ES AC155 — Acceptance Criteria for Hold-Downs (Tie-Downs) Attached to Wood Members. Allowable loads are based on the lower of three static load tests with a safety factor, deflection limits or NDS fastener calculation limits. Static load tests include holdown testing on steel jigs and wood assembly tests.

Cast-in-place concrete products are tested in accordance with ICC-ES AC398 — Cast-in-Place, Cold-Formed Steel Connectors in Concrete for Light-Frame Construction or AC399 — Cast-in-Place Proprietary Bolts in Concrete for Light-Frame Construction. Threaded fasteners are evaluated per AC233 — Alternate Dowel-Type Threaded Fasteners.

Where a test standard is unavailable, testing is conducted per sound engineering principles. Some tests include only portions of a product, such as purlin anchor tests, wherein only the embedded hook is tested, not the nailed or bolted section of the strap, which is calculated. Testing to determine allowable loads in this catalog is not done on connection systems in buildings. Testing is conducted under the supervision of an independent laboratory.

For detailed information regarding how Simpson Strong-Tie tests specific products, contact Simpson Strong-Tie.

Load Table Explanation

Model No.: This is the Simpson Strong-Tie product name.

Nails: This shows the fastener quantity and type required to achieve the table loads.

Allowable Design Loads: The maximum load that a connection is designed to provide. There may be multiple design loads acting in different directions (up, down, lateral, perpendicular, etc.) imposed on a connection.

Uplift **Down** **Lateral**

Hanger Load Table Explanation, see p. 94.

Model No.	Dimensions (in.)			Nails (in.)	Allowable Loads					Code Ref.
					Uncracked	Cracked	Download	F_1	F_2	
	W	L	H		Uplift (160)	Uplift (160)	(100)	(160)	(160)	
Wind and Seismic Design Category A&B										
EPB44A	3 9/16	3	2 3/8	(8) 0.162 x 3½	1,075	755	2,670	695	795	IBC, FL, LA
EPB44	3 9/16	3¼	2 5/16	(8) 0.162 x 3½	995	695	3,465	850	965	
EPB46	5½	3 5/16	3	(12) 0.162 x 3½	995	695	3,465	850	965	
EPB66	5½	5½	3	(12) 0.162 x 3½	995	695	3,465	850	965	
Seismic Design Category C–F										
EPB44A	3 9/16	3	2 3/8	(8) 0.162 x 3½	940	660	2,670	695	795	IBC, FL, LA
EPB44	3 9/16	3¼	2 5/16	(8) 0.162 x 3½	870	605	3,465	850	965	
EPB46	5½	3 5/16	3	(12) 0.162 x 3½	870	605	3,465	850	965	
EPB66	5½	5½	3	(12) 0.162 x 3½	870	605	3,465	850	965	

Code Ref.: See p. 11 for the Code Reference Key Chart, to determine which code reports include this product.

Wind or Seismic: Some cast-in-place concrete products have different load ratings based on wind or seismic design category.

Product Drawing: Provides a graphic presentation of the product with dimensional information (often cross-referenced to the table).

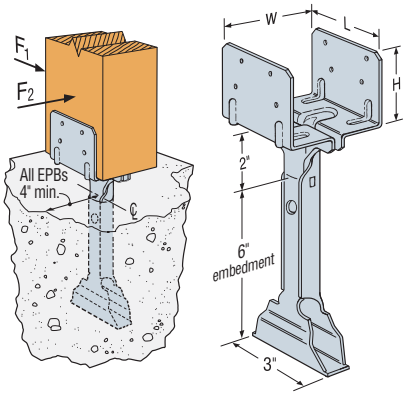

Dimensions W, L, H: This shows the product dimensions (width, length and height in this case) referenced in the product drawing.

Fasteners: Nail dimensions are listed diameter by length. See pp. 21–22 for other nail sizes and information.

Throughout this catalog a footnote will typically be provided indicating the required nail diameter and length.

All installations should be designed only in accordance with the allowable load values set forth in this catalog.

C-C-2021 ©2021 SIMPSON STRONG-TIE COMPANY INC.

Code Reference Column in Load Tables

Product evaluation agencies play an important role in the building industry providing an independent third-party review of architectural and structural products. Evaluations use publicly developed criteria to determine if the product meets the intent of the building code. Building officials can use product evaluation reports, often referred to as "code reports," to review and approve product use on a project.

The most prominent architectural and structural building product certification companies are ICC Evaluation Service (ICC-ES) and IAPMO Uniform Evaluation Service (IAPMO UES), which are both ANSI-accredited to ISO Guide 65 "General Requirements for Bodies Operating Product Certification Systems" as product certification entities. Simpson Strong-Tie currently maintains more than 60 ICC-ES ESR and IAPMO UES ER reports evaluated to the 2006, 2009, 2012, 2015, 2018 and 2021 International Building Code® (IBC) and International Residential Code® (IRC). We continue to submit product information to evaluation agencies in order to update reports or receive additional reports for products in compliance with the latest codes. Simpson Strong-Tie also has reports for the City of Los Angeles, California and the State of Florida.

We have simplified our code references to make this catalog easier to use. You can quickly determine whether a product has a code report by looking in the Code Reference column of the product load tables. A summary of the code references used is in the table below.

To determine which specific code report applies to a product and download a copy of the code report, you can use our Code Report Finder at **strongtie.com/codes**.

Code Reference	Evaluation Agency	Building Code Coverage
IBC	ICC-ES IAPMO UES	International Building Code (IBC) International Residential Code (IRC)
FL	Florida Statewide Product Approval	Florida Building Code Visit **strongtie.com/codes** or **floridabuilding.org** for accurate and up-to-date product approval and evaluation reports.
LA	City of Los Angeles Department of Building Safety	Los Angeles Building Code and Los Angeles Residential Code These products may have a City of LA supplement to their ICC-ES or IAPMO UES evaluation reports.
PR	Prescriptive	Products that meet prescriptive or conventional construction requirements.
—	None	No evaluation report listing.

How to Use This Catalog

- **New Products**
  New products are shown with the NEW symbol. There are also many new sizes within existing model series.

- **Changes in Orange**
  Significant changes from the previous catalog are indicated in orange.

Value Engineered
This icon indicates a product that is preferable to similar connectors because of a) easier installation, b) higher loads, c) lower installed cost, or a combination of these features.

Extra Corrosion Protection
The teal arrow icon identifies products that are available with additional corrosion protection (ZMAX®, hot-dip galvanized or double-barrier coating). The SS teal arrow icon identifies products also available in stainless steel. Other products may also be available with additional protection; contact Simpson Strong-Tie for options. The end of the product name will indicate what type of extra corrosion protection is provided (Z = ZMAX, HDG = hot-dip galvanized or SS = stainless steel). Stainless products may need to be manufactured upon ordering. See p. 14 for information on corrosion, and visit our website **strongtie.com/info** for more technical information on this topic.

Strong-Drive® SD Connector Screw Compatible
This icon identifies products approved for installation with Simpson Strong-Tie® Strong-Drive® SD Connector screw. See pp. 348–352 for more information.

C-C-2021 ©2021 SIMPSON STRONG-TIE COMPANY INC.

Corrosion Information

Understanding the Corrosion Issue

Metal connectors, fasteners and anchors can corrode and lose carrying capacity when installed in corrosive environments or when installed in contact with corrosive materials. The many variables present in a building environment make it impossible to predict accurately whether, or when, corrosion will begin to reach a critical level. This relative uncertainty makes it crucial that specifiers and users be knowledgeable about the potential risks and select a product suitable for the intended use. When there is any uncertainty about the possible corrosion risks of any installation, a qualified professional should be consulted. Because of the risks posed by corrosion, periodic inspections should be performed by a qualified engineer or qualified inspector and maintenance performed accordingly.

It's common to see some corrosion in outdoor applications. Even stainless steel can corrode. The presence of some corrosion does not mean that load capacity has been affected or that failure is imminent. If significant corrosion is apparent or suspected, then the wood, fasteners, anchors, and connectors should be inspected by a qualified engineer or qualified inspector. Replacement of affected components may be appropriate.

Because of the many variables involved, Simpson Strong-Tie cannot provide estimates of the service life of connectors, anchors, and fasteners. We suggest that all users and specifiers obtain recommendations on corrosion from the suppliers of the materials that will be used with Simpson Strong-Tie products, in particular, treated wood or concrete. We have attempted to provide basic knowledge on the subject here, and have additional information in our technical bulletins on the topic (**strongtie.com/info**). The Simpson Strong-Tie website should always be consulted for the latest information.

Corrosion Conditions

Corrosion can result from many combinations of environmental conditions, materials, construction design, and other factors, and no single guideline addresses all corrosion possibilities. Nevertheless, important corrosion information can be obtained from the American Wood Protection Association (AWPA), the International Building Code (IBC), International Residential Code (IRC), and local building codes. The following discussion provides general guidelines and approaches for the selection of Simpson Strong-Tie products for various construction conditions, but is not intended to supersede the guidelines of the AWPA, IBC, IRC, or local building codes.

Corrosion issues for Simpson Strong-Tie products generally fall into four categories:

1. Environmental and Construction Factors

Many environments and materials can cause corrosion, including ocean salt air, condensation, duration of wetness, fire retardants, fumes, fertilizers, chlorides, sulfates, preservative-treated wood, de-icing salts, dissimilar metals, soils, and more. Designers must take all of these factors into account when deciding which Simpson Strong-Tie products to use with which corrosion-resistant coatings or materials.

The design, quality of construction, and misinstallation can directly affect the corrosion resistance of products. A product intended and installed for use in dry-service environment may corrode if the structure design or building materials allow moisture intrusion, or expose the product to corrosive conditions, such as moisture or chemicals contained in the construction materials, soils, or atmospheres.

2. Chemically Treated Lumber

Some wood-preservative or fire-retardant chemicals or chemical retention levels create increased risk of corrosion and are corrosive to steel connectors and fasteners. For example, testing by Simpson Strong-Tie has shown that ACQ-Type D is more corrosive than Copper Azole, Micronized Copper Azole, or CCA-C. At the same time, other tests have shown that inorganic boron treatment chemicals, specifically SBX-DOT, are less corrosive than CCA-C.

Because different chemical treatments of wood have different corrosion effects, it's important to understand the relationship between the wood treatment chemicals and the coatings and base metals of Simpson Strong-Tie products.

The preservative-treated wood supplier should provide all of the pertinent information about the treated wood product. The information should include the AWPA Use Category Designation, wood species group, wood treatment chemical, and chemical retention. See building code requirements and appropriate evaluation reports for corrosion effects of wood treatment chemicals and for fastener corrosion resistance recommendations.

With Fire-Retardant (FRT) Wood, the 2015 and 2018 IBC Section 2304.10.5, 2021 IBC Section 2304.10.6, and 2015, 2018 and 2021 IRC Section R317.3.4 refer to the manufacturers for fastener corrosion reqirements. In the absence of recommendations from the FRT manufacturer, the building codes require fasteners to be hot-dip galvanized, stainless steel, silicon bronze or copper. Simpson Strong-Tie further requires that the fastener is compatible with the metal connector hardware. Fastener shear and withdrawal allowable loads may be reduced in FRT lumber. Refer to the FRT manufacturer's evaluation report for potential reduction factors.

3. Dissimilar Metals and Galvanic Corrosion

Galvanic corrosion occurs when two electrochemically dissimilar metals contact each other in the presence of an electrolyte (such as water) that acts as a conductive path for metal ions to move from the more anodic to the more cathodic metal. Good detailing practice, including the following, can help reduce the possibility of galvanic corrosion of fasteners and connectors:

- Use fasteners or anchors and connectors with similar electrochemical properties
- Use insulating materials to separate dissimilar metals
- Ensure that the fastener or anchor is the cathode when dissimilar connector metals are present
- Prevent exposure to and pooling of electrolytes

Galvanic Series of Metals

Corroded End (Anode)
Magnesium, Magnesium alloys, Zinc
Aluminum 1100, Cadmium, Aluminum 2024-T4, Iron and Steel
Lead, Tin, Nickel (active), Inconel Ni-Cr alloy (active), Hastelloy alloy C (active)
Brasses, Copper, Cu-Ni alloys, Monel
Nickel (passive)
304 stainless steel (passive), 316 stainless steel (passive), Hasteloy alloy C (passive)
Silver, Titanium, Graphite, Gold, Platinum
Protected End (Cathode)

If you are uncertain about the galvanic corrosion potential of any installation, always consult with a corrosion expert. See the product pages for particular parts for more information regarding what coating systems are recommended or required for use with the parts in question.

4. Hydrogen-Assisted Stress Corrosion Cracking

Some hardened fasteners may experience premature failure from hydrogen-assisted stress-corrosion cracking if exposed to moisture. These fasteners are recommended for use only in dry-service conditions.

5. Indoor Swimming Pools

Indoor swimming pool environments are extremely corrosive to steel products. And some stainless steel is highly susceptible to stress corrosion cracking (SCC) under sustained loads in this environment. SCC can result in sudden failures. Instead of stainless steel, it is advised to use a duplex coated, post-hot-dip galvanized or ZMAX® coated low carbon steel for any load bearing components used in swimming pool environments. Regular maintenance is strongly advised. See **strongtie.com/corrosion** for additional information.

C-C-2021 ©2021 SIMPSON STRONG-TIE COMPANY INC.

Corrosion Information

Guidelines for Selecting Materials and Coatings

In the discussion and charts of this section, Simpson Strong-Tie presents a three-step system to determine which product coatings and base metals to use in a range of corrosion conditions. These are general guidelines that may not consider all relevant application criteria. Refer to product-specific information for additional guidance.

Simpson Strong-Tie evaluated the AWPA Use Categories (See AWPA U1-16) and ICC-ES AC257 Exposure Conditions and developed a set of corrosion resistance recommendations. These recommendations address the coating systems and materials used by Simpson Strong-Tie for fastener, connector, and anchor products. Although the AWPA Use Categories and ICC-ES AC257 Exposure Conditions specifically address treated-wood applications and some common corrosion agents, Simpson Strong-Tie believes that its recommendations may be applied more generally to other application conditions, insofar as the service environments discussed are similar. You should consult with a corrosion engineer concerning the application where advisable.

Step 1 — Evaluate The Corrosion Conditions

- **Dry Service:** Generally INTERIOR applications including wall and ceiling cavities, and in raised floor applications in enclosed buildings that have been designed to prevent condensation and exposure to other sources of moisture. Prolonged periods of wetness during construction should also be considered, as this may constitute a Wet Service or Elevated Service condition. Dry Service is typical of AWPA UC1 and UC2 for wood treatment and AC257 Exposure Condition 1. Keep in mind that dry-service environment may contain airborne salts. AC257 Exposure Condition 2 reflects the presence of airborne salt in a dry-service environment and corrosion hazard to exposed metal surfaces. It does not include effects of treatment chemicals. This condition is generally considered in Elevated and Uncertain assessments.
- **Wet Service:** Generally EXTERIOR construction in conditions other than elevated service. These include Exterior Protected and Exposed and General Use Ground Contact as described by AWPA UC4A. The AWPA U1 standard classifies exterior above-ground treatments as Use Categories UC3 (A and B) depending on moisture run-off; and for exterior ground-contact levels of protection, it has Use Categories UC4 (A-C). ICC-ES AC257 considers the exterior exposure to be limited by the presence of treatment chemicals, and corrosion accelerators. In general, the AC257 Exposure Condition 1 includes AWPA Use Categories UC1 (interior/dry) and UC2 (interior/damp), while Exposure Condition 3 is a surrogate to UC3A, 3B, and 4A (exterior, above-ground and ground-contact, general use). The ICC-ES AC257 Exposure Conditions 2 and 4 are exposures that are salt environments.
- **Elevated Service:** Includes fumes, fertilizers, soil, some preservative-treated wood (AWPA UC4B and UC4C), industrial-zone atmospheres, acid rain, salt air, and other corrosive elements.
- **Uncertain:** Unknown exposure, materials, or treatment chemicals.
- **Ocean/Water Front Service:** Marine environments that include airborne chlorides, salt air, and some salt splash. Environments with de-icing salts are included.

Step 2 — Determine Your Corrosion Resistance Classification

Corrosion Resistance Classifications

Environment	Material to Be Fastened						
	Untreated Wood or Other Material	Preservative-Treated Wood					FRT Wood
		SBX-DOT Zinc Borate	Chemical Retention ≤ AWPA, UC4A	Chemical Retention > AWPA, UC4A	ACZA	Other or Uncertain	
Dry Service	Low	Low	Low	High	Medium	High	Medium
Wet Service	Medium	N/A	Medium	High	High	High	High
Elevated Service	High	N/A	Severe	Severe	High	Severe	N/A
Uncertain	High	High	High	Severe	High	Severe	Severe
Ocean/Water Front	Severe	N/A	Severe	Severe	Severe	Severe	N/A

Additional Considerations

1. Always consider the importance of the connection as well as the cost of maintenance and replacement.
2. If the information about treatment chemicals in an application is incomplete, or if there is any uncertainty as to the service environment of any application, Simpson Strong-Tie recommends the use of a Type 300 Series stainless steel. Simpson Strong-Tie has evaluated the corrosion effects of various formulations of wood treatment chemicals ACZA, ACQ, CCA, MCA, CA, and salt as corrosion accelerators. Simpson Strong-Tie has not evaluated all formulations and retentions of the named wood treatment chemicals other than to use coatings and materials in the severe category. Manufacturers may independently provide test results or other product information. Simpson Strong-Tie expresses no opinion regarding such information.
3. Type 316/305/304 stainless-steel products are recommended where preservative-treated wood used in ground contact has a chemical retention level greater than those for AWPA UC4A; CA-C, 0.15 pcf (pounds per cubic foot); CA-B, 0.21 pcf; micronized CA-C, 0.14 pcf; micronized CA-B, 0.15 pcf; ACQ-Type D (or C), 0.40 pcf. When wood treated with micronized CA-C and micronized CA-B with treatment retentions up to UC4B is in dry service, hot-dip galvanized fasteners and connectors may be suitable.
4. Mechanical galvanizations C3 and N2000 should not be used in conditions that would be more corrosive than AWPA UC3A (exterior, above ground, rapid water run off).
5. Some chemically treated wood may have chemical retentions greater than specification, particularly near the surface, making it potentially more corrosive than chemically treated wood with lower retentions. If this condition is suspected, use Type 316/305/304 stainless-steel, silicon bronze, or copper fasteners.
6. Some woods, such as cedars, redwood, and oak, contain water-soluble tannins and are susceptible to staining when in contact with metal connectors and fasteners. According to the California Redwood Association (**calredwood.org**), applying a quality finish to all surfaces of the wood prior to installation can help reduce staining.
7. Anchors, fasteners and connectors in contact with FRT lumber shall be hot-dip galvanized or stainless steel, unless recommended otherwise by the FRT manufacturer. Many FRT manufacturers permit low-corrosion-resistant connector and fastener coatings for dry-service conditions.
8. Simpson Strong-Tie does not recommend painting stainless-steel anchors, fasteners or connectors. Imperfections or damage to the paint can facilitate collection of dirt and water that can degrade or block the passive formation of the protective chromium oxide film. When this happens, crevice corrosion can initiate and eventually become visible as a brown stain or red rust. Painting usually does not improve the corrosion resistance of stainless steel.

C-C-2021 ©2021 SIMPSON STRONG-TIE COMPANY INC.

Guidelines for Selecting Materials and Coatings (cont.)

Step 3 — Match Your Corrosion Resistance Classification to the Coatings and Materials Available

Not all products are available in all finishes. Contact Simpson Strong-Tie for product availability, ordering information and lead times.

Coatings and Materials Available for Connectors

Level of Corrosion Resistance	Coating or Material	Description	
		Connectors	**Fastener Material or Finish**
Low	**Gray or Black Paint**	Organic paint intended to protect the product while it is warehoused and in transit to the jobsite.	Bright, Hot-Dip Galvanized, Mechanically Galvanized, or Double-Barrier Coating
	Powder Coating	Baked-on paint finish that is more durable than standard paint.	
	Galvanized	Standard (G90) zinc-galvanized coating containing 0.90 oz. of zinc per square foot of surface area (total both sides).	
Medium	ZMAX G185	Galvanized (G185) 1.85 oz. of zinc per square foot of surface area (hot-dip galvanized per ASTM A653) total for both sides. Products with a powder-coat finish over a ZMAX® base have the same level of corrosion resistance.	Hot-Dip Galvanized, Mechanically Galvanized, or Double-Barrier Coating ** Bright fasteners may be used with ZMAX or HDG connectors where low corrosion resistance is allowed.*
	HDG HOT DIP GALVANIZED®	Products are hot-dip galvanized after fabrication (14 ga. and thicker). The coating weight increases with material thickness. The minimum average coating weight is 2.0 oz./ft.^{2} (per ASTM A123) total for both sides. Anchor bolts are hot-dip galvanized per ASTM F2329.	
High/Severe	316 Stainless Steel — **Type 316 Stainless Steel**	Type 316 stainless steel is a nickel-chromium austenitic grade of stainless steel with 2–3% molybdenum. Type 316 stainless steel is not hardened by heat treatment and is inherently nonmagnetic. It provides a level of corrosion protection suitable for severe environments, especially environments with chlorides.	Type 316 Stainless Steel

Dry Service

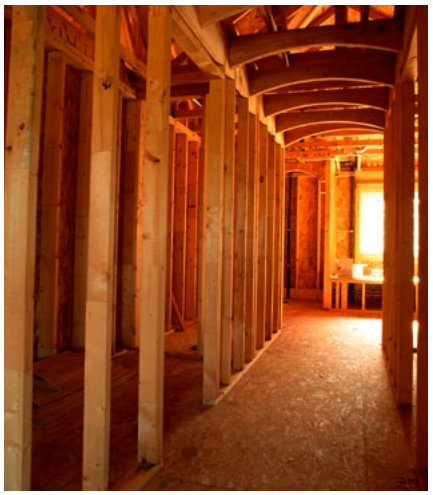

Wet Service

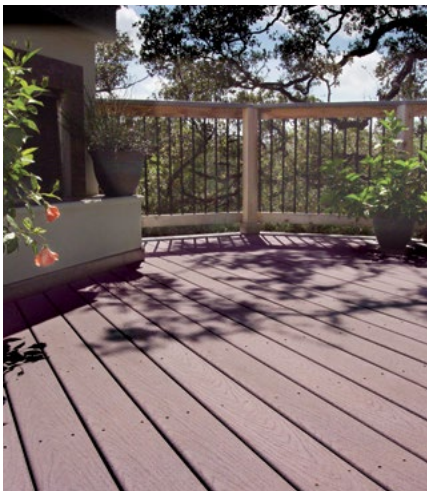

Elevated Service / Severe

C-C-2021 ©2021 SIMPSON STRONG-TIE COMPANY INC.

Guidelines for Selecting Materials and Coatings (cont.)

Step 3 — Match Your Corrosion Resistance Classification to the Coatings and Materials Available (cont.)

Not all products are available in all finishes. Contact Simpson Strong-Tie for product availability, ordering information and lead times.

Coatings and Materials Available for Fasteners

Level of Corrosion Resistance	Coating or Material	Description	
		Fasteners	**Applicable Products**
Low	**Bright**	No surface coating.	Nails
	Electrocoating (E-Coat™)	Electrocoating utilizes electrical current to deposit the coating material on the fastener. After application, the coating is cured in an oven. Electrocoating provides a minimum amount of corrosion protection and is recommended for dry, low-corrosive applications.	Strong-Drive® SDWF, SDW and SDWV Screws
	Clear and Bright Zinc, ASTM F1941	Zinc coatings applied by electrogalvanizing processes to fasteners that are used in dry service and with no environmental or material corrosion hazard.	SD8 Wafer Head Screw
Medium	**Zinc Plating with Baked-On Ceramic Coating**	A baked ceramic barrier coating applied over top of electroplated zinc provides increased protection in mildly corrosive environments.	Titen Turbo™ Concrete and Masonry Screw
	HOT DIP HDG GALVANIZED® **ASTM A153, Class D**	Hot-dip galvanized fasteners ⅜" and smaller in diameter in accordance with ASTM A153, Class D. Hot-dip galvanized fasteners are compliant with the 2015, 2018 and 2021 IRC and IBC.	Strong-Drive SCN CONNECTOR Nail
	Type 410 Stainless Steel with Protective Top Coat	Carbon martensitic grade of stainless steel that is inherently magnetic, with an added protective top coat. This material can be used in mild atmospheres and many mild chemical environments.	Titen Stainless-Steel Concrete and Masonry Screw
	Mechanically Galvanized Coating, ASTM B695, Class 55	Simpson Strong-Tie® Strong-Drive SD Connector screws are manufactured with a mechanically applied zinc coating in accordance with ASTM B695, Class 55, with a supplemental overcoat. These fasteners are compatible with painted and zinc-coated (G90 and ZMAX) connectors and are recognized in evaluation reports that can be found on **strongtie.com**.	Strong-Drive SD CONNECTOR Screw
	Double-Barrier Coating	Simpson Strong-Tie Strong-Drive SDS Heavy-Duty Connector screws and Outdoor Accents® structural wood screws are manufactured with double-barrier coating that provides a level of corrosion protection equaling that provided by HDG coating and are recognized in evaluation reports that can be found on **strongtie.com**.	Strong-Drive SDS HEAVY-DUTY CONNECTOR Screw Outdoor Accents Connector Screw and Structural Wood Screw
High/Severe	HOT DIP HDG GALVANIZED® **ASTM A153, Class C**	Simpson Strong-Tie Strong-Drive Timber-Hex screws are hot-dip galvanized in accordance with ASTM A153, Class C. These hot-dip galvanized fasteners have a minimum average of 1.25 oz./ft.^{2} of zinc coating and are compliant with the 2015, 2018 and 2021 IRC (R317.3) and IBC.	Strong-Drive TIMBER-HEX HDG Screw
	316 Stainless Steel **Type 316 Stainless Steel**	Type 316 stainless steel is a nickel-chromium austenitic grade of stainless steel with 2-3% molybdenum. It provides a level of corrosion protection suitable for severe environments, especially environments with chlorides. Type 316 stainless-steel fasteners are compliant with the 2015, 2018 and 2021 IRC and IBC.	Strong-Drive SCNR CONNECTOR Nail Strong-Drive SDS HEAVY-DUTY CONNECTOR Screw Strong-Drive SD CONNECTOR SS Screw Strong-Drive SDWS TIMBER SS Screw

C-C-2021 ©2021 SIMPSON STRONG-TIE COMPANY INC.

Important Information and General Notes

Warning

Simpson Strong-Tie Company Inc. structural connectors, anchors, and other products are designed and tested to provide specified design loads. To obtain optimal performance from Simpson Strong-Tie products and achieve maximal allowable design load, the products must be properly installed and used in accordance with the corrosion information, installation instructions and design limits provided by Simpson Strong-Tie. To ensure proper installation and use, designers and installers must carefully read the following General Notes, General Instructions for the Installer, General Instructions for the Designer and Corrosion Information, as well as consult the applicable catalog pages for specific product installation instructions and notes.

Proper product installation requires careful attention to all notes and instructions, including these basic rules:

1. Be familiar with the application and correct use of the connector.
2. Read and follow all instructions and warnings on our website, in this and any other applicable catalog, in the *Installer's Pocket Guide* and all other Simpson Strong-Tie publications. If any instructions or warnings are unclear, do not use the product and contact Simpson Strong-Tie.
3. Install all required fasteners per installation instructions provided by Simpson Strong-Tie: (a) use proper fastener type; (b) use proper fastener quantity; (c) fill all fastener holes; (d) do not overdrive or underdrive nails, including when using powder nailers; and (e) ensure screws are completely driven.
4. Only bend products that are specifically designed to be bent. For those products that require bending (such as strap-type holdowns, straight-end twist straps, etc.), do not bend more than one full cycle.
5. Cut joists to the correct length, do not "short-cut." The gap between the end of the joist and the header material should be no greater than ⅛" unless otherwise noted.
6. Wear head, skin, eye and ear protection when installing the products or visiting a jobsite.

Failure to follow fully all of the notes and instructions provided by Simpson Strong-Tie may result in improper installation of products. Improperly installed products may not perform to the specifications set forth in this catalog and may reduce a structure's ability to resist the movement, stress, and loading that occurs from gravity loads as well as impact events such as earthquakes and high-velocity winds.

Simpson Strong-Tie provides no warranty for any products that have been modified, improperly installed or not used in accordance with the information set forth in this catalog or on our website.

Important Information

In addition to following the basic rules provided above as well as all notes, warnings and instructions provided in the catalog, installers, designers, engineers and consumers must consult the Simpson Strong-Tie website at **strongtie.com** each time a product is used to obtain additional design and installation information.

Simpson Strong-Tie Limited Warranty

For the Limited Warranty that applies to Simpson Strong-Tie products, please consult **strongtie.com/limited-warranties**. See p. 355 for the Limited Warranty in effect when this catalog was first published. To obtain a copy of the current Limited Warranty, contact us at **limited_warranty@strongtie.com**, (800) 999-5099 or Simpson Strong-Tie Company Inc., 5956 West Las Positas Boulevard, Pleasanton, CA 94588.

The Limited Warranty contains important disclaimers, limitations and exclusions, and applies only if the products have been properly specified, installed, maintained, and used in accordance with the design limits and the structural, technical, and environmental specifications in the Simpson Strong-Tie Documentation. All future purchases of Simpson Strong-Tie products are subject to the terms of the Limited Warranty in effect as of the purchase date.

Although products are designed for a wide variety of uses, Simpson Strong-Tie assumes no liability for confirming that any product is appropriate for an intended use, and each intended use of a product must be reviewed and approved by qualified professionals. Each product is designed for the load capacities and uses listed in the Simpson Strong-Tie Documentation, subject to the limitations and other information set forth therein. Due to the particular characteristics of potential impact events such as earthquakes and high velocity winds, the specific design and location of the structure, the building materials used, the quality of construction, or the condition of the soils or substrates involved, damage may nonetheless result to a structure and its contents even if the loads resulting from the impact event do not exceed Simpson Strong-Tie's specifications and the products are properly installed in accordance with applicable building codes, laws, rules and regulations.

Terms and Conditions of Sale

Product Use

Products in this catalog are designed and manufactured for the specific purposes shown, and should not be used with other connectors not approved by a qualified licensed/certified building design professional, a licensed professional engineer or licensed architect ("designer"). You should review our website and consult a qualified designer familiar with all applicable building codes each time you use a Simpson Strong-Tie product.

Indemnity

Any designer or other person who modifies any products, changes any installation procedures or designs any non-catalog products for fabrication by Simpson Strong-Tie Company Inc. shall, regardless of specific instructions to the user, indemnify, defend, and hold harmless Simpson Strong-Tie Company Inc. for any and all claimed loss or damage occasioned in whole or in part by such products.

Non-Catalog and Modified Products

Modifications to products or changes in installation procedures should only be made by a qualified professional designer. The performance of such modified products or altered installation procedures is the sole responsibility of the designer. Any person modifying Simpson Strong-Tie products must provide the installer with specific instructions on the modified products' specifications, installation and use.

Consult Simpson Strong-Tie Company Inc. for applications for which there is no catalog product, or for connectors for use in hostile environments, with excessive wood shrinkage, or with abnormal loading or erection requirements.

Non-catalog products must be designed by a qualified designer and will be fabricated by Simpson Strong-Tie in accordance with customer specifications.

Any modified, special order or non-catalog products, or any products that are not installed strictly in accordance with Simpson Strong-Tie installation procedures, are provided "AS IS" and without any representation or warranty of any kind.

C-C-2021 ©2021 SIMPSON STRONG-TIE COMPANY INC.

General Notes

These general notes are provided to ensure proper installation of Simpson Strong-Tie products and must be followed fully.

a. Simpson Strong-Tie reserves the right to change specifications, designs and models without notice or liability for such changes. Review our website each time you use our products.

b. Steel used for each Simpson Strong-Tie® product is individually selected based on the product's steel specifications, including strength, thickness, formability, finish and weldability. Contact Simpson Strong-Tie for steel information on specific products.

c. Unless otherwise noted, dimensions are in inches, loads are in pounds.

d. Unless otherwise noted, welds, screws, bolts and nails may not be combined to achieve highest load value. 0.131" x 2½", 0.148" x 3" and 0.162" x 3½" specify common nails that meet the requirements of ASTM F1667. When a shorter nail is specified, it will be noted (for example 0.131" x 1½"). Refer to Simpson Strong-Tie Nailing Guide, NDS (National Design Specification) and ASTM F1667 (American Society of Testing and Materials) for more nail info.

e. Do not overload. Do not exceed catalog allowable loads.

f. Unless otherwise noted, allowable loads are for Douglas Fir-Larch under continuously dry conditions. Allowable loads for other species or conditions must be adjusted according to the code. This chart shows specific gravity and perpendicular-to-grain compression capacities for the different wood species:

Species	$F_{c\perp}$	Specific Gravity
Douglas fir–larch (DF)	625 psi	0.50
Southern pine (SP)	565 psi	0.55
Spruce-pine-fir (SPF)	425 psi	0.42
Spruce-pine-fir south (SPF-S)	335 psi	0.36
Hem-fir (HF)	405 psi	0.43
Glulam	650 psi	0.50
LVL (DF/SP)	750 psi	0.50
LSL ($E = 1.3 \times 10^6$)	680 psi	0.50
LSL ($E \geq 1.5 \times 10^6$)	880 psi	0.50
Parallam® PSL	625 psi	0.50
Western Cedar	425 psi	0.36

g. Simpson Strong-Tie Company Inc. will manufacture non-catalog products provided prior approval is obtained and an engineering drawing is included with the order. Steel specified on the drawings as ⅛", 3⁄16" and ¼" will be 11 ga. (0.120"), 7 ga. (0.179") and 3 ga. (0.239"), respectively. The minimum yield and tensile strengths are 33 ksi and 52 ksi, respectively.

h. All references to bolts are for structural quality through bolts (not lag screws or carriage bolts) equal to or better than ASTM Standard A307, Grade A.

i. Unless otherwise noted, bending steel in the field may cause fractures at the bend line. Fractured steel will not carry load and must be replaced.

j. A fastener that splits the wood will not take the design load. Evaluate splits to determine if the connection will perform as required. Dry wood may split more easily and should be evaluated as required. If wood tends to split, consider pre-boring holes with diameters not exceeding 0.75 of the nail diameter (2015/2018 NDS 12.1.5.3). Use a 5⁄32" bit for Strong-Drive® SDS Heavy-Duty Connector screws and a 3⁄32" bit for Strong-Drive SD9/SD10 Connector screws.

k. Wood shrinks and expands as it loses and gains moisture, particularly perpendicular to its grain. Take wood shrinkage into account when designing and installing connections. Simpson Strong-Tie manufactures products to fit common dry-lumber dimensions. If you need a connector with dimensions other than those listed in this catalog, Simpson Strong-Tie may be able to vary connector dimensions; contact Simpson Strong-Tie. The effects of wood shrinkage are increased in multiple lumber connections, such as floor-to-floor installations. This may result in the vertical rod nuts becoming loose, requiring post-installation tightening. (Reference ICC-ES ESR-2320 for information on Take Up Devices.)

l. Top-flange hangers may cause unevenness. Possible remedies should be evaluated by a professional and include using a face-mount hanger, and routering the beam or cutting the subfloor to accommodate the top flange thickness.

m. Built-up lumber (multiple plies) must be fastened together to act as one unit to resist the applied load (fastening of the members together does not include the connector fasteners). This must be determined by the designer.

n. Some model configurations may differ from those shown in this catalog. Contact Simpson Strong-Tie for details.

o. Hanger Options (Simpson Strong-Tie Hanger Options Matrix and Hanger Option General Notes pp. 94–99) — some combinations of hanger options are not available. In some cases, combinations of these options may not be installable. Horizontal loads induced by sloped joists must be resisted by other members in the structural system.

p. A qualified designer must always evaluate each connection, including carried and carrying member limitations, before specifying the product. Fill all fastener holes with fastener types specified in the tables, unless otherwise noted. Hanger configurations, height and fastener schedules may vary from the tables depending on joist size, skew and slope. See the allowable table load for the non-modified hanger, and adjust as indicated. Gauge may vary from that specified depending on the manufacturing process used. Simpson Strong-Tie will calculate the net height for a sloped seat. The customer must provide the H1 joist height before slope.

q. Truss plates shown are the responsibility of the truss designer.

r. Do not weld products listed in this catalog unless this publication specifically identifies a product as acceptable for welding, or unless specific approval for welding is provided in writing by Simpson Strong-Tie. Some steels have poor weldability and a tendency to crack when welded. Cracked steel will not carry load and must be replaced. See Simpson Strong-Tie Hanger Options Matrix and Hanger Option General Notes on pp. 94–99 for hangers that may be welded and Straps and Ties General Notes on p. 266 for straps that may be welded.

s. Unless noted otherwise, all references to standard-cut washers refer to Type A plain washers (W) conforming to the dimensions shown in ASME B18.22.1 for the appropriate rod size in accordance with 2015/2018 NDS Appendix L. Some products require SAE narrow washers (N) to fit in a tight space and are noted accordingly.

t. To achieve tabulated values for embedded concrete/masonry products, full consolidation of concrete or grout is required whether mounted to the form prior to the pour or wet set.

C-C-2021 ©2021 SIMPSON STRONG-TIE COMPANY INC.

General Instructions for the Installer

These general instructions for the installer are provided to ensure proper selection and installation of Simpson Strong-Tie Company Inc. products and must be followed carefully. These general instructions are in addition to the specific installation instructions and notes provided for each particular product, all of which should be consulted prior to and during installation of Simpson Strong-Tie Company Inc. products.

a. All specified fasteners must be installed according to the instructions in this catalog. Incorrect fastener quantity, size, placement, type, material, or finish may cause the connection to fail. Prior to using a particular fastener, please consult Connector Fastener types on pp. 21–22.

- Larger-diameter fasteners may be substituted for smaller-diameter fasteners in connectors provided the larger fastener does not cause splitting in the wood member and the connector holes are not enlarged.
- Simpson Strong-Tie Strong Drive® SD Connector screws are available for use with our connectors. They are designed to replace nails in certain products. See pp. 348–352 for information. Screws not manufactured by Simpson Strong-Tie are not supported in our products.

b. Fill all fastener holes as specified in the installation instructions for that product. Refer to p. 20 for the requirements of the various shapes of fastener hole.

c. Do not overdrive nails. Overdriven nails reduce shear capacity. See "Over-Driven Nails in Connectors and Straps" on p. 22 for additional information.

d. Products shall be installed for the use specified. Use the materials specified in the installation instructions. Substitution of or failure to use specified materials may cause the connection to fail. Do not alter installation procedures from those set forth in this catalog. See Terms and Conditions of Sale.

e. Do not add fastener holes or otherwise modify Simpson Strong-Tie Company Inc. products. The performance of modified products may be substantially weakened. Simpson Strong-Tie will not warrant or guarantee the performance of such modified products.

f. The proper use of certain products requires that the product be bent. For those products, installers must not bend the product more than one time (one full cycle).

g. Bolt holes shall be at least a minimum of 1/32" and no more than a maximum of 1/16" larger than the bolt diameter (per the 2015/2018 NDS, Section 12.1.3.2 and AISI S100, Table E3a if applicable).

h. Install all specified fasteners before loading the connection.

i. Some hardened fasteners may have premature failure if exposed to moisture. These fasteners are recommended to be used in dry interior applications.

j. Use proper safety equipment.

k. Welding galvanized steel may produce harmful fumes; follow proper welding procedures and safety precautions. Welding should be in accordance with A.W.S. (American Welding Society) standards. Unless otherwise noted Simpson Strong-Tie® connectors cannot be welded.

l. Pneumatic or power-actuated fasteners may deflect and injure the operator or others. Pneumatic nail tools may be used to install connectors, provided the correct quantity and type of nails (length and diameter) are properly installed in the nail holes. Connectors with tool embossments or tools with nail hole-locating mechanisms should be used. CSHP coiled strap works with several manufacturers' full round-head pneumatic framing tools. Visit **strongtie.com/cshp** for additional information. Follow the manufacturer's instructions and use the appropriate safety equipment. Contact Simpson Strong-Tie. Power-actuated fasteners should not be used to install connectors, unless noted otherwise. Reference pp. 163 and 165 for top-flange hanger installation with powder-actuated fasteners.

m. Joist shall bear completely on the connector seat, and the gap between the joist end and the header shall not exceed 1/8" per ICC-ES AC13, ASTM D1761 and ASTM D7147 test standards (unless specifically noted otherwise).

n. Fasteners are permitted to be installed through metal truss plates when approved by the Truss Designer in accordance with ANSI/TPI 1-2014, Section 7.5.3.4 and 8.9.2. Installation of Simpson Strong-Tie® Strong-Drive® SDS Heavy-Duty Connector screws through metal connector plates requires the plates to be pre-drilled using a maximum of a 5/32" bit. Do not drive nails through the truss plate on the opposite side of single-ply trusses which could force the plate off the truss.

o. Nuts shall be installed such that the end of the threaded rod or bolt is at least flush with the top of the nut.

p. When installing hurricane ties on the inside of the wall special considerations must be taken to prevent condensation on the inside of the completed structure in cold climates.

q. Unless otherwise noted, connectors shown in this catalog have been designed to be installed at the time the framing members are installed. Contact Simpson Strong-Tie for retrofit suitability of specific connectors including those manufactured in accordance with the hanger options section of this catalog.

C-C-2021 ©2021 SIMPSON STRONG-TIE COMPANY INC.

General Instructions for the Designer

These general instructions for the designer are provided to ensure proper selection and installation of Simpson Strong-Tie Company Inc. products and must be followed carefully. These general instructions are in addition to the specific design and installation instructions and notes provided for each particular product, all of which should be consulted prior to and during the design process.

a. The term "designer" used throughout this catalog is intended to mean a licensed/certified building design professional, a licensed professional engineer, or a licensed architect.

b. All connected members and related elements shall be designed by the designer.

c. All installations should be designed only in accordance with the allowable load values set forth in this catalog.

d. See p. 10 for allowable load information.

e. See p. 267 for connections with simultaneous loads.

f. Loads are based on the 2015/2018 NDS and AISI S100 if applicable, unless otherwise specified. Other code agencies may use different allowable loads.

g. Unless otherwise noted, loads include Load Duration, Group Action and Toe-Nail factors from the NDS as applicable. The application of additional adjustment factors shall be by the designer. Duration of load adjustments as specified by the code are as follows:
"PERMANENT" — 90% of the design load.
"FLOOR" and "DOWN" (100) — no increase for duration of load.
"SNOW" (115) — 115% of design load for two month duration of load.
"ROOF LOAD" (125) — 125% of design load for seven day duration of load.
"EARTHQUAKE / WIND" (160) — 160% of design load for earthquake/wind loading.

h. Unless otherwise noted, wood shear is not considered in the loads given; reduce allowable loads when wood shear is limiting.

i. Simpson Strong-Tie strongly recommends the following addition to construction drawings and specifications: "Simpson Strong-Tie® connectors are specifically required to meet the structural calculations of plan. Before substituting another brand, confirm load capacity based on reliable published testing data or calculations. The Engineer/Designer of Record should evaluate and give written approval for substitution prior to installation."

j. Verify that the dimensions of the supporting member are sufficient to receive the specified fasteners, and develop the top flange bearing length.

k. Some catalog illustrations show connections that could cause cross-grain tension or bending of the wood during loading if not sufficiently reinforced. In this case, mechanical reinforcement should be considered.

l. The allowable loads published in this catalog are for use when utilizing the traditional Allowable Stress Design methodology. A method for using Load and Resistance Factor Design (LRFD) for wood has been published in ASTM D5457. A method for using LRFD for cold-formed steel has also been published in the AISI S100-07. When designing with LRFD, reference lateral resistances must be used. Contact Simpson Strong-Tie for reference lateral resistances of products listed in this catalog. For more information, refer to the 2015 NDS Appendix N, which contains a conversion procedure that can be used to derive LRFD capacities.

m. For joist hangers, Simpson Strong-Tie recommends the hanger height shall be at least 60% of joist height for stability against rotation while under construction prior to sheathing install.

n. For cold-formed steel applications, as a minimum all screws must comply with Society of Automotive Engineers (SAE) Standard J78, Steel Self-Drilling/Tapping Screws, and must have a Type II coating in accordance with ASTM B 633, Electrodeposited Coatings of Zinc on Iron and Steel. Screw strength shall be calculated in accordance with AISI S100 Section E4, if applicable, or shall be based on the manufacturer's design capacity determined from testing.

o. Local and/or regional building codes may require meeting special conditions. Building codes often require special inspection of anchors installed in concrete and masonry. For compliance with these requirements, it is necessary to contact the local and/or regional building authority. Except where mandated by code, Simpson Strong-Tie products do not require special inspection.

p. Throughout the catalog there are installation drawings showing the load transfer from one element in the structure to another. Additional connections may be required to safely transfer the loads through the structure. It is the designer's responsibility to specify and detail all necessary connections to ensure that a continuous load path is provided as required by the building code.

q. Top flange hanger allowable loads are typically based on testing with solid headers. Load reductions may apply when using headers comprised of multiple plies of dimensioned lumber or SCL. See technical bulletin T-C-MPLYHEADR at **strongtie.com** for more information.

r. For connections involving members with different specific gravities, use the allowable load corresponding to the lowest specific gravity in the connection, unless noted otherwise.

C-C-2021 ©2021 SIMPSON STRONG-TIE COMPANY INC.

Conversion Charts

Metric Conversion

Imperial	Metric
1 in.	25.40 mm
1 ft.	0.3048 m
1 lb.	4.448 N
1 kip	4.448 kN
1 psi	6,895 Pa

Bolt Diameter

in.	mm
⅜	9.5
½	12.7
⅝	15.9
¾	19.1
⅞	22.2
1	25.4

If Common Rafter Roof Pitch is ... / Then Hip/Valley Rafter Roof Pitch becomes ...

Rise/Run	Slope	Rise/Run	Slope
1/12	5°	1/17	3°
2/12	10°	2/17	7°
3/12	14°	3/17	10°
4/12	18°	4/17	13°
5/12	23°	5/17	16°
6/12	27°	6/17	19°
7/12	30°	7/17	22°
8/12	34°	8/17	25°
9/12	37°	9/17	28°
10/12	40°	10/17	30°
11/12	42°	11/17	33°
12/12	45°	12/17	35°

1. Use these Roof Pitch to Hip/Valley Rafter Roof Pitch conversion tables only for hip/valley rafters that are skewed 45° right or left. All other skews will cause the slope to change from that listed.

US Standard Steel Gauge Equivalents in Nominal Dimensions

Ga.	Min. Thick. (mil)	Approximate Dimensions		Thickness of Steel Sheets (in.)		
		in.	mm	Uncoated Steel	Galvanized Steel (G90)	ZMAX® (G185)
3	229	¼	6	0.239	—	—
7	171	3/16	4.5	0.179	0.186	—
8	155	11/64	4.3	0.164	0.168	0.170
10	118	9/64	3.5	0.134	0.138	0.140
11	111	⅛	3.1	0.120	0.123	0.125
12	97	7/64	2.7	0.105	0.108	0.110
14	68	5/64	2	0.075	0.078	0.080
16	54	1/16	1.6	0.060	0.063	0.065
18	43	3/64	1.3	0.048	0.052	0.054
20	33	1/32	1	0.036	0.040	0.042
22	27	1/32	1	0.030	0.033	0.035

1. Steel thickness may vary according to industry mill standards.

Fastening Identification

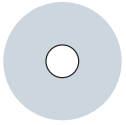

Round Holes

Purpose:
To fasten a connector.

Fill Requirements:
Always fill, unless noted otherwise.

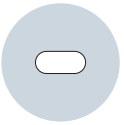

Obround Holes

Purpose:
To make fastening a connector in a tight location easier.

Fill Requirements:
Always fill, unless noted otherwise.

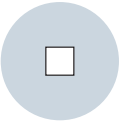

Square Holes

Purpose:
To fasten a connector.

Fill Requirements:
Always fill, unless noted otherwise.

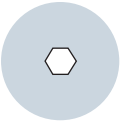

Hexagonal Holes

Purpose:
To fasten a connector to concrete or masonry.

Fill Requirements:
Always fill when fastening a connector to concrete or masonry.

Triangular Holes

Purpose:
To increase a connector's strength or to achieve max. strength.

Fill Requirements:
When the designer specifies max. nailing.

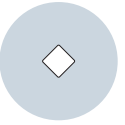

Diamond Holes

Purpose:
To temporarily fasten a connector to make installing it easier.

Fill Requirements:
None.

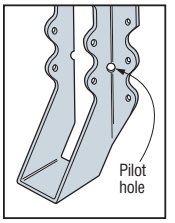

Pilot Holes

Tooling holes for manufacturing purposes. No fasteners required.

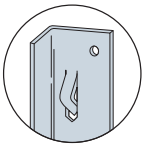

Speed Prongs

Used to temporarily position and secure the connector for easier and faster installation.

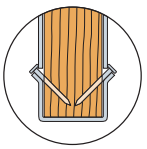

Positive Angle Nailing (PAN)

Provided when wood splitting may occur, and to speed installation.

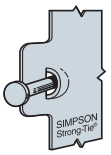

Dome Nailing

This feature guides the nail into the joist and header at a 45° angle.

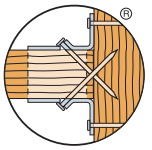

Double-Shear Nailing

The nail is installed into the joist and header, distributing the load through two points on each joist nail for greater strength. Double-shear nailing must be full-length catalog nail.

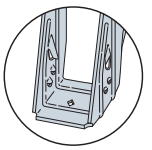

ITS/IUS Strong-Grip™

The Strong-Grip™ seat allows the I-joist to "snap" in securely without the need for joist nails.

C-C-2021 ©2021 SIMPSON STRONG-TIE COMPANY INC.

Connector Fastener Types

Many Simpson Strong-Tie connectors have been designed and tested for use with specific types and sizes of fasteners. The specified quantity, type and size of fastener must be installed in the correct holes on the connector to achieve published loads. Other factors such as fastener material and finish are also important. Incorrect fastener selection or installation can compromise connector performance and could lead to failure. For more information about fasteners, see our *Fastening Systems* catalog at **strongtie.com** or access our Fastener Finder software at **strongtie.com/software**. See pp. 345–349 for connector fastener information.

The Simpson Strong-Tie® Strong-Drive® SD Connector screw is the only screw approved for use with our connectors. See pp. 348–352 for more information.

The allowable loads of stainless-steel connectors match those of carbon-steel connectors when installed with Simpson Strong-Tie® stainless-steel, SCNR ring-shank nails. For more information, refer to engineering letter L-F-SSNAILS at **strongtie.com.**

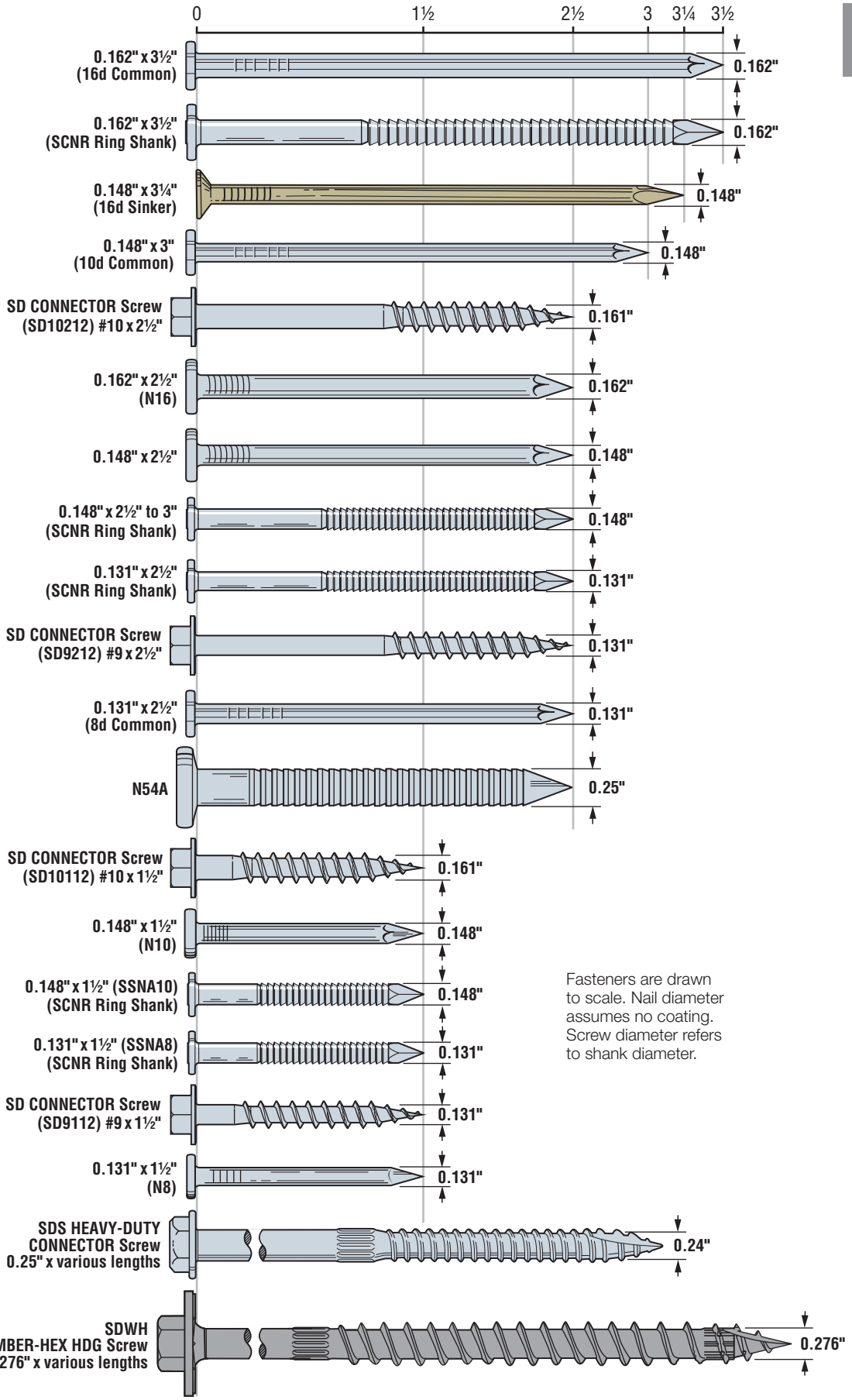

Fasteners are drawn to scale. Nail diameter assumes no coating. Screw diameter refers to shank diameter.

C-C-2021 ©2021 SIMPSON STRONG-TIE COMPANY INC.

Fastener Design Information

In some cases, it is desirable to install Simpson Strong-Tie face-mount joist hangers, post basses and caps, and straight straps and with nails that are a different type or size than what is called out in the load table. In these cases, these reduction factors must be applied to the allowable loads listed for the connector.

Load Adjustment Factors for Optional Fasteners Used with Face-Mount Hangers, Post Bases and Caps, and Straight Straps

Connector Table Fastener	Replacement Fastener	Allowable Load Adjustment Factor				
		Face-Mount Hangers			Post Bases and Caps	Straight Straps
		Straight Download/ Uplift	Double Shear			
			Uplift	Download		
0.131" x 1½"	#9 x 1½" SD Connector screw	1.00	N/A	N/A	N/A	1.00
0.131" x 2½"	0.131" x 1½"	0.85	N/A	N/A	N/A	1.00
	#9 x 1½" SD Connector screw	1.00	N/A	N/A	N/A	1.00
0.148" x 1½"	#9 x 1½" SD Connector screw	1.00	N/A	N/A	N/A	1.00
	0.131" x 1½"	0.83	N/A	N/A	N/A	0.83
0.148" x 2½" 0.148" x 3" 0.148" x 3¼"	0.131" x 1½"	0.71	0.65[10]	0.71[10]	N/A	0.83
	0.131" x 2½"	0.83	0.65	0.83	0.83	0.83
	0.148" x 1¼"	0.64	Not allowed	Not allowed	N/A	1.00[9]
	0.148" x 1½"	0.77	0.77[10]	0.77[10]	N/A	1.00[9]
	0.148" x 2½"	1.00	0.80	1.00	1.00	1.00
	0.148" x 3¼"	1.00	1.00	1.00	1.00	1.00
	#9 x 1½" SD Connector screw	1.00	See **strongtie.com**[4]		N/A	1.00
	#9 x 2½" SD Connector screw	1.00	See **strongtie.com**[4]		1.00	1.00
#9 x 2½" SD Connector screw	#9 x 1½" SD Connector screw	0.86	0.86[10]	0.86[10]	N/A	0.86
#10 x 1½" SD Connector screw	#9 x 1½" SD Connector screw	0.83	N/A	N/A	0.83	0.83
#10 x 2½" SD Connector screw	#9 x 1½" SD Connector screw	0.71	0.71[10]	0.71[10]	N/A	0.71
#10 x 2½" SD Connector screw	#9 x 2½" SD Connector screw	0.83	0.83	0.83	0.83	0.71
#10 x 2½" SD Connector screw	#10 x 1½" SD Connector screw	0.80	0.80[10]	0.80[10]	N/A	0.80
0.162" x 2½" 0.162" x 3½"	0.162" x 2½"	1.00	0.67	1.00	1.00	1.00
	0.148" x 2½"	0.84	0.67	0.84	0.84	0.84
	0.148" x 3"	0.84	0.84	0.84	0.84	0.84
	0.148" x 3¼"	0.84	0.84	0.84	0.84	0.84
	0.148" x 1½"	0.64	0.64[10]	0.64[10]	Not allowed	0.84
	#9x 1½" SD Connector screw	0.83	See **strongtie.com**[4]		N/A	0.83
	#9 x 2½" SD Connector screw	0.83	See **strongtie.com**[4]		0.83	0.83
	#10 x 1½" SD Connector screw	1.00	See **strongtie.com**[4]		N/A	1.00
	#10 x 2½" SD Connector screw	1.00	See **strongtie.com**[4]		1.00	1.00

1. Allowable load adjustment factors shown in the table are applicable to all face-mount hangers, post bases and caps, and straight straps throughout this catalog, except as noted in the footnotes below.
2. Some products have been tested specifically with alternative fasteners and have allowable load adjustment factors or reduced capacities published on the specific product page or **strongtie.com**. Values published on the product page or **strongtie.com** may be used in lieu of using this table.
3. This table does not apply to SUR/SUL/HSUR/HSUL hangers or to hangers modified per allowed options, or to connectors made from steel thicker than 10 ga.
4. Strong-Drive® SD Connector screw substitutions in this table do not apply to sloped, skewed, or double-shear hangers. Strong-Drive SD Connector screws may be used in these connectors. For additional information and specific allowable loads, refer to **strongtie.com/sd**. Where published allowable loads are for installation with #10 SD screws, multiply by 0.83 to obtain allowable loads for #9 SD screws.
5. Nails and Strong-Drive® SD Connector screws may not be combined in a connection.
6. Do not substitute 0.148" x 1½" nails for face nails in slope and skew combinations or in skewed-only LSU.
7. For straps installed over wood structural panel sheathing, use a 2½"-long fastener minimum.
8. Where noted, use 0.80 for 10 ga., 11 ga., and 12 ga. products when using SPF lumber.
9. Where noted, use 0.92 for 10 ga., 11 ga., and 12 ga. products when using SPF lumber.
10. Where noted, 1½"-long fasteners may be substituted for the specified fastener into the header only; double-shear fasteners shall be minimum 2½" long.

For LUS, MUS, HUS, LRU, HHUS and HGUS Hangers

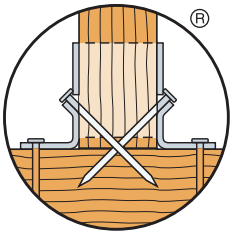

Double-shear nailing shall use minimum 2½"-long nails or 2½"-long SD screws

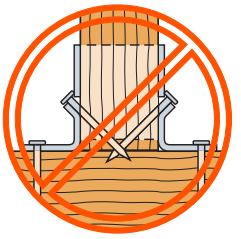

Shorter fasteners may not be used as double-shear nails

Over-Driven Nails in Connectors and Straps

A nail that is installed such that the head deforms the steel of the connector or strap is considered over-driven. Extra care to prevent over-driven nails should be taken when installing power-driven nails. Simpson Strong-Tie has evaluated the effect of over-driven nails in connectors and straps. No load reductions for connectors or straps apply as a result of over-driven nails if all of the following conditions are met:

- Connectors and straps are 14-, 16-, or 18-gauge steel.
- The top of the nail head is not driven past flush with the face of the metal hardware.
- The nail goes through an existing fastener hole without enlarging it.
- The steel around the hole is not torn or damaged other than denting caused by the nail head.

C-C-2021 ©2021 SIMPSON STRONG-TIE COMPANY INC.

Sill Plate Anchoring Solutions

Simpson Strong-Tie offers many anchorage solutions for sill plate applications in concrete or concrete block foundations. Cast-in-place structural connectors offer a time-saving alternative to anchor bolts, and provide installers with more flexibility on the jobsite. Our post-installed connectors are often used in retrofit/expansion applications or when cast-in place anchors are omitted or mis-located. All of these connectors have been evaluated and are acceptable alternates to the code-specified anchor bolts. Powder-actuated pins are acceptable alternates to code-specified anchor bolts for temporary placement of exterior sill plates and for permanent attachment of interior sill plates.

Various product finishes are available to address most environmental or preservative-treated wood conditions. For more information on product performance, installation requirements, corrosion and appropriate code listings for Simpson Strong-Tie products, please visit **strongtie.com**. For a complete listing of code-compliant sill plate anchorage solutions, see technical bulletin T-A-SILPLANCH on our website.

Concrete Products

Adhesive

- SET-3G™
- AT-XP®
- SET-XP®
- ET-HP®

Mechanical

- Titen HD®
- Strong-Bolt® 2
- Wedge-All®

Gas/Powder-Actuated Pins

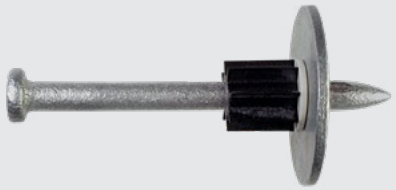

Structural Connectors

Cast-in-Place

- MASA
- LMA
- MAB
- MASB

Post-Installed Connectors

- URFP
- FRFP

Bearing Plates

- BP
- BPS
- LBPS

C-C-2021 ©2021 SIMPSON STRONG-TIE COMPANY INC.

URFP/FRFP

Retrofit Foundation Plates

Ideal where there is minimum vertical clearance, the URFP universal retrofit foundation plate provides a retrofit method to secure the mudsill to the foundation. This design allows installation flexibility when the mudsill is offset or inset from the foundation edge. With its combination of longitudinal embossments, stiffening darts and scalloped slotted holes, the URFP allows for a one-for-one replacement of ½" or ⅝" mudsill anchors as well as fixity to both the SDS screws and required concrete anchorage.

The FRFP flat retrofit foundation plate connects the mudsill to the foundation and provides lateral load resistance. This design allows the designer to maintain prescriptive requirements when filling three holes, or as an alternate, fill the two optional triangle holes and designers can utilize increased loads and greater allowable spacing.

Material: URFP — 14 gauge; FRFP — 8 gauge

Finish: Galvanized. May be ordered HDG; contact Simpson Strong-Tie. See Corrosion Information, pp. 12–15.

Installation:

- Use all specified fasteners; see General Notes.
- Install URFP using ¼" x 3" Strong-Drive® SDS Heavy-Duty Connector screws, which are supplied with the URFP.
- For URFP, alternate lag screws will not achieve published loads.
- FRFP shall use a minimum Strong-Drive SDS Heavy-Duty Connector screw length of 2½" plus the shim thickness. Follow code requirements for predrilling. Fasteners are sold separately.
- For additional retrofit information, see **strongtie.com**.

Codes: See p. 11 for Code Reference Key Chart

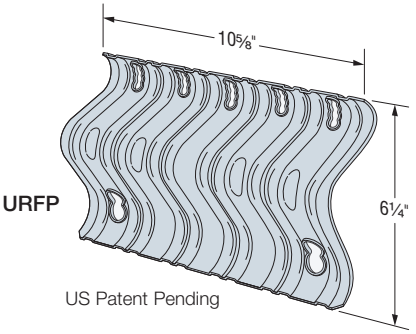

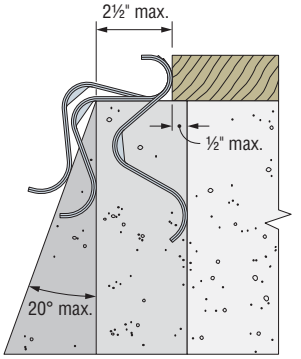

Typical URFP Installation for Three Foundation Types (End View)

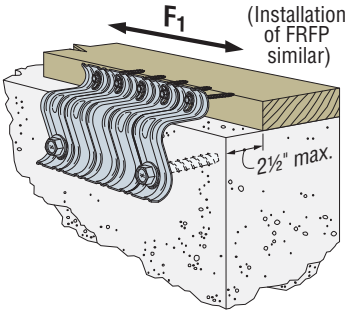

URFP Installed on a Straight Foundation with ½" Offset Mudsill

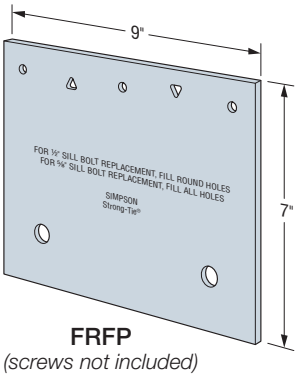

FRFP
(screws not included)

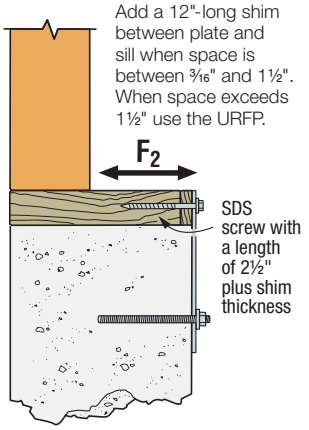

Typical FRFP Installation Foundation to Mudsill

These products are available with additional corrosion protection. For more information, see p. 14.

Model No.	Fasteners			Allowable Loads DF/SP (160)		Code Ref.
	Anchor Bolt		Sill Plate			
	Qty.	Dia.		F_1	F_2	
URFP	2	½	(5) ¼" x 3" SDS	1,530	—	IBC, FL, LA
FRFP	2	½	(3) ¼" x 2½" SDS + shim thickness	1,065	320	
	2	½	(5) ¼" x 2½" SDS + shim thickness	1,810	320	

1. Allowable loads have been increased for wind or earthquake loading with no further increase allowed. Reduce where other loads govern.
2. Each anchor bolt requires a standard-cut washer. The Simpson Strong-Tie® Titen HD® heavy-duty screw anchor does not require a washer.
3. Nominal embedment depth for post-installed anchors into concrete must be 4" for SET-3G or AT-XP, or use THD50400H Titen HD® screw anchors. Anchorage into CMU is per designer.
4. For redwood mudsills, reduce F_1 on FRFP to 820 lb. (1,395 lb. for five screws) and on URFP to 1,180 lb.
5. For installation on SPF/HF sill plates, use 0.86 x DF/SP allowable load.

Prescriptive Spacing for URFP and FRFP to Replace Sill Anchor Bolts

Number of Building Stories	Anchor Bolt Size	Anchor Bolt Spacing	Retrofit Foundation Anchor Model		
			URFP	FRFP with Three Fasteners	FRFP with Five Fasteners
One story	½" dia.	6' o.c.	6'	6'	6'
	⅝" dia.	6' o.c.	6'	4'–3"	6'
Two stories	½" dia.	4' o.c.	4'	4'	4'
	⅝" dia.	6' o.c.	6'	4'–3"	6'
Three stories	⅝" dia.	4' o.c.	4'	2'–10"	4'

1. "Prescriptive" denotes spacing requirements per the IEBC and designs per the IRC and conventional provisions of the IBC.
2. For design in accordance with the IEBC Chapter A3, the URFP may be used as a one-for-one replacement for the alternative connections shown in Figures A3-4A, A3-4B, and A3-4C.
3. Spacing is based on the parallel-to-plate load direction.
4. ⅝" anchor bolt required for Seismic Design Category E.

C-C-2021 ©2021 SIMPSON STRONG-TIE COMPANY INC.

FJA/FSA

Foundation Anchors

The FJA foundation joist anchor nails or bolts directly into floor joists, providing a direct connection between the foundation and joist to resist uplift and lateral forces.

The FSA foundation stud anchor nails or bolts to floor joists, or nails to the stud. Plywood sheathing may require notching with stud-to-foundation installation.

Material: 12 gauge

Finish: Galvanized. May be ordered HDG; contact Simpson Strong-Tie. See Corrosion Information, pp. 12–15.

Installation:

- Use all specified fasteners; see General Notes.
- FJA and FSA may be bent along bend line up to 20° to accommodate installation. Bend one time only.

Codes: See p. 11 for Code Reference Key Chart

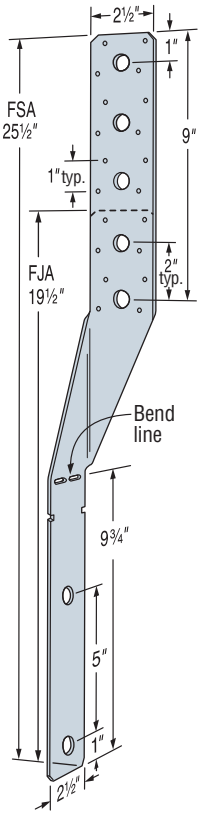

FJA/FSA

These products are available with additional corrosion protection. For more information, see p. 14.

Model No.	Fasteners			Allowable Loads DF/SP			Code Ref.
	Anchor Bolt		Stud / Joist / Plate	(160)			
	Qty.	Dia.		Uplift	F_1	F_2	
FJA	2	½"	(8) 0.148 x 1½	1,250	205	55	IBC, FL, LA
			(2) ½" MB	710	205	55	
FSA	2	½"	(8) 0.148 x 1½	1,250	—	—	
			(2) ½" MB	710	—	—	

1. Allowable loads have been increased for wind or earthquake loading with no further increase allowed. Reduce where other loads govern.
2. Spacing to be specified by the designer.
3. For additional retrofit information, see flier F-SEISRETRGD at **strongtie.com**.
4. **Fasteners:** Nail dimensions are listed diameter by length. See pp. 21–22 for fastener information.

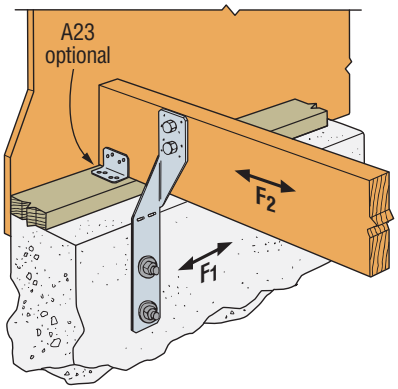

Typical FJA Installation
Foundation to Joist

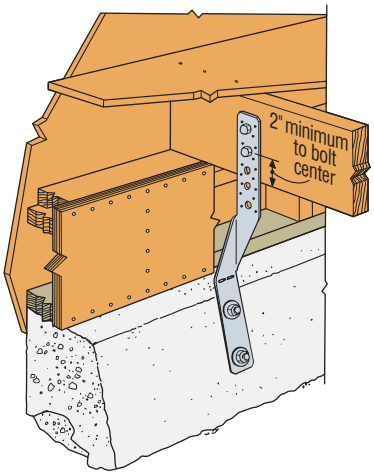

Typical FSA Installation
Foundation to Joist

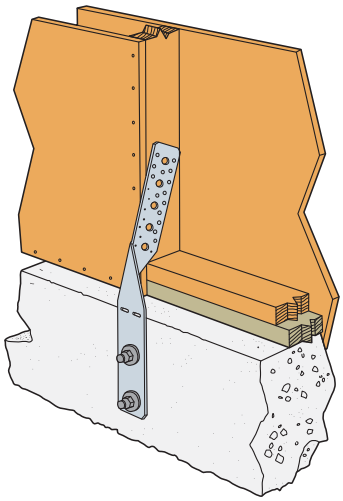

Typical FSA Installation
Foundation to Stud

C-C-2021 ©2021 SIMPSON STRONG-TIE COMPANY INC.

FWANZ

Foundation Wall Angles

The FWANZ foundation anchor connects the foundation or basement wall to the floor system to resist out-of-plane forces imposed by soil pressure. The foundation wall angle fastens to the mudsill with nails, relying on other anchorage (by designer) to anchor the sill plate to the foundation.

Special Features:

- Compatible with solid sawn joists, I-joists and floor trusses
- Testing performed on most common rim materials and types
- Addresses design needs set forth in Section 1610.1 in the 2015/2018/2021 IBC and Section R404.1 in the 2015/2018/2021 IRC
- Eliminates the need of costly cantilevered foundation designs

Material: 14 gauge

Finish: ZMAX® coating; See Corrosion Information, pp. 12–15

Installation:

- Use all specified fasteners; see General Notes.
- Connector must be fastened directly to the outside face of the rim board with (5) 0.148" x 1½" long nails.
- Connector must be located within 4" of adjacent joist/blocking for floor joist spacing up to 48" o.c. and may be centered between joists/blocking for 16" o.c. floor joist spacing.
- When floor joists are parallel to the rim board, full depth blocking shall be used in the first two bays of the floor per 2012/2015/2018/2021 IRC Section R404.1.
- Splice joint not permitted on rim board in same bay unless blocking is placed on both sides of the splice.
- When I-joist rim material is used, backer blocks must be used. Installed per manufacturer's recommendations.

Codes: See p. 11 for Code Reference Key Chart; refer to IBC 1610.1

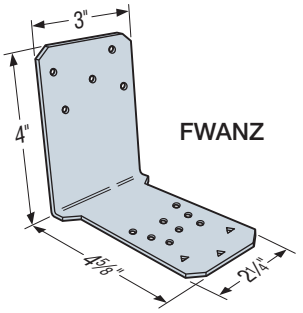

FWANZ

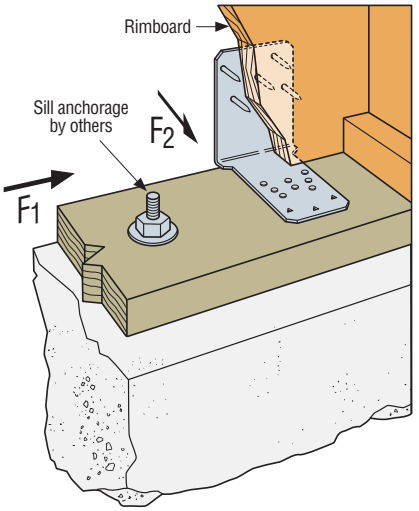

Typical FWANZ Installation

These products are available with additional corrosion protection. For more information, see p. 14.

Model No.	Sill Plate	Fastener (in.) (Quantity) Type		Rim Board Material	Allowable F_2 Load (DF/SP Sill Plate)			Allowable F_2 Load (HF Sill Plate)			Code Ref.
		Sill Plate	Rim Board		(90)	(100)	(160)	(90)	(100)	(160)	
FWANZ	2x4, (2) 2x4, 3x4, 4x4	(8) 0.148 x 1½	(5) 0.148 x 1½	1" OSB rim	750	750	750	750	750	750	IBC, FL, LA
				1⅛" OSB rim	815	815	815	815	815	815	
				1¾" I-joist rim	940	1,045	1,070	815	905	1,070	
				1¼" LSL rim	940	1,045	1,105	815	905	1,105	
				2x rim	940	1,045	1,390	815	905	1,345	
				1¾" LVL rim	940	1,045	1,245	815	905	1,245	
	2x6, (2) 2x6, 3x6, 4x6	(11) 0.148 x 1½	(5) 0.148 x 1½	1" OSB rim	750	750	750	750	750	750	
				1⅛" OSB rim	935	935	935	935	935	935	
				1¾" I-joist rim	955	955	955	955	955	955	
				1¼" LSL rim	1,025	1,025	1,025	1,025	1,025	1,025	
				2x rim	1,295	1,440	1,445	1,120	1,245	1,445	
				1¾" LVL rim	1,295	1,385	1,385	1,120	1,245	1,385	

1. FWANZ may be used to transfer F_1 loads up to 260 lb. No further increase in load permitted.
2. For simultaneous loads in more than one direction, the connector must be evaluated using the Unity Equation, as described in General Instructions for the Designer on p. 19.
3. Designer shall evaluate rim board and sill plate design based on demand load.
4. FWANZ spacing and sill plate anchorage are to be specified by the designer.
5. When floor joists are parallel to the rim board, designer must ensure proper load transfer from the rim board into the diaphragm.
6. Values are based on a load duration factor of C_D = 0.90.
7. **Fasteners:** Nail dimensions are listed diameter by length. See pp. 21–22 for fastener information.

C-C-2021 ©2021 SIMPSON STRONG-TIE COMPANY INC.

Wedge Form Tie

The wedge tie (WT) is a form tie that secures concrete forms in place while the concrete is poured. It easily installs between form boards and accurately spaces the forms. Several models are available for varying wall thickness and types of form boards.

Designed for low foundation wall applications. ⅝"-wide formed "V" design for rigidity allows accurate form spacing and support. Sizes now available for composite form board.

Material: W1 — 14 gauge; WT — 18 gauge

Finish: Galvanized

Installation:

- Two W1 wedges are required for each wedge tie
- Not recommended for wall pours greater than 4' high
- Wall thickness from 6" to 12"

Order wedges separately. Specify W1.

The spacing of the WTs along the length of the form depends on the depth of the WT in the form. The spacing does not depend on the thickness of the wall. The maximum recommended spacing for WTs used with 1x, 2x and 1¼" thick forms is outlined in the tables below. The tables give spacing guidelines for various form heights and types of form boards. In general, the higher the form is, the closer the spacing of the WTs should be.

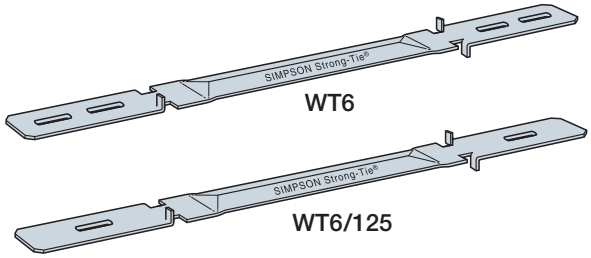

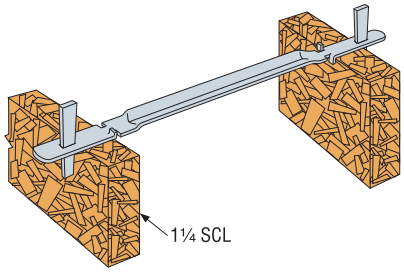

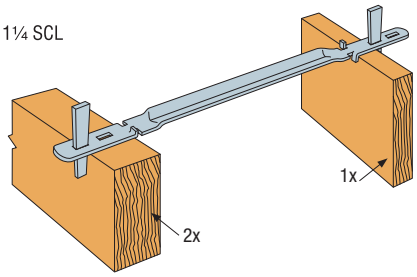

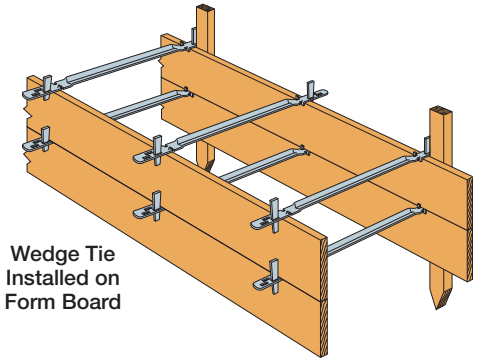

For Solid Sawn

Location (see Fig. 1)	Depth of Form (in.)	1x6 Spacing (in.)	2x6 Spacing (in.)	Depth of Form (in.)	1x8 Spacing (in.)	2x8 Spacing (in.)
Top of Form	0	27	46	0	25	43
1	5.5	27	46	7.25	25	43
2	11	23	38	14.5	21	36
3	16.5	22	35	21.75	19	32
4	22	19	32	29	18	30
5	27.5	18	31	36.25	17	29
6	33	17	29	43.5	15	26
7	38.5	16	28	—	—	—
8	44	15	27	—	—	—

1. Note: Form board design by others.

For Solid Sawn

Location (see Fig. 1)	Depth of Form (in.)	1x10 Spacing (in.)	2x10 Spacing (in.)	Depth of Form (in.)	1x12 Spacing (in.)	2x12 Spacing (in.)
Top of Form	0	24	40	0	23	38
1	9.25	24	40	11.25	23	38
2	18.5	20	34	22.5	19	32
3	27.75	18	31	33.75	17	22
4	37	17	24	45	15	16
5	46.25	15	19	—	—	—

1. Note: Form board design by others.

Figure 1 — Spacing Locations
(side view)

For SCL

Location (see Fig. 1)	Depth of Form (in.)	1¼" x 9½" Spacing (in.)	Depth of Form (in.)	1¼" x 11⅞" Spacing (in.)	Depth of Form (in.)	1¼" x 14" Spacing (in.)	Depth of Form (in.)	1¼" x 16" Spacing (in.)
Top of Form	0	34	0	32	0	30	0	29
1	9.25	34	11.875	32	14	30	16	29
2	19	28	23.75	27	28	21	32	16
3	28.5	26	35.625	20	42	14	48	11
4	38	23	47.5	15	—	—	—	—
5	47.5	18	—	—	—	—	—	—

1. Note: Form board design by others.

Model No.		Wall Thickness (in.)
Solid Sawn	SCL	
WT6	WT6/125	6
WT8	WT8/125	8
WT10	—	10
WT12	—	12

1. Note: Form board design by others.
2. Order two W1 wedges for each WT wedge tie.

C-C-2021 ©2021 SIMPSON STRONG-TIE COMPANY INC.

MASA/MASAP

Mudsill Anchors

This product is preferable to similar connectors because of (a) easier installation, (b) higher loads, (c) lower installed cost, or a combination of these features.

Mudsill anchors have always been a time-saving alternative to anchor bolts, and the MASA anchors provide a great alternative for ⅝" and ½" mudsill anchor bolts on 2x, double-2x and 3x mudsills. It also eliminates the need for 3" square plate washers for seismic design and, in some cases, has allowable loads that meet or exceed the parallel- and perpendicular-to-plate shear loads of other cast-in-place anchors. Two versions of the MASA are available — the standard MASA for installation on standard forms and the MASAP for panelized forms.

The MASA and MASAP are code listed by ICC-ES under the 2012, 2015, 2018 and 2021 IBC® and IRC®.

Material: 16 gauge

Finish: Galvanized. Also available in ZMAX® coating. See Corrosion Information, pp. 12–15.

Installation:

- Use all specified fasteners; see General Notes.
- Concrete shall have a minimum f'_c = 2,500 psi.
- Spalling — Full loads apply for spalls up to a maximum height of 1¼" and a maximum depth of ⅞". Any exposed portion of the mudsill anchor must be protected against possible corrosion.
- For prescriptive anchor spacing refer to table below.
- Testing shows that these mudsill anchors can be used in lieu of code-required anchor bolts and square washer in high seismic zones.
- Minimum MASA end distance is 4" and minimum center-to-center spacing is 8" for full load. For reduced center-to-center spacing and/or end distance, see engineering letter L-C-MASASPCNG on **strongtie.com**.
- For continuous load path, MASA should be installed on the same side of wall as uplift connectors.
- For installation in severe corrosion environments, refer to **strongtie.com/cipcorrosion** for additional considerations.

Codes: See p. 11 for Code Reference Key Chart

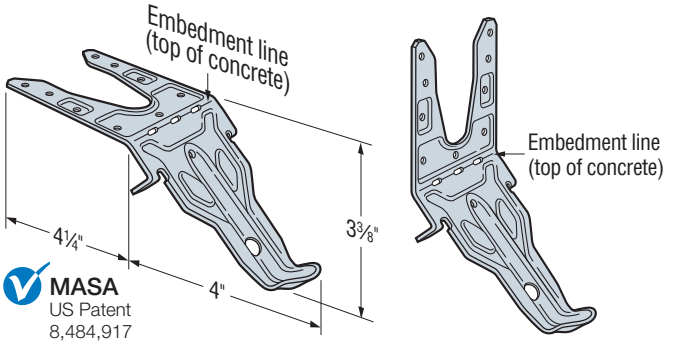

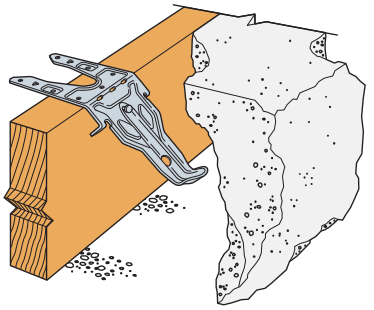

Typical MASA Installation in Concrete

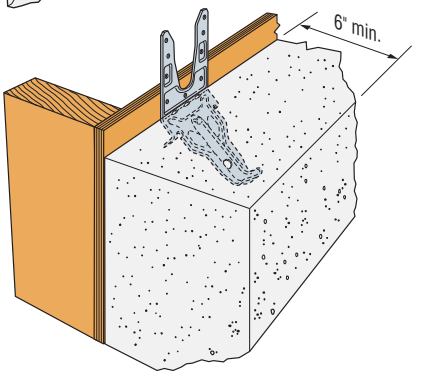

Typical MASAP Installation in Concrete

Prescriptive Spacing for MASA/MASAP to Replace Sill Anchor Bolts

Model No.	Anchor Bolt Size to Replace	Anchor Bolt Spacing to Replace	MASA/MASAP Spacing			
			DF/SP 2x Sill Plate		HF 2x Sill Plate	
			Wind and SDC A&B	SDC C–E	Wind and SDC A&B	SDC C–E
MASA MASAP	½" diameter	6' o.c.	6'–0"	6'–0"	6'–0"	6'–0"
		4' o.c.	4'–0"	4'–0"	4'–0"	4'–0"
MASA MASAP	⅝" diameter	6' o.c.	5'–4"	4'–6"	5'–1"	4'–4"
		4' o.c.	3'–6"	3'–1"	3'–5"	2'–11"

1. Detached one- and two-family dwellings in SDC C may use the "Wind and SDC A&B" spacing.
2. Spacing is based on the parallel-to-plate load direction for MASA standard installation only.
3. ⅝" anchor bolt required for Seismic Design Category E.
4. When replacing ½"-diameter sill bolts, use (7) 0.148" x 1½" nails for standard installation. One out of three MASA anchors (33%) may be installed in one-leg-up installation along a wall line.
5. When replacing ⅝"-diameter sill bolts, use (9) 0.148" x 1½" nails for standard installation. One out of five MASA anchors (20%) may be installed in one-leg-up installation along a wall line.
6. Per Section 1613 of the 2012/2015/2018/2021 IBC, detached one- and two-family dwellings in SDC C may use the "Wind and SDC A&B" spacing.

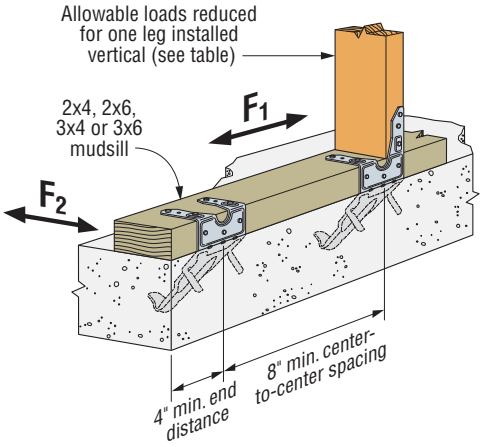

Typical MASA/MASAP Installation on Sill Plate

C-C-2021 ©2021 SIMPSON STRONG-TIE COMPANY INC.

MASA/MASAP

Mudsill Anchors (cont.)

These products are available with additional corrosion protection. For more information, see p. 14.

Model No.	Sill Size	Fasteners (in.) Sides	Fasteners (in.) Top	Allowable Loads Uncracked Wind and SDC A&B[5,6] Uplift	Uncracked Wind and SDC A&B[5,6] F_1	Uncracked Wind and SDC A&B[5,6] F_2	Uncracked SDC C–F[6] Uplift	Uncracked SDC C–F[6] F_1	Uncracked SDC C–F[6] F_2	Cracked Wind and SDC A&B[5,6] Uplift	Cracked Wind and SDC A&B[5,6] F_1	Cracked Wind and SDC A&B[5,6] F_2	Cracked SDC C–F[6] Uplift	Cracked SDC C–F[6] F_1	Cracked SDC C–F[6] F_2	Code Ref.
Standard Installation — Attached to DF/SP Sill Plate																
MASA or MASAP	2x4, x6, x8, x10	(3) 0.148 x 1½	(6) 0.148 x 1½	920	1,475	1,095	745	1,235	1,045	750	1,475	875	660	1,235	765	IBC, FL, LA
	3x4, 3x6	(5) 0.148 x 1½	(4) 0.148 x 1½	630	1,165	725	550	1,020	725	475	1,165	725	415	1,020	640	
One-Leg-Up Installation — Attached to DF/SP Sill Plate and DF/SP Stud																
MASA or MASAP	2x4, x6, x8, x10	(6) 0.148 x 1½	(3) 0.148 x 1½	755	965	995	660	845	995	570	965	930	500	845	810	IBC, FL, LA
	3x4, 3x6	(7) 0.148 x 1½	(2) 0.148 x 1½	—	760	—	—	665	—	—	760	—	—	665	—	
Two-Legs-Up Installation — Attached to DF/SP Sill Plate and Rimboard or Blocking																
MASA or MASAP	2x4, x6, x8, x10, 3x4, 3x6	(9) 0.148 x 1½	—	810	1,105	865	740	965	755	620	1,105	630	560	965	550	IBC, FL, LA
Double 2x Installation — Attached to DF/SP Sill Plates																
MASA or MASAP	Double 2x4, Double 2x6	(5) 0.148 x 1½	(2) 0.148 x 1½	840	1,030	785	735	900	785	635	1,030	785	555	900	785	IBC, FL, LA
Standard Installation — Attached to Hem-Fir Sill Plate																
MASA or MASAP	2x4, x6, x8, x10	(3) 0.148 x 1½	(6) 0.148 x 1½	790	1,250	940	640	1,060	900	650	1,250	755	570	1,060	660	—
	3x4, 3x6	(5) 0.148 x 1½	(4) 0.148 x 1½	535	1,005	625	475	875	625	410	1,005	625	355	875	550	
One-Leg-Up Installation — Attached to Hem-Fir Sill Plate and HF/SPF Stud																
MASA or MASAP	2x4, x6, x8, x10	(6) 0.148 x 1½	(3) 0.148 x 1½	650	830	855	565	725	855	490	830	795	430	725	695	—
	3x4, 3x6	(7) 0.148 x 1½	(2) 0.148 x 1½	—	670	—	—	570	—	—	670	—	—	570	—	
Two-Legs-Up Installation — Attached to Hem-Fir Sill Plate and HF/SPF Rimboard or Blocking																
MASA or MASAP	2x4, x6, x8, x10, 3x4, 3x6	(9) 0.148 x 1½	—	700	950	745	635	830	650	545	950	540	480	830	475	—
Double 2x Installation — Attached to Hem-Fir Sill Plates																
MASA or MASAP	Double 2x4, Double 2x6	(5) 0.148 x 1½	(2) 0.148 x 1½	720	890	675	630	775	675	545	890	675	475	775	675	—

1. Loads have been increased for wind or earthquake loading, with no further increase allowed. Reduce where other loads govern.
2. Concrete shall have a minimum compressive strength of f'_c = 2,500 psi.
3. Allowable loads are based on a minimum stem wall width of 6".
4. For simultaneous loads in more than one direction, the connector must be evaluated using the Unity Equation, as described in General Instructions for the Designer.
5. Per Section 1613 of the 2012/2015/2018/2021 IBC, detached one- and two-family dwellings in SDC C may use the "Wind and SDC A&B" allowable loads.
6. For designs under the 2012/2015/2018/2021 IBC, sill plate size shall comply with the shearwall requirements of the 2015/2021 Special Design Provisions for Wind and Seismic.
7. **Fasteners:** Nail dimensions are listed diameter by length. See pp. 21–22 for fastener information.

Alternative Mudsill Anchor Installations

Alternate Installation for Inside of Wall Continuity

Full catalog loads apply.

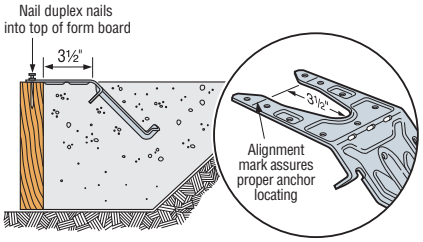

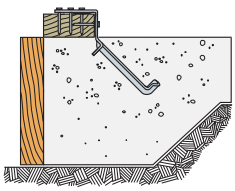

1 Step 1: Attach MASA 3½" from inside of form. After concrete cures, remove nails and bend straps up 90°.

2 Step 2: Place mudsill on concrete and nail MASA over mudsill. Not applicable to 2x6 and wider sill plates in SDC D-F.

Alternate Installation for Brick Ledges

Full catalog loads apply.

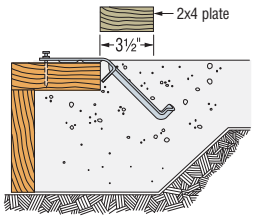

Alternate MASA Installation for Brick Ledges

Alternate Installation for Rim Board or Blocking

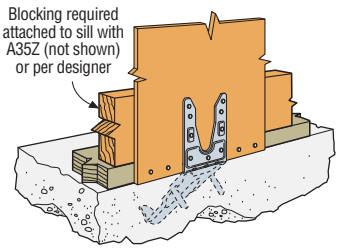

Maximum ½" Sheathing

C-C-2021 ©2021 SIMPSON STRONG-TIE COMPANY INC.

LMAZ/MAB/MASB

Mudsill Anchors

Mudsill anchors provide an alternative to anchor bolts. They easily mount on forms and make finishing easier. The unique design provides installation flexibility, eliminating problems with misplaced anchor bolts. Suitable for stemwall or slab foundations, mudsill anchors are one piece so there are no more nuts and washers to lose.

LMAZ — anchors mudsill to poured walls or slab foundations

MAB — anchors mudsill to concrete block, poured walls or slab foundations

MASB — anchors mudsill to concrete block

Material: LMAZ, MAB — 18 gauge; MASB — 16 gauge

Finish: MAB, MASB — galvanized (also available in ZMAX® coating); LMAZ — ZMAX only. See Corrosion Information, pp. 12–15.

Installation:

- Use all specified fasteners; see General Notes.
- **LMAZ/MAB:**
  - CMU shall have a minimum f'_m = 1,500 psi and concrete shall have a minimum f'_c = 2,000 psi.
  - Not for use where a horizontal cold joint exists between the slab and foundation wall or footing beneath, unless provisions are made to transfer the load.
  - Not for use in slabs poured over foundation walls formed of concrete block or with brick and 4" masonry block stemwalls.
- **MASB**
  - Fill CMU cell with concrete grout first, then place MASB into the grouted cell and adjust into position. Attach mudsill to anchor only after the concrete grout cures.
  - CMU shall have a minimum f'_m = 1,500 psi.
  - The MASB mudsill anchors were tested in standard 8" CMU.

Codes: See p. 11 for Code Reference Key Chart

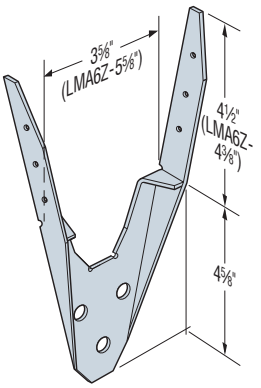

LMA4Z
(LMA6Z similar)

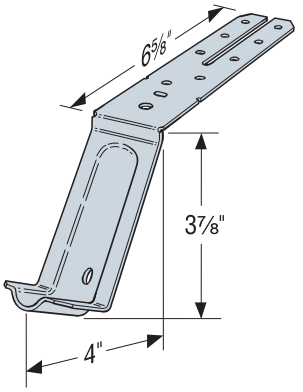

MASB

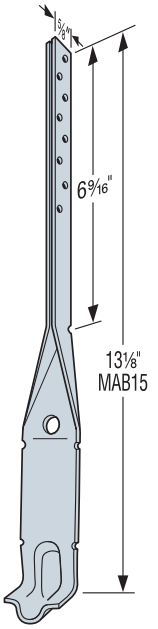

MAB

These products are available with additional corrosion protection. For more information, see p. 14.

Model No.	Sill Size	Fasteners (in.)		Allowable Loads DF/SP (160)			Code Ref.
		Sides	Top	Uplift	Parallel to Plate (F_1)	Perp. to Plate (F_2)	
MASB (Standard)	2x4, x6	(2) 0.148 x 1½	(6) 0.148 x 1½	160	860	550	IBC
MASB (One Leg Up)	2x4, x6	(5) 0.148 x 1½	(3) 0.148 x 1½	—	860	360	IBC
LMA4Z	2x4	(2) 0.148 x 1½	(4) 0.148 x 1½	905	675	555	—
	3x4	(4) 0.148 x 1½	(2) 0.148 x 1½	905	675	555	
LMA6Z	2x6	(2) 0.148 x 1½	(4) 0.148 x 1½	905	825	675	
	3x6	(4) 0.148 x 1½	(4) 0.148 x 1½	1,110	825	675	
MAB15	2x4, x6, x8, x10, x12	(2) 0.148 x 1½	(4) 0.148 x 1½	565	670	500	IBC

1. Loads have been increased for wind or earthquake loading, with no further increase allowed. Reduce where other loads govern.
2. For uplift loads, provide attachment from mudsill to building's structural components to prevent cross-grain bending.
3. LMAZ installed attached to the stud has no load reduction for parallel and perpendicular loads and an uplift of 600 lb. for LMA4 and 835 lb. for LMA6.
4. For concrete stem wall applications, allowable loads are based on a minimum concrete stem wall width of 6".
5. Uplift loads do not apply and F_1 is 500 lb. when MAB is installed on 2x8, 2x10, or 2x12 sill plates.
6. **Fasteners:** Nail dimensions are listed diameter by length. See pp. 21–22 for fastener information.

C-C-2021 ©2021 SIMPSON STRONG-TIE COMPANY INC.

Mudsill Anchors (cont.)

These products are available with additional corrosion protection. For more information, see p. 14.

Prescriptive Anchor Spacing

Model No.	O.C. Spacing to Replace ½" Anchor Bolt 6' O.C. (160)	O.C. Spacing to Replace ⅝" Anchor Bolt 6' O.C. (160)	Minimum Concrete End Distance	Minimum C–C Spacing
MASB	5'–0"	3'–5"	3¾"	7½"
LMA4Z	3'–8"	2'–7"	4⅝"	9¼"
LMA6Z	4'–6"	3'–2"		
MAB15	3'–10"	2'–8"	6½"	13"

1. "Prescriptive" denotes designs per the IRC or conventional provisions of the IBC for wind speeds 140 mph or less, or for Seismic Design Category D and less (SDC E and less in IBC).
2. Spacing is based on parallel-to-plate load direction only.
3. Place anchors not more than 12" from the end of sill and splices per code.
4. Concrete shall have a minimum compressive strength of f'_c = 2,500 psi.
5. Grout-filled CMU (GFCMU) shall have a minimum compressive strength of f'_m = 1,500 psi.
6. Spacings apply to DF, SP, and HF sill plates.

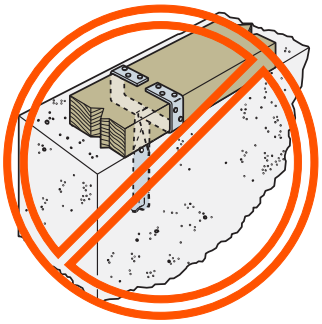

MAB Misinstallation
(MAB straps must be separated before the concrete is poured or installed through ¾"-diameter hole)

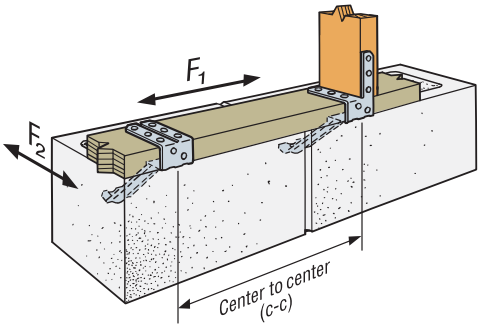

Typical MASB Installation

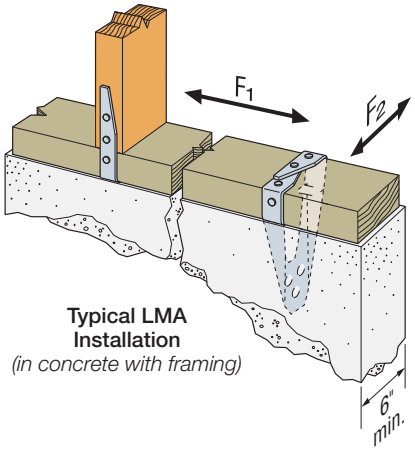

Typical LMA Installation
(in concrete with framing)

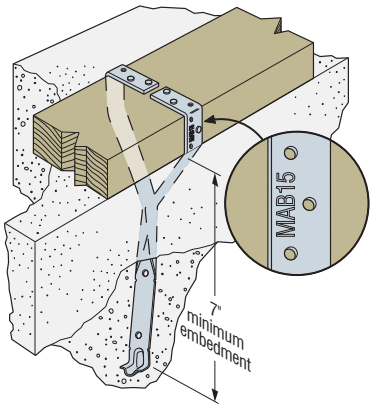

Typical MAB15 Installation in Concrete
Not applicable for concrete-block installation.

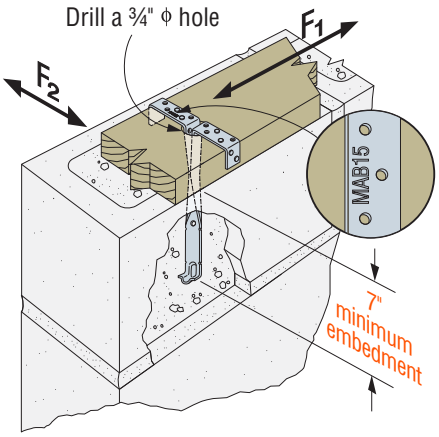

Typical MAB15 Installation in Concrete Block
Concrete installation similar.

C-C-2021 ©2021 SIMPSON STRONG-TIE COMPANY INC.

SB

Anchor Bolt

This product is preferable to similar connectors because of (a) easier installation, (b) higher loads, (c) lower installed cost, or a combination of these features.

The SB anchor bolt offers an anchorage solution for our holdowns that call for a ⅝"-diameter, a ⅞"-diameter and a 1"-diameter anchor.

SB anchor bolts are code listed by ICC-ES under the 2012/2015/2018/2021 IBC and IRC.

Features:

- Identification on the bolt head showing embedment angle and model
- Sweep geometry to optimize position in form
- Rolled thread for higher tensile capacity
- Hex nuts and plate washer fixed in position
- Available in HDG for additional corrosion resistance

Material: ASTM F1554, Grade 36

Finish: None. May be ordered HDG; contact Simpson Strong-Tie.

Installation:

- SB is only for concrete applications poured monolithically except where noted.
- Top nuts and washers for holdown attachment are not supplied with the SB; install standard nuts, couplers and/or washers as required.
- On HDG SB anchors, chase the threads to use standard nuts or couplers or use overtapped products in accordance with ASTM A563, for example Simpson Strong-Tie NUT⅝-OST, NUT⅞-OST and NUT1-OST, CNW⅝-OST, CNW⅞-OST and CNW1-OST.
- Install SB before the concrete pour using AnchorMate® anchor bolt holders. Install the SB per the plan view detail.
- Minimum concrete compressive strength is 2,500 psi.
- When rebar is required it does not need to be tied to the SB.

Codes: See p. 11 for Code Reference Key Chart

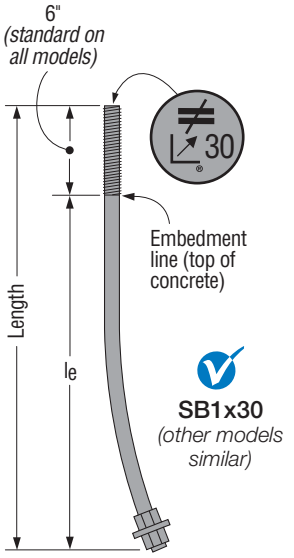

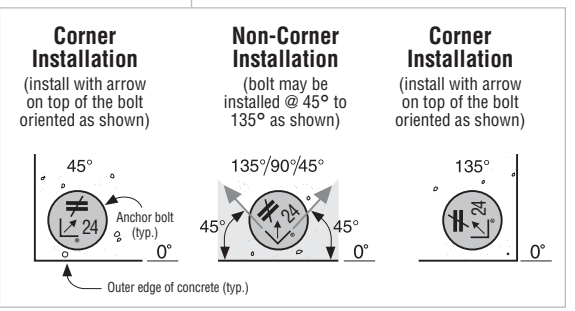

Plan View of SB Placement in Concrete

These products are available with additional corrosion protection. For more information, see p. 14.

SB Bolts at Stemwall

Model No.	Dimensions (in.)				Allowable Tension Loads						Code Ref.
	Stemwall Width	Dia.	Length	Min. Embed. (l_e)	Wind and SDC A&B			SDC C–F			
					Midwall	Corner	End Wall	Midwall	Corner	End Wall	
SB5/8X24	6	⅝	24	18	6,675	6,550	6,550	6,675	5,730	5,730	IBC, FL, LA
SB7/8X24	8	⅞	24	18	10,055	8,980	6,550	8,795	7,855	5,730	
SB1X30	8	1	30	24	13,110	9,505	6,930	11,470	8,315	6,065	

1. Rebar is required at the top of stem wall foundations, but is not required for slab-on-grade edge and garage curb, or stem wall garage front installations.
2. Minimum end distances for SB bolts are as shown in graphics.
3. To obtain LRFD values, multiply ASD seismic load values by 1.43 and wind load values by 1.67.
4. Per Section 1613 of the IBC, detached one- and two-story dwellings in SDC C may use "Wind and SDC A&B" allowable loads.
5. Midwall loads apply when anchor is 1.5 l_e or greater from the end. For bolts acting in tension simultaneously, the minimum bolt center-to-center spacing is 3 l_e.
6. Full catalog loads apply for two-pour installation for slab-on-grade: edge.

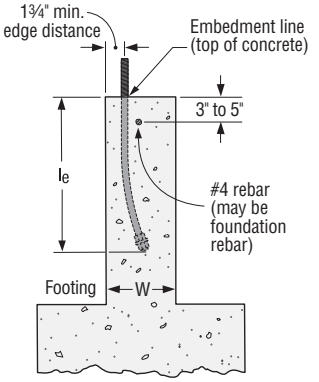

Typical SB Installation

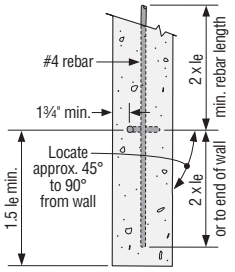

Midwall

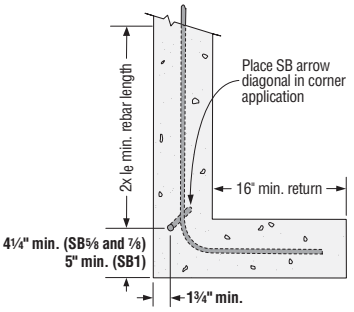

Corner

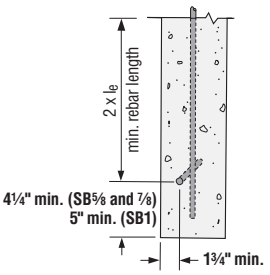

End Wall

Stemwall Plan Views

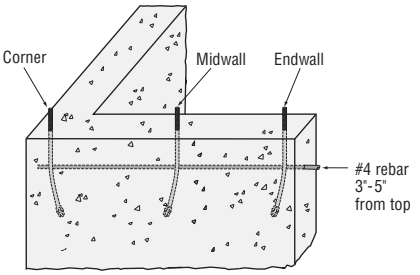

Perspective View

C-C-2021 ©2021 SIMPSON STRONG-TIE COMPANY INC.

Anchor Bolt (cont.)

These products are available with additional corrosion protection. For more information, see p. 14.

SB Bolts at Stemwall: Garage Front

Model No.	Dimensions (in.)				Allowable Tension Loads				Code Ref.
	Stemwall Width	Diameter	Length	Min. Embed. (l_e)	Wind and SDC A&B		SDC C–F		
					Step-Down End	Corner	Step-Down End	Corner	
SB7/8X24	8	⅞	24	18	6,935	7,355	6,070	6,435	IBC, FL, LA
SB1X30	8	1	30	24	10,850	9,400	9,495	8,030	

1. Rebar is required at the top of stem wall foundations, but is not required for slab-on-grade edge and garage curb, or stem wall garage front installations.
2. Minimum end distances for SB bolts are as shown in graphics.
3. To obtain LRFD values, multiply ASD seismic load values by 1.43 and wind load values by 1.67.
4. Per Section 1613 of the IBC, detached one- and two-story dwellings in SDC C may use "Wind and SDC A&B" allowable loads.
5. Midwall loads apply when anchor is 1.5 l_e or greater from the end. For bolts acting in tension simultaneously, the minimum bolt center-to-center spacing is 3 l_e.

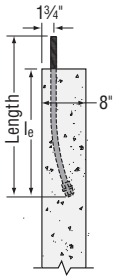

Stemwall Garage Front

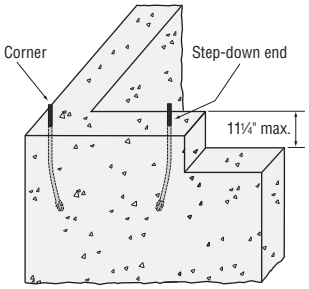

Perspective View

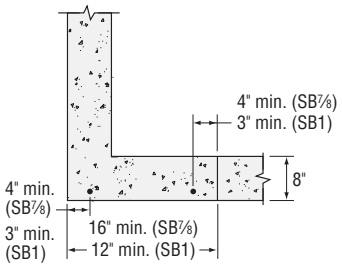

Plan View

SB Bolts at Slab on Grade: Edge

Model No.	Dimensions (in.)				Allowable Tension Loads				Code Ref.
	Footing Width	Diameter	Length	Min. Embed. (l_e)	Wind and SDC A&B		SDC C–F		
					Midwall	Corner	Midwall	Corner	
SB5/8X24	12	⅝	24	18	6,675	6,550	6,675	5,730	IBC, FL, LA
SB7/8X24	12	⅞	24	18	13,080	11,650	12,320	10,190	
SB1X30	12	1	30	24	17,080	14,960	16,300	13,090	

1. Rebar is required at the top of stem wall foundations, but is not required for slab-on-grade edge and garage curb, or stem wall garage front installations.
2. Minimum end distances for SB bolts are as shown in graphics.
3. To obtain LRFD values, multiply ASD seismic load values by 1.43 and wind load values by 1.67.
4. Per Section 1613 of the IBC, detached one- and two-story dwellings in SDC C may use "Wind and SDC A&B" allowable loads.
5. Midwall loads apply when anchor is 1.5 l_e or greater from the end. For bolts acting in tension simultaneously, the minimum bolt center-to-center spacing is 3 l_e.
6. Full catalog loads apply for two-pour installation for slab-on-grade: edge.

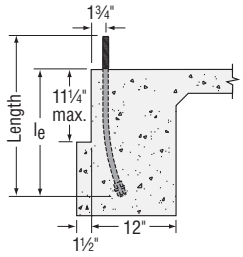

Slab Edge

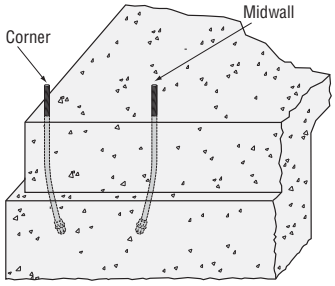

Perspective View

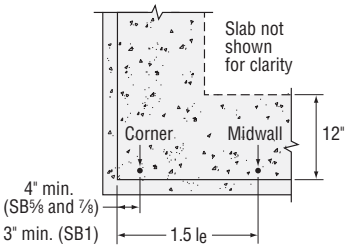

Plan View

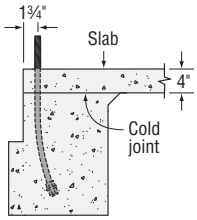

Two-Pour Installation

C-C-2021 ©2021 SIMPSON STRONG-TIE COMPANY INC.

Anchor Bolt (cont.)

These products are available with additional corrosion protection. For more information, see p. 14.

SB Bolts at Slab on Grade: Garage Curb

Model No.	Dimensions (in.)				Allowable Tension Loads				Code Ref.
	Curb Width	Diameter	Length	Min. Embed. (l_e)	Wind and SDC A&B		SDC C–F		
					Step-Down End	Corner	Step-Down End	Corner	
SB7/8X24	6	⅞	24	18	8,805	10,635	7,705	9,305	IBC, FL, LA
SB1X30	6	1	30	24	14,960	14,960	13,090	13,090	

1. Rebar is required at the top of stem wall foundations, but is not required for slab-on-grade edge and garage curb, or stem wall garage front installations.
2. Minimum end distances for SB bolts are as shown in graphics.
3. To obtain LRFD values, multiply ASD seismic load values by 1.43 and wind load values by 1.67.
4. Per Section 1613 of the IBC, detached one- and two-story dwellings in SDC C may use "Wind and SDC A&B" allowable loads.

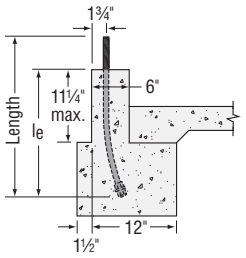

Slab Garage Curb

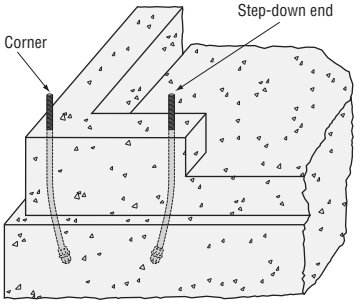

Perspective View

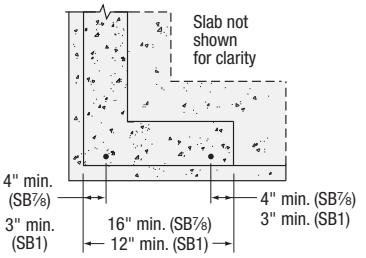

Plan View

PFD Post-to-Foundation Designer

The Post-to-Foundation Designer is a quick way to specify a holdown and the applicable anchorage to meet your project design requirements. Visit **app.strongtie.com/pfd**.

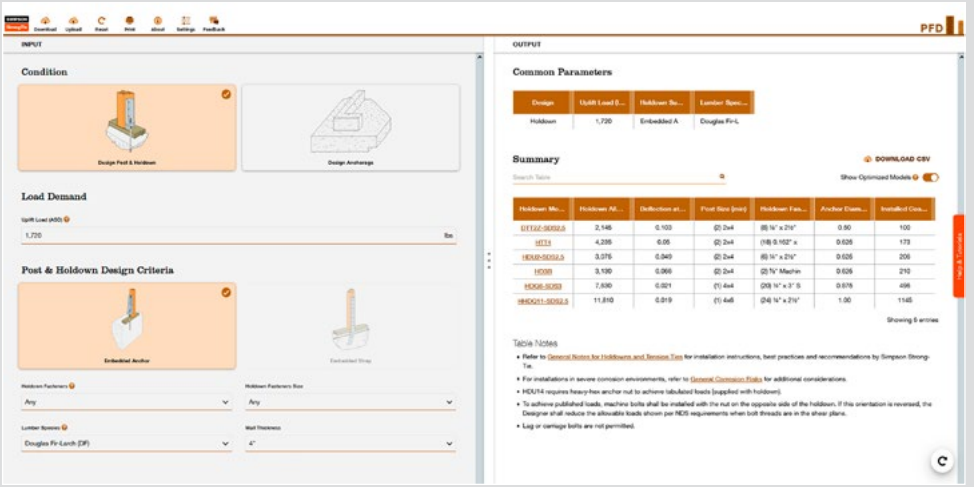

C-C-2021 ©2021 SIMPSON STRONG-TIE COMPANY INC.

AnchorMate®

Anchor Bolt Holder

The reusable AnchorMate anchor bolt holder is designed to hold the anchor in place before the concrete pour, as required in some jurisdictions. The gripping section secures the bolt in place without a nut for quicker setup and teardown. It also protects the threads from wet concrete and simplifies trowel finishing.

Features:

- Built-in 2x4 and 2x6 stops eliminate measuring.
- Color coded for easy size identification.
- Use the AnchorMate to secure the SSTB/SB anchors to the form board before the concrete pour. Alignment arrows (left or right) match the SSTB/SB bolt head arrow.

Material: Engineered composite polymer

Model No.	Diameter (in.)	Color
AM1/2	½	Yellow
AM5/8	⅝	Blue
AM3/4	¾	Red
AM7/8	⅞	Green
AM1	1	Black

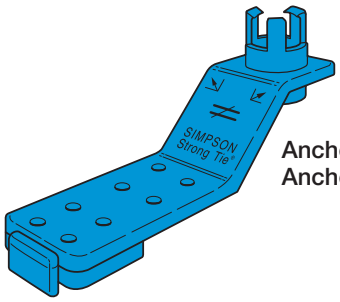

AnchorMate Anchor Bolt Holder

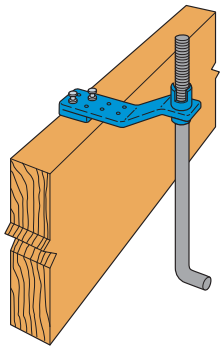

Typical AnchorMate Installation for a 2x6 Mudsill

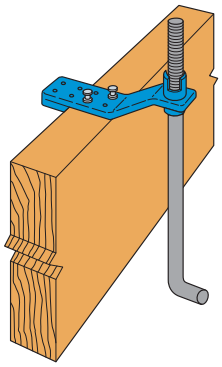

Typical AnchorMate Installation for a 2x4 Mudsill

ABS

Anchor Bolt Stabilizer

The ABS stabilizes the anchor bolt to prevent it from being pushed against the form during the concrete pour.

Features:

- Supports the bolt approximately 8" below the top of the concrete
- Model ABS5/8 is for the ⅝" SSTB and ABS7/8 is for the ⅞" SSTB
- Thin section limits the effect of a cold joint
- Sized for 2x4 and 2x6 mudsills

Material: Engineered composite polymer

Model No.	Diameter (in.)	Color
ABS5/8	⅝	Blue
ABS7/8	⅞	Green

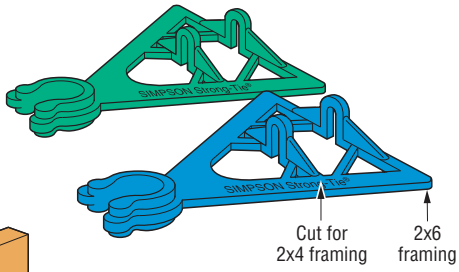

ABS Anchor Bolt Stabilizer

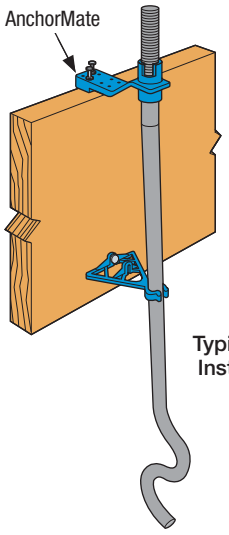

Typical ABS Installation

C-C-2021 ©2021 SIMPSON STRONG-TIE COMPANY INC.

SSTB®

Anchor Bolt

This product is preferable to similar connectors because of (a) easier installation, (b) higher loads, (c) lower installed cost, or a combination of these features.

The SSTB anchor bolt is designed for maximum performance as an anchor bolt for holdowns and Simpson Strong-Tie Strong-Wall® shearwalls. Extensive testing has been done to determine the design load capacity of the SSTB when installed in many common applications.

The Simpson Strong-Tie SSTB anchor bolts are code listed by ICC-ES under the 2012, 2015, 2018 and 2021 IBC® and IRC®.

Features:

- Identification on the bolt head showing embedment angle and model
- Offset angle reduces side bursting, and provides more concrete cover
- Rolled thread for higher tensile capacity
- Stamped embedment line aids installation
- Available in HDG for additional corrosion resistance

Material: ASTM F-1554, Grade 36

Finish: None. May be ordered HDG; contact Simpson Strong-Tie.

Installation:

- SSTB is suitable for monolithic and two-pour concrete applications.
- Nuts and washers for holdown attachment are not supplied with the SSTB; install standard nuts, couplers and/or washers as required.
- On HDG SSTB anchors, chase the threads to use standard nuts or couplers or use overtapped products in accordance with ASTM A563, for example Simpson Strong-Tie® NUT⅝-OST, NUT⅞-OST, CNW⅝-OST, CNW⅞-OST.
- Install SSTB before the concrete pour using AnchorMate® anchor bolt holders. Install the SSTB per the plan view detail.
- Minimum concrete compressive strength is 2,500 psi.
- When rebar is required it does not need to be tied to the SSTB.
- Order SSTBL models (example: SSTB16L) for longer thread length (16L = 5½", 20L = 6½", 24L = 6", 28L = 6½"). SSTB and SSTBL load values are the same. SSTB34 and SSTB36 feature 4½" and 6½" of thread respectively and are not available in "L" versions.

GFCMU (Grout-Filled Concrete Masonry Units)

- One horizontal #4 rebar in the second course.
- One vertical #4 rebar in adjacent cell for ⅝"-diameter SSTB.
- One vertical #4 rebar in an adjacent cell and additional vertical #4 rebar(s) at 24" o.c. max. for ⅞"-diameter SSTBs (2 total vertical rebars for end wall corner, 3 total vertical rebars for midwall).

Codes: See p. 11 for Code Reference Key Chart

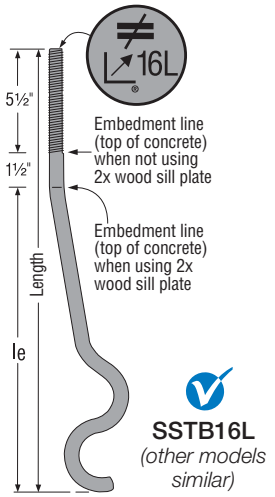

SSTB16L
(other models similar)

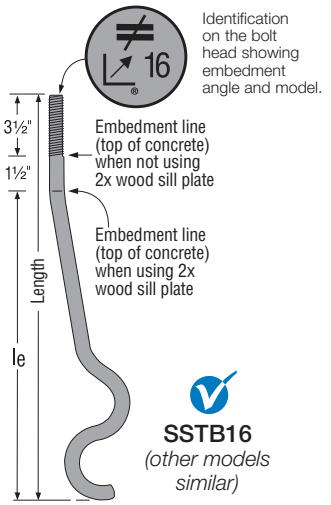

SSTB16
(other models similar)

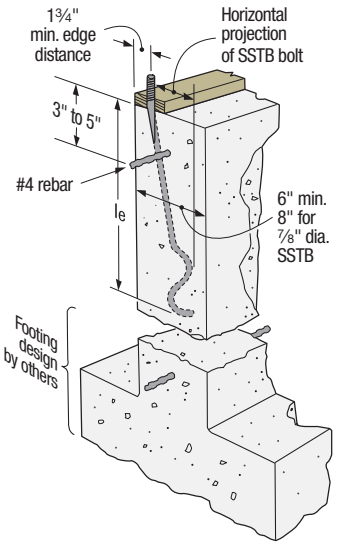

Typical SSTB Installation in Concrete Foundation
Maintain minimum rebar cover, per ACI-318 concrete code requirements

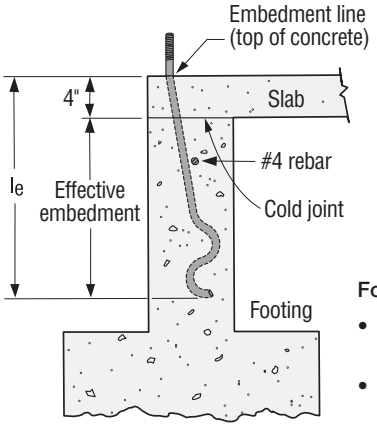

Two-Pour Installation
(SSTB20, 24, 34 and 36)

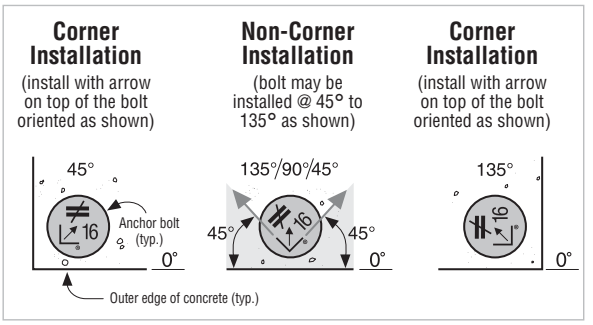

Plan View of SSTB Placement in Concrete and GFCMU

For two-pour (4" slab) installation loads:

- When using the SSTB20, use the equivalent loads of the SSTB16.
- When using the SSTB24, use the equivalent loads of the SSTB20.
- When using the SSTB34 or 36, use the equivalent loads of the SSTB28.

C-C-2021 ©2021 SIMPSON STRONG-TIE COMPANY INC.

Anchor Bolt (cont.)

These products are available with additional corrosion protection. For more information, see p. 14.

SSTB Bolts at Stemwall

Model No.	Dimensions (in.)				Allowable Tension Loads						Code Ref.
	Stemwall Width	Diameter	Length	Min. Embed. (l_e)	Wind and SDC A&B			SDC C–F			
					Midwall	Corner	End Wall[6]	Midwall	Corner	End Wall[6]	
SSTB16	6	⅝	17⅝ (16L = 19⅝)	12⅝	3,465	3,465	3,465	2,550	2,550	2,550	IBC, FL, LA
SSTB20	6	⅝	21⅝ (20L = 24⅝)	16⅝	4,145	3,880	3,880	3,145	2,960	2,960	
SSTB24	6	⅝	25⅝ (24L = 28⅛)	20⅝	4,825	4,295	4,295	3,740	3,325	3,325	
SSTB28	8	⅞	29⅞ (28L = 32⅞)	24⅞	9,505	8,360	7,310	8,315	7,315	6,395	
SSTB34	8	⅞	34⅞	28⅞	9,505	8,360	7,310	8,315	7,315	6,395	
SSTB36	8	⅞	36⅞	28⅞	9,505	8,360	7,310	8,315	7,315	6,395	

1. Rebar is required at the top of stem wall foundations, but is not required for slab-on-grade edge and garage curb, or stem wall garage front installations.
2. Minimum end distances for SSTB bolts are as shown in graphics.
3. To obtain LRFD values, multiply ASD seismic load values by 1.43 and wind load values by 1.67.
4. Per Section 1613 of the IBC, detached one- and two-story dwellings in SDC C may use "Wind and SDC A&B" allowable loads.
5. Midwall loads apply when anchor is 1.5 l_e or greater from the end. For bolts acting in tension simultaneously, the minimum bolt center-to-center spacing is 3 l_e.
6. SSTB28, SSTB34 and SSTB36 with 3⅞" end distance allowable loads are 6,330 lb. (Wind and SDC A&B) and 5,550 lb. (SDC C–F).

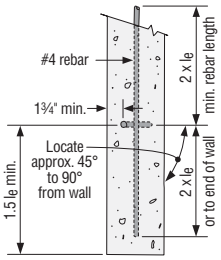

Midwall

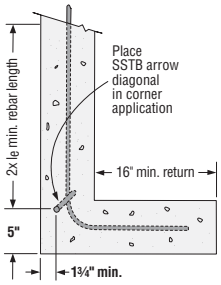

Corner

Stemwall Plan Views

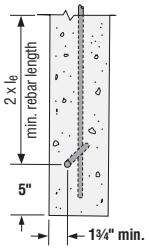

End Wall

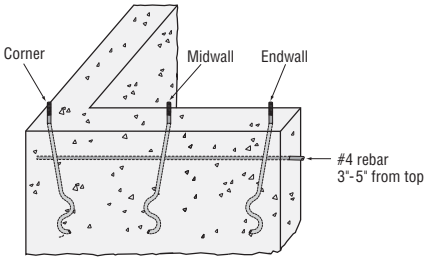

Perspective View

SSTB Bolts at Stemwall: Garage Front

Model No.	Dimensions (in.)				Allowable Tension Loads				Code Ref.
	Stemwall Width	Diameter	Length	Min. Embed. (le)	Wind and SDC A&B		SDC C–F		
					Step-Down End	Corner	Step-Down End	Corner	
SSTB28	8	⅞	29⅞	24⅞	6,735	6,765	5,895	5,920	IBC, FL, LA

1. Rebar is required at the top of stem wall foundations, but is not required for slab-on-grade edge and garage curb, or stem wall garage front installations.
2. Minimum end distances for SSTB bolts are as shown in graphics.
3. To obtain LRFD values, multiply ASD seismic load values by 1.43 and wind load values by 1.67.
4. Per Section 1613 of the IBC, detached one- and two-story dwellings in SDC C may use "Wind and SDC A&B" allowable loads.
5. Midwall loads apply when anchor is 1.5 l_e or greater from the end. For bolts acting in tension simultaneously, the minimum bolt center-to-center spacing is 3 l_e.

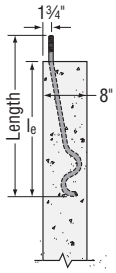

Stemwall Garage Front

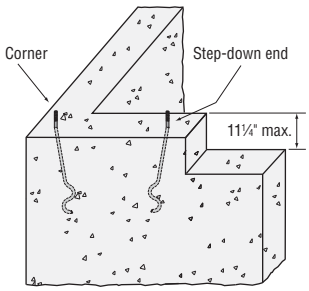

Perspective View

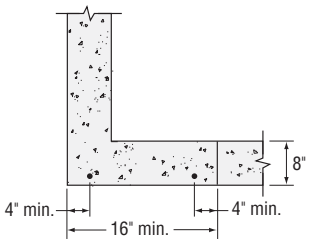

Plan View

C-C-2021 ©2021 SIMPSON STRONG-TIE COMPANY INC.

Anchor Bolt (cont.)

These products are available with additional corrosion protection. For more information, see p. 14.

SSTB Bolts at Slab on Grade: Edge

Model No.	Dimensions (in.)				Allowable Tension Loads				Code Ref.
	Footing Width	Diameter	Length	Min. Embed. (le)	Wind and SDC A&B		SDC C–F		
					Midwall	Corner	Midwall	Corner	
SSTB16	12	⅝	17⅝	12⅝	5,140	5,140	3,780	3,780	IBC, FL, LA
SSTB20	12	⅝	21⅝	16⅝	6,285	6,285	4,785	4,785	
SSTB24	12	⅝	25⅝	20⅝	6,675	6,675	5,790	5,790	
SSTB28	12	⅞	29⅞	24⅞	12,640	13,080	11,060	11,645	
SSTB34	12	⅞	34⅞	28⅞	12,640	13,080	11,060	11,645	
SSTB36	12	⅞	36⅞	28⅞	12,640	13,080	11,060	11,645	

1. Rebar is required at the top of stem wall foundations, but is not required for slab-on-grade edge and garage curb, or stem wall garage front installations.
2. Minimum end distances for SSTB bolts are as shown in graphics.
3. To obtain LRFD values, multiply ASD seismic load values by 1.43 and wind load values by 1.67.
4. Per Section 1613 of the IBC, detached one- and two-story dwellings in SDC C may use "Wind and SDC A&B" allowable loads.
5. Midwall loads apply when anchor is 1.5 l_e or greater from the end. For bolts acting in tension simultaneously, the minimum bolt center-to-center spacing is 3 l_e.

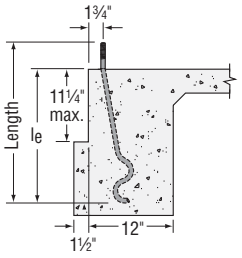

Slab Edge

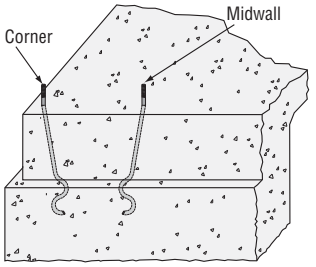

Perspective View

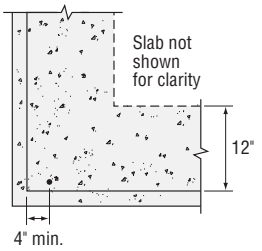

Plan View

SSTB Bolts at Slab on Grade: Garage Curb

Model No.	Dimensions (in.)				Allowable Tension Loads				Code Ref.
	Curb Width	Diameter	Length	Min. Embed. (le)	Wind and SDC A&B		SDC C–F		
					Step-Down End	Corner	Step-Down End	Corner	
SSTB28	6	⅞	29⅞	24⅞	9,685	11,880	8,475	10,395	IBC, FL, LA

1. Rebar is required at the top of stem wall foundations, but is not required for slab-on-grade edge and garage curb, or stem wall garage front installations.
2. Minimum end distances for SSTB bolts are as shown in graphics.
3. To obtain LRFD values, multiply ASD seismic load values by 1.43 and wind load values by 1.67.
4. Per Section 1613 of the IBC, detached one- and two-story dwellings in SDC C may use "Wind and SDC A&B" allowable loads.

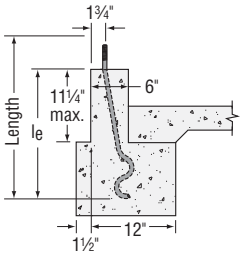

Slab Garage Curb

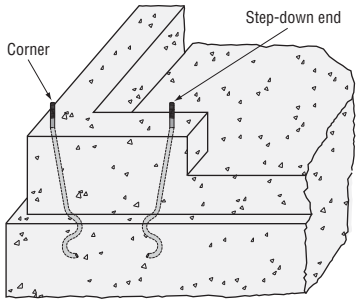

Perspective View

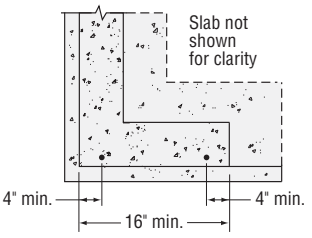

Plan View

C-C-2021 ©2021 SIMPSON STRONG-TIE COMPANY INC.

Anchor Bolt (cont.)

These products are available with additional corrosion protection. For more information, see p. 14.

SSTB Bolts in 8" GFCMU (Grout-Filled Concrete Masonry Units)

Model No.	Dimensions (in.)			Allowable Tension Load		Code Ref.
	Diameter	Length	Min. Embed. (l_e)	Midwall	Corner/ End Wall	
SSTB16	⅝	17⅝ (16L = 19⅝)	12⅝	2,865	1,220	—
SSTB20	⅝	21⅝ (20L = 24⅝)	16⅝	2,865	1,220	
SSTB24	⅝	25⅝ (24L = 28⅛)	20⅝	2,865	1,220	
SSTB28	⅞	29⅞ (28L = 32⅞)	24⅞	4,185	3,000	
SSTB34	⅞	34⅞	28⅞	4,185	3,000	
SSTB36	⅞	36⅞	28⅞	4,185	3,000	

1. Loads are based on a minimum CMU compressive strength, f'_m, of 1,500 psi.
2. Minimum end distance required to achieve midwall table loads is 1.5 l_e.
3. Minimum end distance for corner/end wall loads is 4¼".
4. Loads may not be increased for duration of load.
5. Allowable loads are based on the average ultimate load with a safety factor of 5.0 per ACI 530.

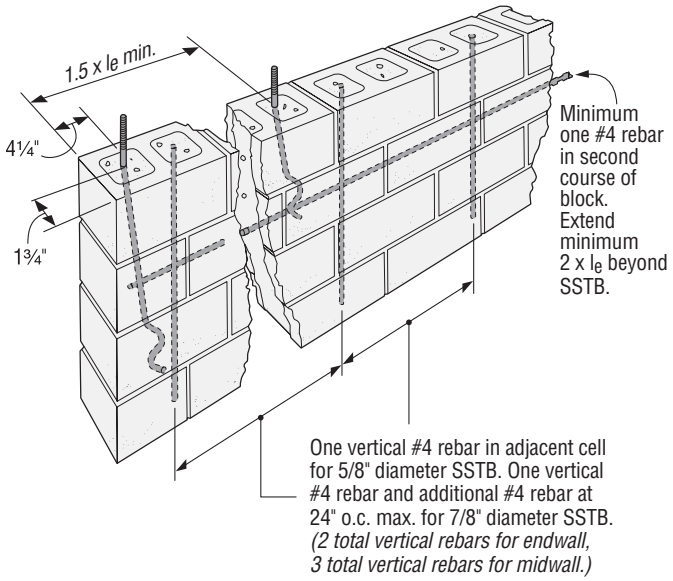

Typical SSTB Installation in Grout-Filled Concrete Block

C-C-2021 ©2021 SIMPSON STRONG-TIE COMPANY INC.

SAR

Shallow Anchor Rod

SAR anchor rods are for use with the ABL anchor bolt locator. They combine to make an economical podium-deck anchorage solution. Anchorage specification is per designer.

Features:

- Proprietary, pre-attached plate washer
- Available in standard or high strength
- Anchor rod diameters from ½" to 1¼"
- Standard lengths available 18", 24", 30" or 36"
- Specify "HDG" for hot-dip galvanized

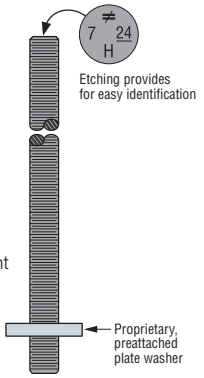

SAR
US Patent Pending

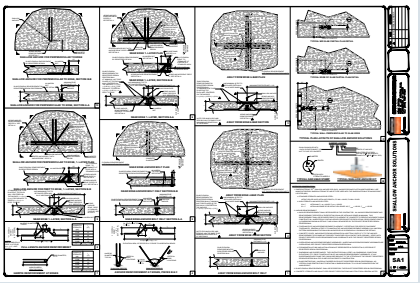

Reference the Shallow Anchor Solutions details for more information.

Visit **strongtie.com/sardetails.**

ABL

Anchor Bolt Locator

The ABL enables the accurate and secure placement of anchor bolts on concrete-deck forms prior to concrete placement. The structural heavy-hex nut is attached to a pre-formed steel "chair," which eliminates the need for an additional nut on the bottom of the anchor bolt. Electro-galvanized versions available for HDG anchor bolts. Order ABL-OST when using HDG anchor bolts.

Features:

- Designed for optimum concrete flow.
- Installed with (2) nails or (2) screws.
- Meets code requirement for 1" stand off.
- The ABL is designed for use with SAR anchors.

Material: Nut — heavy hex; chair — steel

Finish: Nut — none or electro-galvanized; chair — G90; ABL-OST — HDG

Model No.	Anchor Bolt Diameter (in.)
ABL4-1	½
ABL5-1	⅝
ABL6-1	¾
ABL7-1	⅞
ABL8-1	1
ABL9-1	1⅛
ABL10-1	1¼

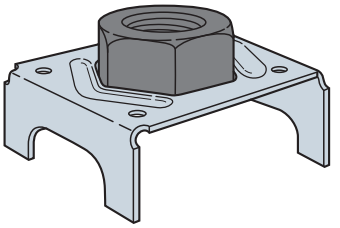

ABL
US Patents 8,621,816 and 8,381,482

Shallow Podium Slab

Anchor Kit

The Shallow Podium Slab anchor kit includes the patented Anchor Bolt Locator (ABL) and patent-pending Shallow Anchor Rod (SAR). Uniquely suited for installation to concrete-deck forms, the ABL enables accurate and secure placement of anchor bolts. The structural heavy hex nut is attached to a pre-formed steel "chair" and becomes the bottom nut of the anchor assembly. The shallow anchor is provided with a plate washer fixed in place that attaches on the ABL nut when assembled and increases the anchor breakout and pullout capacity. The shallow anchor is easily installed before or after placement of the slab reinforcing steel or tendons. Where higher anchor capacities are needed such as at edge conditions or to meet seismic ductility requirements, the anchor kit is combined with anchor reinforcement.

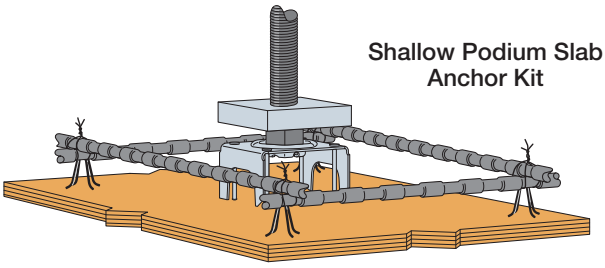

Naming Legend

SA1OST-8H-18KT

- Shallow Anchor
- Standoff (1 for 1" cover)
- Oversize Threads (When hot-dip galvanized anchors are specified)
- Rod Diameter in ⅛" Increments (Ex: 8 = ⅝" or 1")
- High Strength
- Length (18", 24", 30", 36")
- Kit (includes ABL and SAR)

C-C-2021 ©2021 SIMPSON STRONG-TIE COMPANY INC.

Drawing Finder

Drawing Library and Direct Download Tools

The fastest way to put Simpson Strong-Tie products into your plans.

Specify Simpson Strong-Tie products in your designs quickly and easily with our Drawing Finder web app and plugins. Our web-based tool makes it easy for you to find drawings of the exact products you need from our extensive library of over 40,000 drawings. Our Drawing Finder plugins for AutoCAD®, AutoCAD LT® and Revit® bring the same powerful search engine to the program you're working within, so that you never have to leave your project file. You can quickly download the most recent Simpson Strong-Tie product drawings directly into your design for a more efficient workflow. And the Drawing Finder for Bluebeam® plugin offers a library of PDF files to help users of Bluebeam Revu create markups and reviews.

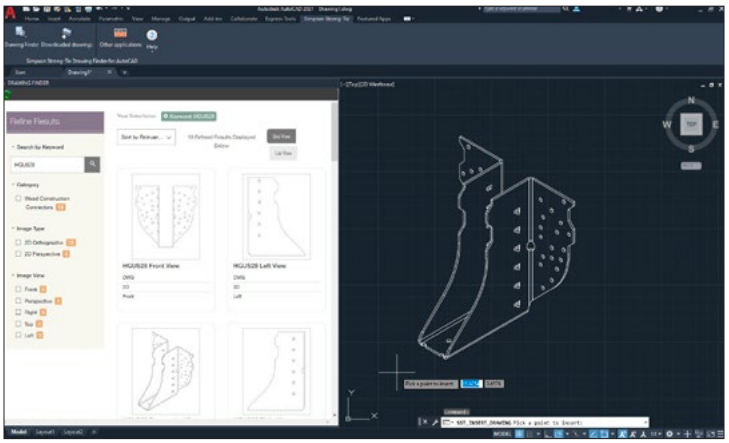

Drawing Finder for AutoCAD and AutoCAD LT

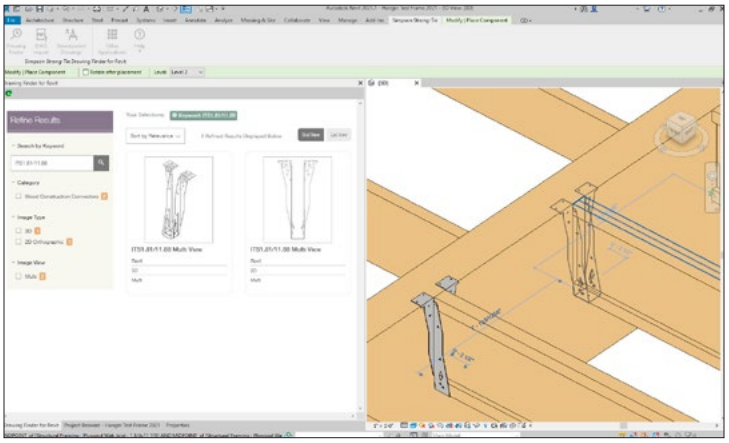

Drawing Finder for Revit

Features and Benefits

- Extensive library of over 40,000 connector, anchor and fastener drawings
- Search feature makes finding products fast and simple
- Previously downloaded drawings remain easily accessible
- Compatible with the most current versions of AutoCAD, AutoCAD LT and Revit on Windows
- Seven different file formats available for more compatibility: PDF, IFC, SAT, STL, DWG, DXF and RFA

MORE INFO

Visit **strongtie.com/drawingfinder** to access the Drawing Finder web app or download our free Drawing Finder plugins, and start simplifying and streamlining your project workflows.

C-C-2021 ©2021 SIMPSON STRONG-TIE COMPANY INC.

PAB

Pre-Assembled Anchor Bolt

The PAB anchor bolt is a versatile cast-in-place anchor bolt ideal for high-tension-load applications, such as rod systems and shearwalls. It features a plate washer, at the embedded end, sandwiched between two fixed hex nuts and a head stamp for easy identification after the pour.

- Available in diameters from ½" to 1¼" in lengths from 12" to 36" (in 6" increments)
- Available in standard and high-strength steel
- Head stamp contains the No Equal sign, diameter designation and an "H" on high-strength rods

Material:
Standard Steel — ASTM F1554 Grade 36, A36 or A307; F_u = 58 ksi
High-Strength Steel (up to 1" dia.) — ASTM A449; F_u = 120 ksi
High-Strength Steel (1⅛" and 1¼" dia.) — ASTM A193 B7 or F1554 Grade 105; F_u = 125 ksi

Finish: None. May be ordered in HDG; contact Simpson Strong-Tie.

Installation:

- On HDG PABs, chase the threads to use standard nuts or couplers or use overtapped products in accordance with ASTM A563; for example, Simpson Strong-Tie® NUT⅝-OST, NUT⅞-OST, CNW⅝-OST, CNW⅞-OST. OST couplers are typically oversized on one end of the coupler nut only and will be marked with an "O" on oversized side. Couplers may be special ordered with both ends oversized. Contact Simpson Strong-Tie.

Related Software

The Simpson Strong-Tie Anchor Designer™ Software analyzes and suggests anchor solutions using the ACI 318 strength-design methodology (or CAN/CSA A23.3 Annex D Limit States Design methodology). It provides cracked and uncracked-concrete anchorage solutions for numerous Simpson Strong-Tie mechanical and adhesive anchors as well as the PAB anchor bolt. With its easy-to-use graphical user interface, the software makes it easy for the designer to identify anchorage solutions without having to perform time-consuming calculations by hand. See **strongtie.com/software**.

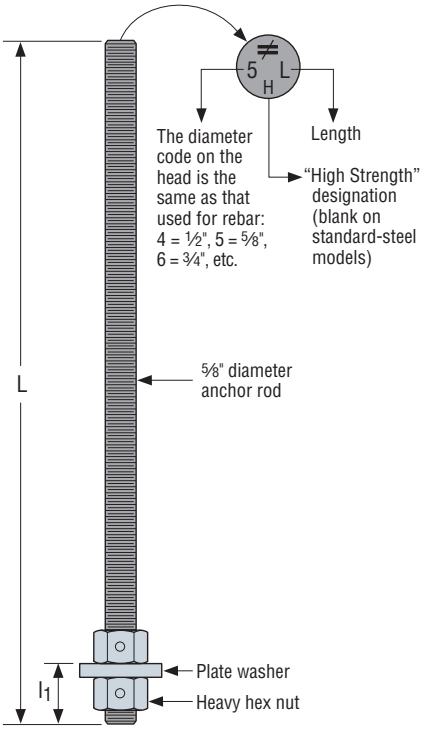

PAB

Naming Legend

PAB5H-12

- PAB Anchor Bolt
- Diameter* and Grade
- Length (12", 18", 24", 30" or 36")

*Units in ⅛" Increments (Ex: 9 = ⅝" or 1⅛")

How to Specify and Order:

- When calling out PAB anchor bolts, substitute the desired length for the "XX" in the Root Model Number
- For a ⅝" x 18" anchor bolt, the model number would be PAB5-18 (or PAB5H-18 for high strength)

PAB Anchor Bolt

Diameter (in.)	Plate Washer Size (in.)	l_1 (in.)	Root Model No.		Lengths (in.)
			Standard Strength	High Strength	
½	⅜ x 1½ x 1½	1⅛	PAB4—XX	PAB4H—XX	12" to 36" (in 6" increments)
⅝	½ x 1¾ x 1¾	1⅜	PAB5—XX	PAB5H—XX	
¾	½ x 2¼ x 2¼	1½	PAB6—XX	PAB6H—XX	
⅞	½ x 2½ x 2½	1⅝	PAB7—XX	PAB7H—XX	
1	⅝ x 3 x 2¾	1⅞	PAB8—XX	PAB8H—XX	
1⅛	⅝ x 3½ x 3¼	2	PAB9—XX	PAB9H—XX	
1¼	¾ x 3½ x 3½	2¼	PAB10—XX	PAB10H—XX	

1. Lengths greater than 36" are available as a special order.
2. Plate washers are designed to develop the capacity of the bolt.

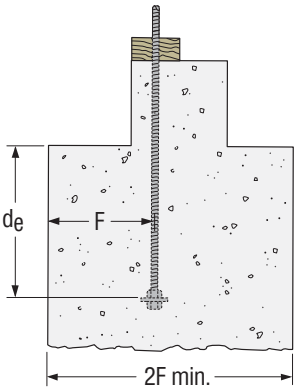

Design loads are calculated using a full shear cone. Coverage on each side of the bolt shall be a minimum of F or reductions must be taken.

C-C-2021 ©2021 SIMPSON STRONG-TIE COMPANY INC.

Pre-Assembled Anchor Bolt (cont.)

PAB Anchor Bolt – Anchorage Solutions

Design Criteria	Diameter (in.)	Anchor Bolt	2,500 psi Concrete				3,000 psi Concrete			
			Dimensions (in.)		Tension Load		Dimensions (in.)		Tension Load	
			d_e	F	ASD	LRFD	d_e	F	ASD	LRFD
Wind	½	PAB4	4½	7	4,270	6,405	4	6	4,270	6,405
	⅝	PAB5	4	6	4,030	6,720	4	6	4,415	7,360
			6	9	6,675	10,010	5½	8½	6,675	10,010
	¾	PAB6	5½	8½	6,500	10,835	5	7½	6,175	10,290
			7½	11½	9,610	14,415	7	10½	9,610	14,415
	⅞	PAB7	6	9	7,405	12,345	5½	8½	7,120	11,870
			9	13½	13,080	19,620	8½	13	13,080	19,620
		PAB7H	9	13½	13,610	22,680	8½	13	13,680	22,805
			14	21	27,060	40,590	13½	20½	27,060	40,590
	1	PAB8	8	12	11,405	19,005	7½	11½	11,340	18,900
			10½	16	17,080	25,565	10	15	17,080	25,560
		PAB8H	10½	16	17,150	28,580	10	15	17,460	29,100
			16½	25	35,345	53,015	15½	23½	35,345	53,015
	1⅛	PAB9	9	13½	13,610	22,680	8	12	12,495	20,820
			12½	19	21,620	32,430	12	18	21,620	32,430
	1¼	PAB10	14	21	26,690	40,035	13½	20½	26,690	40,035
Seismic	½	PAB4	5	7½	4,270	6,405	4½	7	4,270	6,405
	⅝	PAB5	6½	10	6,675	10,010	6	9	6,675	10,010
	¾	PAB6	7½	11½	9,060	12,940	7	10½	8,945	12,780
			8	12	9,610	14,415	7½	11½	9,610	14,415
	⅞	PAB7	9	13½	11,905	17,010	8½	13	11,970	17,100
			10	15	13,080	19,620	9½	14½	13,080	19,620
		PAB7H	14½	22	25,350	36,215	13½	20½	24,650	35,215
			15½	23½	27,060	40,590	14½	22	27,060	40,590
	1	PAB8	11	16½	15,996	22,850	10½	16	16,435	23,480
			11½	17½	17,080	25,625	11	16½	17,080	25,625
		PAB8H	17	25½	33,045	47,205	16	24	32,720	46,740
			18	27	35,345	53,015	17	25½	35,345	53,015
	1⅛	PAB9	12½	19	19,795	28,275	12	18	20,255	28,940
			13½	20½	21,620	32,430	12½	19	21,620	32,430
	1¼	PAB10	14½	22	25,350	36,215	14	21	26,190	37,415
			15	22½	26,690	40,035	14½	22	26,690	40,035

1. Anchorage designs conform to ACI 318-14 and assume cracked concrete with no supplementary reinforcement.
2. Seismic indicates Seismic Design Category C-F and designs comply with ACI 318-14, Section 17.2.3.4. Per Section 1613 of the 2012/2015/2018/2021 IBC, detached one- and two-family dwellings in SDC C may use wind values.
3. Wind includes Seismic Design Category A and B.
4. Foundation dimensions are for anchorage only. Foundation design (size and reinforcement) by designer. The registered design professional may specify alternative embedment, footing size, and anchor bolt.
5. Where tension loads are governed by anchor steel, the design provisions from AISC 360 are used to determine the tensile steel limit. LRFD values are calculated by multiplying the nominal AISC steel capacity by a 0.75 phi factor, and allowable values are calculated by dividing the AISC nominal capacity by a 2.0 omega factor.
6. Where tension loads are governed by ACI 318 concrete limit, the Allowable Stress Design (ASD) values are obtained by multiplying Load Resistance Factor Design (LRFD) capacities by 0.7 for Seismic and by 0.6 for Wind.

C-C-2021 ©2021 SIMPSON STRONG-TIE COMPANY INC.

Holdown Anchorage Solutions

The anchor bolt solutions in Table 1 (DF/SP Lumber) and Table 2 (SPF/HF Lumber) provide anchorage solutions for the holdown sizes listed. Unless noted otherwise, the solutions meet the maximum published allowable load of the holdown. Refer to pp. 32–34 for SB anchor bolt installation details, pp. 36–39 for SSTB anchor bolts installation details, and p. 42 for PAB anchor bolt details.

Table 1 — Anchorage Selection Guide for Holdowns Attached to DF/SP Lumber

Holdown on DF/SP Lumber	Stemwall					Slab on Grade			
	Stemwall Width (in.)	Wind and Seismic Design Category A&B		Seismic Design Category C–F		Wind and Seismic Design Category A&B		Seismic Design Category C–F	
		Midwall/Corner	End Wall	Midwall/Corner	End Wall	Midwall/Corner	Garage Curb	Midwall/Corner	Garage Curb
HDU2	6	SSTB16		SSTB24		SSTB16		SSTB16	SSTB20* (2,960)
HDU4	6	SB5/8X24		SB5/8X24		SSTB16	SB5/8X24	SSTB20	SB5/8X24
HDU5	6	SB5/8X24		SB5/8X24		SSTB20	SB5/8X24	SSTB24	SB5/8X24
HDU8	8	SSTB28	PAB7	SB7/8X24* (7,855)	PAB7	SSTB28		SSTB28	
HDQ8	8	SB7/8X24* (8,980)	PAB7	PAB7	PAB7	SSTB28		SSTB28	PAB7
HDU11	—	PAB8		PAB8		SB1x30		SB1X30	
HHDQ11	—								
HDU14	—	PAB8		PAB8		SB1x30		SB1X30 (See Note 4)	
HHDQ14	—								
LTTP2	6	SSTB16		SSTB16* (2,550)		SSTB16		SSTB16	
LTTI31	6								
HTT4	6	SSTB24* (4,295)		SB5/8X24		SSTB16	SSTB24* (4,295)	SSTB20	SB5/8X24
HTT5	6	SB5/8X24		SB5/8X24		SSTB16	SB5/8X24	SSTB24	SB5/8X24
HD3B	6	SSTB16		SSTB24		SSTB16		SSTB16	SSTB24
HD5B	6	SB5/8X24		SB5/8X24	SB5/8X24	SSTB16	SB5/8X24	SSTB24	SB5/8X24
HD7B	8	SSTB28* (7,310)		SSTB28* (7,315)	PAB7	SSTB28		SSTB28	
HD9B	—	PAB7		PAB7		SSTB28		SSTB28	PAB7
HD12	—	PAB8		PAB8		SB1X30		SB1X30 (See Note 4)	

See foonotes below.

Table 2 — Anchorage Selection Guide for Holdowns Attached to SPF/HF Lumber

Holdown on SPF/HF Lumber	Stemwall					Slab on Grade			
	Stemwall Width (in.)	Wind and Seismic Design Category A&B		Seismic Design Category C–F		Wind and Seismic Design Category A&B		Seismic Design Category C–F	
		Midwall/Corner	End Wall	Midwall/Corner	End Wall	Midwall/Corner	Garage Curb	Midwall/Corner	Garage Curb
HDU2	6	SSTB16		SSTB16		SSTB16		SSTB16	
HDU4	6	SSTB16		SSTB24		SSTB16		SSTB16	SSTB24
HDU5	6	SSTB24* (4,295)		SB5/8X24		SSTB16	SSTB24* (4,295)	SSTB20	SB5/8X24
HDU8	8	SSTB28		SSTB28	SSTB28* (6,395)	SSTB28		SSTB28	SSTB28
HDQ8	8	SSTB28		SSTB28	SSTB28* (6,395)	SSTB28		SSTB28	SSTB28
HDU11	8	SB1X30* (9,505)	PAB8	PAB8	PAB8	SB1x30		SB1x30	
HHDQ11	8	SB1X30	PAB8	PAB8					
HDU14	—	PAB8		PAB8		SB1x30		SB1x30	
HHDQ14	—								
LTTP2	6	SSTB16		SSTB16		SSTB16		SSTB16	
LTTI31	6								
HTT4	6	SSTB20		SB5/8X24		SSTB16	SSTB20	SSTB16* (3,780)	SB5/8X24
HTT5	6	SB5/8X24		SB5/8X24		SSTB20	SB5/8X24	SSTB24	SB5/8X24
HD3B	6	SSTB16		SSTB24		SSTB16		SSTB16	SSTB20* (2,960)
HD5B	6	SSTB24		SB5/8X24		SSTB16	SSTB24	SB5/8X24	
HD7B	8	SSTB28		SSTB28		SSTB28		SSTB28	
HD9B	8	SSTB28* (8,360)	PAB7	PAB7		SSTB28* (8,360)	PAB7	SSTB28	PAB7
HD12	—	PAB8		PAB8		SB1x30		SB1x30	

*Anchorage solutions marked with an asterisk (*) are within 5% of the holdown's maximum allowable load.
The load in parenthesis is the allowable load of the anchor bolt.

1. Foundation dimensions are for anchorage only. Foundation design (size and reinforcement) by designer. The registered design professional may specify alternative embedment, footing size, and anchor bolt.
2. Minimum edge distance is 1¾". Minimum end distance is 5" for SSTBs and the SB1x30; 4¼" for SB⅝x24 and SB⅞x24.
3. PAB7 anchor bolts require d_e = 10" with F = 15". PAB8 anchor bolts require d_e = 12" with F = 18". Anchorage design conforms to ACI 318 and assumes f'_c = 2,500 psi cracked concrete with no supplementary reinforcement, with seismic design conforming to ACI 318-14, Section 17.2.3.4. CNW7/8 and CNW1 available for cases where a longer anchor bolt is required. Select bolt length based on foundation configuration to meet the required footing embedment.
4. Where noted, SB1x30 requires footing width to be 18" wide. PAB8 solution may also be used.
5. Per Section 1613 of the IBC, detached one- and two-family dwellings in SDC C may use Wind and Seismic Design Category A&B values.
6. PAB anchorage capacity is based on footing dimensions as shown in table on p. 43. See illustration for PAB installed in a footing on p. 42. For stemwall installations, PAB must be embedded into the footing.

C-C-2021 ©2021 SIMPSON STRONG-TIE COMPANY INC.

Holdown Anchorage Solutions (cont.)

Stemwall Installation

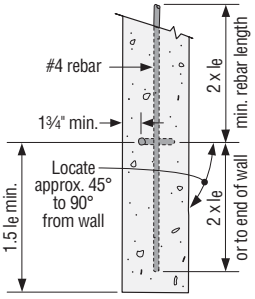

Midwall

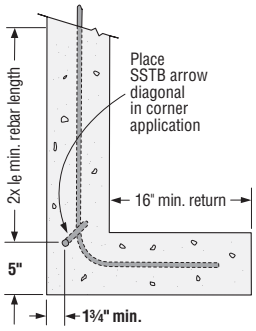

Corner

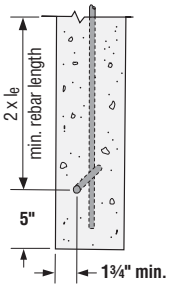

End Wall

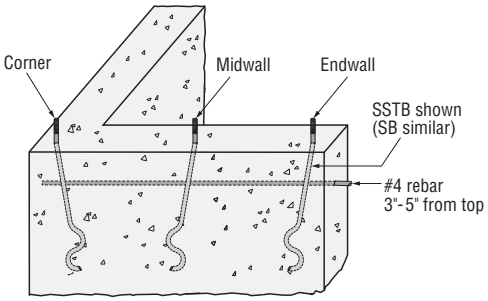

Perspective View

Slab on Grade Installation

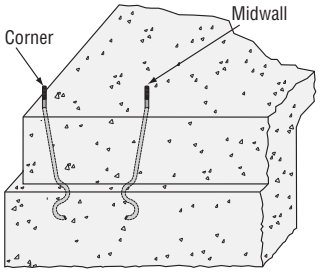

Perspective View

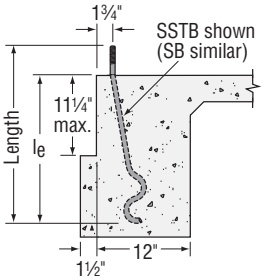

Slab Edge

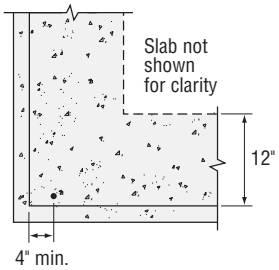

Plan View

Garage Curb Installation (HDU14, HHDQ14 and HD12)

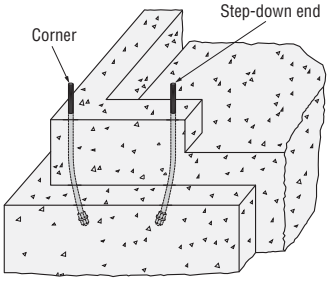

Perspective View

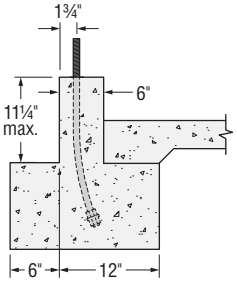

Slab Edge

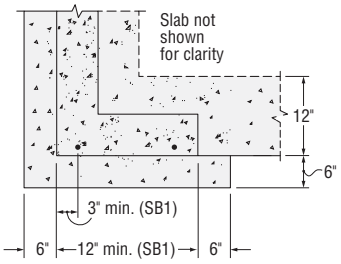

Plan View

Slab on Grade Installation (HDU14, HHDQ14 and HD12)

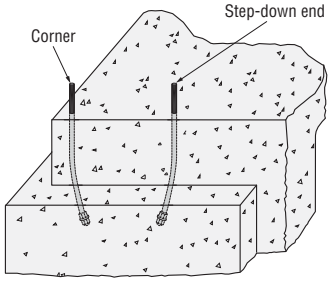

Perspective View

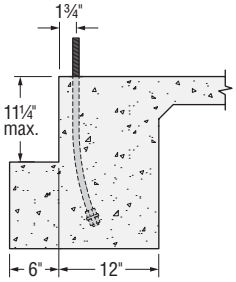

Slab Edge

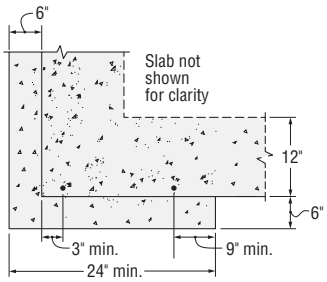

Plan View

C-C-2021 ©2021 SIMPSON STRONG-TIE COMPANY INC.

BP/LBP/RP6

Bearing Plates

Bearing plates give greater bearing surface than standard cut washers, and help distribute the load at these critical connections.

The BP1/2-3 and BP5/8-3 are 3" x 3" bearing plates that meet the latest requirements of the IRC and IBC. These plate washers are available uncoated or with a hot-dip galvanized (HDG) coating.

The BPS and LBPS are bearing plates that offer increased flexibility while meeting the latest requirements of the code for 2x4 and 2x6 walls. The slotted hole allows for adjustability to account for bolts that are not in the middle of the sill plate.

The BP5/8SKT uses ¼" x 1½" Strong-Drive® SDS Heavy-Duty Connector screws to provide lateral resistance when ⅝" diameter sill holes are overdrilled (screws are provided). The shear capacity of the connection and the sill/anchor bolt shall be determined by the designer for each installation.

The RP6 retrofit plate is installed on the outside of masonry buildings and helps tie the walls to the roof or floor structure with a ¾"-diameter rod.

Material: See table

Finish: LBP, LBPS — galvanized; BP7/8-2, BP5/8S — zinc plated; BPS, BP — none; RP6 — Simpson Strong-Tie gray paint. BPs, BPSs and RP6 may be ordered HDG; LBP and LBPS products may be ordered ZMAX®; contact Simpson Strong-Tie. See Corrosion Information, pp. 12–15. BPs available in black powder coat; add PC to model number.

Installation:

- See General Notes.
- BP/BPS — For shearwall applications, position edge of plate washer within ½" of sheathed edge of sill plate.
- BPS-6 plate washers are sized to accommodate the ½" from the sheathed edge in single- and double-sheathed 2x6 walls.
- Standard-cut washer required with BPS slotted bearing plates. Washer not required when used with Titen HD® heavy-duty screw anchors.

Codes: See p. 11 for Code Reference Key Chart; 2012/2015/2018/2021 IRC R602.11.1, 2015/2021 SDPWS 4.3.6.4.3

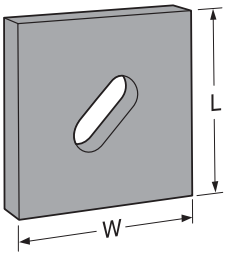

BPS
(LBPS similar)

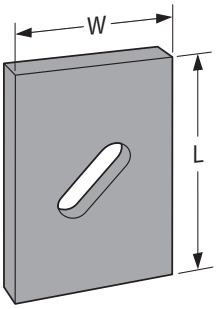

BPS1/2-6
(other models similar)

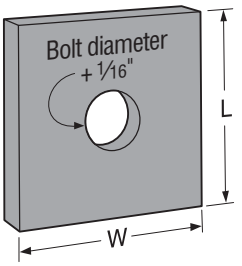

BP
(LBP similar)

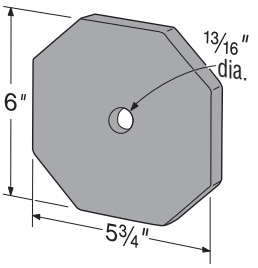

RP6

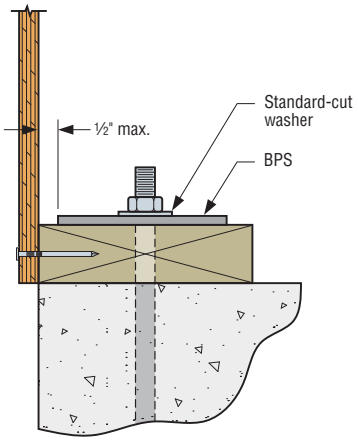

Typical BPS Installed as a Shear Anchor

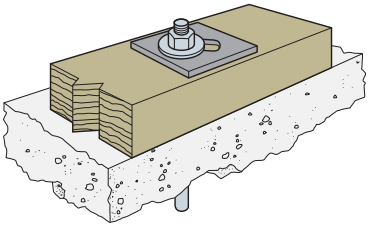

Typical BPS Installation

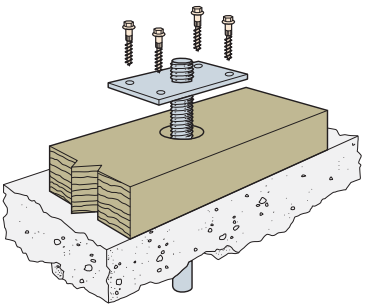

The BP5/8SKT is used when ⅝" diameter sill bolt holes are overdrilled

C-C-2021 ©2021 SIMPSON STRONG-TIE COMPANY INC.

Bearing Plates (cont.)

These products are available with additional corrosion protection. For more information, see p. 14.

Bolt Diameter (in.)	Model No.	Thickness	Dimensions (in.)		Code Ref.
			W	L	
⅜	BP 3/8-2	3/16"	2	2	IBC, FL
½	LBP 1/2	9/64"	2	2	PR
	LBPS 1/2	9/64"	3	3	
	BPS 1/2-3	3 ga.	3	3	
	BPS 1/2-6	3 ga.	3	4½	
	BP 1/2	3/16"	2	2	IBC, FL
	BP 1/2-3	3 ga.	3	3	
⅝	LBP 5/8	9/64"	2	2	PR
	LBPS 5/8	9/64"	3	3	
	BPS 5/8-3	3 ga.	3	3	
	BPS 5/8-6	3 ga.	3	4½	
	BP 5/8-2	3/16"	2	2	IBC, FL
	BP5/8SKT	3 ga.	4	2	PR
	BP 5/8	¼"	2½	2½	
	BP 5/8-3	3 ga.	3	3	IBC, FL
¾	BP 3/4-3	3 ga.	3	3	
	BPS 3/4-3	3 ga.	3	3	PR
	BPS 3/4-6	3 ga.	3	4½	
	RP6	⅜"	6	5¾	
⅞	BP 7/8-2	⅜"	1 15/16	2¼	
	BP 7/8	5/16"	3	3	
1	BP1	⅜"	3½	3½	

1. BP5/8SKT sold as a kit.
2. Standard-cut washer required with BPS 1/2-3, BPS 5/8-3, BPS 3/4-3, BPS 1/2-6, BPS 5/8-6, and BPS 3/4-6 (not provided) per the 2012/2015/2018/2021 IRC and 2015/2021 SDPWS.
3. 3 gauge is 0.229".

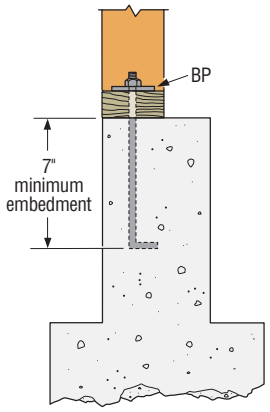

Typical BP Installed with a Mudsill Anchor Bolt

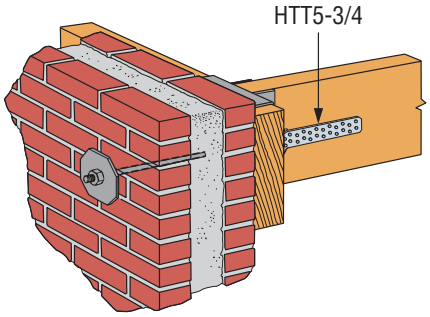

Typical RP6 Installation

Your Resource for URM Building Retrofit

Unreinforced masonry (URM) construction was commonplace from the 1800s up through the early 1900s. Unfortunately, unretrofitted URM structures are at a high risk of incurring major damage or failing in a significant lateral-load event, such as an earthquake. Tools for assessing and designing needed retrofits to mitigate risk to life, reduce damage and recovery time, and safeguard the historic integrity of these structures are available on our URM Retrofit Solutions page at **strongtie.com/urmretrofit**.

C-C-2021 ©2021 SIMPSON STRONG-TIE COMPANY INC.

RFB

Retrofit Bolt

The RFB retrofit bolt is a clean, oil-free, pre-cut threaded rod, supplied with nut and washer. It offers a complete engineered anchoring system when used with Simpson Strong-Tie® adhesive. Inspection is easy; the head is stamped with rod length and "No Equal" symbol for identification after installation.

Material: ASTM F1554 Grade 36

Finish: Zinc plated (unless otherwise noted), available in HDG (per ASTM A153)

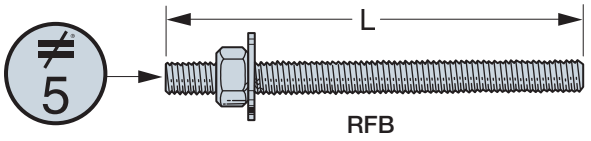

For more information on corrosion protection, see p. 14.

Size. (in.)	Zinc-Plated Model No.	Hot-Dip Galvanized Model No.
½ x 4	RFB#4X4	—
½ x 5	RFB#4X5	RFB#4X5HDG
½ x 6	RFB#4X6	RFB#4X6HDG
½ x 7	RFB#4X7	RFB#4X7HDG
½ x 8	—	RFB#4X8HDG
½ x 10	RFB#4X10	RFB#4X10HDG
⅝ x 5	RFB#5X5	RFB#5X5HDG
⅝ x 8	RFB#5X8	RFB#5X8HDG
⅝ x 10	RFB#5X10	RFB#5X10HDG
⅝ x 12	—	RFB#5X12HDG
⅝ x 16	RFB#5X16	RFB#5X16HDG
¾ x 10½	RFB#6X10.5	RFB#6X10.5HDG

1. Washer and nut provided on all RFBs.

CNW/HSCNW

Coupler Nuts

Simpson Strong-Tie coupler nuts are a tested and load-rated method to join threaded rod and anchor bolts. The Witness® Holes in each nut provides a means to verify when rods are properly installed. The positive stop feature helps ensure even threading into each end of the nut. The CNW exceeds the specified minimum tensile capacity of corresponding ASTM A36 bolts and threaded rod. The HSCNW exceeds the specified minimum tensile capacity of corresponding ASTM A449 bolts and threaded rod. Contact Simpson Strong-Tie for other coupler nut sizes.

Finish: Zinc plated

Installation:

- Tighten the two rods until each all-thread rod is visible in the Witness Hole. Any portion of thread visible in the Witness Hole is a correct installation.
- Standard CNW for use with non-hot-dip galvanized all-thread rod only.
- ⅝"- and ⅞"-diameter couplers available with oversized threads for installation to hot-dip galvanized bolts (order CNW5/8-5/8-OST and CNW7/8-7/8-OST).
- OST couplers are typically oversized on one end of the coupler nut only and will be marked with an "O" on oversized side. Couplers may be special ordered with both ends oversized. Contact Simpson Strong-Tie to order.

Codes: See p. 11 for Code Reference Key Chart

Model No.	Rod Diameter (in.)	H Min. (in.)	Allowable Tension Load (100)	Code Ref.
CNW1/2	½	1¼	4,265	IBC, FL
CNW5/8	⅝	1½	6,675	
CNW3/4	¾	1¾	9,610	
CNW7/8	⅞	2	13,080	—
CNW1	1	2¼	17,080	
CNW1-1/4	1⅛	2¾	26,690	
HSCNW3/4	¾	1¾	19,880	
HSCNW1	1	2¼	35,345	
Transition Couplers				
CNW5/8-1/2	⅝ to ½	1⅜	4,265	IBC, FL
CNW3/4-5/8	¾ to ⅝	1⅝	6,675	
CNW7/8-5/8	⅞ to ⅝	1¾	6,675	—
CNW1-7/8	1 to ⅞	2⅛	13,080	

1. Allowable loads shown are based on AISC 360 for A36 and A449 (HS) threaded rods.

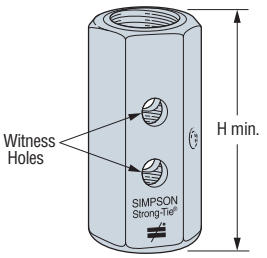

CNW
Allows Fast Visual Check for Correct All Thread Rod Installation

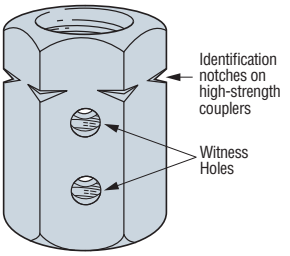

HSCNW
High-Strength Coupler Nut

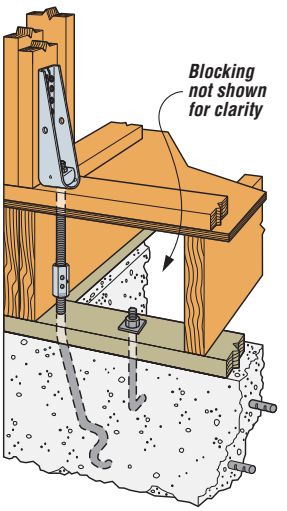

Typical CNW Rim Board Installation

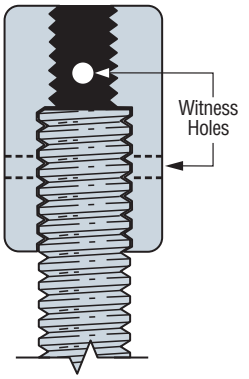

CNW
Transition Coupler Nut

C-C-2021 ©2021 SIMPSON STRONG-TIE COMPANY INC.

General Information and Notes

Holdowns and tension ties represent key components that comprise a continuous load path. In light-frame construction, holdowns are typically used to resist uplift due to shearwall overturning or wind uplift forces. In panelized roof construction, holdowns are used to anchor the concrete or masonry walls to the roof framing.

Holdowns can be separated into two categories — post-installed or cast-in-place. Cast-in-place holdowns, such as the STHD holdowns or the PA purlin anchors are installed at the time of concrete placement and attached to wood framing with nails. Cast-in-place holdowns are an economical anchorage solution with allowable loads up to 5,300 lb.

After the concrete has been placed, post-installed holdowns are attached to anchor bolts during wall framing. They are attached to the wood framing with nails, Strong-Drive® SD Connector screws and Strong-Drive SDS Heavy-Duty Connector screws or bolts. Post-installed holdowns have have allowable loads ranging from about 850 lb. up to nearly 20,000 lb.

The Post-to-Foundation Designer is a quick way to specify a holdown and the applicable anchorage to meet your project design requirements. Visit **app.strongtie.com/pfd**.

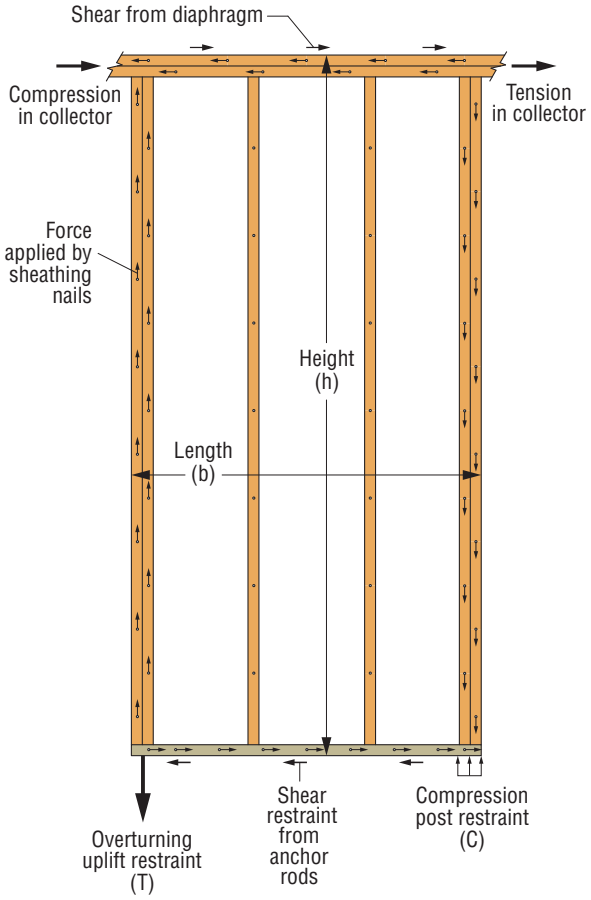

Idealized Force Diagram on Full-Height Shearwall Segment
(sheathing not shown)

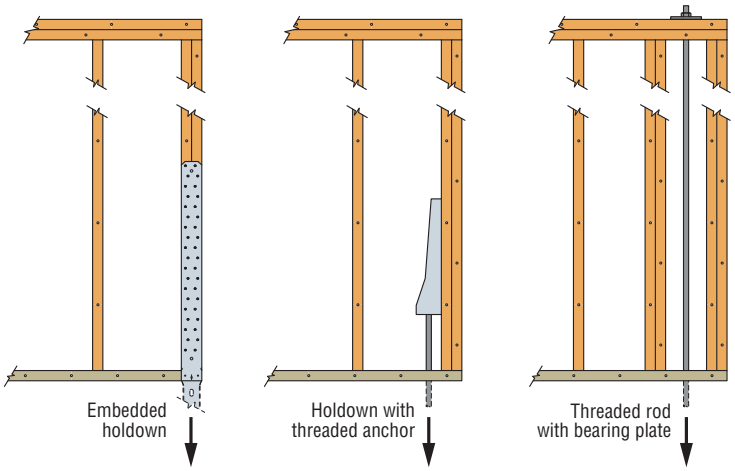

Methods of Providing Overturning Restraint

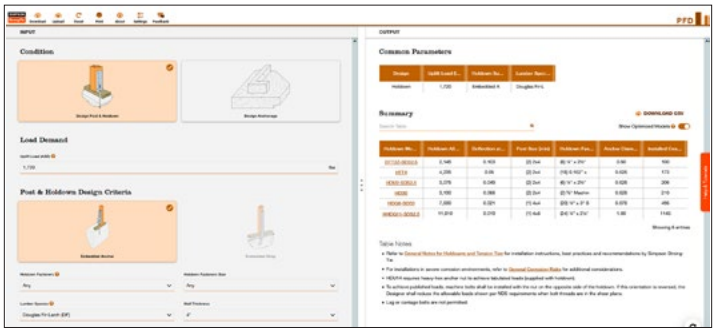

Post-to-Foundation Designer
app.strongtie.com/pfd

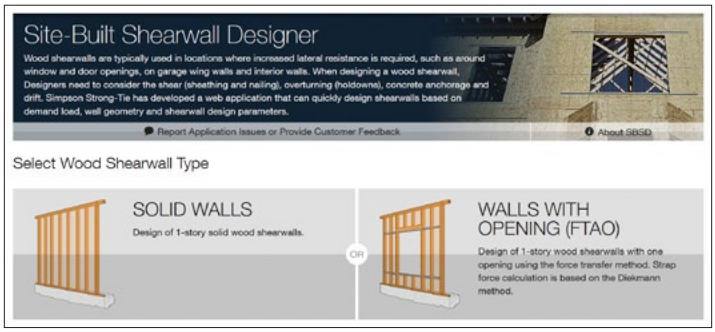

Site-Built Shearwall Designer
strongtie.com/webapps/sitebuiltshearwalldesigner

C-C-2021 ©2021 SIMPSON STRONG-TIE COMPANY INC.

General Information and Notes (cont.)

Holdown and Tension Tie General Notes:

a. Allowable loads have been increased for earthquake or wind load durations with no further increase allowed. Reduce where other loads govern.

b. To obtain LRFD values for cast-in-place holdowns (STHD and PA), multiply ASD seismic load values by 1.43 and wind load values by 1.67. For post-installed holdowns, multiply allowable loads by 1.4. See evaluation reports for LRFD deflections.

c. Use all specified fasteners.

d. The designer must specify anchor bolt type, length and embedment. See pp. 32–34 and 36–39 for SB and SSTB anchor bolts and pp. 42–43 for PAB anchor bolts. See pp. 44–45 for anchor recommendations for each holdown.

e. Simpson Strong-Tie® Anchor Designer is available for quick and easy design of anchors for wind and seismic conditions as well as cracked and uncracked concrete. See **strongtie.com/anchordesigner**.

f. Anchor bolt nut should be finger tight plus ⅓ to ½ turn with a hand wrench, with consideration given to possible future wood shrinkage. Care should be taken not to over-tighten the nut. Impact wrenches should not be used.

g. Post or beam by designer. Minimum no. 2 or better unless noted otherwise. Tabulated loads are based on installation into the wide face of a minimum 3½" wide solid or built-up post or beam (in a 3½" wall), unless noted otherwise. Posts may consist of multiple members provided they are connected independently of the holdown fasteners. See **strongtie.com/posts** for common post allowable loads.

h. Holdowns are for use in vertical or horizontal applications.

i. Tension values are valid for holdowns installed flush or raised off the sill plate.

j. Defection at Allowable Tension Load is determined by testing on wood posts and includes fastener slip, holdown deformation and anchor rod elongation for holdowns installed 6" above top of concrete (4½" for HTT). Holdowns may be installed any height above top of concrete without load reduction provided that additional elongation of the anchor rod is accounted for. Holdown deflections may be linearly reduced for design loads less than the allowable load.

k. To accommodate a 1½" max. offset anchor bolt, holdowns may be installed raised up to 18" above the top of concrete with no load reduction provided that additional elongation of the anchor rod is accounted for.

l. Tabulated loads for bolted holdowns may be doubled when holdowns are installed on opposite sides of the wood member. Designer must evaluate the allowable load of the wood member and the anchorage.

m. Tabulated loads for nailed or screwed holdowns may be doubled when holdowns are installed on opposite sides of the wood member. Member must be thick enough to prevent opposing holdown fastener interference or the holdowns are offset to eliminate fastener interference. Designer must evaluate the allowable load of the wood member and the anchorage. See **strongtie.com/posts** for common post allowable loads.

n. Structural composite lumber columns have sides that show either the wide face or the edges of the lumber strands/veneers known as the narrow face. Values in the tables reflect installation into the wide face. See technical bulletin T-C-SCLCLM at **strongtie.com** for load reductions due to narrow face installations.

o. Some holdown models are available in stainless steel. Refer to engineering letter L-C-SSHD for stainless-steel holdown allowable loads.

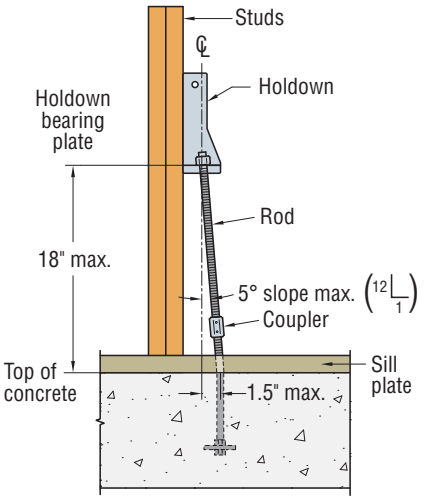

Holdown Raised Off Sill Plate

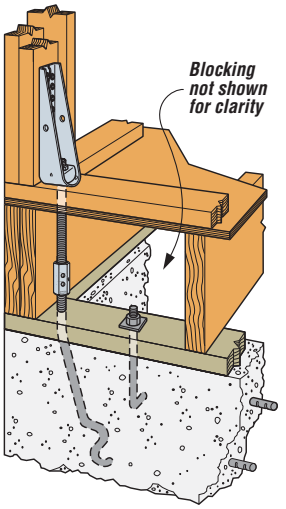

Holdown on Raised Floor Foundation

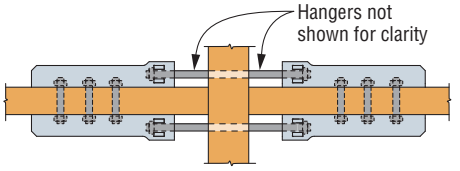

Plan View

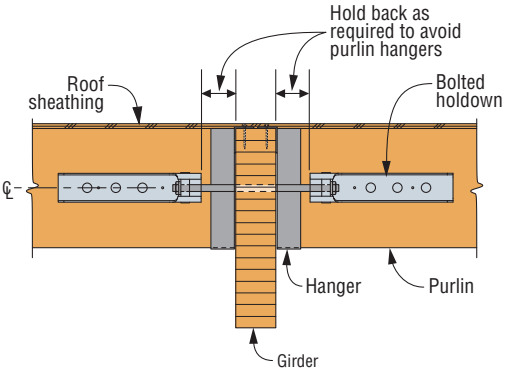

Elevation View

Purlin-to-Purlin Cross-Tie Detail

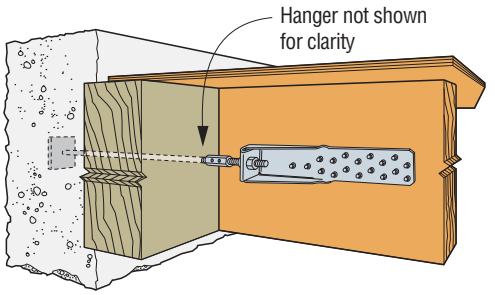

Horizontal HTT Installation

C-C-2021 ©2021 SIMPSON STRONG-TIE COMPANY INC.

HDQ8/HHDQ

Holdowns

The HHDQ series of holdowns combines low deflection and high loads with ease of installation. The unique seat design of the HDQ8 greatly minimizes deflection under load. Both styles of holdown employ the Strong-Drive® SDS Heavy-Duty Connector screws which install easily, reduce fastener slip and provide a greater net section when compared to bolts. They may be installed either flush or raised off the mudsill without a reduction in load value.

Special Features:

- Strong-Drive SDS Heavy-Duty Connector screws are supplied with the holdowns to ensure proper fasteners are used
- No stud bolts to countersink at openings

Material: HDQ8 — 7 gauge; HHDQ — body: 7 gauge, washer: ½" plate

Finish: HDQ8 — galvanized; HHDQ — Simpson Strong-Tie gray paint; HHDQ11 — available in stainless steel

Installation:

- See Holdown and Tension Tie General Notes on pp. 49–50
- No additional washer is required
- Strong-Drive SDS Heavy-Duty Connector screws install best with a low-speed high-torque drill with a ⅜" hex-head driver

HHDQ11 / HHDQ14:

- No additional washer is required
- HHDQ14 requires a heavy-hex anchor nut (supplied with holdown)

Codes: See p. 11 for Code Reference Key Chart

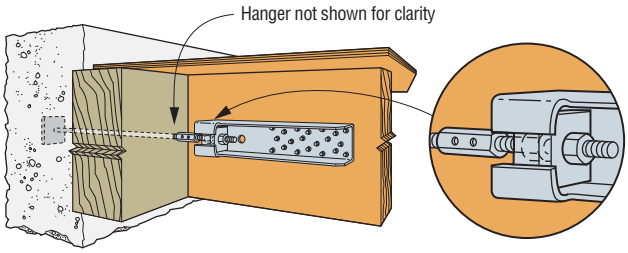

Horizontal HDQ8 Installation

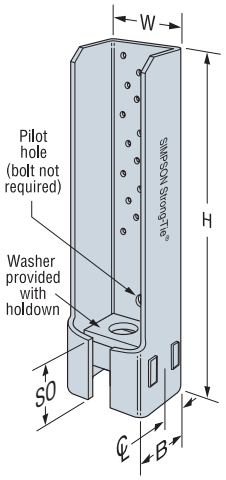

HDQ8

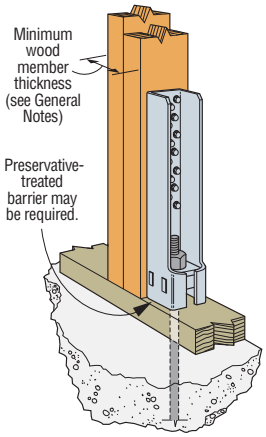

HDQ8 Vertical Installation

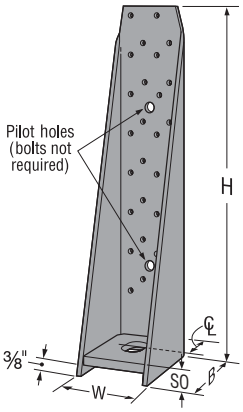

HHDQ11
(HHDQ14 similar)

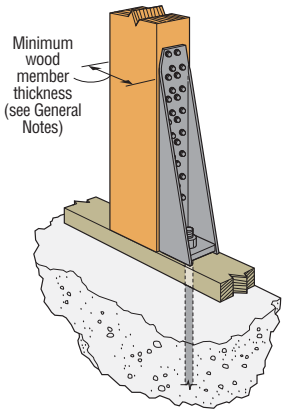

Vertical HHDQ11 Installation
(HHDQ14 similar)

Not sure you have the right holdown?

The Post-to-Foundation Designer is a quick way to specify a holdown and the applicable anchorage to meet your project design requirements. Visit **app.strongtie.com/pfd**.

These products are available with additional corrosion protection. For more information, see p. 14.

SS For stainless-steel fasteners, see p. 21.

Model No.	Ga.	Dimensions (in.)					Fasteners		Minimum Wood Member Size (in.)	Allowable Tension Loads (160)			Code Ref.
		W	H	B	CL	SO	Anchor Bolt Dia. (in.)	SDS Screws		DF/SP	SPF/HF	Deflection at Allowable Load (in.)	
HDQ8-SDS3	7	2⅞	14	2½	1¼	2⅜	⅞	(20) ¼" x 3"	3 x 3½	5,715	4,915	0.073	IBC, FL, LA
								(20) ¼" x 3"	3½ x 3½	7,630	6,560	0.091	
								(20) ¼" x 3"	3½ x 4½	9,230	7,020	0.095	
SS HHDQ11-SDS2.5	7	3	15⅛	3½	1½	⅞	1	(24) ¼" x 2½"	3½ x 5½	11,810	8,425	0.131	
HHDQ14-SDS2.5	7	3	18¾	3½	1½	⅞	1	(30) ¼" x 2½"	3½ x 7¼	13,015	10,530	0.107	
									5½ x 5½	13,710	10,530	0.107	

1. HHDQ14 requires a heavy-hex anchor nut (supplied with holdown).
2. HDQ and HHDQ installed horizontally achieve compression loads with the addition of a standard nut on the underside of the load transfer plate. Refer to ICC-ES ESR-2330 for design values. HDQ8 requires a standard nut and BP 7/8-2 load washer (sold separately) on the underside of the holdown for compression load. Design of anchorage rods for compression force shall be per the designer.
3. **Fasteners:** SDS screws are Simpson Strong-Tie® Strong-Drive SDS Heavy-Duty Connector screws. See pp. 21–22 for fastener information.

C-C-2021 ©2021 SIMPSON STRONG-TIE COMPANY INC.

HDU/DTT

Holdowns

This product is preferable to similar connectors because of (a) easier installation, (b) higher loads, (c) lower installed cost, or a combination of these features.

HDU holdowns are pre-deflected during the manufacturing process, virtually eliminating deflection under load due to material stretch. They use Strong-Drive® SDS Heavy-Duty Connector screws which install easily, reduce fastener slip and provide a greater net section when compared to bolts.

The DTT tension ties are designed for lighter-duty holdown applications on single 2x posts. The DTT1Z is installed with nails or Strong-Drive SD Connector screws and the DTT2 installs easily with the Strong-Drive SDS Heavy-Duty Connector screws (included). The DTT1Z holdowns have been tested for use in designed shearwalls and prescriptive braced wall panels as well as prescriptive wood-deck applications (see p. 295 for deck applications).

For more information on holdown options, contact Simpson Strong-Tie.

HDU Features:

- Uses Strong-Drive SDS Heavy-Duty Connector screws which install easily, reduce fastener slip and provide a greater net section area of the post compared to bolts
- Strong-Drive SDS Heavy-Duty Connector screws are supplied with the holdowns to ensure proper fasteners are used
- No stud bolts to countersink at openings

Material: See table

Finish: HDU — galvanized; DTT1Z and DTT2Z — ZMAX® coating; DTT2SS — stainless steel

Installation:

- See Holdown and Tension Tie General Notes on pp. 49–50.
- The HDU requires no additional washer; the DTT requires a standard-cut washer (included) be installed between the nut and the seat.
- Strong-Drive SDS Heavy-Duty Connector screws install best with a low-speed high-torque drill with a ⅜" hex-head driver.
- Fasteners and crescent washer are included with the holdowns. For replacements, order part no. SDS25212-HDU_. (Fill in the size needed, e.g., HDU2.)

Codes: See p. 11 for Code Reference Key Chart

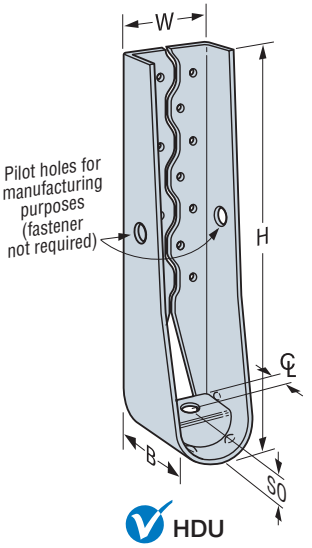

HDU

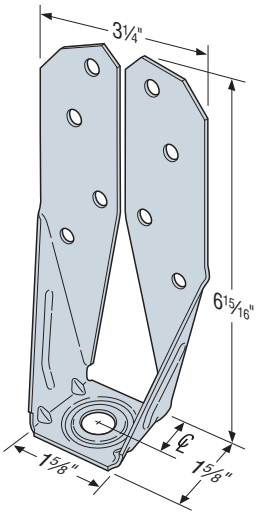

DTT2Z
US Patent
8,555,580

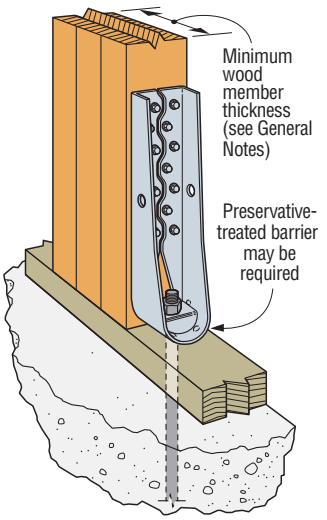

Vertical HDU Installation

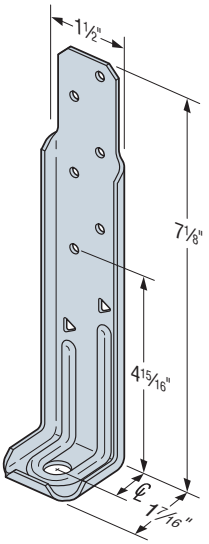

DTT1Z
US Patent
10,865,558

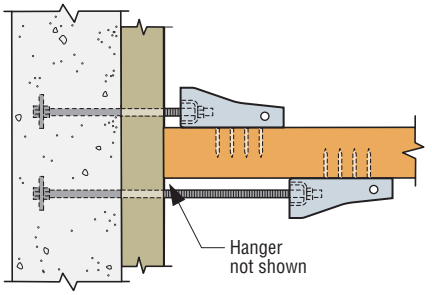

Horizontal HDU Offset Installation
(plan view)
See Holdown and Tension Tie General Notes.

C-C-2021 ©2021 SIMPSON STRONG-TIE COMPANY INC.

Holdowns (cont.)

These products are available with additional corrosion protection. For more information, see p. 14.

SS For stainless-steel fasteners, see p. 21.

SD Many of these products are approved for installation with Strong-Drive® SD Connector screws. See pp. 348–352 for more information.

Model No.	Ga.	Dimensions (in.)					Fasteners (in.)		Minimum Wood Member Size (in.)	Allowable Tension Loads (160)			Code Ref.
		W	H	B	CL	SO	Anchor Bolt Dia. (in.)	Wood Fasteners		DF/SP	SPF/HF	Deflection at Allowable Load (in.)	
DTT1Z	14	1½	7⅛	1⁷⁄₁₆	¾	³⁄₁₆	⅜	(6) #9 x 1½" SD	1½ x 5½	840	840	0.17	IBC, FL, LA
								(6) 0.148 x 1½		910	640	0.167	
								(8) 0.148 x 1½		910	850	0.167	
SS DTT2Z	14	3¼	6¹⁵⁄₁₆	1⅝	¹³⁄₁₆	³⁄₁₆	½	(8) ¼ x 1½ SDS	1½ x 3½	1,825	1,800	0.105	
								(8) ¼ x 1½ SDS	3 x 3½	2,145	1,835	0.128	
SS DTT2Z-SDS2.5								(8) ¼ x 2½ SDS	3 x 3½	2,145	2,105	0.128	
HDU2-SDS2.5	14	3	8¹¹⁄₁₆	3¼	1⁵⁄₁₆	1⅜	⅝	(6) ¼ x 2½ SDS	3 x 3½	3,075	2,215	0.088	
HDU4-SDS2.5	14	3	10¹⁵⁄₁₆	3¼	1⁵⁄₁₆	1⅜	⅝	(10) ¼ x 2½ SDS	3 x 3½	4,565	3,285	0.114	
HDU5-SDS2.5	14	3	13³⁄₁₆	3¼	1⁵⁄₁₆	1⅜	⅝	(14) ¼ x 2½ SDS	3 x 3½	5,645	4,340	0.115	
HDU8-SDS2.5	10	3	16⅝	3½	1⅜	1½	⅞	(20) ¼ x 2½ SDS	3 x 3½	6,765	5,820	0.11	
									3½ x 3½	6,970	5,995	0.116	
									3½ x 4½	7,870	6,580	0.113	
HDU11-SDS2.5	10	3	22¼	3½	1⅜	1½	1	(30) ¼ x 2½ SDS	3½ x 5½	9,535	8,030	0.137	
									3½ x 7¼	11,175	9,610	0.137	
HDU14-SDS2.5	7	3	25¹¹⁄₁₆	3½	1⁹⁄₁₆	1⁹⁄₁₆	1	(36) ¼ x 2½ SDS	3½ x 5½	10,770	9,260	0.122	—
									3½ x 7¼	14,390	12,375	0.177	IBC, FL, LA
									5½ x 5½	14,445	12,425	0.172	

1. HDU14 requires heavy-hex anchor nut to achieve tabulated loads (supplied with holdown).
2. HDU14 loads on 4x6 post are applicable to installation on either the narrow or the wide face of the post.
3. **Fasteners:** Nail dimensions are listed diameter by length. SD and SDS screws are Simpson Strong-Tie® Strong-Drive SD Connector and SDS Heavy-Duty Connector screws. See pp. 21–22 for fastener information.

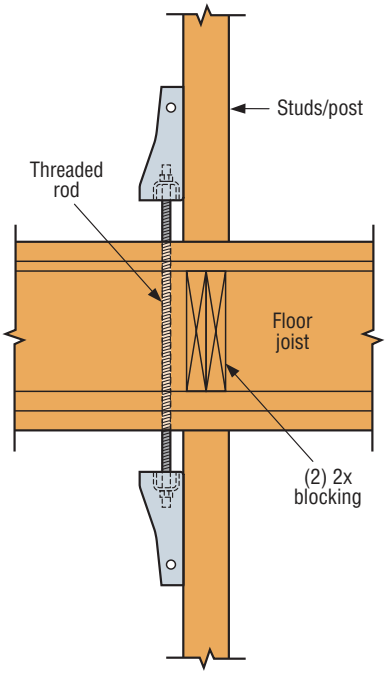

Typical HDU Tie Between Floors

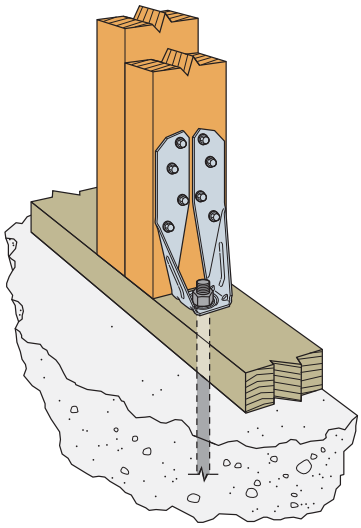

Typical DTT2Z Installation

C-C-2021 ©2021 SIMPSON STRONG-TIE COMPANY INC.

LTT/HTT

Tension Ties

Tension ties offer a solution for resisting tension loads that are fastened with nails or Strong-Drive® SD Connector screws. The new LTTP2 light tension tie, designed for wood joist attachments to concrete or masonry walls, features two separate nailing patterns: obround holes spaced 3" apart for I-joist purlins and square holes spaced to accommodate the narrow face of 2x solid-sawn purlins. LTTP2 may also be installed vertically on the wide face of a minimum 2x4 stud for holdown application. It features an extruded anchor bolt hole to accommodate ¾", ⅝" and ½" bolt diameters.

The LTTI31 is designed for wood chord open-web truss attachments to concrete or masonry walls and may also be installed vertically on a minimum 2x6 stud.

The HTT4 and HTT5 tension ties feature an optimized nailing pattern which results in better performance with less deflection. HTT5KT is sold as a kit with the holdown, bearing plate washer and Strong-Drive SD Connector screws.

The HTT5-¾ is designed to use a ¾"-diameter anchor bolt.

When using LTT or HTT tension ties with unreinforced concrete masonry, ¾" post-installed anchor bolts are commonly used.

Material: See table

Finish: Galvanized. May be ordered HDG; contact Simpson Strong-Tie.

Installation:

- See Holdown and Tension Tie General Notes on pp. 49–50.
- LTTP2 — one standard cut-washer is required when using ½" and ⅝" anchor bolts; and no additional washer is required for ¾" anchor bolts.
- LTTP2 — For installations on narrow edge of solid sawn (2x, 3x) joists use (15) square holes; for all other installations use (12) obround holes.
- For tension ties installed over wood structural panel sheathing, use a 2½"-long fastener minimum.
- For information about marriage strap at panelized roof applications, see **strongtie.com**.
- HTT5-KT requires BP 5/8-2 bearing plate and #10 x 2½" SD Strong-Drive screws (included in kit).

Codes: See p. 11 for Code Reference Key Chart

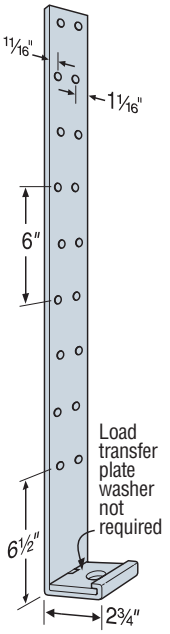

LTTI31

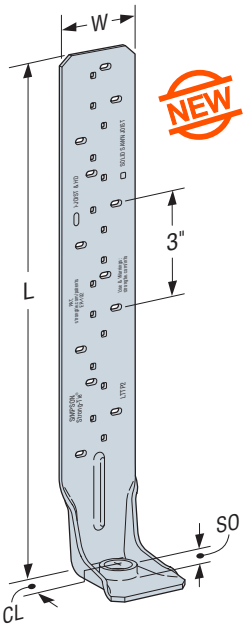

LTTP2
US Patent Pending

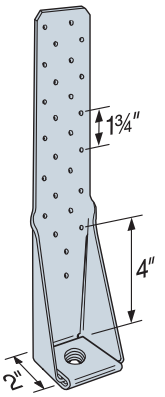

HTT5
(HTT4 similar)

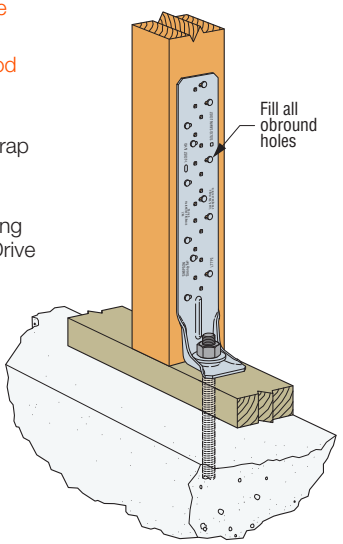

Typical LTTP2 Installation for Holdown Application

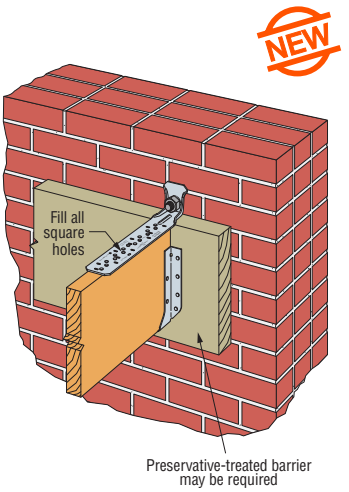

Typical LTTP2 Installation for Solid Sawn Joist

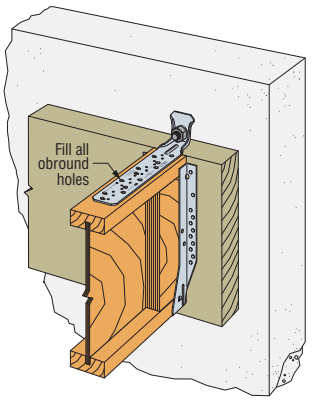

Typical LTTP2 Installation for I-joist

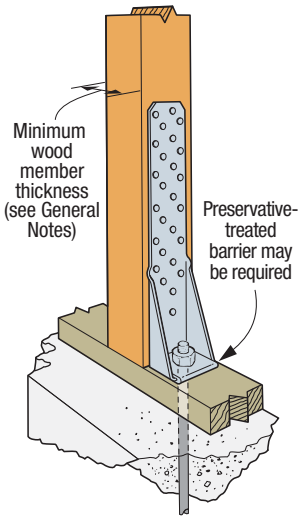

Vertical HTT5 Installation
(HTT4 similar)

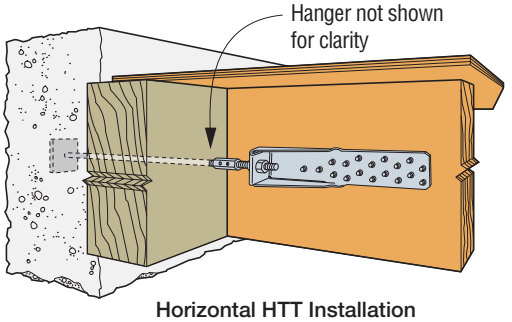

Horizontal HTT Installation

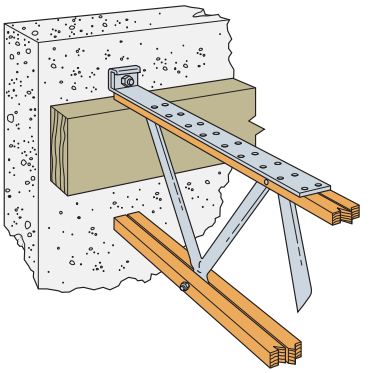

Horizontal LTTI31 Installation

C-C-2021 ©2021 SIMPSON STRONG-TIE COMPANY INC.

Tension Ties (cont.)

These products are available with additional corrosion protection. For more information, see p. 14.

SD Many of these products are approved for installation with Strong-Drive® SD Connector screws. See pp. 348–352 for more information.

Model No.	Ga.	Dimensions (in.) W	Dimensions (in.) L	Dimensions (in.) CL	SO (in.)	Fasteners (in.) Anchor Rod Diameter	Fasteners (in.) Wood Fasteners	Minimum Wood Member Size (in.)	Allowable Tension Loads (160) DF/SP	Allowable Tension Loads (160) SPF/HF	Deflection at Highest Allowable Load (in.)	Code Ref.
LTTP2	10	2 9/16	14 15/16	1 1/8	7/16	½, ⅝, ¾	(15) 0.148 x 2½	1½ x 3½ (narrow edge)[4,5]	1,845	1,695	0.104	IBC, FL, LA
						½	(12) 0.148 x 1½	1½ x 3½	1,680[6]	1,545[6]	0.138	
						⅝, ¾			2,135	1,965	0.112	
						½	(12) #9 x 1½" SD	1½ x 3½	2,320	1,970	0.112	
						⅝, ¾			2,570	2,045	0.136	
						½, ⅝, ¾	(12) 0.148 x 2½	3 x 3½	2,275	2,230	0.128	
LTTI31	18	3¾	31	1 3/8	¼	⅝	(18) 0.148 x 1½	3 x 3½	1,350	1,160	0.193	
HTT4	11	2½	12 3/8	1 5/16	7/16	⅝	(18) 0.148 x 1½	1½ x 3½	3,000	2,580	0.090	—
							(18) 0.148 x 1½	3 x 3½	3,610	3,105	0.086	IBC, FL, LA
							(18) 0.162 x 2½	3 x 3½	4,235	3,640	0.123	
							(18) #10 x 1½" SD	1½ x 5½	4,455	3,830	0.112	—
							(18) #10 x 1½" SD	3 x 3½	4,455	3,830	0.112	
HTT5	11	2½	16	1 7/16	7/16	⅝	(26) 0.148 x 1½	3 x 3½	4,350	3,740	0.120	IBC, FL, LA
							(26) 0.148 x 3	3 x 3½	4,670	4,015	0.116	
							(26) 0.162 x 2½	3 x 3½	5,090	4,375	0.135	
							(26) #10 x 1½" SD	1½ x 5½	4,555	3,915	0.114	—
HTT5KT	11	2½	16	1 7/16	7/16	⅝	(26) #10 x 2½" SD	3 x 3½	5,445	5,360	0.103	
HTT5-3/4	11	2½	16	1 7/16	7/16	¾	(26) 0.148 x 1½	1½ x 5½	4,065	3,495	0.103	IBC, FL
							(26) 0.162 x 2½	3 x 3½	5,090	4,375	0.121	
							(26) #10 x 1½" SD	1½ x 7¼	4,830	4,155	0.100	

1. LTTI31 installed flush with concrete or masonry has an allowable load of 2,285 lb.
2. Allowable load for HTT5 with a BP5/8-2 bearing-plate washer installed in the seat of the holdown is 5,295 lb. for DF/SP and 4,555 lb. for SPF/HF.
3. For LTTP2, standard cut washer is required when using ½" and ⅝" anchor rods.
4. For (15) nail installations on narrow edge of 2x4 (minimum) joist, LTTP2 installed flush with concrete or masonry has an allowable load of 2,560 lb. for DF/SP and 2,355 lb. for SPF/HF.
5. LTTP2 installed with (15) #9 x 1½" SD screws on narrow edge of 2x joist has an allowable load of 2,105 lb. for DF/SP and 1,935 lb. for SPF/HF.
6. For (12) nail installations on I-joist or wide face of 2x member, LTTP2 installed flush with concrete or masonry has an allowable load of 1,950 lb. for DF/SP and 1,795 lb. for SPF/HF.
7. **Fasteners:** Nail dimensions are listed diameter by length. SD screws are Simpson Strong-Tie® Strong-Drive SD Connector screws. See pp. 21–22 for fastener information.

Table 1 — Anchorage Selection Guide for Holdowns Attached to DF/SP Lumber

Holdown on DF/SP Lumber	Stemwall: Stemwall Width (in.)	Stemwall: Wind and Seismic Design Category A&B: Midwall/Corner	Stemwall: Wind and Seismic Design Category A&B: End Wall	Stemwall: Seismic Design Category C–F: Midwall/Corner	Stemwall: Seismic Design Category C–F: End Wall	Slab on Grade: Wind and Seismic Design Category A&B: Midwall/Corner	Slab on Grade: Wind and Seismic Design Category A&B: Garage Curb	Slab on Grade: Seismic Design Category C–F: Midwall/Corner	Slab on Grade: Seismic Design Category C–F: Garage Curb
HDU2	6	SSTB16		SSTB24		SSTB16		SSTB16	SSTB20* (2,960)
HDU4	6	SB5/8X24		SB5/8X24		SSTB16	SB5/8X24	SSTB20	SB5/8X24
HDU5	6	SB5/8X24		SB5/8X24		SSTB20	SB5/8X24	SSTB24	SB5/8X24
HDU8									
HD8									
HDU11									
HHDQ11									
HDU14									
HHDQ14									
LTTP2									
LTTI31									
HTT4									
HTT5									
HD3B									
HD5B									
HD7B									
HD9B									
HD12									

See footnotes be

Table 2 — Anchorage Selection Guide for Holdowns Attached to SPF/HF Lumber

Holdown on SPF/HF Lumber	Stemwall: Stemwall Width (in.)	Stemwall: Wind and Seismic Design Category A&B: Midwall/Corner	Stemwall: Wind and Seismic Design Category A&B: End Wall	Stemwall: Seismic Design Category C–F: Midwall/Corner	Stemwall: Seismic Design Category C–F: End Wall	Slab on Grade: Wind and Seismic Design Category A&B: Midwall/Corner	Slab on Grade: Wind and Seismic Design Category A&B: Garage Curb	Slab on Grade: Seismic Design Category C–F: Midwall/Corner	Slab on Grade: Seismic Design Category C–F: Garage Curb
HDU2	6	SSTB16		SSTB16		SSTB16		SSTB16	
HDU4	6	SSTB16		SSTB24		SSTB16		SSTB16	SSTB24
HDU5	6	SSTB24* (4,295)		SB5/8X24		SSTB16	SSTB24* (4,295)	SSTB20	SB5/8X24
HDU8	8	SSTB28		SSTB28	SSTB28* (6,395)	SSTB28		SSTB28	SSTB28
HDQ8	8	SSTB28		SSTB28	SSTB28* (6,395)	SSTB28		SSTB28	SSTB28
HDU11	8	SB1X30* (9,505)	PAB8	PAB8	PAB8	SB1x30		SB1x30	
HHDQ11	8	SB1X30	PAB8	PAB8					
HDU14	—	PAB8		PAB8		SB1x30		SB1x30	
HHDQ14	—								
LTTP2	6	SSTB16		SSTB16		SSTB16		SSTB16	
LTTI31	6								
HTT4	6	SSTB20		SB5/8X24		SSTB16	SSTB20	SSTB16* (3,780)	SB5/8X24
HTT5	6	SB5/8X24		SB5/8X24		SSTB20	SB5/8X24	SSTB24	SB5/8X24
HD3B	6	SSTB16		SSTB24		SSTB16		SSTB16	SSTB20* (2,960)

We've made selecting the right anchor bolt for the holdown easier. Check out our Holdown Anchorage Solutions table on p. 44 or the Post-to-Foundation Designer at app.strongtie.com/pfd.

C-C-2021 ©2021 SIMPSON STRONG-TIE COMPANY INC.

HDB/HD

Holdowns

Simpson Strong-Tie offers a wide variety of bolted holdowns offering low-deflection performance for a range of load requirements.

The HD3B is a light-duty holdown designed for use in shearwalls and braced-wall panels, as well as other lateral applications.

The HD5B, HD7B and HD9B bolted holdowns incorporate the proven design of our HDQ8 SDS-style holdown and feature a unique seat design which greatly minimizes deflection under load. HDB and HD holdowns are self-jigging, ensuring that the code-required minimum of seven bolt diameters from the end of the post is met. They can be installed directly on the sill plate or raised above it and are suitable for back-to-back applications where eccentricity is a concern. HDBs and HDs are designed to provide loads for intermediate-load-range shearwalls, braced-wall panels and lateral applications.

Material: See table

Finish: HD3B/HD5B/HD7B/HD9B — Galvanized;
HD — Simpson Strong-Tie gray paint; HDG available.
For stainless steel options, see engineering letter L-C-SSHD at **strongtie.com**.

Installation:

- See Holdown and Tension Tie General Notes on pp. 49–50
- Bolt holes shall be a minimum of 1/32" to a maximum of 1/16" larger than the bolt diameter (per 2015/2018 NDS, section 12.1.3.2)
- Stud bolts should be snugly tightened with standard cut washers between the wood and nut (BPs are required in the City and County of Los Angeles)
- HD and HDB holdowns are self-jigging and will ensure minimum bolt end distance when installed flush with the sill plate
- Standard cut washer is required under the anchor nut for HD12 with 1" anchor and HD19 with 1⅛" anchors

Codes: See p. 11 for Code Reference Key Chart

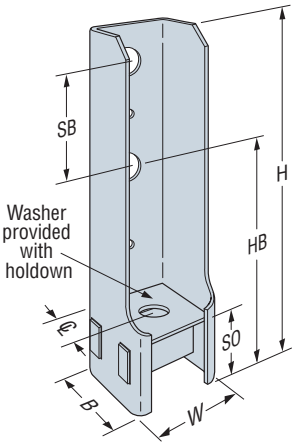

HD5B
(HD7B and HD9B similar)

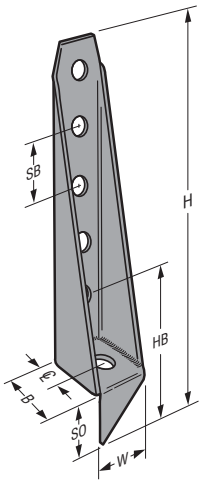

HD19
(HD12 similar)

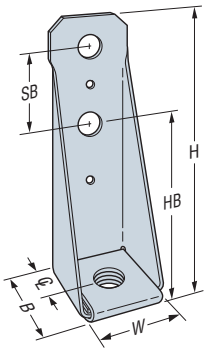

HD3B

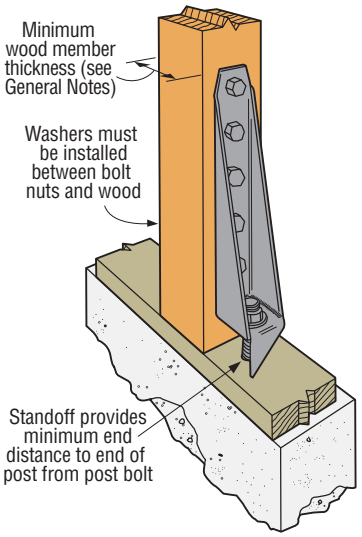

Vertical HD19 Installation

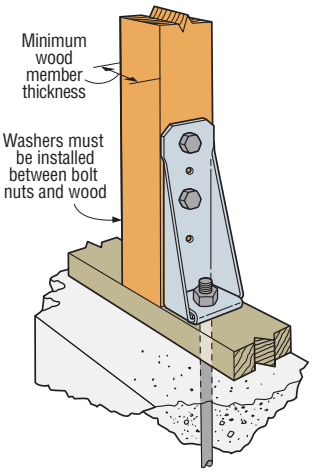

Vertical HD3B Installation

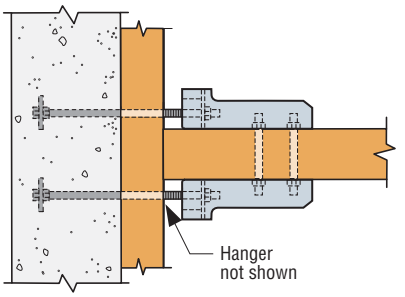

Horizontal HDB Installation
(plan view)

C-C-2021 ©2021 SIMPSON STRONG-TIE COMPANY INC.

Holdowns (cont.)

These products are available with additional corrosion protection. For more information, see p. 14.

Model No.	Material		Dimensions (in.)							Fasteners (in.)		Minimum Wood Member Size (in.)	Allowable Tension Loads (160)		Deflection at Highest Allowable Load	Code Ref.
	Base (in.)	Body (ga.)	HB	SB	W	H	B	CL	SO	Anchor Dia. Bolt	Stud Bolts		DF/SP	SPF/HF		
HD3B	—	12	4¾	2½	2½	8⅝	2¼	1 5/16	⅜	⅝	(2) ⅝	1½ x 3½	1,895	1,610	0.156	IBC, FL, LA
												2½ x 3½	2,525	2,145	0.169	
												3 x 3½	3,130	3,050	0.12	
												3½ x 3½	3,130	3,050	0.12	
HD5B	3/16	10	5¼	3	2½	9⅜	2½	1¼	2	⅝	(2) ¾	1½ x 3½	2,405	2,070	0.153	
												2½ x 3½	3,750	3,190	0.129	
												3 x 3½	4,505	3,785	0.156	
												3½ x 3½	4,935	4,195	0.15	
HD7B	3/16	10	5¼	3	2½	12⅜	2½	1¼	2	⅞	(3) ¾	3 x 3½	6,645	5,650	0.142	
												3½ x 3½	7,310	6,215	0.154	
												3½ x 4½	7,345	6,245	0.155	
HD9B	⅜	7	6⅛	3½	2⅞	14	2½	1¼	2⅜	⅞	(3) ⅞	3½ x 3½	7,740	6,580	0.159	
												3½ x 4½	9,920	8,430	0.178	
												3½ x 5½	9,920	8,430	0.178	
												3½ x 7¼	10,035	8,530	0.179	
HD12	⅜	3	7	4	3½	20 5/16	4¼	2⅛	3⅝	1	(4) 1	3½ x 3½	11,350	9,215	0.171	
												3½ x 4½	12,665	10,765	0.171	
												5½ x 5½	14,220	12,085	0.162	
										1⅛	(4) 1	3½ x 3½	11,775	9,215	0.171	
												3½ x 4½	13,335	11,055	0.177	
												3½ x 7¼	15,435	13,120	0.194	
												5½ x 5½	15,510	12,690	0.162	
HD19	⅜	3	7	4	3½	24½	4¼	2⅛	3⅝	1⅛	(5) 1	3½ x 7¼	16,735	14,225	0.191	
												5½ x 5½	16,775	12,690	0.2	
										1¼	(5) 1	3½ x 7¼	19,360	15,270	0.18	
												5½ x 5½	19,070	16,210	0.137	

1. To achieve published loads, machine bolts shall be installed with the nut on the opposite side of the holdown. If this orientation is reversed, the designer shall reduce the allowable loads shown per NDS requirements when bolt threads are in the shear plane.
2. All references to bolts are for structural quality through bolts (not lag screw or carriage bolts) equal to or better than ASTM A307, Grade A.
3. HD19 with 1¼" anchor rod requires No.1 post (or better) to achieve published loads.

C-C-2021 ©2021 SIMPSON STRONG-TIE COMPANY INC.

LSTHD/STHD

Strap-Tie Holdowns

This product is preferable to similar connectors because of (a) easier installation, (b) higher loads, (c) lower installed cost, or a combination of these features.

The STHD is an embedded strap-tie holdown offering high load and a staggered nail pattern to help minimize splitting. The STHD incorporates many features that aid correct installation and improve performance. When installed on the forms with the StrapMate® strap holder the unique design of the STHD delivers enhanced stability before and during the pour to help prevent both parallel and perpendicular movement (relative to the form). This results in accurate positioning of the strap and reduced possibility of spalling.

Features

- The pattern allows for nailing to the edges of double 2x's
- Strap nail slots are countersunk to provide a lower nail head profile
- The slots below the embedment line enable increased front-to-back concrete bond and help to reduce spalling
- Rim joist (RJ) models accommodate up to a 17" clear span without any loss of strap nailing

Material: LSTHD8, LSTHD8RJ — 14 gauge; all others — 12 gauge

Finish: Galvanized

Installation:

- See Holdown and Tension Tie General Notes on pp. 49–50.
- Use tables for both standard concrete and post-tension slab installations.
- Install before concrete pour with a StrapMate, or other holding device.
- Nail strap from the bottom up. Install strap plumb.
- Strap may be bent one full cycle (bent horizontal 90° then bent vertical) to aid wall placement, but may cause spalling behind the strap. If the spall is 1" or less, measured from the embedment line to the bottom of the spall, full loads apply. 1" to 4" spalls for LSTHD8 achieve 0.9 times table loads. STHD10 and STHD14 achieve full load for spalls less than 4". Any portion of the strap left exposed should be protected against corrosion.
- Other than where noted in the two-pour detail, do not install where: (a) A horizontal cold joint exists within the embedment depth between the slab and foundation wall or footing beneath, unless provisions are made to transfer the load, or the slab is designed to resist the load imposed by the anchor; or (b) Slabs are poured over concrete block foundation walls.
- Additional studs attached to the shearwall studs or post may be required by the designer for wall sheathing nailing.
- Wood shrinkage after strap installation across horizontal members may cause strap to buckle outward.
- For installations in severe corrosion environments, refer to **strongtie.com/cipcorrosion** for additional considerations.
- See installation illustrations on p. 60 for rebar information.

For Two-Pour Installation for Downturn Footings

- For STHD10 installed through a 4"-thick slab, use the equivalent 8"-stemwall loads of the LSTHD8
- For STHD14 installed through a 4"-thick slab, use the equivalent 8"-stemwall loads of the STHD10
- For STHD14 installed through a 6"-thick slab, use the equivalent 8"-stemwall loads of the LSTHD8

Codes: See p. 11 for Code Reference Key Chart

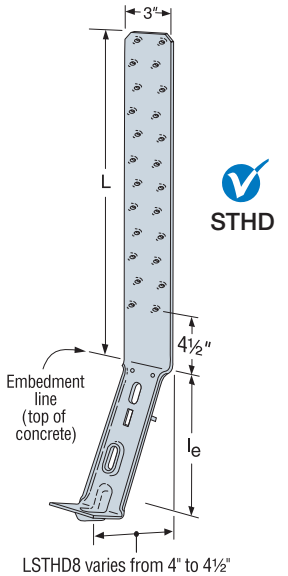

LSTHD8 varies from 4" to 4½"
STHD10, STHD14 varies from 4¾" to 5¼"

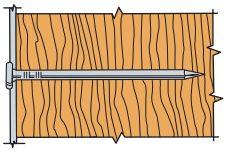

Nails are countersunk for a low-profile strap surface.

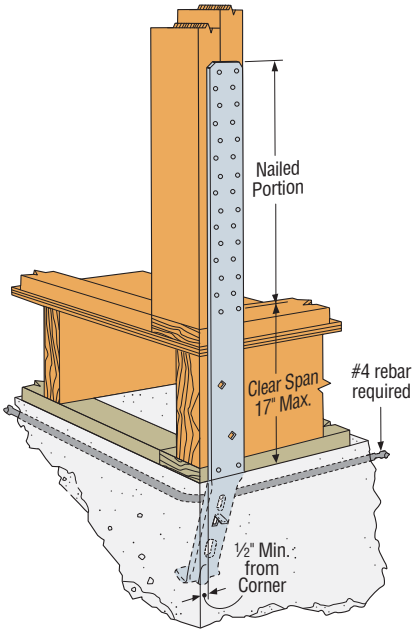

Typical STHD14RJ Rim Joist Application

C-C-2021 ©2021 SIMPSON STRONG-TIE COMPANY INC.

Strap-Tie Holdowns (cont.)

Tension Loads for STHD Installations

Min. Stemwall (in.)	Model No.		Strap Length (L)		l_e (in.)	Required Nails (in.)	Uncracked			Cracked			Code Ref.
	Standard	Rim Joist	Standard (in.)	Rim Joist (in.)			Midwall	Corner	Endwall	Midwall	Corner	Endwall	
Wind and SDC A&B – Allowable Tension Loads for DF/SP/SPF/HF (160)													
6	LSTHD8	LSTHD8RJ	18⅝	32⅛	8	(20) 0.148 x 3¼	2,985	2,590	1,620	2,565	2,225	1,395	IBC, FL
	STHD10	STHD10RJ	24⅝	38⅛	10	(24) 0.148 x 3¼	3,535	3,535	1,960	2,910	2,910	1,635	
	STHD14	STHD14RJ	26⅛	39⅝	14	(30) 0.148 x 3¼	4,935	4,935	3,065	4,935	4,935	3,065	
8	LSTHD8	LSTHD8RJ	18⅝	32⅛	8	(20) 0.148 x 3¼	2,985	2,590	2,135	2,565	2,225	1,835	
	STHD10	STHD10RJ	24⅝	38⅛	10	(28) 0.148 x 3¼	4,755	4,075	3,015	4,020	3,350	2,480	
	STHD14	STHD14RJ	26⅛	39⅝	14	(30) 0.148 x 3¼	5,285	5,285	4,410	5,285	5,285	4,410	
SDC C–F – Allowable Tension Loads for DF/SP/SPF/HF (160)													
6	LSTHD8	LSTHD8RJ	18⅝	32⅛	8	(16) 0.148 x 3¼	2,270	2,090	1,220	2,250	1,950	1,220	IBC, FL
	STHD10	STHD10RJ	24⅝	38⅛	10	(18) 0.148 x 3¼	2,750	2,750	1,615	2,550	2,550	1,435	
	STHD14	STHD14RJ	26⅛	39⅝	14	(22) 0.148 x 3¼	3,695	3,695	2,685	3,695	3,695	2,685	
8	LSTHD8	LSTHD8RJ	18⅝	32⅛	8	(16) 0.148 x 3¼	2,615	2,125	1,635	2,250	1,950	1,610	
	STHD10	STHD10RJ	24⅝	38⅛	10	(20) 0.148 x 3¼	3,400	2,940	2,295	3,400	2,940	2,175	
	STHD14	STHD14RJ	26⅛	39⅝	14	(24) 0.148 x 3¼	3,815	3,815	3,500	3,815	3,815	3,500	

1. Allowable loads have been increased for wind or earthquake loading with no further increase allowed. Reduce where other loads govern.
2. Concrete shall have a minimum compressive strength of f'_c = 2,500 psi.
3. 0.148" x 3" or 0.148" x 2 ½" nails may be used as a direct replacement for the required nails shown in the table with no load reduction when they are installed directly over framing or over ½" maximum structural sheathing.
4. Use the number of nails listed in the table or as otherwise specified. In many cases, not all nail holes will be filled. Nail strap from the bottom up.
5. Deflection at the highest allowable loads for installations over wood double studs is as follows: Installed on framing: LSTHD8 = 0.089", STHD10 = 0.117", and STHD14 = 0.118". Installed over ½" maximum structural sheathing: LSTHD8 = 0.114", STHD10 = 0.146", and STHD14 = 0.164".
6. To obtain LRFD values, multiply ASD seismic load values by 1.43 and wind load values by 1.67.
7. Per 2012, 2015, 2018 and 2021 IBC, Section 1613.1, detached one- and two-family dwellings in Seismic Design Category (SDC) C may use "Wind and SDC A&B" allowable loads.
8. Minimum center-to-center spacing is three times the required embedment, 3 x l_e, for STHD strap-tie holdowns acting in tension simultaneously. Midwall installation is based on 1.5 x l_e end distance.
9. See technical bulletin T-C-SCLCLM at **strongtie.com** for installation on structural composite lumber posts or columns.
10. For brick ledge applications, use full loads shown for STHD14 installed in 8" stem wall.
11. For slab-on-grade installation, use full loads shown for LSTHD/STHD installed in 8" stemwall.
12. **Fasteners:** Nail dimensions are listed diameter by length. See pp. 21–22 for fastener information.

Spall Reduction System for STHD Holdown

Features

- Built-in tab
- StrapMate® locator line
- Additional diamond hole in RJ versions

Benefits

Built-in Tab:

- Reduces spalling and costly retrofits
- No additional labor to install
- Holds STHD away from form board

StrapMate Locator Line:

- Easy inspection to ensure proper location
- Allows adjustment without removing STHD

Additional Diamond Hole:

- One more fastener to help prevent the STHD RJ models from bowing out at the rim joist section

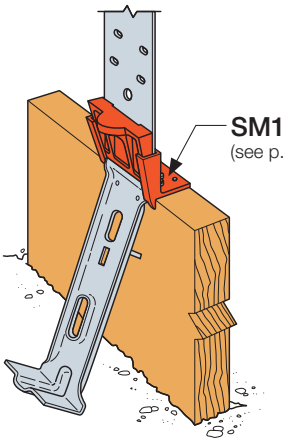

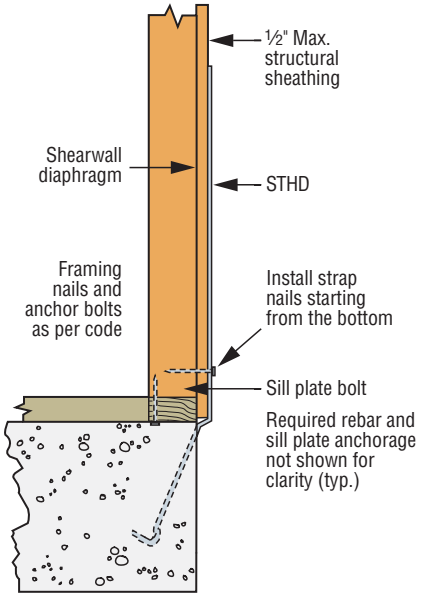

STHD over Shearwall Diaphragm

C-C-2021 ©2021 SIMPSON STRONG-TIE COMPANY INC.

LSTHD/STHD

Strap-Tie Holdowns (cont.)

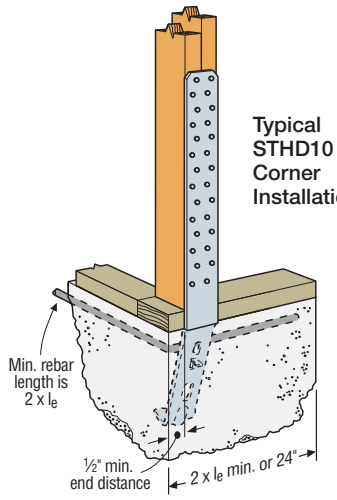

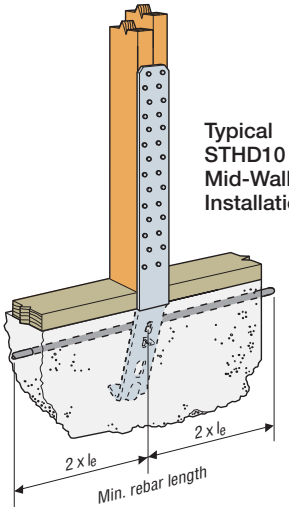

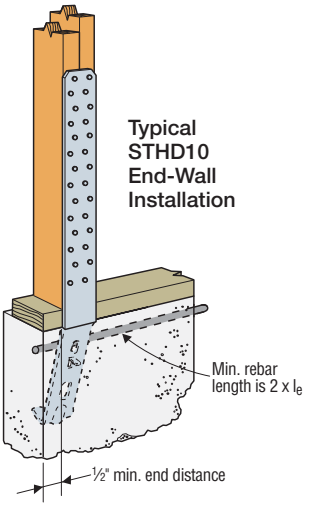

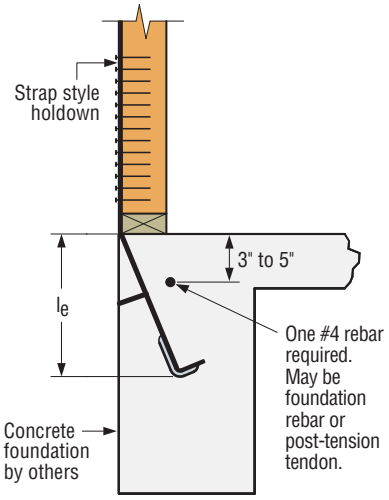

Single-Pour Rebar Installation
**Maintain minimum rebar cover, per ACI-318 concrete code requirements.*

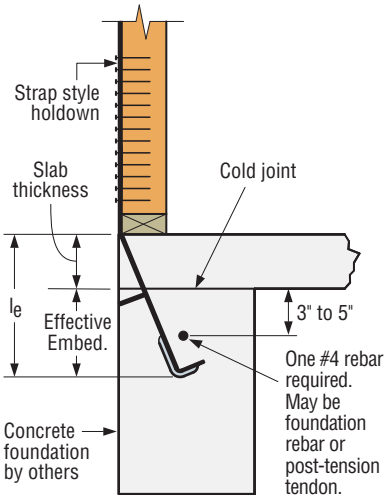

Two-Pour Installation for Downturn Footings

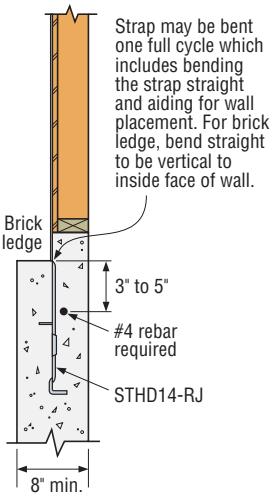

Brick-Ledge Installation with Step

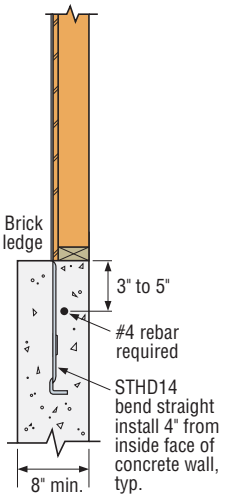

Brick-Ledge Installation Without Step

StrapMate®

Strap Holder

The StrapMate is designed to keep the STHD and LSTHD straps vertically aligned during the concrete pour to minimize possibility of spalling. The friction fit allows for quick and easy installation.

Features:

- The StrapMate is reusable
- Works with STHD, LSTHD
- Designed to fit ¾" plywood forms up to 1¾" LVL forms and larger
- The strap is positioned off the front edge of the form board

Material: Engineered composite plastic

Model No.	Nails (in.)
SM1	(2) 0.131 x 2½ Duplex

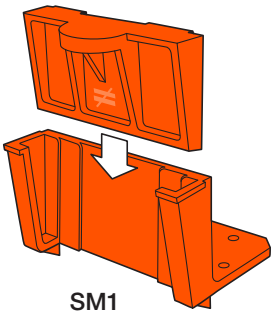

SM1
StrapMate Strap Holder

Alternate StrapMate Installation for Brick Ledges

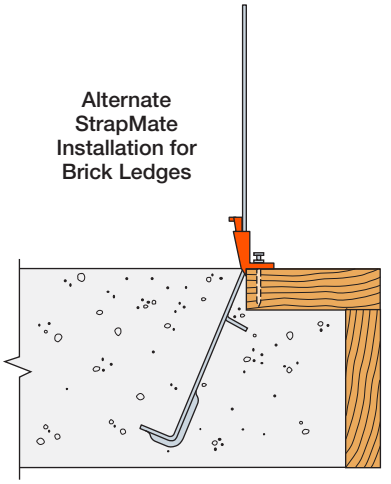

C-C-2021 ©2021 SIMPSON STRONG-TIE COMPANY INC.

PA

Strap-Tie Holdown

The PA strap-tie holdown is a wood-to-concrete connector that connects studs to the foundation to satisfy engineering and code requirements.

Material: 12 gauge

Finish: Galvanized or ZMAX® coating

Installation:

- Use all specified fasteners; see General Notes
- For additional length, an MST strap can be attached using ½" bolts through existing holes
- Visit **strongtie.com** for additional information

Codes: See p. 11 for Code Reference Key Chart

These products are available with additional corrosion protection. For more information, see p. 14.

SD Many of these products are approved for installation with Strong-Drive® SD Connector screws. See pp. 348–352 for more information.

Wind and SDC A&B – Allowable Tension Loads							
Model No.	Strap Length, L (in.)	l_e (in.)	Uncracked Concrete		Cracked Concrete		Code Ref.
			Required Nails (in.)	Tension	Required Nails (in.)	Tension	
PA51	51	4	(10) 0.148 x 3	2,025	(10) 0.148 x 3	2,025	IBC, FL
PA68	70	4	(10) 0.148 x 3	2,025	(10) 0.148 x 3	2,025	

SDC C–F – Allowable Tension Loads							
Model No.	Strap Length, L (in.)	l_e (in.)	Uncracked Concrete		Cracked Concrete		Code Ref.
			Required Nails (in.)	Tension	Required Nails (in.)	Tension	
PA51	51	4	(10) 0.148 x 3	2,025	(10) 0.148 x 3	1,840	IBC, FL
PA68	70	4	(10) 0.148 x 3	2,025	(10) 0.148 x 3	1,840	

1. Allowable loads have been increased for wind or earthquake loading with no further increase allowed. Reduce where other loads govern.
2. Concrete shall have a minimum compressive strength of f'_c = 2,500 psi.
3. Masonry applications require grout-filled CMU with minimum compressive strength of f'_m = 1,500 psi.
4. Deflection at highest allowable load is as follows: PA51 and PA68 = 0.10".
5. PA allowable lateral loads are F_1 = 795 lb. and F_2 = 280 lb.
6. #9 x 1½" Strong-Drive® SD Connector screws (SD9) may be substituted for table fasteners with no load reduction.
7. **Fasteners:** Nail dimensions are listed diameter by length. See pp. 21–22 for fastener information.

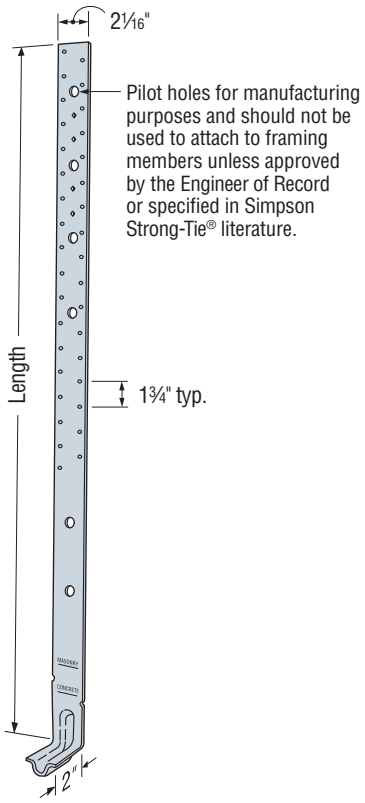

PA51
(PA68 similar)

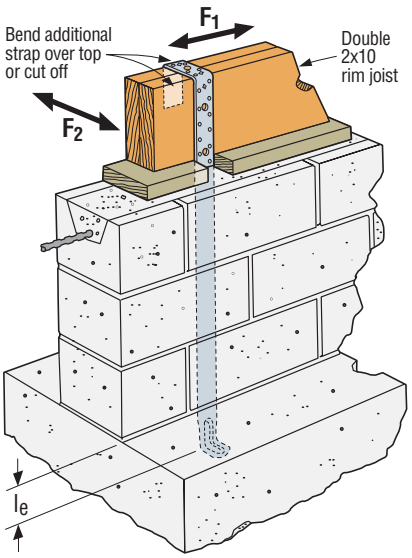

Typical PA51 Installation
(PA68 similar)

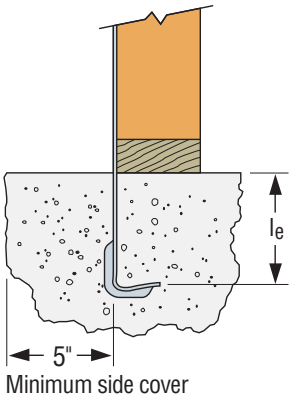

Typical PA Connecting Stud to Foundation

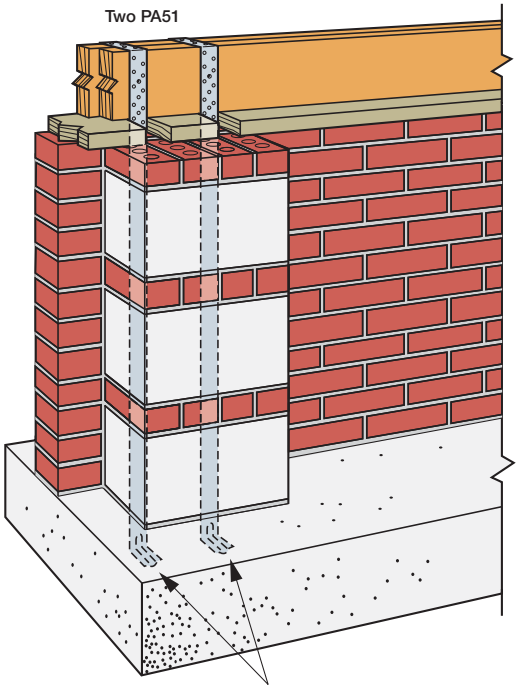

Minimum Two Straps per Pier
Minimum 4" Embedment into Footing

Per ICC 600-2020, Section 505.2.2.2., the assembly shown above is limited to 140 mph, SDC A and B, and one- and two-story buildings.

C-C-2021 ©2021 SIMPSON STRONG-TIE COMPANY INC.

PA/HPA/PAI/MPAI

Purlin Anchors

Purlin anchors offer solutions for wood-to-concrete and concrete-block connections which satisfy code requirements. The HPA offers the highest capacity in concrete. The PA's dual-embedment line allows installation in concrete or concrete block.

Material: PA/PAI — 12 gauge; HPA — 10 gauge; MPAI — 14 gauge

Finish: Galvanized; PAs available HDG or ZMAX® coating

Installation:

- Use all specified fasteners; some models have extra fastener holes. See General Notes.
- Purlin anchor must hook around rebar.
- Allowable loads are for a horizontal installation into the side of a concrete or masonry wall.
- For vertical installation in the top of GFCMU, refer to engineering letter L-C-PAGFCMUUP on **strongtie.com**.
- Strap may be bent one full cycle. (Bent vertical 90° then bent horizontal.)

Edge Distance — Minimum concrete edge distance is 5". Minimum concrete block left-to-right edge distance is 20".

Concrete Block Wall — The minimum wall specifications are:

A One #4 vertical rebar, 32" long, 16" each side of anchor

B Two courses of grout-filled block above and below the anchor (no cold joints allowed)

C A horizontal bond beam with two #4 rebars, 40" long, a maximum of two courses above or below the anchor

D Minimum masonry compressive strength, f'_m = 1,500 psi

Options: See LTT and HTT tension ties for alternate retrofit solutions

Codes: See p. 11 for Code Reference Key Chart

ASCE7 12.11.2.2.5 States:

... Diaphragm to structural wall anchorage using embedded straps shall have the straps attached to or hooked around the reinforcing steel, or otherwise terminated to effectively transfer forces to the reinforcing steel.

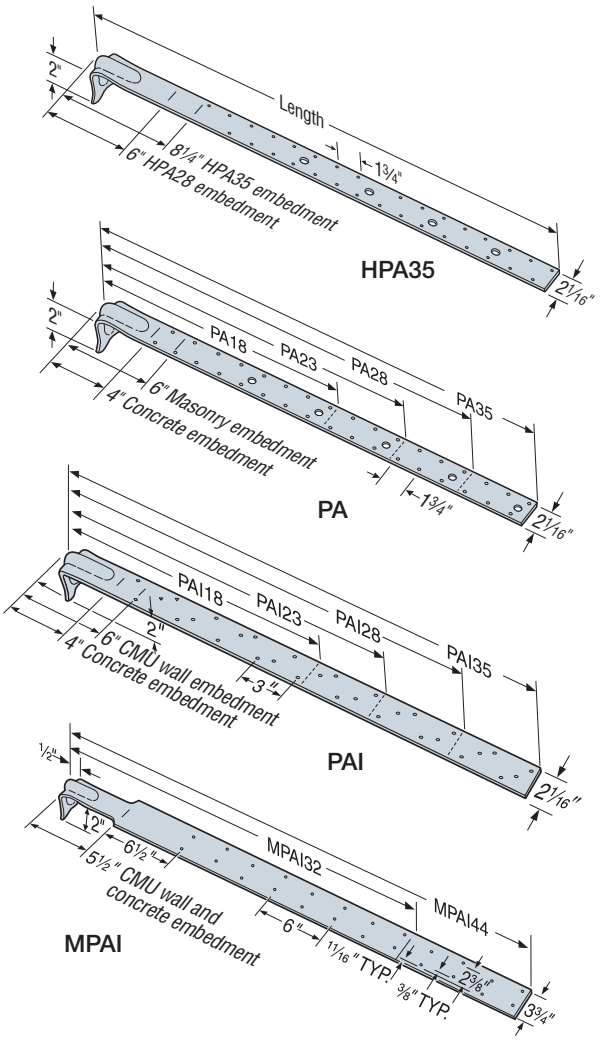

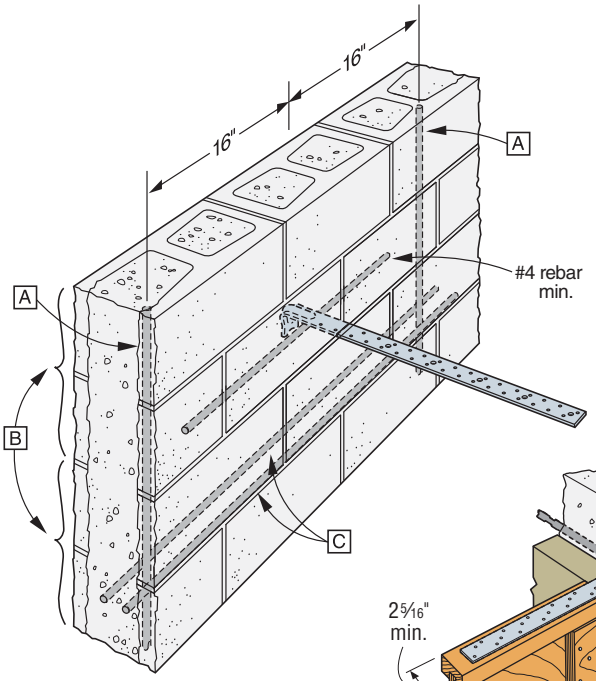

PA/PAI/MPAI Purlin to Grout-Filled Concrete-Block Wall
(refer to installation notes above)

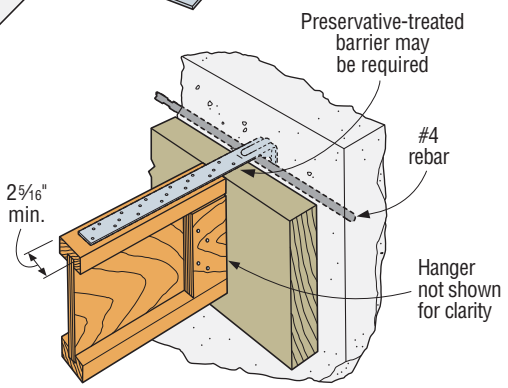

PAI Purlin to Concrete Wall
(MPAI similar)

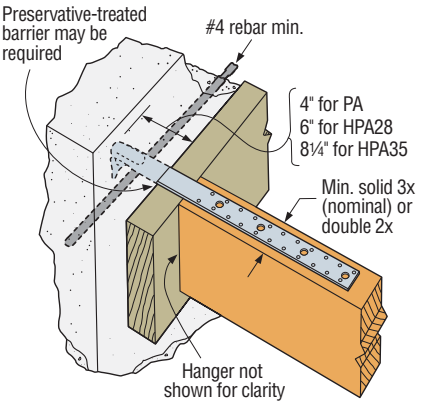

PA/HPA Purlin to Concrete Wall
PAI/MPAI for I-joist applications

C-C-2021 ©2021 SIMPSON STRONG-TIE COMPANY INC.

Purlin Anchors (cont.)

These products are available with additional corrosion protection. For more information, see p. 14.

Wind and SDC A&B – Allowable Tension Loads (160)

Max Ledger Size	Model No.	Strap Length, L (in.)	Embed Length, l_e (in.)		Uncracked Concrete		Cracked Concrete		GFCMU Wall		Max. Allowable Strap Tension	Deflection at Allowable Load (in.)	Code Ref.
			Concrete	GFCMU	Required Nails (in.)	Tension	Required Nails (in.)	Tension	Required Nails (in.)	Tension			
4x Ledger	PA18	18½	4	6	(12) 0.148 x 3	2,430	(12) 0.148 x 3	2,260	(12) 0.148 x 3	1,890	NA	0.087	IBC, FL
	PAI18	18	4	6	(10) 0.148 x 1½	2,025	(10) 0.148 x 1½	2,025	(9) 0.148 x 1½	1,055	NA	0.1	
	PA23	23¾	4	6	(16) 0.148 x 3	3,220	(12) 0.148 x 3	2,260	(16) 0.148 x 3	2,815	NA	0.118	
	PAI23	23	4	6	(15) 0.148 x 1½	3,035	(12) 0.148 x 1½	2,260	(14) 0.148 x 1½	1,805	NA	0.158	
	PA28	29	4	6	(16) 0.148 x 3	3,230	(12) 0.148 x 3	2,260	(16) 0.148 x 3	2,815	NA	0.085	
	PAI28	29	4	6	(16) 0.148 x 1½	3,230	(12) 0.148 x 1½	2,260	(16) 0.148 x 1½	2,705	NA	0.167	
	PA35	35	4	6	(16) 0.148 x 3	3,230	(12) 0.148 x 3	2,260	(16) 0.148 x 3	2,815	NA	0.085	
	PAI35	35	4	6	(16) 0.148 x 1½	3,230	(12) 0.148 x 1½	2,260	(18) 0.148 x 1½	2,815	NA	0.13	
	MPAI32	33½	5½		(16) 0.148 x 1½	2,885	(16) 0.148 x 1½	2,885	(16) 0.148 x 1½	2,355	NA	0.167	
	MPAI44	45½	5½		(16) 0.148 x 1½	2,885	(16) 0.148 x 1½	2,885	(24) 0.148 x 1½	2,865	NA	0.167	
	HPA28	32½	6	6	(22) 0.148 x 3	5,145	(20) 0.148 x 3	4,675	—	—	NA	0.133	
	HPA35	38½	8¼	8¼	(22) 0.148 x 3	5,145	(22) 0.148 x 3	5,145	—	—	NA	0.132	

SDC C–F – Allowable Tension Loads (160)

Max Ledger Size	Model No.	Strap Length, L (in.)	Embed Length, l_e (in.)		Uncracked Concrete		Cracked Concrete		GFCMU Wall		Max. Allowable Strap Tension	Deflection at Allowable Load (in.)	Code Ref.
			Concrete	GFCMU	Required Nails (in.)	Tension	Required Nails (in.)	Tension	Required Nails (in.)	Tension			
4x Ledger	PA18	18½	4	6	(12) 0.148 x 3	2,430	(10) 0.148 x 3	1,980	(12) 0.148 x 3	1,890	3,220	0.087	IBC, FL
	PAI18	18	4	6	(10) 0.148 x 1½	2,025	(10) 0.148 x 1½	1,980	(9) 0.148 x 1½	1,055	4,180	0.1	
	PA23	23¾	4	6	(14) 0.148 x 3	2,830	(10) 0.148 x 3	1,980	(16) 0.148 x 3	2,815	3,220	0.118	
	PAI23	23	4	6	(14) 0.148 x 1½	2,830	(10) 0.148 x 1½	1,980	(14) 0.148 x 1½	1,805	4,180	0.158	
	PA28	29	4	6	(14) 0.148 x 3	2,830	(10) 0.148 x 3	1,980	(16) 0.148 x 3	2,815	3,935	0.085	
	PAI28	29	4	6	(14) 0.148 x 1½	2,830	(10) 0.148 x 1½	1,980	(16) 0.148 x 1½	2,705	5,070	0.167	
	PA35	35	4	6	(14) 0.148 x 3	2,830	(10) 0.148 x 3	1,980	(16) 0.148 x 3	2,815	3,935	0.085	
	PAI35	35	4	6	(14) 0.148 x 1½	2,830	(10) 0.148 x 1½	1,980	(18) 0.148 x 1½	2,815	5,070	0.13	
	MPAI32	33½	5½		(16) 0.148 x 1½	2,885	(16) 0.148 x 1½	2,885	(16) 0.148 x 1½	2,355	3,205	0.167	
	MPAI44	45½	5½		(16) 0.148 x 1½	2,885	(16) 0.148 x 1½	2,885	(24) 0.148 x 1½	2,865	3,205	0.167	
	HPA28	32½	6	6	(22) 0.148 x 3	5,145	(18) 0.148 x 3	4,090	—	—	5,145	0.133	
	HPA35	38½	8¼	8¼	(22) 0.148 x 3	5,145	(22) 0.148 x 3	5,145	—	—	5,145	0.132	

1. Allowable loads have been increased for wind or earthquake loading with no further increase allowed. Reduce where other loads govern.
2. Deflection listed is at the highest allowable load.
3. Multiply Seismic and Wind ASD load values by 1.43 or 1.67, respectively, to obtain LRFD capacities.
4. Nail quantities are based on Douglas fir (DF) or equivalent specific gravity of 0.50 or better. For use in spruce-pine-fir (SPF) or hem-fir (HF), nails quantities shall be increased by 1.15 to achieve loads listed.
5. For wall anchorage systems in SDC C-F, the maximum strap allowable load shall not be less than 1.4 times the ASD anchor design load.
6. Minimum center-to-center spacing is 3x the required embedment — i.e., standard installation is based on a minimum 5" end distance.
7. Structural composite lumber beams have sides that show either the wide face or the lumber strands/veneers. Values in the tables reflect installation into the wide face.
8. Concrete shall have a minimum compressive strength of f'_c = 3,000 psi.
9. Grout-filled CMU (GFCMU) shall have a minimum compressive strength of f'_m = 1,500 psi.
10. PA models installed vertically in the top of a grouted masonry wall with 6" embedment and (12) 0.148" x 3" nails achieve an allowable uplift load of 1,890 lb.
11. For PA models, 0.148" x 1½" nails may be substituted for 0.148" x 3" nails at 100% of listed load and with a 15% increase in deflection. For installation over sheathing, use 3"-long nails minimum.
12. For PAI/MPAI models, 0.148" x 1½" nails shall be used directly onto framing member. For installation over sheathing, use 2⅛"-long nails minimum.
13. **Fasteners:** Nail dimensions are listed diameter by length. See pp. 21–22 for fastener information.

C-C-2021 ©2021 SIMPSON STRONG-TIE COMPANY INC.

Continuous Load Path

This drawing shows the connection points for a continuous load path from the rafters to the foundation of a two-story house.

Building with a continuous load path is an essential part of creating a structure better able to withstand the forces of mother nature.

This drawing is for illustrative purposes only and should not be considered an engineered system. Refer to the page numbers for the full range of Simpson Strong-Tie® connectors. Consult a qualified designer to ensure that correct connector quantities and installation methods are used to achieve the full design load values.

Typical Roof/Wall Connections
pp. 276–279, 283–285

Straps at Openings
pp. 268–274

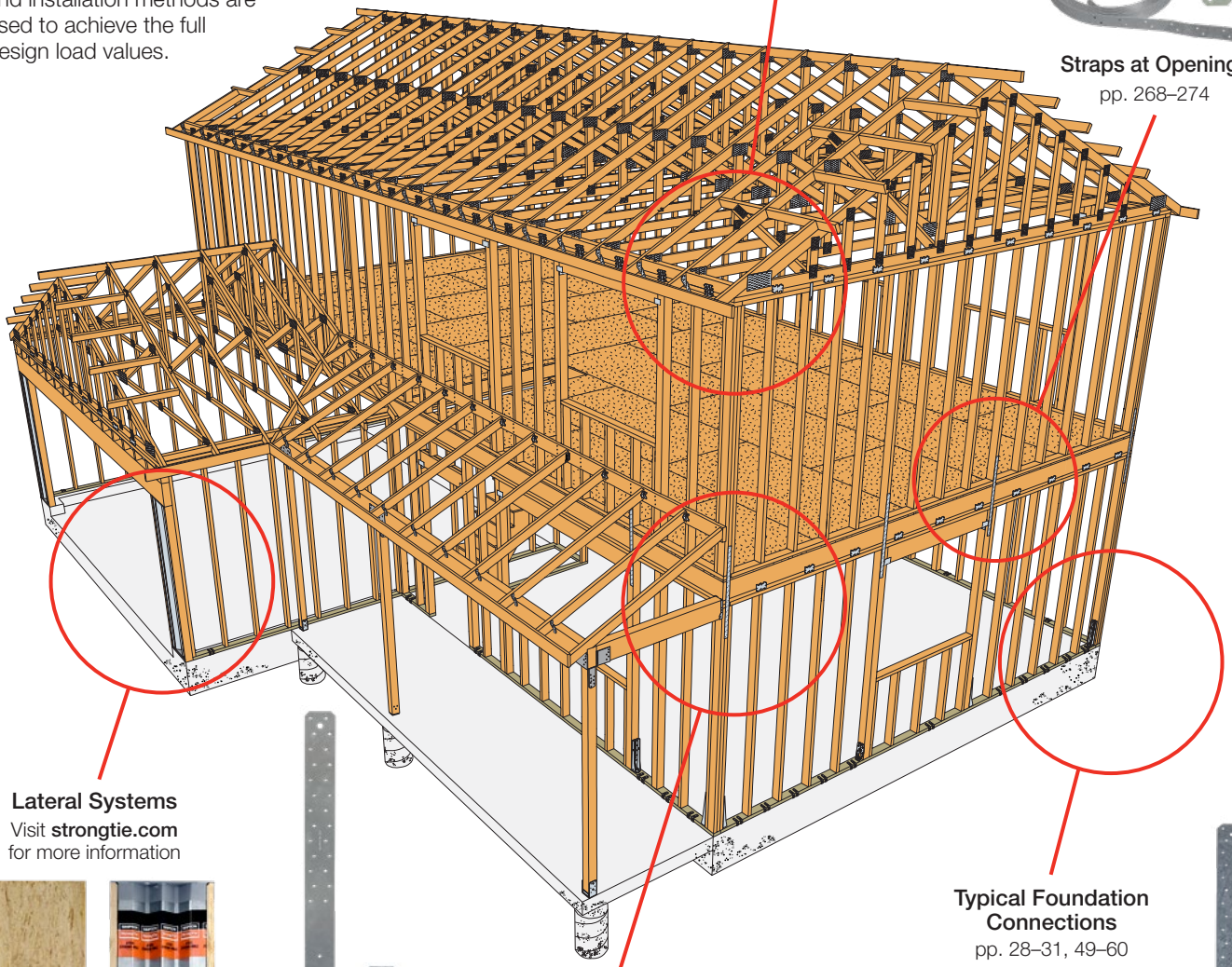

Lateral Systems
Visit **strongtie.com**
for more information

Typical Floor-to-Floor Connections
pp. 49–57, 268–274
and 286–287

Typical Foundation Connections
pp. 28–31, 49–60

C-C-2021 ©2021 SIMPSON STRONG-TIE COMPANY INC.

Bases and Caps General Notes

a. Uplift and lateral loads have been increased for earthquake or wind loading with no further increase allowed. Reduce where other loads govern.

b. Downloads may not be increased for short-term loading, and shall be reduced where limited by the post allowable load. See **strongtie.com/posts** for common post allowable loads.

c. For post bases with 1" standoffs, full bearing on concrete is required. Standoffs shall bear on top of concrete and not be embedded into wet concrete. A higher download may be achieved by solidly packing grout in the 1" standoff area before installation of the post. Allowable download shall be based on the capacity of the post, grout or concrete according to the code. (Figure 1)

d. The designer is responsible for concrete design.

e. For post-installed bases, the designer must specify anchor bolt type, length and embedment. Titen HD®, Stainless-Steel Titen HD and SET-3G™ are some of the retrofit anchor options. For more information, refer to our *Anchoring, Fastening, Restoration and Strengthening Systems for Concrete and Masonry* catalog at **strongtie.com**.

f. Except for the MPBZ moment post base, post bases do not provide adequate resistance to prevent members from rotating about the base and are therefore not recommended for non-top-supported installations (such as fences or unbraced carports). The top of the post must be restrained from moving horizontally by some other means, e.g., by tying the roof into a supporting structure or by adding knee bracing between the posts and beams. (Figure 2) Alternatively, see the MPBZ on pp. 80–81 for a post base that provides moment resistance for columns or posts. (Figure 3)

g. For post bases that do not attach to all four sides of the post, the post may be wider than the base and overhang the base in one direction (e.g., a 6x8 post on an ABU66Z) as long as the bearing area provided by the base is sufficient for the post.

h. For applications involving the use of a post base to support a wood beam, refer to p. 68. (Figure 4)

i. Structural composite lumber columns have sides that show either the wide face or the edges of the lumber strands/veneers. Allowable loads for caps and bases reflect installation into the wide face. See technical bulletin T-C-SCLCLM at **strongtie.com** for load reductions due to narrow face installations. Some products require installation of fasteners into the wide face only.

j. Unless otherwise noted, allowable downloads for post caps are based on the assumption that the wood post is at least as wide as the supported beam. For applications where this condition is not met (e.g., a 6x10 beam supported by 4x4 post), the designer must evaluate the download capacity.

k. Allowable lateral loads for post caps can only be achieved if one of the members, the post or beam, is supported laterally by other means. (Figure 2) For applications involving lateral load transfer from the beam to the column, the column must be designed to receive the load without rotating about its base (e.g., cantilevered out of the ground, diagonally braced, or connected at the base with a moment-resisting connector like the MPBZ post base).

l. Post cap allowable loads are for a continuous beam. Unless otherwise noted, the beam may be spliced at the centerline of the post, and the maximum allowable download for each spliced beam is one half of the cap's tabulated allowable download. For CC, CCQ and CCOS caps, the download for each spliced beam shall also not exceed 2x the download of the other spliced beam. Eccentricity induced in the post by spliced beams must be evaluated by the designer. Tabulated uplift and lateral loads do not apply to spliced beam conditions. When spliced beams must be connected together to transfer design tension loads (lateral loads parallel to the beams), the connection must be by means other than the post cap.

m. Post caps may be installed inverted for post-to-beam applications. The designer is responsible for evaluating the beam to ensure it is capable of receiving all loads applied by the post. (Figure 5)

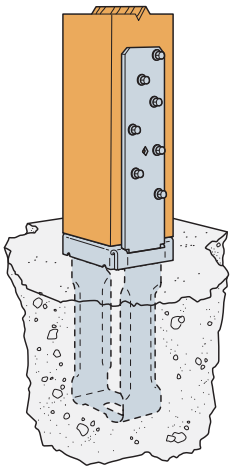

Figure 1 — Post Base with 1" Standoff

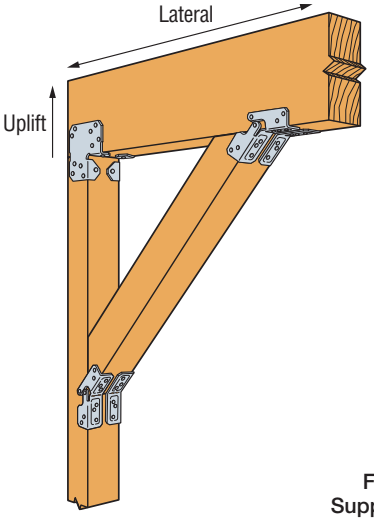

Figure 2 — Typical LCE Post Cap Installation with KBS1Z Knee Bracing

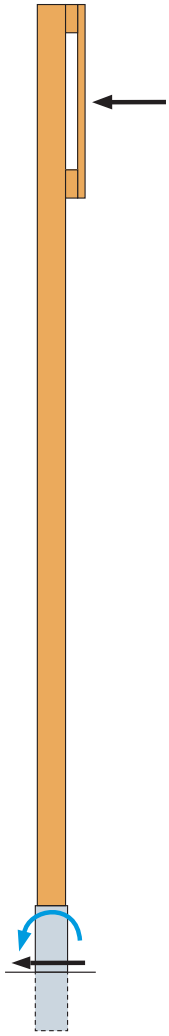

Figure 3 — Non-Top-Supported Post with MPBZ Moment Post Base

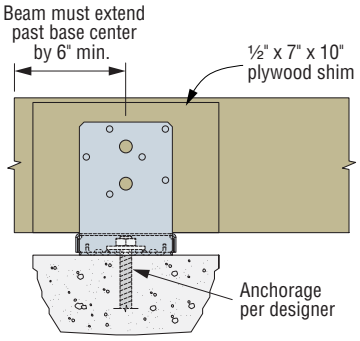

Figure 4 — ABU with Beam Installation

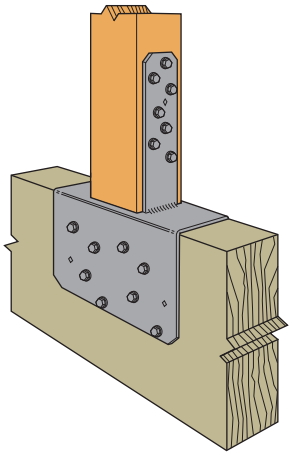

Figure 5 — Typical (Inverted) CCQ44SDS2.5 Post-to-Beam Installation

C-C-2021 ©2021 SIMPSON STRONG-TIE COMPANY INC.

RPBZ

Retrofit Post Base

The RPBZ retrofit post base is designed to reinforce existing posts and columns. The single, versatile model will fit on any size post consisting of a double 2x4 or larger. RPBZ can also be used to reinforce new post-base connections, such as braced carports, patio covers, decks and other structures. The RPBZ can be installed with the CPS composite plastic standoff to meet a 1" post standoff code requirement. (For more information about the CPS, see p. 331.) A single RPBZ can be installed on a post that is flush to a corner, and two RPBZs can be installed at away-from-edge conditions to fortify the post-base connection to resist both wind and seismic forces.

Strong-Drive® SDS Heavy-Duty Connector screws install easily and provide excellent holding strength for post-to-flange connections. Additionally, the RPBZ can be purposed as a temporary base fixture for posts when shoring beams. RPBZ comes standard in ZMAX® finish to meet exposure conditions in many environments. See additional corrosion information at **strongtie.com/corrosion**.

Material: 12 gauge

Finish: ZMAX coating

Installation:

- Use all specified fasteners; see General Notes.
- ¼" x 1½" Strong-Drive SDS Heavy-Duty Connector and base connection fasteners are not provided with RPBZ. Simpson Strong-Tie CPS series composite post standoff sold separately.
- Post bases do not provide adequate resistance to prevent members from rotating about the base and therefore are not recommended for non-top-supported installations, such as fences or unbraced car ports.

Codes: See p. 11 for Code Reference Key Chart

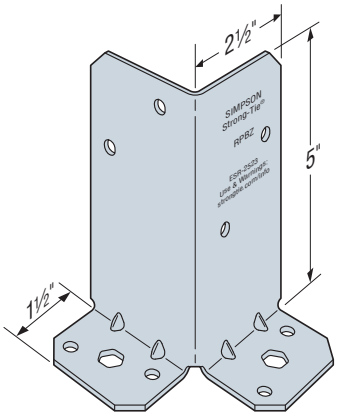

RPBZ

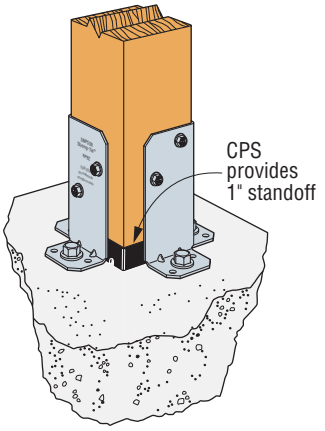

RPBZ Installation with CPS Away from Edge on Concrete

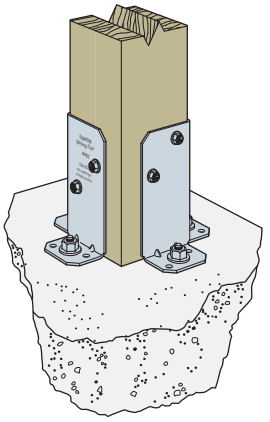

RPBZ Installation in Exterior Environment

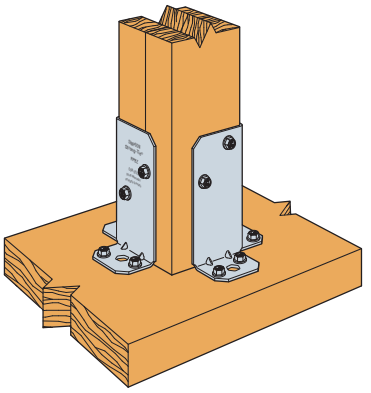

RPBZ Installation on Wood

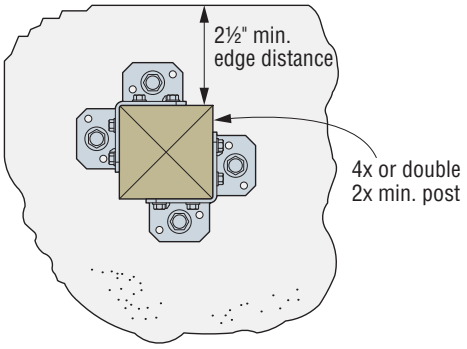

RPBZ Installation Away from Edge on Concrete
(See footnote 6 on next page.)

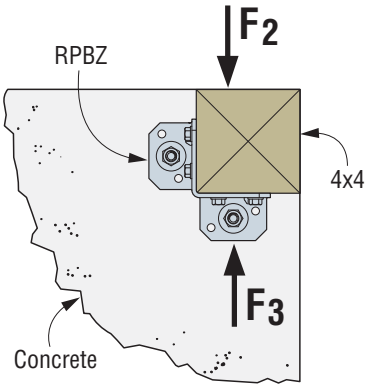

RPBZ Corner Installation Post Flush to Edge

C-C-2021 ©2021 SIMPSON STRONG-TIE COMPANY INC.

Retrofit Post Base (cont.)

These products are available with additional corrosion protection. For more information, see p. 14.

RPBZ Connector-Only Values

Model No.	Part Qty.	Post Size	Fasteners: Base Connection[4,5] Type	Fasteners: Base Connection[4,5] Qty.	Fasteners: Post Type	Fasteners: Post Qty.	Allowable Connector Loads (DF/SP): Uplift (160)	Allowable Connector Loads (DF/SP): F_2 (160)	Allowable Connector Loads (DF/SP): F_3 (160)	Code Ref.
RPBZ	Connection to Concrete									IBC, FL, LA
	1	4x, 6x	⅜" anchor bolt or ¼" Titen Turbo™ screw	2 anchors or 4 screws	¼" x 1½" SDS	4	1,500	1,005	485	
	2			4 anchors or 8 screws		8	2,235	1,115	1,115	
	Connection to Wood Framing									
	1	4x, 6x	¼" x 3" SDS	4	¼" x 1½" SDS	4	1,335	1,005	485	
	2			8		8	2,235	1,115	1,115	
	1		¼" x 1½" SDS	4		4	845	1,005	485	
	2			8		8	1,825	1,115	1,115	

See footnotes below.

RPBZ Anchorage-to-Concrete Values

Model No.	Part Qty.	Post Size	Fasteners: Base Connection Type	Fasteners: Base Connection Qty.	Allowable Anchorage Loads: Uplift Uncracked	Allowable Anchorage Loads: Uplift Cracked	Allowable Anchorage Loads: F_2	Allowable Anchorage Loads: F_3
RPBZ	Corner – Post Flush to Edge							
	1	4x, 6x	¼" x 1¾" Titen Turbo screw	4	750	—	820	820
			⅜"-diameter anchor	2	1,520	1,085	510	510
	Away from Edge							
	1	4x, 6x	¼" x 1¾" Titen Turbo screw	4	850	—	935	935
			⅜"-diameter anchor	2	2,190	1,565	1,265	1,265
	2		¼" x 1¾" Titen Turbo screw	8	1,500	—	1,645	1,645
			⅜"-diameter anchor	4	3,635	2,595	1,730	1,730

1. Allowable load for design shall not exceed minimum of Connector Only Value and Anchorage to Concrete Value.
2. Allowable connector loads are based on DF/SP lumber. For SPF/HF, multiply table loads by 0.86.
3. Double 2x4s may be used in lieu of 4x4 post.
4. For installation on 6x or larger members, if four RPBZ post bases are used, allowable loads may be taken to be 1.5 x the tabulated two-part value.
5. For installations into concrete, the minimum compressive strength is f'_c = 2,500 psi. Designer is responsible for concrete member uplift design.
6. Away-From-Edge loads require face of wood post to be a minimum of 2½" away from near edge of concrete on all four sides of the post.
7. Allowable anchorage to concrete uplift and shear loads for the ⅜" diameter anchors are calculated per ACI 318-19. Shear loads assume cracked concrete while uplift loads consider both cracked and uncracked concrete values, and all are qualified for Wind and Seismic Design Categories A&B.
8. Embedment depth for these post-install anchors must be a minimum of 2¾" and are for use with SET-3G™ or AT-XP® structural anchoring adhesives or Titen HD® screw anchors.
9. Allowable uplift and shear loads for the Titen Turbo masonry screws do not carry a particular "cracked" or "uncracked" designation.
10. Titen Turbo masonry screws and non-stainless-steel Titen HD screw anchors should be used only in interior-dry and non-corrosive environments.
11. For connection to wood framing, loads are based on penetration of the Strong-Drive® SDS Heavy-Duty Connector screw's entire threaded section into the main member. If thread penetration into the main member is less than the "Thread Length" as shown in the table (see p. 347) for DF/SP, reduce allowable load by 172 lb./in. of thread not in the main member. Use 121 lb./in. for SPF/HF.

C-C-2021 ©2021 SIMPSON STRONG-TIE COMPANY INC.

ABA/ABU/ABW

Adjustable and Standoff Post Bases

Additional standoff bases are on p. 331.

The AB series of retrofit adjustable post bases provide a 1" standoff for the post, are slotted for adjustability and can be installed with nails, Strong-Drive® SD Connector screws or bolts (ABU). Depending on the application needs, these adjustable standoff post bases are designed for versatility, cost-effectiveness and maximum uplift performance.

Features:

- The slot in the base enables flexible positioning around the anchor bolt, making precise post placement easier
- The 1" standoff helps prevent rot at the end of the post and meets code requirements for structural posts installed in basements or exposed to weather or water splash

Material: Varies (see table)

Finish: ZMAX® and some in stainless steel; see Corrosion Information, pp. 12–15

Installation:

- Use all specified fasteners; see General Notes.
- See our *Anchoring, Fastening, Restoration and Strengthening Systems for Concrete and Masonry* catalog, or visit **strongtie.com** for retrofit anchor options, such as Titen HD®, Stainless-Steel Titen HD or SET-3G™.
- Post bases do not provide adequate resistance to prevent members from rotating about the base and therefore are not recommended for non-top-supported installations (such as fences or unbraced carports).
- Place the base, cut washer(s) or load transfer plate(s) and nut(s) on the anchor bolt(s). Make any necessary adjustments to post placement and tighten the nut securely on the anchor bolt.
- See **strongtie.com** for information on hollow column installation.

ABW

Place the standoff base and then the post in the ABW and fasten on three vertical sides, using nails or Strong-Drive SD Connector screws

– Bend up the fourth side of the ABW and fasten using the correct fasteners

ABU

Place the standoff base and then the post in the ABU

– Fasten using nails or Strong-Drive SD Connector screws or bolts (ABU88Z, ABU1010Z, ABU1212Z – SDS optional)

ABA

Place the post in the ABA

– Fasten using nails or Strong-Drive SD Connector screws

Codes: See p. 11 for Code Reference Key Chart

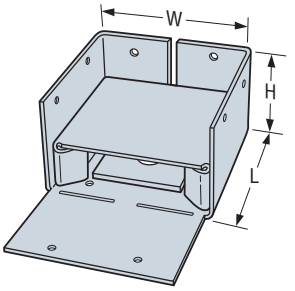

ABWZ

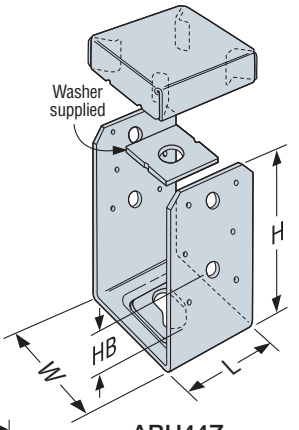

ABU44Z
(other sizes similar)

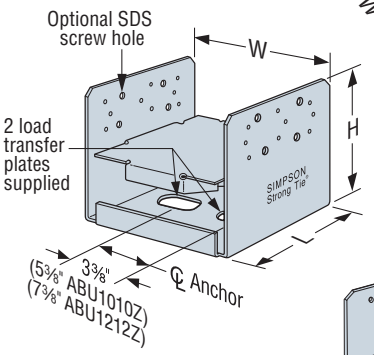

ABU88Z
(other sizes similar)

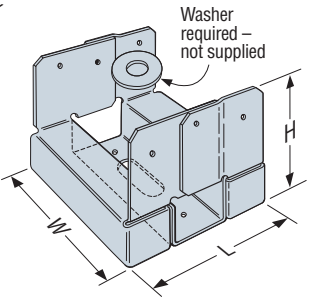

ABA44Z
(other sizes similar)

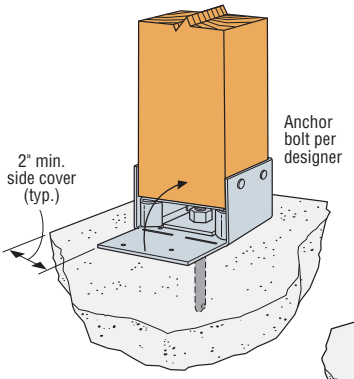

Typical ABWZ Installation

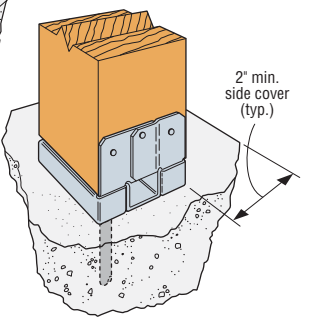

Typical ABA44Z Installation

Allowable Loads — Beam Installation

Model No.	Nominal Beam Size	Material (ga.)		Dimensions (in.)			Fasteners (in.)		DF/SP Allowable Loads		SPF/HF Allowable Loads	
		Base	Strap	W	L	H	Anchor Dia.	Nails	Uplift (160)	Down (100)	Uplift (160)	Down (100)
ABU46Z	Double 2x	12	12	3 9/16	5	7	⅝	(12) 0.162 x 3½	2,030	8,475	1,820	6,075
ABU46Z	4x	12	12	3 9/16	5	7	⅝	(12) 0.162 x 3½	2,155	9,890	1,850	7,090
ABU46RZ	Rough 4x	12	12	4	6	6¾	⅝	(12) 0.162 x 3½	2,155	9,890	1,850	7,090
ABU66Z	Triple 2x	12	10	5½	5	6 1/16	⅝	(12) 0.162 x 3½	1,405	12,715	1,165	9,115
ABU66Z	6x	12	10	5½	5	6 1/16	⅝	(12) 0.162 x 3½	1,905	12,920	1,640	11,110
ABU66RZ	Rough 6x	12	10	6	6	5 13/16	⅝	(12) 0.162 x 3½	1,905	12,920	1,640	11,110

1. Uplift loads have been increased for earthquake or wind loading with no further increase allowed. Reduce where other loads govern.
2. Downloads may not be increased for short-term loading.
3. Specifier is to design concrete and anchorage for uplift capacity.
4. Beam depth must be a minimum of 7¼".
5. Shims are required for double 2x (1 shim) and triple 2x (2 shims) installations as shown in the illustration. Additional fastening of shim to beam is not required.
6. **Fasteners:** Nail dimensions are listed diameter by length. See pp. 21–22 for fastener information.

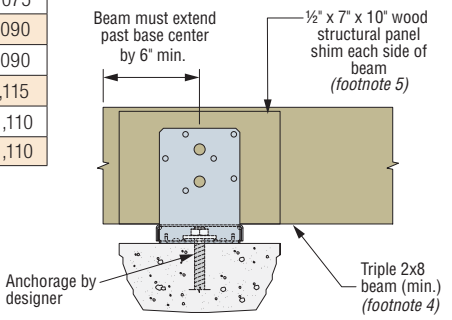

ABU66Z Beam Installation

C-C-2021 ©2021 SIMPSON STRONG-TIE COMPANY INC.

ABA/ABU/ABW

SIMPSON Strong-Tie®

Adjustable and Standoff Post Bases (cont.)

These products are available with additional corrosion protection. For more information, see p. 14.

SS For stainless-steel fasteners, see p. 21.

SD Many of these products are approved for installation with Strong-Drive® SD Connector screws. See pp. 348–352 for more information.

Allowable Loads — Post Installation

	Model No.	Nominal Post Size	Material (ga.)		Dimensions (in.)				Fasteners				Allowable Loads (DF/SP)			Code Ref.
			Base	Strap	W	L	H	HB	Anchor Dia. (in.)	Nails (in.)	Bolts Qty.	Bolts Dia. (in.)	Uplift Nails	Uplift Bolts	Down (100)	
	ABA44Z	4x4	16	16	3 9/16	3 3/8	3 1/16	—	1/2	(6) 0.148 x 3	—	—	690	—	5,925	IBC, FL, LA
	ABW44Z	4x4	16	16	3 9/16	3 9/16	2 1/4	—	1/2	(8) 0.148 x 3	—	—	1,005	—	7,180	
SS	ABU44Z	4x4	16	12	3 9/16	3	5 1/2	1 3/4	5/8	(12) 0.162 x 3 1/2	2	1/2	1,900	2,300	7,570	
	ABA44RZ	Rough 4x4	16	16	4 1/16	3 1/8	2 13/16	—	1/2	(6) 0.148 x 3	—	—	655	—	7,215	
	ABW44RZ	Rough 4x4	16	16	4	4 1/16	1 15/16	—	1/2	(8) 0.148 x 3	—	—	835	—	7,180	
	ABU44RZ	Rough 4x4	16	12	4 1/16	3	5 1/4	1 1/2	5/8	(12) 0.162 x 3 1/2	2	1/2	1,900	2,300	7,570	
	ABA46Z	4x6	14	14	3 9/16	5 9/16	3 1/8	—	5/8	(8) 0.162 x 3 1/2	—	—	870	—	10,500	
	ABW46Z	4x6	12	16	3 9/16	5 9/16	3	—	1/2	(10) 0.148 x 3	—	—	845	—	4,590	
SS	ABU46Z	4x6	12	12	3 9/16	5	7	2 5/8	5/8	(12) 0.162 x 3 1/2	2	1/2	2,405	2,265	12,520	
	ABA46RZ	Rough 4x6	14	14	4 1/16	5 9/16	2 7/8	—	5/8	(8) 0.162 x 3 1/2	—	—	870	—	10,695	
	ABW46RZ	Rough 4x6	12	16	4	6	2 13/16	—	1/2	(10) 0.148 x 3	—	—	780	—	4,590	
	ABU46RZ	Rough 4x6	12	12	4 1/16	5	6 3/4	2 3/8	5/8	(12) 0.162 x 3 1/2	2	1/2	2,405	2,265	12,520	
	ABU5-5Z	5 1/8 x 5 1/8	12	10	5 1/4	5	6 1/16	1 3/4	5/8	(12) 0.162 x 3 1/2	2	1/2	2,235	2,235	10,570	
	ABU5-6Z	5 1/8 x 6	12	10	6 1/8	5	6 1/16	1 3/4	5/8	(12) 0.162 x 3 1/2	2	1/2	2,235	2,235	10,570	
	ABU65Z	5 1/2 x 5	12	10	5 1/2	5	6 1/16	1 3/4	5/8	(12) 0.162 x 3 1/2	—	—	2,475	—	10,960	
	ABA66Z	6x6	14	14	5 1/2	5 3/8	3 1/8	—	5/8	(8) 0.162 x 3 1/2	—	—	850	—	10,245	
	ABW66Z	6x6	12	14	5 1/2	5 9/16	3	—	1/2	(12) 0.148 x 3	—	—	1,190	—	12,935	
SS	ABU66Z	6x6	12	10	5 1/2	5	6 1/16	1 3/4	5/8	(12) 0.162 x 3 1/2	2	1/2	2,475	2,190	18,205	
	ABA66RZ	Rough 6x6	14	14	6	5 9/16	2 7/8	—	5/8	(8) 0.162 x 3 1/2	—	—	850	—	11,500	
	ABW66RZ	Rough 6x6	12	14	6	6	2 13/16	—	1/2	(12) 0.148 x 3	—	—	1,190	—	12,935	
	ABU66RZ	Rough 6x6	12	10	6 1/16	5	5 13/16	1 1/2	5/8	(12) 0.162 x 3 1/2	2	1/2	2,475	2,190	18,205	
	ABW7-7Z	7 1/8 x 7 1/8	12	14	7 5/16	7 5/16	3	—	1/2	(12) 0.148 x 3	—	—	840	—	14,530	
SS	ABU88Z	8x8	14	12	7 1/2	7	7	—	(2) 5/8	(18) 0.162 x 3 1/2	—	—	2,570	—	22,405	
	ABU88RZ	Rough 8x8	14	12	8	7	7	—	(2) 5/8	(18) 0.162 x 3 1/2	—	—	2,450	—	19,870	
	ABU1010Z	10x10	14	14	9 1/2	9	7 1/4	—	(2) 5/8	(22) 0.162 x 3 1/2	—	—	2,270	—	32,020	
	ABU1010RZ	Rough 10x10	14	14	10	9	7	—	(2) 5/8	(22) 0.162 x 3 1/2	—	—	1,830	—	31,650	
	ABU1212Z	12x12	12	12	11 1/2	11	7 1/4	—	(2) 5/8	(22) 0.162 x 3 1/2	—	—	3,000	—	34,745	
	ABU1212RZ	Rough 12x12	12	12	12	11	7	—	(2) 5/8	(22) 0.162 x 3 1/2	—	—	3,000	—	34,745	

1. Uplift loads have been increased for earthquake or wind loading with no further increase allowed. Reduce where other loads govern.
2. Downloads may not be increased for short-term loading.
3. Specifier is to design concrete and anchorage for uplift loads.
4. ABU products may be installed with either bolts or nails (not both) to achieve table loads. ABU88Z, ABU88RZ, ABU1010Z, ABU1010RZ, and ABU1212Z/RZ may be installed with eight ¼" x 3" Strong-Drive SDS Heavy-Duty Connector screws (sold separately) for the same table load.
5. For higher downloads, pack grout solid under 1" standoff plate before installation. Base download on column or concrete, according to the code.
6. HB dimension is the distance from the bottom of the post up to the first bolt hole.
7. Structural composite lumber columns have sides that show either the wide face or the edges of the lumber strands/veneers. For SCL columns, the fasteners for these products should always be installed in the wide face. See technical bulletin T-C-SCLCLM at **strongtie.com** for more information.
8. Downloads shall be reduced where limited by allowable loads of the post.
9. **Fasteners:** Nail dimensions are listed diameter by length. See pp. 21–22 for fastener information.

C-C-2021 ©2021 SIMPSON STRONG-TIE COMPANY INC.

CPTZ

Concealed Post Tie

The CPTZ concealed post base provides a clean, concealed look while providing a 1" standoff height above concrete. The 1" standoff reduces the potential for decay at the post end and satisfies code requirements for posts that are exposed to weather, water splash or in basements. It is part of a system of concealed connectors that includes the CBTZ and CJTZ.

- The CPTZ is tested and load-rated for uplift, download and lateral load.
- Simpson Strong-Tie saves installers time by providing all the necessary components to make the post connection in one box (anchors not included).
- There are two anchorage solutions available. See tables for information.
- Solutions have been calculated per ACI 318 to determine their allowable load in different concrete configurations.

Material: See table below

Finish: Knife plate, washers and standoff base are ZMAX®-galvanized steel. The standoff base has an additional textured, flat black powder-coat finish for aesthetic purposes. The ½"-diameter drift dowels are mechanically galvanized in accordance with ASTM B695, Class 55. If substituting ½"-diameter bolts, a hot-dip galvanized finish is recommended. Some available in stainless steel (see table).

Installation:

- Use all specified fasteners; see General Notes
- More extensive installation instructions are available through our Literature Library app or by visiting **strongtie.com**
- Post bases do not provide adequate resistance to prevent members from rotating about the base and therefore are not recommended for non-braced, or non-top-supported installations

Codes: See p. 11 for Code Reference Key Chart

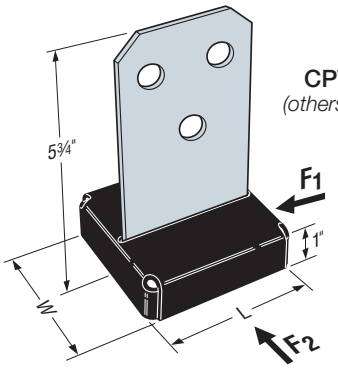

CPT44Z
(others similar)

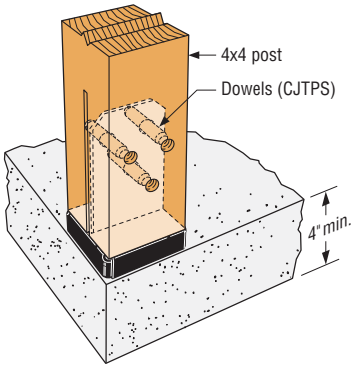

Typical CPT44Z Installation

These products are available with additional corrosion protection. For more information, see p. 14.

SS For stainless-steel fasteners, see p. 21.

Model No.	Nominal/ Rough Post Size	Base (ga.)	Knife Plate (ga.)	Dimensions (in.)		Fasteners				Allowable Loads (DF/SP)				Code Ref.
				W	L	Anchor		Post		Uplift (160)	Down (100)	F_1 (160)	F_2 (160)	
						Qty.	Dia.	Qty.	Type[3]					
SS CPT44Z	4x4	12	10	3½	3½	2	½	3	½" x 2¾" dowel	3,035	11,455	600	605	IBC, FL, LA
									½" MB	3,240				
CPT66Z	6x6	12	10	5⅜	5⅜	2	½	3	½" x 4¾" dowel	3,315	20,130	655	1,025	
									½" MB	4,055				
CPT88Z	8x8	12	10	7¼	7¼	2	½	3	½" x 4¾" dowel	3,315	22,805	740	1,080	
									½" MB	4,055				

1. Uplift loads have been increased for earthquake or wind loading with no further increase allowed. Reduce where other loads govern.
2. Downloads shall be reduced where limited by capacity of the post.
3. CPTZ concealed post ties are supplied with (3) ½"-diameter dowel pins. Alternative ½"-diameter hex- or square-head machine bolts may be used for loads listed.
4. Lag screws or carriage bolts are not permitted.
5. Structural composite lumber columns have sides that show either the wide face or the edges of the lumber strands/veneers. For SCL columns, the fasteners for these products should always be installed in the wide face. See technical bulletin T-C-SCLCLM for more information.

C-C-2021 ©2021 SIMPSON STRONG-TIE COMPANY INC.

Concealed Post Tie (cont.)

Anchor Option 1 —
CPTZ Anchorage Using SET-3G™ Anchoring Adhesive

Model No.	Embed. (in.)	Edge Distance (in.)	Allowable Uplift		
			Anchorage		CPTZ
			Uncracked	Cracked	
Corner — Flush Edge					
CPT44Z	2¾	—	505	405	3,035
CPT66Z	2¾	—	580	465	3,315
CPT88Z	2¾	—	625	500	3,315
Corner — Near Edge					
CPT44Z	5	4	1,480	1,185	3,035
CPT66Z	5	5	2,025	1,620	3,315
CPT88Z	5	6	2,430	1,945	3,315
Corner — Away from Edge					
CPT44Z	6	9	4,005	3,205	3,035
CPT66Z	7½	11¼	5,440	4,350	3,315
CPT88Z	7½	11¼	5,440	4,350	3,315
10"-Diameter Circular Pedestal					
CPT44Z	5	4	1,560	1,245	3,035
CPT66Z	5	3¾	1,460	1,165	3,315
12"-Diameter Circular Pedestal					
CPT44Z	5	5	2,025	1,620	3,035
CPT66Z	5	4¾	1,935	1,550	3,315
CPT88Z	5	4¾	1,935	1,550	3,315

1. Allowable uplift loads are calculated per ACI 318-19 with reference to cracked and uncracked concrete and are qualified for Wind and Seismic Design Categories A&B. Allowable loads are also applicable to detached one- and two-family dwellings in SDC C per IBC, Section 1613. No further increases allowed.
2. Edge distance is considered to be measured from the center line of the nearest anchor bolt to the edge of concrete.
3. Foundation dimensions are for anchorage only. Foundation design (size and reinforcement) by designer. The registered design professional may specify alternative embedment, footing size, and anchor bolt.
4. Lateral loads ($F_1 = F_2$) for Corner – Flush Edge conditions are CPT44Z = 395 lb., CPT66Z = 570 lb., and CPT88Z = 740 lb. For all other installations using CPTZ with SET-3G® or SET-XP® anchoring adhesive, use the allowable loads from the CPTZ table above.
5. Concrete shall have a minimum compressive strength of f'_c = 2,500 psi.

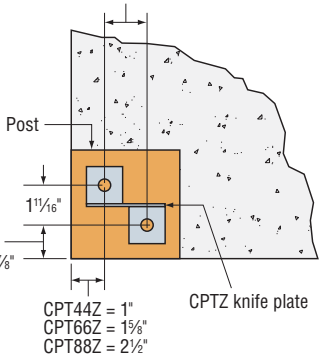

Corner Flush Edge

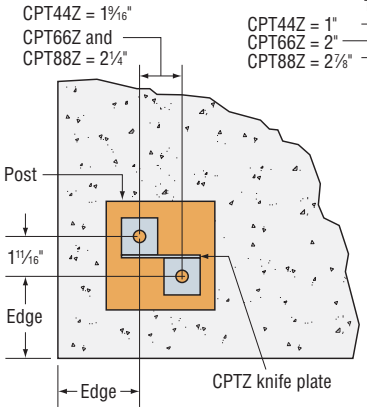

Corner Near Edge
(away from edge similar)

Anchor Option 2 —
CPTZ Cast-in-Place Anchorage

Model No.	Embedment (in.)	Edge Distance (in.)	Allowable Uplift		
			Anchorage		CPTZ
			Uncracked	Cracked	
Corner — Flush Edge					
CPT44Z	2¾	—	870	695	3,035
CPT66Z	2¾	—	1,590	1,270	3,315
CPT88Z	2¾	—	2,435	1,950	3,315
Corner — Away from Edge					
CPT44Z	5	4	3,760	3,010	3,035
CPT66Z	6	5	5,390	4,310	3,315
CPT88Z	6	5	5,390	4,310	3,315
10"-Diameter Circular Pedestal					
CPT44Z	5	4	3,945	3,155	3,035
CPT66Z	5	3¾	3,860	3,090	3,315
12"-Diameter Circular Pedestal					
CPT44Z	5	5	5,170	4,135	3,035
CPT66Z	5	4¾	5,140	4,110	3,315
CPT88Z	5	4¾	5,140	4,110	3,315

1. Allowable uplift loads are calculated per ACI 318-19 with reference to cracked and uncracked concrete and are qualified for Wind and Seismic Design Categories A&B. Allowable loads are also applicable to detached one- and two-family dwellings in SDC C per IBC, Section 1613. No further increases allowed.
2. Edge distance is considered to be measured from the center line of the nearest anchor bolt to the edge of concrete.
3. Tabulated anchor embedments will also achieve the maximum lateral loads from the CPTZ table on p. 70.
4. Foundation dimensions are for anchorage only. Foundation design (size and reinforcement) by designer. The registered design professional may specify alternative embedment, footing size, and anchor bolt.

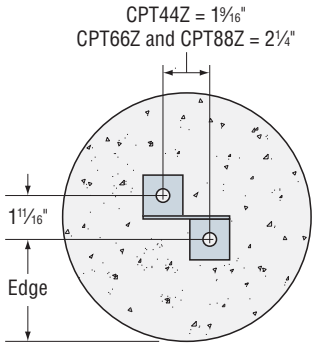

Circular Pedestal Edge Distance

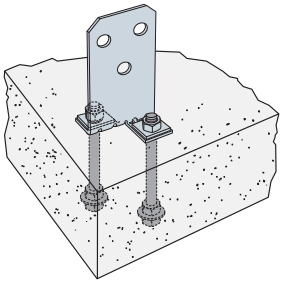

Corner Installation

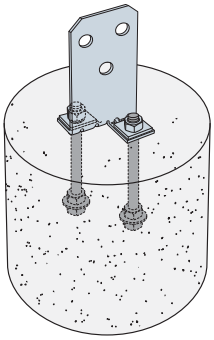

Circular Pedestal Installation

C-C-2021 ©2021 SIMPSON STRONG-TIE COMPANY INC.

EPB

Elevated Post Base

Material: EPB44A — 14 gauge; others — 12 gauge base plate, 1 1/16" OD x 8" pipe

Finish: EPB44A — Galvanized; all others — Simpson Strong-Tie gray paint (may be ordered HDG); see Corrosion Information, pp. 12–15

Installation:

- Use all specified fasteners; see General Notes
- Allows 1" to 2½" clearance above concrete, 2" for EPB44A
- Post bases do not provide adequate resistance to prevent members from rotating about the base and therefore are not recommended for non-top-supported installations (such as fences or unbraced carports)

Options:

- 12" pipe available for EPB44, 46, 66; specify "-12" after model number

Codes: See p. 11 for Code Reference Key Chart

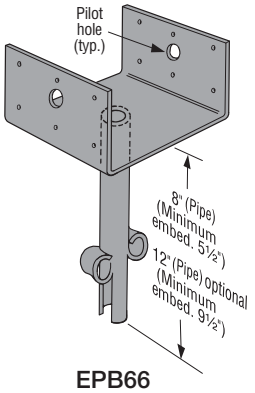

EPB66
(EPB44 and EPB46 similar)

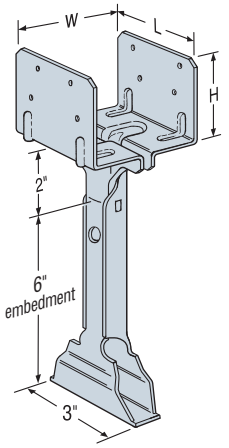

EPB44A

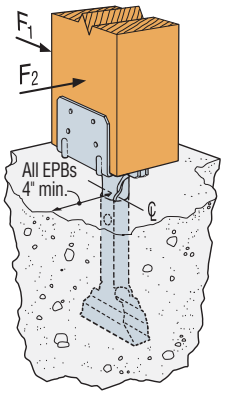

Typical EPB44A Installation

These products are available with additional corrosion protection. For more information, see p. 14.

SD Many of these products are approved for installation with Strong-Drive® SD Connector screws. See pp. 348–352 for more information.

Model No.	Dimensions (in.)			Nails	Allowable Loads					Code Ref.
					Uncracked	Cracked	Download	F_1	F_2	
	W	L	H		Uplift (160)	Uplift (160)	(100)	(160)	(160)	
Wind and Seismic Design Category A&B										
EPB44A	3 9/16	3	2⅜	(8) 0.162 x 3½	1,075	755	2,670	695	795	IBC, FL, LA
EPB44	3 9/16	3¼	2 5/16	(8) 0.162 x 3½	995	695	3,465	850	965	
EPB46	5½	3 5/16	3	(12) 0.162 x 3½	995	695	3,465	850	965	
EPB66	5½	5½	3	(12) 0.162 x 3½	995	695	3,465	850	965	
Seismic Design Category C–F										
EPB44A	3 9/16	3	2⅜	(8) 0.162 x 3½	940	660	2,670	695	795	IBC, FL, LA
EPB44	3 9/16	3¼	2 5/16	(8) 0.162 x 3½	870	605	3,465	850	965	
EPB46	5½	3 5/16	3	(12) 0.162 x 3½	870	605	3,465	850	965	
EPB66	5½	5½	3	(12) 0.162 x 3½	870	605	3,465	850	965	

1. Loads may not be increased for duration of load.
2. Concrete shall have a minimum compressive strength of f'_C = 2,500 psi.
3. Multiply Seismic and Wind ASD uplift and lateral load values by 1.43 or 1.67, respectively, to obtain LRFD capacities.
4. In accordance with IBC, Section 1613.1, detached one- and two-family dwellings in Seismic Design Category (SDC) C may use "Wind and SDC A&B" allowable loads.
5. Downloads shall be reduced where limited by capacity of the post.
6. Designer is responsible for concrete design.
7. For full loads, the distance to the nearest concrete edge is 4" minimum from the EPB center line.
8. Structural composite lumber columns have sides that show either the wide face or the edges of the lumber strands/veneers known as the narrow face. Values in the tables reflect installation into the wide face. See technical bulletin T-C-SCLCLM at **strongtie.com** for load reductions resulting from narrow-face installations.
9. **Fasteners:** Nail dimensions are listed diameter by length. See pp. 21–22 for fastener information.

C-C-2021 ©2021 SIMPSON STRONG-TIE COMPANY INC.

EPB44PHDG

Elevated Post Base

EPB44PHDG can be used both for pier block and cast-in-place installation for 4x4 posts.

Material: 12-gauge base; threaded rod support ¾" x 6", nut and washer are shipped assembled

Finish: HDG; see Corrosion Information, pp. 12–15

Installation:

- **Secured with Anchoring Adhesive:**
  Drill a ⅞"-diameter hole 4" deep minimum and fill the hole halfway with anchoring adhesive (per installation instructions). Insert the EPB44PHDG and adjust to the desired height. The threaded rod shall be embedded a minimum of 3½". Minimum sidecover is 3" from the center of the threaded rod.
- Go to **strongtie.com** for additional information on hole cleaning procedures and cure time for SET-3G® and AT-XP® anchoring adhesives.
- **Supported by a Nut:**
  Drill a 1"-diameter hole 3½" deep minimum. Insert the EPB44PHDG and adjust to the desired height.
- **Cast-in-Place:**
  Embedded end to have a nut and bearing plate with a minimum embedment of 4" from top of concrete to the top of plate.
- Minimum sidecover is 3" from the center of the threaded rod.
- Fully engage at least three threads in the base.
- Post bases do not provide adequate resistance to prevent members from rotating about the base and therefore are not recommended for non-top-supported installations (such as fences or unbraced carports).

Codes: See p. 11 for Code Reference Key Chart

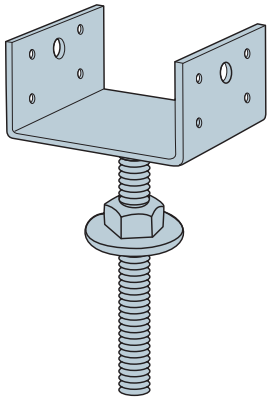

EPB44PHDG

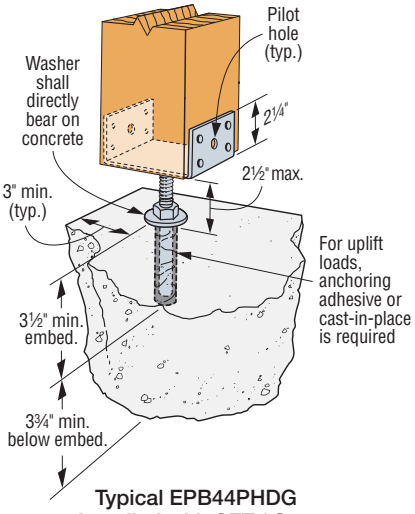

Typical EPB44PHDG Installed with SET-3G or AT-XP Anchoring Adhesive

These products are available with additional corrosion protection. For more information, see p. 14.

SD Many of these products are approved for installation with Strong-Drive® SD Connector screws. See pp. 348–352 for more information.

Model No.	Nails (in.)	Anchor Bolt	Allowable Loads (DF/SP)				Code Ref.
			Download (100)		Uplift (160)		
			Adhesive or Cast-in-Place	Support by a Nut	SET-3G®	AT-XP®	
EPB44PHDG	(8) 0.162 x 3½	¾	3,625	760	1,265	985	—

1. Loads may not be increased for duration of load.
2. Uplift loads require the threaded rod to be attached to cured concrete with SET-3G® or AT-XP® anchoring adhesive. Cast-in-place installations must have a nut and bearing plate embedded in concrete. Uplift loads do not apply when installed to a pier block.
3. Designer is responsible for concrete design.
4. Downloads shall be reduced where limited by capacity of the post.
5. Structural composite lumber columns have sides that show either the wide face or the edges of the lumber strands/veneers. For SCL columns, the fasteners for these products should always be installed in the wide face. See technical bulletin T-C-SCLCLM at **strongtie.com** for load reductions resulting from narrow-face installations.
6. Adhesive anchor design assumptions:
   (a) Uncracked dry concrete
   (b) Anchors not for use in SDC C–F where load combinations include earthquake load
   (c) Temperature range: Maximum short term temperature = 176°F, Maximum long term temperature = 110°F
   (d) Periodic special inspection assumed per code report
   (e) Minimum concrete strength of 2,500 psi
7. **Fasteners:** Nail dimensions are listed diameter by length. See pp. 21–22 for fastener information.

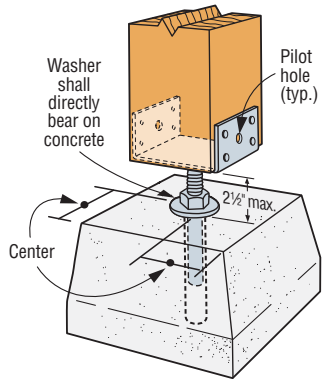

Typical EPB44PHDG Pier Block Installation
(supported by a nut)

C-C-2021 ©2021 SIMPSON STRONG-TIE COMPANY INC.

PB/PBS

Regular and Standoff Post Bases

The PBS features a 1" standoff height. It reduces the potential for decay at post and column ends.

Material: PB — 12 gauge; PBS — see table

Finish: Galvanized. Some products available in ZMAX® or HDG coating; see Corrosion Information, pp. 12–15.

Installation:

- Use all specified fasteners; see General Notes.
- Install either nails or bolts.
- Post bases do not provide adequate resistance to prevent members from rotating about the base and therefore are not recommended for non-top-supported installations (such as fences or unbraced carports).
- PB — Holes are provided for installation with either 0.162" x 3½" nails or ½" bolts for PB66 and PB66R; all other models use 0.162" x 3½" nails only. A 2" minimum sidecover is required to obtain the full load.
- PBS — Embed into wet concrete up to the bottom of the 1" standoff base plate. A 2" minimum side cover is required to obtain the full load. Holes in the bottom of the straps allow for free concrete flow.

Codes: See p. 11 for Code Reference Key Chart

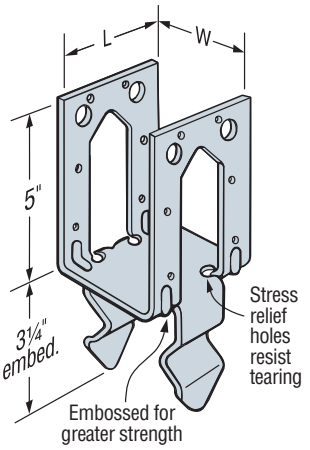

PB

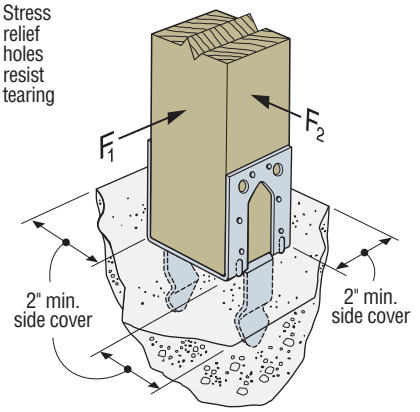

Typical PB Installation

These products are available with additional corrosion protection. For more information, see p. 14.

Model No.	Dimensions (in.) W	Dimensions (in.) L	Fasteners: Nails (in.)	Fasteners: Machine Bolts	Allowable Loads (160) Uncracked Uplift	Allowable Loads (160) Cracked Uplift	Download (100)	Code Ref.
Wind and Seismic Design Category A&B								
PB44	3 9/16	3¼	(12) 0.162 x 3½	N/A	850	850	12,685	IBC, FL, LA
PB44R	4	3¼	(12) 0.162 x 3½	N/A	850	850	12,685	
PB46	5½	3¼	(12) 0.162 x 3½	N/A	850	850	22,445	
PB66	5½	5¼	(12) 0.162 x 3½	(2) ½" dia.	850	850	25,270	
PB66R	6	5¼	(12) 0.162 x 3½	(2) ½" dia.	850	850	25,270	
Seismic Design Category C–F								
PB44	3 9/16	3¼	(12) 0.162 x 3½	N/A	850	850	12,685	IBC, FL, LA
PB44R	4	3¼	(12) 0.162 x 3½	N/A	850	850	12,685	
PB46	5½	3¼	(12) 0.162 x 3½	N/A	850	850	22,445	
PB66	5½	5¼	(12) 0.162 x 3½	(2) ½" dia.	850	850	25,270	
PB66R	6	5¼	(12) 0.162 x 3½	(2) ½" dia.	850	850	25,270	

1. Loads may not be increased for duration of load.
2. Concrete shall have a minimum compressive strength of f'_c = 2,500 psi.
3. Multiply Seismic and Wind ASD uplift and lateral load values by 1.43 or 1.67, respectively, to obtain LRFD capacities.
4. In accordance with IBC, Section 1613.1, detached one- and two-family dwellings in Seismic Design Category (SDC) C may use "Wind and SDC A&B" allowable loads.
5. Downloads shall be reduced where limited by capacity of the post.
6. For lateral loads for all PB models: F_1 allowable = 765 lb. F_2 allowable = 1,325 lb.
7. Designer is responsible for concrete design.
8. Structural composite lumber columns have sides that show either the wide face or the edges of the lumber strands/veneers known as the narrow face. Values in the tables reflect installation into the wide face. See technical bulletin T-C-SCLCLM at **strongtie.com** for load reductions resulting from narrow-face installations.
9. **Fasteners:** Nail dimensions are listed diameter by length. See pp. 21–22 for fastener information.

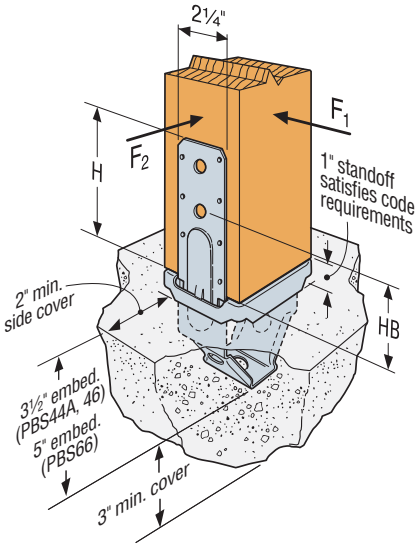

Typical PBS44A Installation

C-C-2021 ©2021 SIMPSON STRONG-TIE COMPANY INC.

Regular and Standoff Post Bases (cont.)

These products are available with additional corrosion protection. For more information, see p. 14.

SD Many of these products are approved for installation with Strong-Drive® SD Connector screws. See pp. 348–352 for more information.

Model No.	Nominal Post Size	Material (ga.)		Dimensions (in.)				Fasteners (in.)		Allowable Loads			Code Ref.
		Base	Strap	W	L	H	HB	Nails	Machine Bolts	Uncracked Uplift	Cracked Uplift	Download	
Wind and Seismic Design Category A&B													
PBS44A	4x4	12	14	3 9/16	3 1/2	6 1/4	3 7/16	(14) 0.162 x 3 1/2	(2) 1/2 dia.	1,235	865	6,665	IBC, FL, LA
PBS46	4x6	12	14	3 9/16	5 7/16	6 9/16	3 3/8	(14) 0.162 x 3 1/2	(2) 1/2 dia.	1,235	865	9,335	
PBS66	6x6	12	12	5 1/2	5 3/8	6 1/2	3 11/16	(14) 0.162 x 3 1/2	(2) 1/2 dia.	2,165	2,165	9,335	
Seismic Design Category C–F													
PBS44A	4x4	12	14	3 9/16	3 1/2	6 1/4	3 7/16	(14) 0.162 x 3 1/2	(2) 1/2 dia.	1,080	755	6,665	IBC, FL, LA
PBS46	4x6	12	14	3 9/16	5 7/16	6 9/16	3 3/8	(14) 0.162 x 3 1/2	(2) 1/2 dia.	1,080	755	9,335	
PBS66	6x6	12	12	5 1/2	5 3/8	6 1/2	3 11/16	(14) 0.162 x 3 1/2	(2) 1/2 dia.	2,165	2,165	9,335	

1. For higher downloads, pack grout solid under 1" standoff plate before installation. Base download on column or concrete, according to the code.
2. Concrete shall have a minimum compressive strength of f'_c = 2,500 psi.
3. Multiply Seismic and Wind ASD uplift and lateral load values by 1.43 or 1.67, respectively, to obtain LRFD capacities.
4. In accordance with IBC, Section 1613.1, detached one- and two-family dwellings in Seismic Design Category (SDC) C may use "Wind and SDC A&B" allowable loads.
5. Post bases do not provide adequate resistance to prevent members from rotating about the base and therefore are not recommended for installations that lack top support (such as fences or unbraced carports).
6. Downloads shall be reduced where limited by capacity of the post.
7. Designer is responsible for concrete design.
8. For lateral loads for all PBS models: F_1 allowable = 1,165 lb. when using nails and 230 lb. when using bolts. F_2 allowable = 835 lb. when using either nails or bolts.
9. Structural composite lumber columns have sides that show either the wide face or the edges of the lumber strands/veneers known as the narrow face. Values in the tables reflect installation into the wide face. See technical bulletin T-C-SCLCLM at **strongtie.com** for load reductions resulting from narrow-face installations.
10. **Fasteners:** Nail dimensions are listed diameter by length. See pp. 21–22 for fastener information.

C-C-2021 ©2021 SIMPSON STRONG-TIE COMPANY INC.

CBS/CBSQ

Column Bases

This product is preferable to similar connectors because of (a) easier installation, (b) higher loads, (c) lower installed cost, or a combination of these features.

The CBS column base installs with bolts and provides tested capacity. The CBSQ uses Strong-Drive® SDS Heavy-Duty Connector screws (included), which allow for fast installation, reduced reveal and high capacity, and provides a greater net section area of the column compared to bolts. Both CBS and CBSQ provide 1" standoff to meet code requirements for structural posts installed in basements or exposed to weather or water splash.

Material: See table

Finish: Galvanized; available in HDG

Installation:

- Use all specified fasteners; see General Notes.
- For CBS, install with two bolts.
- For CBSQ, install ¼" x 2" Strong-Drive SDS Heavy-Duty Connector screws, which are provided with the column base. (Lag screws will not achieve the same load.)
- Install CBS/CBSQ with bottom of standoff flush to top of concrete.
- For full loads, a minimum of 3" side cover shall be provided.
- Post bases do not provide adequate resistance to prevent members from rotating about the base and therefore are not recommended for non-top-supported installations (such as fences or unbraced carports).

Ordering:

- To order the CBSQ with screws, specify CBSQ-SDS2
- To order the CBSQ without screws, specify CBSQ

Codes: See p. 11 for Code Reference Key Chart

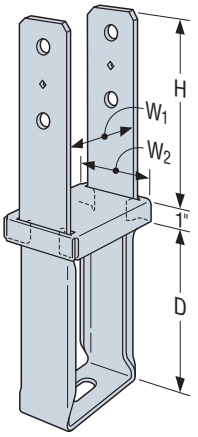

CBS

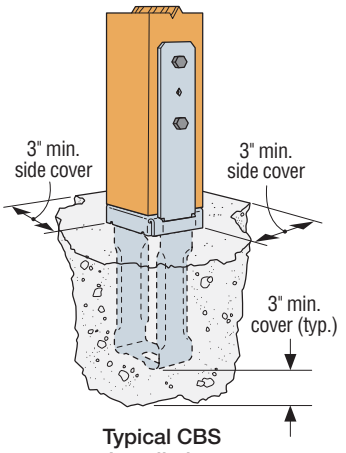

Typical CBS Installation

These products are available with additional corrosion protection. For more information, see p. 14.

Model No.	Nominal Column Size	Material		Dimensions (in.)				Machine Bolts		Allowable Loads (DF/SP)			Code Ref.
		Base (ga.)	Strap (ga. x Width)	W_1	W_2	D	H	Qty.	Dia. (in.)	Uncracked Uplift	Cracked Uplift	Download	
Wind and Seismic Design Category A&B													
CBS44	4x4	12	10 ga. x 2¼	3 9/16	3½	7⅛	8⅜	2	⅝	5,390	4,650	10,975	—
CBS46	4x6	12	10 ga. x 3	3 9/16	5 5/16	7 13/16	8 11/16	2	⅝	5,390	4,650	14,420	
CBS66	6x6	12	10 ga. x 3	5½	5½	6⅞	8¾	2	⅝	4,375	3,060	14,420	
Seismic Design Category C–F													
CBS44	4x4	12	10 ga. x 2¼	3 9/16	3½	7⅛	8⅜	2	⅝	5,390	4,070	10,975	—
CBS46	4x6	12	10 ga. x 3	3 9/16	5 5/16	7 13/16	8 11/16	2	⅝	5,390	4,070	14,420	
CBS66	6x6	12	10 ga. x 3	5½	5½	6⅞	8¾	2	⅝	3,830	2,680	14,420	

1. Loads may not be increased for duration of load.
2. For higher downloads, pack grout solid under 1" standoff plate before installation. Base download on column or concrete, according to the code.
3. Concrete shall have a minimum compressive strength of f'_c = 2,500 psi.
4. Multiply Seismic and Wind ASD uplift and lateral load values by 1.43 or 1.67, respectively, to obtain LRFD capacities.
5. In accordance with IBC, Section 1613.1, detached one- and two-family dwellings in Seismic Design Category (SDC) C may use "Wind and SDC A&B" allowable loads.
6. Downloads shall be reduced where limited by capacity of the post.
7. Designer is responsible for concrete design.
8. Structural composite lumber columns have sides that show either the wide face or the edges of the lumber strands/veneers known as the narrow face. Values in the tables reflect installation into the wide face. See technical bulletin T-C-SCLCLM at **strongtie.com** for load reductions resulting from narrow-face installations.

C-C-2021 ©2021 SIMPSON STRONG-TIE COMPANY INC.

CBSQ

Column Bases (cont.)

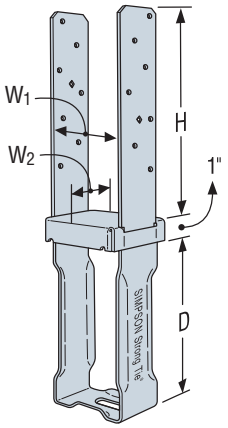

CBSQ-SDS2

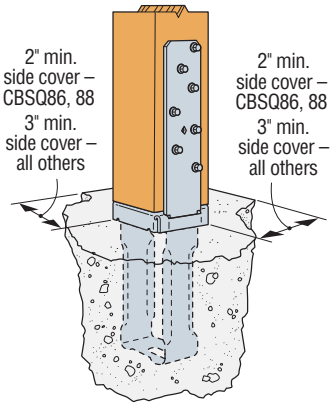

Typical CBSQ-SDS2 Installation

These products are available with additional corrosion protection. For more information, see p. 14.

SS For stainless-steel fasteners, see p. 21.

	Model No.	Nominal Column Size	Material		Dimensions (in.)				Fasteners (in.)	Allowable Loads DF/SP			Code Ref.
			Base (ga.)	Strap (ga. x Width)	W_1	W_2	D	H		Uncracked Uplift	Cracked Uplift	Download	
	Wind and Seismic Design Category A&B												
SS	CBSQ44-SDS2	4x4	12	10 ga. x 2¼	3 9/16	3½	7⅛	8⅜	(14) ¼ x 2 SDS	5,390	4,650	10,975	IBC, FL, LA
SS	CBSQ46-SDS2	4x6	12	10 ga. x 3	3 9/16	5 5/16	7 13/16	8 11/16	(14) ¼ x 2 SDS	5,390	4,650	14,420	
SS	CBSQ66-SDS2	6x6	12	10 ga. x 3	5½	5½	6⅞	8¾	(14) ¼ x 2 SDS	4,375	3,060	14,420	
	CBSQ86-SDS2	6x8	12	8 ga. x 3	7½	5⅜	6⅛	8 11/16	(12) ¼ x 2 SDS	3,815	2,670	20,915	
	CBSQ88-SDS2	8x8	12	8 ga. x 3	7½	7⅜	6⅛	8 11/16	(12) ¼ x 2 SDS	3,815	2,670	22,225	
	Seismic Design Category C–F												
SS	CBSQ44-SDS2	4x4	12	10 ga. x 2¼	3 9/16	3½	7⅛	8⅜	(14) ¼ x 2 SDS	5,390	4,070	10,975	IBC, FL, LA
SS	CBSQ46-SDS2	4x6	12	10 ga. x 3	3 9/16	5 5/16	7 13/16	8 11/16	(14) ¼ x 2 SDS	5,390	4,070	14,420	
SS	CBSQ66-SDS2	6x6	12	10 ga. x 3	5½	5½	6⅞	8¾	(14) ¼ x 2 SDS	3,830	2,680	14,420	
	CBSQ86-SDS2	6x8	12	8 ga. x 3	7½	5⅜	6⅛	8 11/16	(12) ¼ x 2 SDS	3,340	2,335	20,915	
	CBSQ88-SDS2	8x8	12	8 ga. x 3	7½	7⅜	6⅛	8 11/16	(12) ¼ x 2 SDS	3,340	2,335	22,225	

1. Loads may not be increased for duration of load.
2. For higher downloads, pack grout solid under 1" standoff plate before installation. Base download on column or concrete, according to the code.
3. Concrete shall have a minimum compressive strength of f'_c = 2,500 psi.
4. Multiply Seismic and Wind ASD uplift and lateral load values by 1.43 or 1.67, respectively, to obtain LRFD capacities.
5. In accordance with IBC, Section 1613.1, detached one- and two-family dwellings in Seismic Design Category (SDC) C may use "Wind and SDC A&B" allowable loads.
6. Downloads shall be reduced where limited by capacity of the post.
7. Designer is responsible for concrete design.
8. Structural composite lumber columns have sides that show either the wide face or the edges of the lumber strands/veneers known as the narrow face. Values in the tables reflect installation into the wide face. See technical bulletin T-C-SCLCLM at **strongtie.com** for load reductions resulting from narrow-face installations.
9. **Fasteners:** SDS screws are Simpson Strong-Tie® Strong-Drive® SDS Heavy-Duty Connector screws. See pp. 21–22 for fastener information.

C-C-2021 ©2021 SIMPSON STRONG-TIE COMPANY INC.

CB

Column Base

Material: Strap: CB4x, CB5x, CB6x — 7 gauge; CB7x and larger — 3 gauge. Base: CB4x through CB9x — 7 gauge; CB10x — 3 gauge

Finish: CB44, CB46, CB48, CB66, CB68, CB610 — galvanized; all other CB — Simpson Strong-Tie gray paint or HDG. Some products available in HDG, stainless steel or black powder coat. (Note: When ordering powder coat, model number is CBxxPC)

Installation:

- Use all specified fasteners; see General Notes
- For full loads, minimum side cover required is 3" for CB
- Install all models with bottom of base plate flush with concrete
- Post bases do not provide adequate resistance to prevent members from rotating about the base and therefore are not recommended for non-top-supported installations (such as fences or unbraced carports)

Options:

- CB is available in rough sizes. Other sizes available for CB; specify W_1 and W_2 dimensions. Consult Simpson Strong-Tie for bolt sizes and allowable loads.

Codes: See p. 11 for Code Reference Key Chart

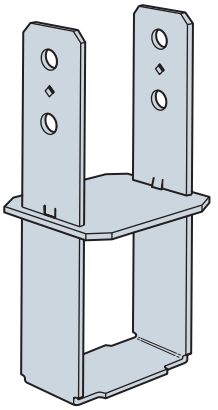

CB44
(CB46, CB48, CB64, CB66, CB68, CB86, CB88, CB610 similar)
(Standard finish – G90)

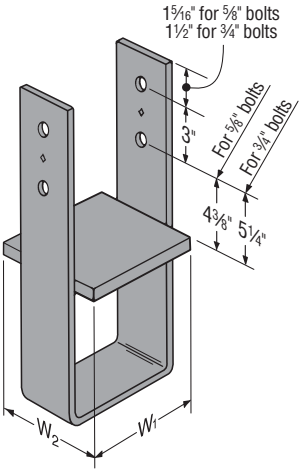

Configuration of all other CB sizes
(Standard finish – gray paint)

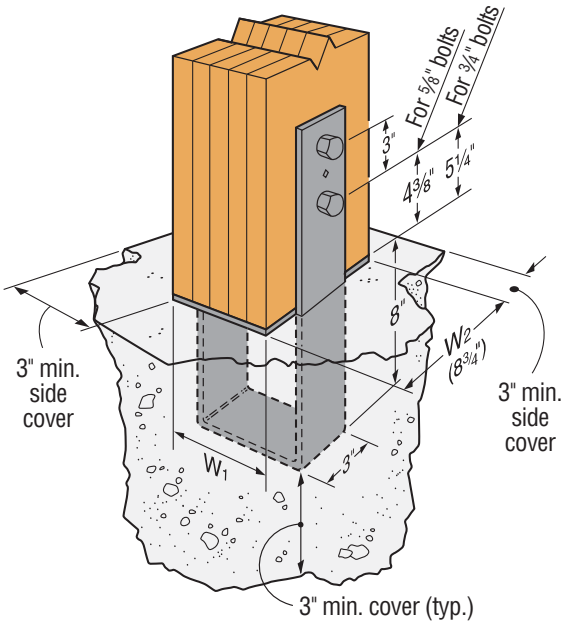

CB9
(CB5, CB7 similar)
for Glulam Column

C-C-2021 ©2021 SIMPSON STRONG-TIE COMPANY INC.

Column Base (cont.)

These products are available with additional corrosion protection. For more information, see p. 14.

SS For stainless-steel fasteners, see p. 21.

	Model No.	Nominal Column Size	Dimensions (in.)		Column Fasteners		Allowable Uplift Loads DF/SP/SPF/HF (160)				Download (100)	Code Ref.
					Bolts		Wind and SDC A&B		SDC C–F			
			W_1	W_2	Qty.	Dia. (in.)	Uncracked	Cracked	Uncracked	Cracked		
SS	CB44	4x4	3 9/16	3 9/16	2	5/8	6,110	4,510	5,640	3,945	19,020	IBC, FL, LA
SS	CB46	4x6	3 9/16	5 1/2	2	5/8	6,110	4,510	5,640	3,945	28,585	
	CB48	4x8	3 9/16	7 1/2	2	5/8	6,110	4,510	5,640	3,945	35,970	
	CB5-4.5	Glulam	4 1/2	5 1/8	2	5/8	6110	4,510	5,640	3,945	38,055	—
	CB5-6	Glulam	6	5 1/8	2	5/8	6110	4,510	5,640	3,945	50,740	
	CB64	6x4	5 1/2	3 9/16	2	5/8	6,110	4,510	5,640	3,945	28,585	
SS	CB66	6x6	5 1/2	5 1/2	2	5/8	6,110	4,510	5,640	3,945	30,250	IBC, FL, LA
	CB6-7	6x	5 1/2	7	2	5/8	6,110	4,510	5,640	3,945	38,500	—
	CB68	6x8	5 1/2	7 1/2	2	5/8	6,110	4,510	5,640	3,945	41,250	IBC, FL, LA
	CB610	6x10	5 1/2	9 1/2	2	5/8	6,445	4,510	5,640	3,945	52,250	—
	CB612	6x12	5 1/2	11 1/2	2	5/8	6,445	4,510	5,640	3,945	63,250	
	CB7 1/8-4	PSL	7 1/8	3 1/2	2	3/4	6,445	4,510	5,640	3,945	41,145	
	CB7 1/8-6	PSL	7 1/8	5 1/2	2	3/4	6,445	4,510	5,640	3,945	64,660	
	CB7 1/8-7	PSL	7 1/8	7	2	3/4	6,445	4,510	5,640	3,945	78,410	
	CB7-6	Glulam	6	6 3/4	2	3/4	6,445	4,510	5,640	3,945	66,825	
	CB7-7.5	Glulam	7 1/2	6 3/4	2	3/4	6,445	4,510	5,640	3,945	79,345	
	CB7-9	Glulam	9	6 3/4	2	3/4	6,445	4,510	5,640	3,945	91,620	
	CB7-10.5	Glulam	10 1/2	6 3/4	2	3/4	6,445	4,510	5,640	3,945	103,790	
	CB86	8x6	7 1/2	5 1/2	2	3/4	6,110	4,510	5,640	3,945	41,250	
	CB88	8x8	7 1/2	7 1/2	2	3/4	6,445	4,510	5,640	3,945	56,250	
	CB810	8x10	7 1/2	9 1/2	2	3/4	6,445	4,510	5,640	3,945	71,250	
	CB812	8x12	7 1/2	11 1/2	2	3/4	6,445	4,510	5,640	3,945	86,250	
	CB9-6	Glulam	6	8 3/4	2	3/4	6,445	4,510	5,640	3,945	81,940	
	CB9-7.5	Glulam	7 1/2	8 3/4	2	3/4	6,445	4,510	5,640	3,945	97,165	
	CB9-9	Glulam	9	8 3/4	2	3/4	6,445	4,510	5,640	3,945	112,200	
	CB9-10.5	Glulam	10 1/2	8 3/4	2	3/4	6,445	4,510	5,640	3,945	127,105	
	CB1010	10x10	9 1/2	9 1/2	2	3/4	6,445	4,510	5,640	3,945	90,250	
	CB1012	10x12	9 1/2	11 1/2	2	3/4	6,445	4,510	5,640	3,945	109,250	
	CB1212	12x12	11 1/2	11 1/2	2	3/4	6,445	4,510	5,640	3,945	132,250	

1. Uplift loads may not be increased for duration of load.
2. Concrete shall have a minimum compressive strength of f'_c = 2,500 psi.
3. Multiply Seismic and Wind ASD uplift and lateral load values by 1.43 or 1.67, respectively, to obtain LRFD capacities.
4. In accordance with IBC, Section 1613.1, detached one- and two-family dwellings in Seismic Design Category (SDC) C may use "Wind and SDC A&B" allowable loads.
5. Downloads shall be reduced where limited by capacity of the post.
6. Designer is responsible for concrete design.
7. All references to bolts are for structural quality through bolts (not lag screws or carriage bolts) equal to or better than ASTM A307, Grade A.
8. Tabulated allowable download is based on capacity determined from following compression-parallel-to-grain stress ($F_{c\|}$) for wood post: 1,650 psi for glulam, 1,350 psi for 4"-wide sawn lumber, and 1,000 psi for 5"-wide or wider sawn lumber, as applicable.

C-C-2021 ©2021 SIMPSON STRONG-TIE COMPANY INC.

MPBZ

Moment Post Base

The patent-pending MPBZ is specifically designed to provide moment resistance for columns or posts. An innovative overlapping sleeve design encapsulates the post, helping to resist rotation around its base. It is available for 4x4, 6x6 and 8x8 posts. The MPBZ is ideal for outdoor structures, such as carports, fences and decks. Built-in stand-off tabs provide the required 1" stand-off to resist decay of the post while eliminating multiple parts and assembly. Additionally, the MPBZ is available in ZMAX® as the standard finish to meet exposure conditions in many environments.

Features:

- Internal top-of-concrete tabs
- 1" standoff tabs
- Additional holes provided to attach trim material
- Weep hole provided for water drainage

Material: 12 gauge

Finish: ZMAX coating

Installation:

- Use all specified fasteners; see General Notes.
- Install MPBZ before concrete is placed using embedment level indicators and form board attachment holes.
- Place post on tabs 1" above top of concrete.
- Install Strong-Drive SDS Heavy-Duty Connector screws, which are supplied with the MPBZ. (Lag screws will not achieve the same load.)
- Concrete level inside the part must not exceed ¼" above embedment line to allow for water drainage.
- Annual inspection of connectors used in outdoor application is advised. If significant corrosion is apparent or suspected, then the wood, fasteners and connectors should be evaluated by a qualified engineer or inspector.

Codes: See p. 11 for Code Reference Key Chart

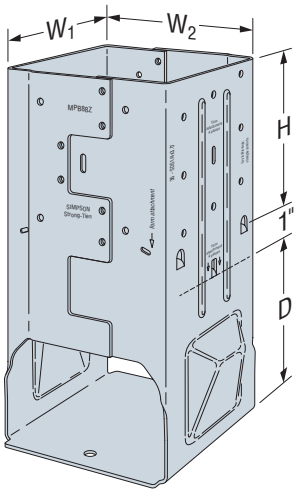

MPB88Z
(MPB44Z, MPB66Z similar)
US Patent Pending

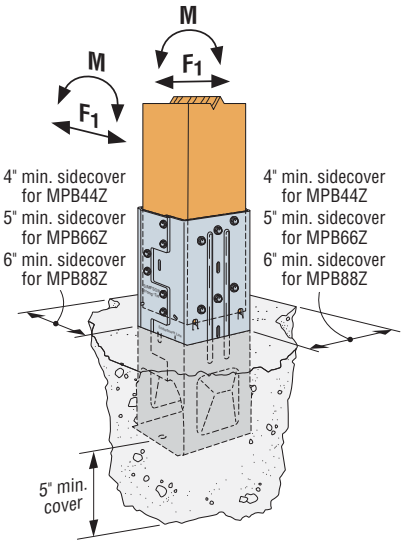

Typical MPB66Z Non-Reinforced Installation
(others similar)

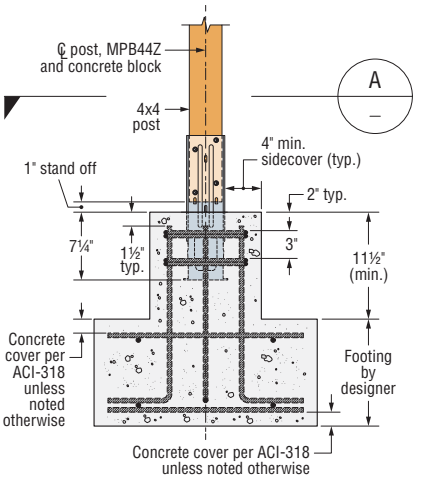

SECTION A

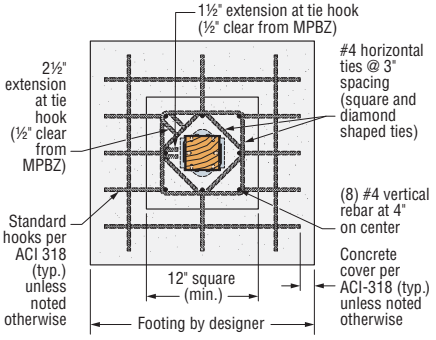

MPB44Z
Reinforced Concrete Footing

Footing (size and reinforcement) by designer. Standard hook geometry in accordance with ACI 318 unless noted otherwise.

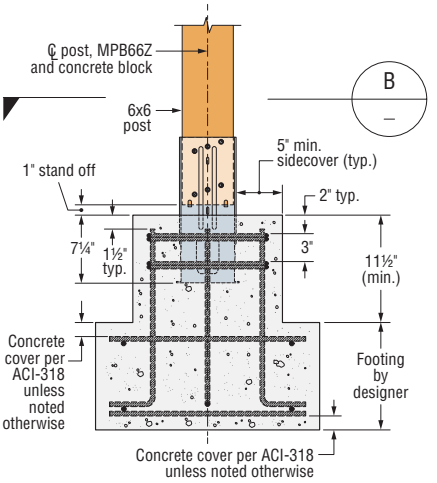

SECTION B

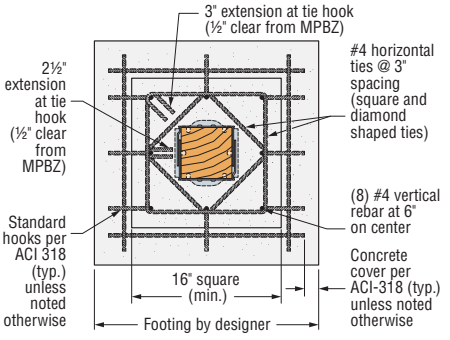

MPB66Z
Reinforced Concrete Footing

Footing (size and reinforcement) by designer. Standard hook geometry in accordance with ACI 318 unless noted otherwise.

These reinforced MPBZ details are available on **strongtie.com/mpbz**.

C-C-2021 ©2021 SIMPSON STRONG-TIE COMPANY INC.

Moment Post Base (cont.)

These products are available with additional corrosion protection. For more information, see p. 14.

Model No.	Nominal Column Size	Dimensions (in.)			Strong-Drive® SDS Screws	Concrete Allowable Loads						Wood Assembly Allowable Loads (DF/SP)			Rotational Stiffness (in.-lb./rad.)	Code Ref.
						Uplift		Lateral F_1		Moment M (ft.-lb.)		Download (100)	Download (160)	Moment M (ft.-lb.) (160)		
		W_1 / W_2	D	H		Uncracked	Cracked	Uncracked	Cracked	Uncracked	Cracked					
Non-Reinforced Concrete																
Wind and Seismic Design Category A&B																
MPB44Z	4x4	3 9/16	7¼	7¼	(16) ¼" x 2½"	4,900	3,820	1,750	1,225	1,350	945	6,240	6,410	1,520	1,245,000	IBC, FL, LA
MPB66Z	6x6	5 9/16	7¼	7¼	(24) ¼" x 2½"	5,815	5,815	3,435	2,405	2,680	1,875	9,360	10,855	3,730	2,405,000	
MPB88Z	8x8	7 9/16	7¼	7¼	(36) ¼" x 3"	11,860	9,315	7,200	5,560	4,160	2,910	15,120	17,690	4,560	5,515,000	
Seismic Design Category C–F																
MPB44Z	4x4	3 9/16	7¼	7¼	(16) ¼" x 2½"	4,785	3,350	1,535	1,075	1,180	830	6,240	6,410	1,520	1,245,000	IBC, FL, LA
MPB66Z	6x6	5 9/16	7¼	7¼	(24) ¼" x 2½"	5,815	5,815	3,015	2,110	2,055	1,645	9,360	10,855	3,730	2,405,000	
MPB88Z	8x8	7 9/16	7¼	7¼	(36) ¼" x 3"	10,155	8,165	6,965	4,875	3,470	2,550	15,120	17,690	4,560	5,515,000	
Reinforced Concrete																
Wind and Seismic Design Category A&B																
MPB44Z	4x4	3 9/16	7¼	7¼	(16) ¼" x 2½"	4,900	3,820	1,750	1,225	1,520	1,520	6,240	6,410	1,520	1,245,000	IBC, FL, LA
MPB66Z	6x6	5 9/16	7¼	7¼	(24) ¼" x 2½"	5,815	5,815	3,435	2,405	3,730	3,190	9,360	10,855	3,730	2,405,000	
MPB88Z	8x8	7 9/16	7¼	7¼	(36) ¼" x 3"	11,860	9,315	7,200	5,560	4,560	4,560	15,120	17,690	4,560	5,515,000	
Seismic Design Category C–F																
MPB44Z	4x4	3 9/16	7¼	7¼	(16) ¼" x 2½"	4,785	3,350	1,535	1,075	1,520	1,520	6,240	6,410	1,520	1,245,000	IBC, FL, LA
MPB66Z	6x6	5 9/16	7¼	7¼	(24) ¼" x 2½"	5,815	5,815	3,015	2,110	3,350	2,795	9,360	10,855	3,730	2,405,000	
MPB88Z	8x8	7 9/16	7¼	7¼	(36) ¼" x 3"	10,155	8,165	6,965	4,875	4,560	4,560	15,120	17,690	4,560	5,515,000	

1. Loads may not be increased for duration of load.
2. Higher download can be achieved by solidly packing grout in the 1" standoff area before installation of the post. Allowable download shall be based on either the wood post design or the concrete design calculated per code.
3. Concrete shall have a minimum compressive strength of f'_c = 2,500 psi.
4. Tabulated rotational stiffness accounts for the rotation of the base assembly attributable to deflection of the connector, fastener slip, and post deformation. Designer must account for additional deflection attributable to bending of the post.
5. Multiply Seismic and Wind ASD uplift and lateral load values by 1.43 or 1.67, respectively, to obtain LRFD capacities.
6. In accordance with IBC, Section 1613.1, detached one- and two-family dwellings in Seismic Design Category (SDC) C may use "Wind and SDC A&B" allowable loads.
7. Foundation dimensions are for anchorage only. Foundation design (size and reinforcement) by designer.
8. Allowable load shall be the lesser of the wood assembly or concrete allowable load. To achieve full wood assembly allowable moment loads, additional concrete design and reinforcement by designer is required.
9. For loading simultaneously in more than one direction, the allowable load must be evaluated using the following equation: (Design Uplift / Allowable Uplift, or Design Download / Allowable Download) + (Design Moment / Allowable Moment) + (Design Lateral / Allowable Lateral) ≤ 1.0.
10. To account for shrinkage up to 3%, multiply rotational stiffness by 0.75. Reduction may be linearly interpolated for shrinkage less than 3%.
11. Tabulated load values may be used for rough sawn lumber or larger size posts without reduction factors. Rough-size and larger-size posts shall be planed uniformly on all four sides such that centerline of post is concentric with the center line of MPBZ.

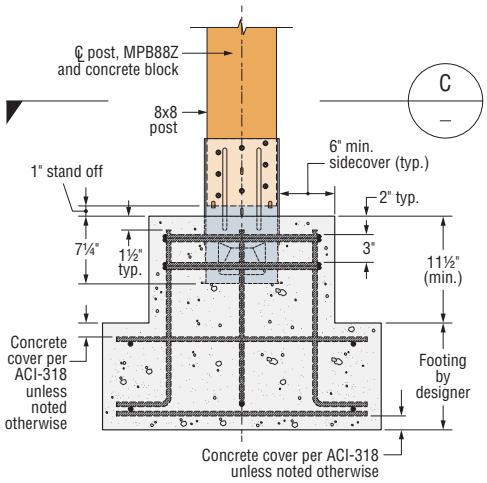

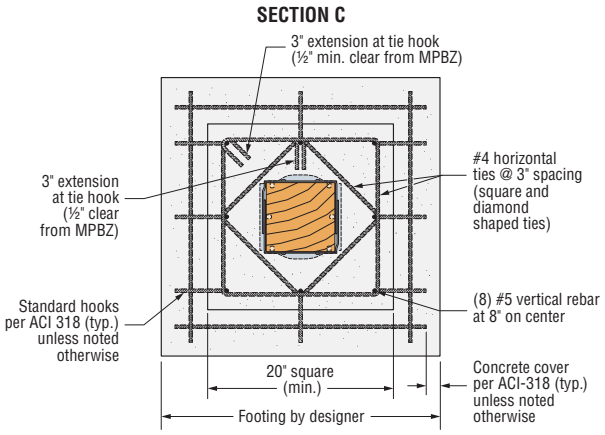

MPB88Z
Reinforced Concrete Footing

Footing (size and reinforcement) by designer. Standard hook geometry in accordance with ACI 318 unless noted otherwise.

C-C-2021 ©2021 SIMPSON STRONG-TIE COMPANY INC.

PPBZ

Porch Post Base

The PPBZ porch base offers a simplified, one-time installation designed to support permanent porch framing throughout all stages of construction. This design eliminates the need for temporary vertical support and streamlines the subcontractor scheduling process while still providing adequate safety to enable full access for installers/inspectors.

The porch post base is fastened to the footing with two Titen Turbo™ masonry screws when framing the porch roof. Then, when the time is right, the concrete contractor is able to complete the last phase of the porch slab without the interference of temporary vertical support and without the framer having to return to the jobsite after the slab has hardened. Designed to withstand vertical construction loads prior to embedment in concrete, the PPBZ will support the weight of most framed porches and overhangs.

Features:

- Stiffened embedded side stirrups provide temporary vertical download support without being embedded into concrete
- 1" standoff reduces the potential for decay at post or column ends
- Two available sizes provide both 4"- and 6"-slab thicknesses
- Pre-pour installation eliminates temporary support
- No disruption in scheduling
- Eliminates additional move-ins by trades and certain inspection call backs

Material: 12 gauge

Finish: ZMAX® coating

Installation:

- Use all specified fasteners; see General Notes.
- Locate and place PPBZ on footing according to framing plans.
- Secure PPBZ to footing with two (¼" dia. x 1¼" long hex-head) Titen Turbo concrete screws (sold separately) located a minimum of 1½" from the edge of concrete.
- Attach 4x4 post to PPBZ using (12) 0.148" x 3" nails. After bracing the top and bottom of the post from lateral movement, the post may then be loaded in download or uplift.
- When ready, pour concrete porch slab (4" or 6") up to the bottom of the standoff base while maintaining minimum 1" concrete side coverage.

Codes: See p. 11 for Code Reference Key Chart

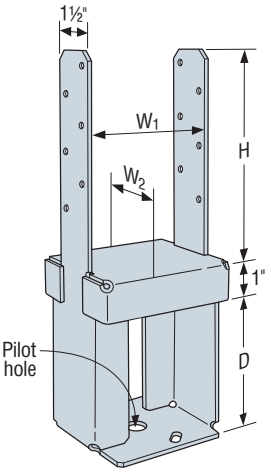

PPB44-4Z
(other sizes similar)

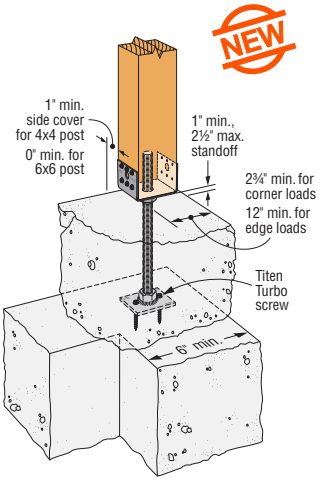

PPBF44 Installed
*(For an adjustable porch post base, see **strongtie.com/ppbf**)*

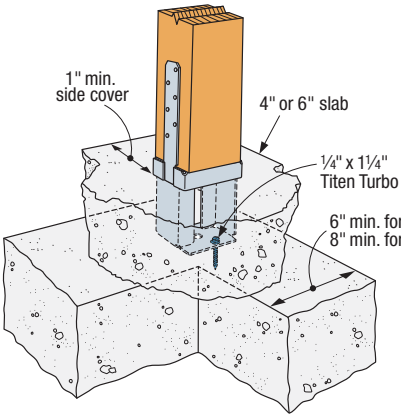

Typical PPB44-4Z Installation

These products are available with additional corrosion protection. For more information, see p. 14.

Model No.	Nominal Column Size	Dimensions (in.)				Fasteners (in.)		Allowable Loads (DF/SP/SPF/HF)					Code Ref.
								Prior to Pour		Embedded into Concrete			
										Uplift (160)		Down (100)	
		W_1	W_2	D	H	Foundation	Post	Uplift (160)	Down (100)	Uncracked	Cracked		
Wind and Seismic Design Category A&B													
PPB44-4Z	4x4	3⅝	3⅜	4	5¾	(2) ¼ x 1¼ Titen Turbo	(12) 0.148 x 3	220	4,720	1,420	995	7,830	IBC, FL, LA
PPB44-6Z	4x4	3⅝	3⅜	6	5¾	(2) ¼ x 1¼ Titen Turbo	(12) 0.148 x 3	220	4,295	2,105	2,105	10,505	
PPB66-4Z	6x6	5⅝	5³⁄₁₆	4	5¾	(2) ¼ x 1¼ Titen Turbo	(12) 0.148 x 3	220	6,545	1,420	995	7,830	—
PPB66-6Z	6x6	5⅝	5³⁄₁₆	6	5¾	(2) ¼ x 1¼ Titen Turbo	(12) 0.148 x 3	220	6,110	2,105	2,105	10,505	
Seismic Design Category C–F													
PPB44-4Z	4x4	3⅝	3⅜	4	5¾	(2) ¼ x 1¼ Titen Turbo	(12) 0.148 x 3	220	4,720	1,245	870	7,830	IBC, FL, LA
PPB44-6Z	4x4	3⅝	3⅜	6	5¾	(2) ¼ x 1¼ Titen Turbo	(12) 0.148 x 3	220	4,295	2,105	1,895	10,505	
PPB66-4Z	6x6	5⅝	5³⁄₁₆	4	5¾	(2) ¼ x 1¼ Titen Turbo	(12) 0.148 x 3	220	6,545	1,245	870	7,830	—
PPB66-6Z	6x6	5⅝	5³⁄₁₆	6	5¾	(2) ¼ x 1¼ Titen Turbo	(12) 0.148 x 3	220	6,110	2,105	1,895	10,505	

1. Loads may not be increased for duration of load.
2. Concrete shall have a minimum compressive strength of f'_c = 2,500 psi.
3. Multiply Seismic and Wind ASD uplift and lateral load values by 1.43 or 1.67, respectively, to obtain LRFD capacities.
4. In accordance with IBC, Section 1613.1, detached one- and two-family dwellings in Seismic Design Category (SDC) C may use "Wind and SDC A&B" allowable loads.
5. Downloads shall be reduced where limited by capacity of the post.
6. Designer is responsible for concrete design.
7. For full loads, 1" concrete side cover is required on all sides.
8. Structural composite lumber columns have sides that show either the wide face or the edges of the lumber strands/veneers known as the narrow face. Values in the tables reflect straps nailed to the wide face. Do not nail PPBZ straps to the narrow face of SCL columns.
9. **Fasteners:** Nail dimensions are listed diameter by length. See pp. 21–22 for fastener information.

C-C-2021 ©2021 SIMPSON STRONG-TIE COMPANY INC.

BC/BCS

Post Caps

The BCS allows for the connection of (2) 2x's to a 4x post or (3) 2x's to a 6x post. Double-shear nailing between beam and post gives added strength. The BC series offers dual purpose post cap/base for light cap or base connections.

Material: 18 gauge

Finish: Galvanized. Some products available in ZMAX® coating. See Corrosion Information, pp. 12–15.

Installation:

- Use all specified fasteners; see General Notes
- Do not install bolts into pilot holes
- BCS — Install dome nails on beam; drive nails at an angle through the beam into the post below to achieve the table loads
- BC — Install with 0.162" x 3½" nails or 0.162" x 2½" nails
- Post bases do not provide adequate resistance to prevent members from rotating about the base and therefore are not recommended for non-top-supported installations (such as fences or unbraced carports)
- To tie multiple 2x members together, the designer must determine the fasteners required to join members to act as one unit without splitting the wood

Codes: See p. 11 for Code Reference Key Chart

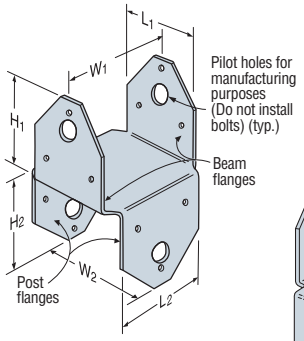

BC4 Cap/Base
(BC6 similar)

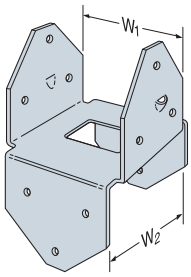

BCS2-2/4

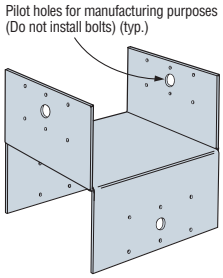

BC8 Cap/Base

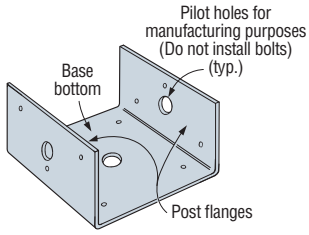

BC60 Half Base
(other similar)

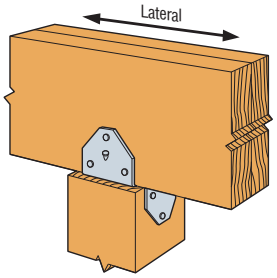

Typical BCS Installation

These products are available with additional corrosion protection. For more information, see p. 14.

SS For stainless-steel fasteners, see p. 21.

SD Many of these products are approved for installation with Strong-Drive® SD Connector screws. See pp. 348–352 for more information.

	Model No.	Dimensions (in.)						Fasteners (in.)			Allowable Loads (DF/SP) (160)		Code Ref.
		W_1	W_2	L_1	L_2	H_1	H_2	Beam Flange	Post Flange	Base Bottom	Uplift	Lateral	
	Caps												
SS	BC4	3 9/16	3 9/16	2 7/8	2 7/8	3	3	(6) 0.162 x 3 1/2	(6) 0.162 x 3 1/2	—	605	1,000	IBC, FL, LA
	BC46	3 9/16	5 1/2	4 7/8	2 7/8	3 1/2	2 1/2	(12) 0.162 x 3 1/2	(6) 0.162 x 3 1/2	—	945	1,000	
	BC4R	4	4	4	4	3	3	(12) 0.162 x 3 1/2	(12) 0.162 x 3 1/2	—	605	1,000	
SS	BC6	5 1/2	5 1/2	4 3/8	4 3/8	3 3/8	3 3/8	(12) 0.162 x 3 1/2	(12) 0.162 x 3 1/2	—	1,185	1,825	
	BC6R	6	6	6	6	3	3	(12) 0.162 x 3 1/2	(12) 0.162 x 3 1/2	—	1,185	1,825	
	BC8	7 1/2	7 1/2	7 1/2	7 1/2	4	4	(12) 0.162 x 3 1/2	(12) 0.162 x 3 1/2	—	1,660	1,825	
SS	BCS2-2/4	3 1/8	3 9/16	2 7/8	2 7/8	2 15/16	2 15/16	(8) 0.148 x 3	(6) 0.148 x 3	—	895	890	
SS	BCS2-3/6	4 5/8	5 9/16	4 3/8	2 7/8	3 5/16	2 15/16	(12) 0.162 x 3 1/2	(6) 0.162 x 3 1/2	—	895	1,330	
	Bases												
SS	BC40	3 9/16	—	3 1/4	—	2 1/4	—	—	(6) 0.162 x 3 1/2	(4) 0.162 x 3 1/2	510	735	—
	BC40R	4	—	4	—	3	—	—	(6) 0.162 x 3 1/2	(4) 0.162 x 3 1/2	510	735	
	BC460	5 1/2	—	3 3/8	—	3	—	—	(6) 0.162 x 3 1/2	(4) 0.162 x 3 1/2	450	735	
	BC60	5 1/2	—	5 1/2	—	3	—	—	(6) 0.162 x 3 1/2	(4) 0.162 x 3 1/2	450	735	
	BC60R	6	—	6	—	3	—	—	(6) 0.162 x 3 1/2	(4) 0.162 x 3 1/2	450	735	
	BC80	7 1/2	—	7 1/2	—	4	—	—	(6) 0.162 x 3 1/2	(4) 0.162 x 3 1/2	450	735	
	BC80R	8	—	8	—	4	—	—	(6) 0.162 x 3 1/2	(4) 0.162 x 3 1/2	450	735	

1. Allowable loads have been increased for wind or earthquake loading with no further increase allowed. Reduce where other loads govern.
2. Structural composite lumber columns have sides that show either the wide face or the edges of the lumber strands/veneers known as the narrow face. Values in the tables reflect installation into the wide face. See technical bulletin T-C-SCLCLM at **strongtie.com** for load reductions resulting from narrow-face installations.
3. Base allowable loads assume that nails have full penetration into the supporting member. Loads do not apply to end-grain post installations.
4. **Fasteners:** Nail dimensions are listed diameter by length. See pp. 21–22 for fastener information.

C-C-2021 ©2021 SIMPSON STRONG-TIE COMPANY INC.

AC/LPCZ/LCE/RTC

Post Caps

The universal design of the LCE4 post cap provides high capacity while eliminating the need for rights and lefts. For use with 4x or 6x lumber. LPCZ — Adjustable design allows greater connection versatility.

Material: LCE4 — 20 gauge;
AC, LPC4Z — 18 gauge;
LPC6Z — 16 gauge;
RTC — 14 gauge

Finish: Galvanized.
Some products available in ZMAX® coating and stainless steel.
See Corrosion Information, pp. 12–15.

Installation:

- Use all specified fasteners; see General Notes
- Install all models in pairs, except RTC. LPCZ — 2½" beams may be used if 0.148" x 1½" nails are substituted for 0.148" x 3" nails

Codes: See p. 11 for Code Reference Key Chart

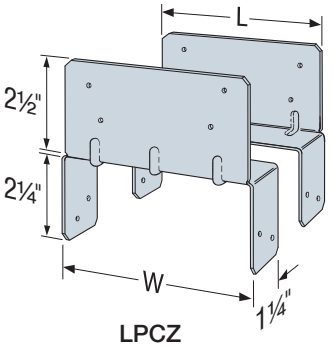

LPCZ

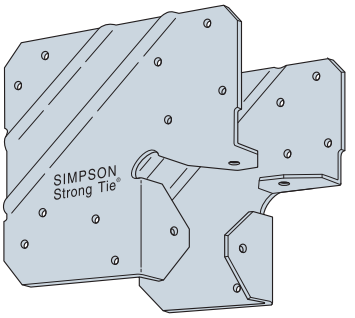

LCE4

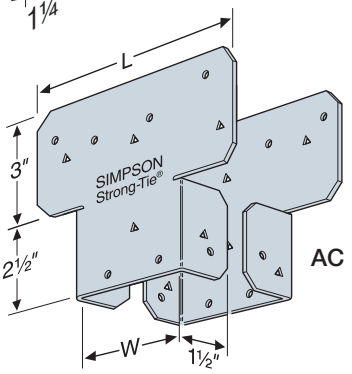

AC

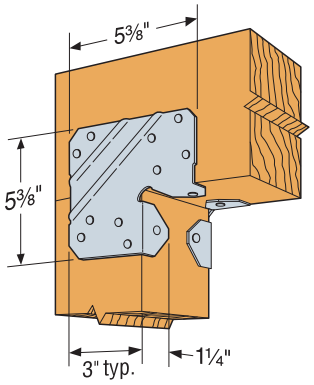

Typical LCE4 Installation
(for 4x or 6x lumber)

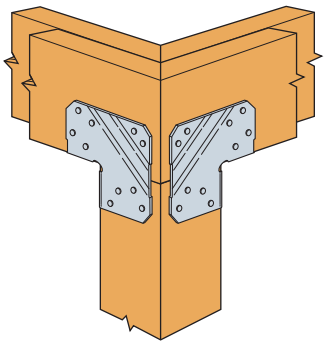

Typical LCE4 Corner Installation
(mitered corner)

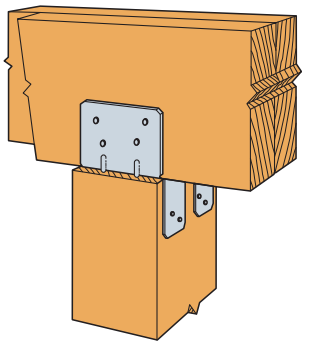

Typical LPC4Z Installation
(mitered corner)

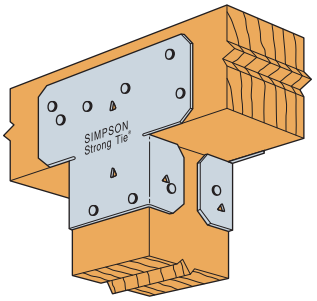

Typical AC4 Installation

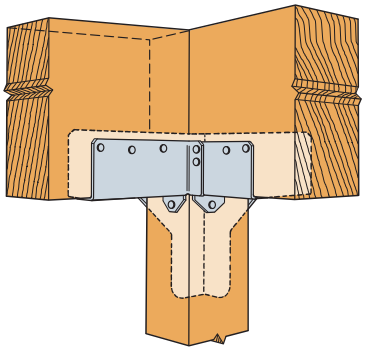

RTC44 Installation
(square cut)

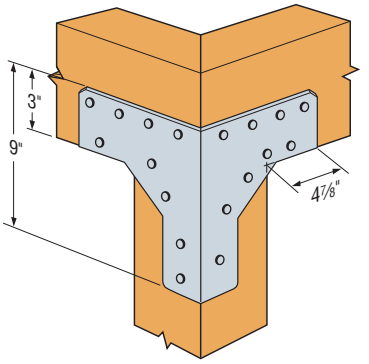

RTC44 Installation
(mitered corner)

C-C-2021 ©2021 SIMPSON STRONG-TIE COMPANY INC.

AC/LPCZ/LCE/RTC

Post Caps (cont.)

These products are available with additional corrosion protection. For more information, see p. 14.

SS For stainless-steel fasteners, see p. 21.

SD Many of these products are approved for installation with Strong-Drive® SD Connector screws. See pp. 348–352 for more information.

Model No.	Dimensions (in.)		Min. / Max.	Total No. Fasteners (in.)		Allowable Loads (DF/SP) (160)		Code Ref.
	W	L		Beam	Post	Uplift	Lateral	
AC4	3⁹⁄₁₆	6½	Min.	(8) 0.162 x 3½	(8) 0.162 x 3½	1,745	1,610	IBC, FL, LA
	3⁹⁄₁₆	6½	Max.	(14) 0.162 x 3½	(14) 0.162 x 3½	2,490	1,610	
AC4RZ	4	7	Min.	(8) 0.162 x 3½	(8) 0.162 x 3½	1,745	1,610	
	4	7	Max.	(14) 0.162 x 3½	(14) 0.162 x 3½	2,490	2,075	
LCE4	—	5⅜	—	(14) 0.162 x 3½	(10) 0.162 x 3½	1,950	1,350	
AC6	5½	8½	Min.	(8) 0.162 x 3½	(8) 0.162 x 3½	1,665	1,565	
	5½	8½	Max.	(14) 0.162 x 3½	(14) 0.162 x 3½	2,815	2,075	
AC6RZ	6	9	Min.	(8) 0.162 x 3½	(8) 0.162 x 3½	1,665	1,565	
	6	9	Max.	(14) 0.162 x 3½	(14) 0.162 x 3½	3,055	2,450	
LPC4Z	3⁹⁄₁₆	3½	—	(8) 0.148 x 3	(8) 0.148 x 3	755	760	
LPC6Z	5⁹⁄₁₆	5½	—	(8) 0.148 x 3	(8) 0.148 x 3	920	885	

1. Allowable loads have been increased for wind or earthquake loading with no further increase allowed. Reduce where other loads govern.
2. Connector table loads and fastener quantities are listed for two parts.
3. Lateral load is in the direction parallel to the beam.
4. For minimum nailing quantity and load values, fill all round holes; for maximum nailing quantity and load values, fill all round and triangular holes.
5. Uplift loads do not apply to spliced conditions. Spliced conditions must be detailed by the designer to transfer tension loads between spliced members by means other than the post cap.
6. Structural composite lumber columns have sides that show either the wide face or the edges of the lumber strands/veneers known as the narrow face. Values in the tables reflect installation into the wide face. See technical bulletin T-C-SCLCLM at **strongtie.com** for load reductions resulting from narrow-face installations.
7. **Fasteners:** Nail dimensions are listed diameter by length. See pp. 21–22 for fastener information.

Model No.	Dimensions (in.)		Total No. of Fasteners (in.)		DF/SP Uplift Loads (160)			SPF Uplift Loads (160)		
	W	L	Beam	Post	Side Beam	Main Beam	Post	Side Beam	Main Beam	Post
RTC44[1] (Mitered corner)	3⁹⁄₁₆	4¾	(16) 0.162 x 3½	(10) 0.162 x 3½	900	900	1,800	775	775	1,550
RTC44[2] (Square cut)	3⁹⁄₁₆	4¾	(16) 0.162 x 3½	(10) 0.162 x 3½	925	1,230	1,760	795	1,060	1,515
LCE4Z[1] (Mitered corner)	5⅜	5⅜	(14) 0.162 x 3½	(10) 0.162 x 3½	—	—	885	—	—	760

1. The allowable download for the mitered RTC44 and LCE4Z connection is limited to the bearing of the mitered beams on the post and shall be determined by the designer.
2. The allowable download for the main beam in the square-cut RTC44 connection is limited to the bearing of the beam on the post and shall be determined by the designer. The side beam allowable download is 1,170 lb.
3. The combined uplift loads applied to all the beams must not exceed the post allowable uplift load listed in the table.
4. Connectors must be installed in pairs to achieve listed loads.
5. **Fasteners:** Nail dimensions are listed diameter by length. See pp. 21–22 for fastener information.

C-C-2021 ©2021 SIMPSON STRONG-TIE COMPANY INC.

CBTZ

Concealed Beam Tie

CBTZ, is part of the concealed structural connector line that combines structural strength with invisibility. Designed to connect horizontal beams atop a vertical post, the CBTZ continues the structural load path into the foundation through the CPTZ. The simplistic cylindrical design allows installations with a common drill bit, eliminating challenging kerf cuts. The CBTZ is available in two models designed to connect beams and posts of a variety of sizes. It is part of a concealed connector system that includes the CPTZ and CJT.

Features:

- Flattened sides assist installer while using the CBTZ as a template
- Locator tabs provide proper dimensional layout
- Required dowel pins included
- Orientation markings distinguish which end installs into the post and which end goes into the beam

Material: 12 gauge

Finish: CBT — ZMAX® coating; the ½"-diameter drift dowels are mechanically galvanized in accordance with ASTM B695, Class 55

Installation:

- Use all specified fasteners; see General Notes
- ½" dowels included
- CBT2Z requires a minimum 6"-deep nominal beam
- For step-by-step installation instructions, see technical bulletin T-C-CBTZINS or view our video on **strongtie.com**

Codes: See p. 11 for Code Reference Key Chart

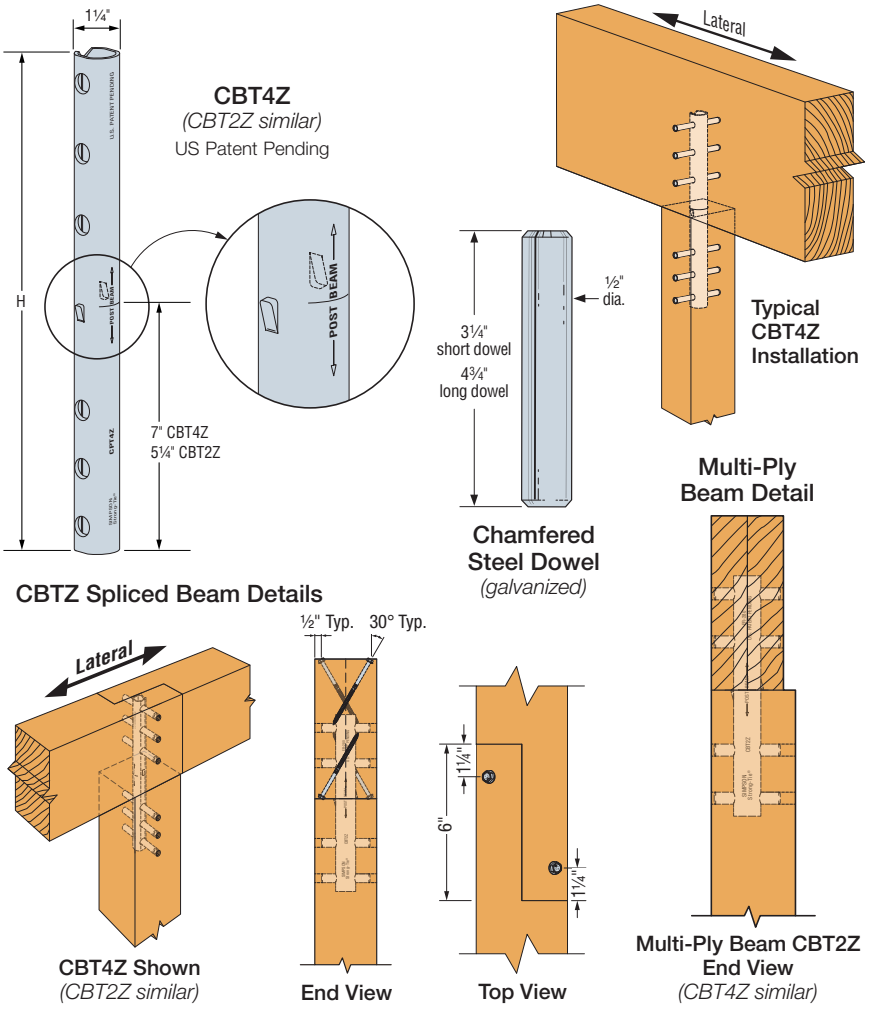

These products are available with additional corrosion protection. For more information, see p. 14.

Model No.	Post (Min.)	Beam Ply	Beam Size (Min.)	Dimensions (in.) D	Dimensions (in.) H	CBTZ Fasteners Qty. Post	CBTZ Fasteners Qty. Beam	CBTZ Fasteners Type	Splice Fasteners Quantity – Type	Allowable Loads (DF/SP) Continuous Beam Uplift (160)	Continuous Beam Lateral (160)	Continuous Beam Down	End of Beam Uplift (160)	End of Beam Lateral (160)	End of Beam Down	Spliced Beam Uplift (160)	Spliced Beam Lateral (160)	Spliced Beam Down	Code Ref.
Standard Installation																			
CBT2Z	4x4	—	4x6	1¼	10	2	2	½" x 3¼" dowel	—	2,020	750	6,890	1,585	550	6,890	—	—	—	IBC, FL, LA
								½" MB	—										
CBT4Z	6x6	—	6x8	1¼	14	3	3	½" x 4¾" dowel	—	4,215	1,655	18,140	3,695	1,055	18,140	—	—	—	
								½" MB	—										
Alternate Installation – Multi-ply Beam																			
CBT2Z	4x4	2	2x6	1¼	10	2	2	½" x 2¾" dowel	—	1,515	550	5,795	1,515	550	5,795	—	—	—	—
CBT4Z	6x6	3	2x8	1¼	14	3	3	½" x 3¼" dowel	—	2,240	1,055	14,700	2,240	1,055	14,700	—	—	—	
Alternate Installation – Spliced Beam																			
CBT2Z	4x4	—	4x6	1¼	10	2	2	½" x 3¼" dowel	(4) ¼" x 4½" SDS	—	—	—	—	—	—	1,880	750	6,890	—
CBT4Z	6x6	—	6x8	1¼	14	3	3	½" x 4¾" dowel	(4) ¼" x 6" SDS	—	—	—	—	—	—	4,215	1,655	18,140	

1. Uplift and lateral loads have been increased for wind or earthquake loading, with no further increase allowed; reduce where other loads govern.
2. Lateral load is in the direction parallel to the beam.
3. Alternative ½"-diameter hex- or square-head machine bolts may be used for loads listed.
4. Lag or carriage bolts are not permitted.
5. Structural composite lumber columns have sides that show either the wide face or the edges of the lumber strands/veneers. Values in the tables reflect dowel or bolt installation into the wide face.
6. See figure for placement of the additional SDS fasteners required for the splice connection.
7. Dowels included in CBTZ kits do not match required lengths for the multi-ply application. The sizes shown in the table above need to be ordered separately or trimmed in the field.
8. Built-up lumber (multiple members) must be fastened together to act as one to resist the applied load (excluding the connector fasteners). This must be determined by the designer.
9. Center CBTZ on built-up beam. Loads are applicable to beam installation flush to one side of post or beam centered on post.

C-C-2021 ©2021 SIMPSON STRONG-TIE COMPANY INC.

PCZ/EPCZ

Post Caps

PCZ/EPCZ post caps are designed with their post and beam flanges in-line so that one PCZ/EPCZ model can accommodate several post sizes. The PCZ/EPCZ uses 0.148" x 3" nails. An alternate choice of fastener is the #9 x 1½" Strong-Drive® SD Connector screw. ZMAX® finish is standard to meet exposure conditions in many environments. See additional corrosion information at **strongtie.com/info**.

Material: 16 gauge

Finish: ZMAX coating

Installation:

- Use all specified fasteners; see General Notes
- Do not install bolts into pilot holes

Options:

- For end conditions, specify EPCZ post caps
- For heavy-duty applications, see CCQ and CC Series
- For retrofit applications, see AC and LCE Series

Codes: See p. 11 for Code Reference Key Chart

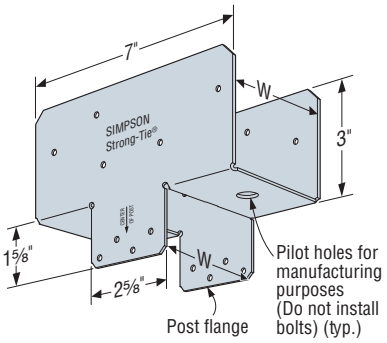

PCZ

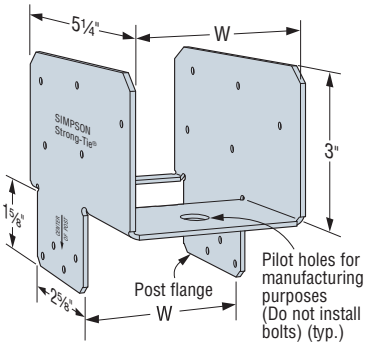

EPCZ

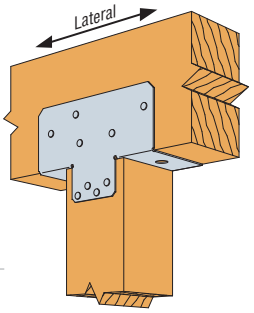

Typical PCZ Post Cap Installation

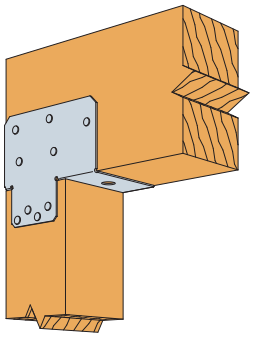

Typical EPCZ End Post Cap Installation

These products are available with additional corrosion protection. For more information, see p. 14.

SD Many of these products are approved for installation with Strong-Drive® SD Connector screws. See pp. 348–352 for more information.

Model No.	W (in.)	Fasteners (in.)		Post Size	Allowable Loads (DF/SP)				Code Ref.
					PCZ		EPCZ		
		Beam	Post		Uplift (160)	Lateral (160)	Uplift (160)	Lateral (160)	
PC4Z	3⁹⁄₁₆	(10) 0.148 x 3	(8) 0.148 x 3	(2) 2x4	1,480	1,120	1,130	895	IBC, FL, LA
				4x4	1,480	1,260	1,130	1,075	
				4x6	1,480	1,260	1,130	1,230	
				4x8	1,480	1,380	1,130	1,230	
PC6Z	5½	(10) 0.148 x 3	(8) 0.148 x 3	4x6	1,480	1,260	1,435	1,075	
				6x6	1,480	1,295	1,435	1,230	
				6x8	1,480	1,380	1,435	1,230	
PC8Z	7½	(10) 0.148 x 3	(8) 0.148 x 3	4x8	1,480	1,260	1,435	1,075	
				6x8	1,480	1,295	1,435	1,230	
				8x8	1,480	1,380	1,435	1,230	

1. Allowable loads have been increased for wind or earthquake loading with no further increase allowed. Reduce where other loads govern.
2. Uplift loads do not apply to spliced conditions. Spliced conditions must be detailed by the designer to transfer tension loads between spliced members by means other than the post cap.
3. Structural composite lumber columns have sides that show either the wide face or the edges of the lumber strands/veneers known as the narrow face. Values in the tables reflect installation into the wide face. See technical bulletin T-C-SCLCLM at **strongtie.com** for load reductions resulting from narrow-face installations.
4. Post and beam may consist of multiple members provided they are connected independently of the post cap fasteners.
5. 0.148" x 2½" nails may be used with no load reduction for uplift and 0.85 of the table loads for lateral.
6. #9 x 1½" Strong-Drive SD Connector screws may be substituted for table fasteners with no load reduction.
7. To order models available for rough size lumber, specify RZ suffix — e.g., PC4RZ.
8. **Fasteners:** Nail dimensions are listed diameter by length. See pp. 21–22 for fastener information.

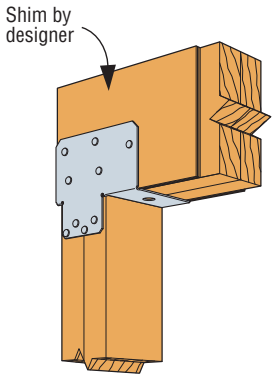

EPCZ Post Cap Installed on Double 2x Members

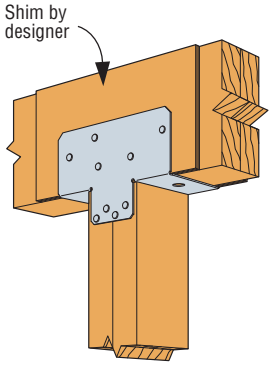

PCZ Post Cap Installed on Double 2x Members

C-C-2021 ©2021 SIMPSON STRONG-TIE COMPANY INC.

CCQ/ECCQ

Column Caps

This product is preferable to similar connectors because of (a) easier installation, (b) higher loads, (c) lower installed cost, or a combination of these features.

Column caps provide a strong connection for column-beam combinations. This design uses Strong-Drive® SDS Heavy-Duty Connector screws to provide faster installation and provides a greater net section area of the column compared to bolts. The SDS screws provide for a lower profile compared to standard through bolts.

Material: CCQ3, ECCQ3, CCQ4, CCQ4.62, ECCQ4, ECCQ4.62, CCQ6, ECCQ6 — 7 gauge; all others — 3 gauge

Finish: Simpson Strong-Tie gray paint; available in HDG and stainless steel; CCOQ and ECCOQ — no coating

Installation:

- Install ¼" x 2½" Strong-Drive SDS Heavy-Duty Connector screws, which are provided with the column cap. (Lag screws will not achieve the same load.) Install stainless-steel Strong-Drive screws with stainless-steel connectors.
- CCOQ and ECCOQ column caps only (no straps) may be ordered for field-welding to pipe or other columns. Dimensions are same as CCQ and ECCQ. Weld by designer.
- For rough-cut lumber sizes, provide dimensions. An optional W_2 dimension may be specified with any column size given. (Note that the W_2 dimension on straps rotated 90° is limited by the W_1 dimension.)

Options:

- For end conditions, specify ECCQ.
- Straps may be rotated 90° where $W_1 \geq W_2$ and for CCQ5-6.
- Other custom column caps are available. Contact Simpson Strong-Tie.

Codes: See p. 11 for Code Reference Key Chart

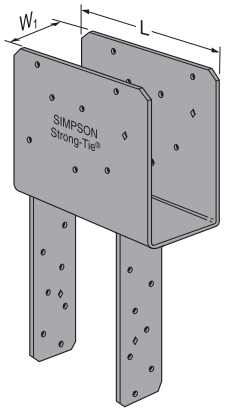

ECCQ46SDS2.5

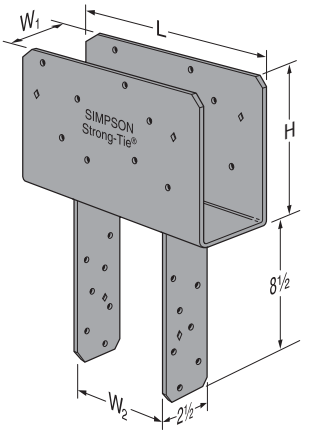

CCQ46SDS2.5

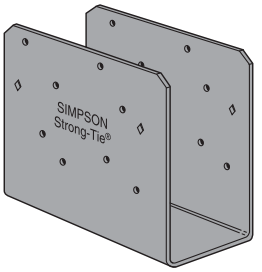

CCOQ4-SDS2.5
(no coating)

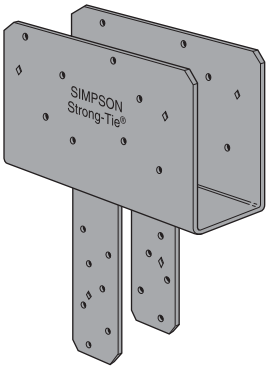

Optional CCQ with Straps Rotated 90°

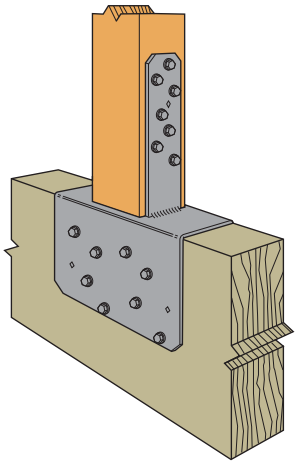

Inverted CCQ44SDS2.5 Post-to-Beam Installation

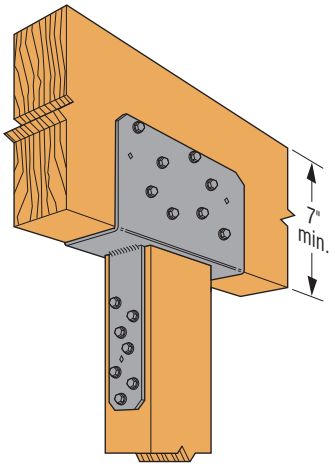

Typical CCQ46SDS2.5 Installation

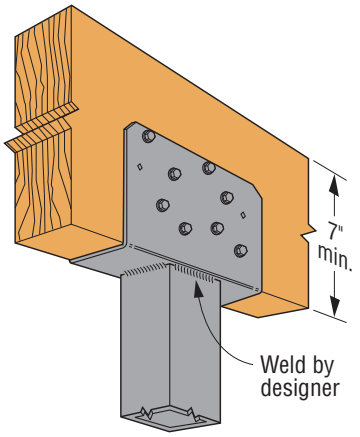

CCOQ Installation on Steel Column

Specify post-to-beam connections

C-C-2021 ©2021 SIMPSON STRONG-TIE COMPANY INC.

Column Caps (cont.)

These products are available with additional corrosion protection. For more information, see p. 14.

SS For stainless-steel fasteners, see p. 21.

	Model No.	Beam Width (in.)	Dimensions (in.)					No. of ¼" x 2½" SDS Screws			Allowable Loads (DF/SP)				Code Ref.	CCOQ/ECCOQ Model No. (No Legs)
											CCQ		ECCQ			
			W_1	W_2	L		H	Beam		Post	Uplift	Down	Uplift	Down		
					CCQ	ECCQ		CCQ	ECCQ		(160)	(100)	(160)	(100)		
SS	CCQ3-4SDS2.5	3⅛	3¼	3⅝	11	8½	7	16	14	14	5,370	16,980	3,465	6,125	IBC, FL, LA	CCOQ3-SDS2.5 ECCOQ3-SDS2.5
SS	CCQ3-6SDS2.5	3⅛	3¼	5½	11	8½	7	16	14	14	5,370	21,485	3,465	10,740		
SS	CCQ44SDS2.5	3½	3⅝	3⅝	11	8½	7	16	14	14	5,370	19,020	3,785	7,655		CCOQ4-SDS2.5 ECCOQ4-SDS2.5
SS	CCQ46SDS2.5	3½	3⅝	5½	11	8½	7	16	14	14	6,785	24,065	3,785	12,030		
SS	CCQ48SDS2.5	3½	3⅝	7½	11	8½	7	16	14	14	6,785	24,065	3,785	16,405		
	CCQ4.62-3.62SDS	4½	4⅝	3⅝	11	8½	7	16	14	14	5,370	23,390	3,785	9,845		CCOQ4.62-SDS2.5 ECCOQ4.62-SDS2.5
	CCQ4.62-4.62SDS	4½	4⅝	4⅝	11	8½	7	16	14	14	5,370	30,070	3,785	12,655		
	CCQ4.62-5.50SDS	4½	4⅝	5½	11	8½	7	16	14	14	6,785	30,940	3,785	15,470		
SS	CCQ5-4SDS2.5	5⅛	5¼	3⅝	11	8½	7	16	14	14	5,370	26,635	4,040	11,210		CCOQ5-SDS2.5 ECCOQ5-SDS2.5
SS	CCQ5-6SDS2.5	5⅛	5¼	5½	11	8½	7	16	14	14	6,785	28,190	5,355	17,615		
SS	CCQ5-8SDS2.5	5⅛	5¼	7½	11	8½	7	16	14	14	6,785	35,235	5,355	24,025		
SS	CCQ64SDS2.5	5¼, 5½	5½	3⅝	11	8½	7	16	14	14	5,370	28,585	3,785	12,030		CCOQ6-SDS2.5 ECCOQ6-SDS2.5
SS	CCQ66SDS2.5	5¼, 5½	5½	5½	11	8½	7	16	14	14	6,785	30,250	3,785	18,905		
SS	CCQ68SDS2.5	5¼, 5½	5½	7½	11	8½	7	16	14	14	6,785	37,815	3,785	25,780		
SS	CCQ6-7.13SDS2.5	5¼, 5½	5½	7⅛	11	8½	7	16	14	14	6,785	37,815	3,785	24,490		
SS	CCQ74SDS2.5	6¾	6⅞	3⅝	11	8½	7	16	14	14	5,370	33,490	4,040	15,355		CCOQ7-SDS2.5 ECCOQ7-SDS2.5
SS	CCQ76SDS2.5	6¾	6⅞	5½	11	8½	7	16	14	14	6,785	37,125	5,355	24,130		
	CCQ77SDS2.5	6¾	6⅞	6⅞	11	8½	7	16	14	14	6,785	48,265	5,355	29,615		
	CCQ78SDS2.5	6¾	6⅞	7½	11	8½	7	16	14	14	6,785	48,265	5,355	32,905		
SS	CCQ7.1-4SDS2.5	7	7⅛	3⅝	11	8½	7	16	14	14	5,370	34,730	4,040	18,375		CCOQ7.12-SDS2.5 ECCOQ7.12-SDS2.5
SS	CCQ7.1-6SDS2.5	7	7⅛	5½	11	8½	7	16	14	14	6,785	38,500	5,355	28,875		
	CCQ7.1-7.1SDS2.5	7	7⅛	7⅛	11	8½	7	16	14	14	6,785	57,750	5,355	36,750		
	CCQ7.1-8SDS2.5	7	7⅛	7½	11	8½	7	16	14	14	6,785	52,500	5,355	39,375		
	CCQ84SDS2.5	7½	7½	3⅝	11	8½	7	16	14	14	6,785	37,210	5,355	16,405		CCOQ8-SDS2.5 ECCOQ8-SDS2.5
	CCQ86SDS2.5	7½	7½	5½	11	8½	7	16	14	14	6,785	41,250	5,355	25,780		
	CCQ88SDS2.5	7½	7½	7½	11	8½	7	16	14	14	6,785	51,565	5,355	35,155		
	CCQ94SDS2.5	8¾	8⅞	3⅝	11	8½	7	16	14	14	6,785	47,545	5,355	19,905		CCOQ9-SDS2.5 ECCOQ9-SDS2.5
	CCQ96SDS2.5	8¾	8⅞	5½	11	8½	7	16	14	14	6,785	48,125	5,355	31,280		
	CCQ98SDS2.5	8¾	8⅞	7½	11	8½	7	16	14	14	6,785	62,565	5,355	42,655		
	CCQ106SDS2.5	9¼	9½	5½	11	8½	7	16	14	14	6,785	52,250	5,355	32,655		CCOQ10-SDS2.5 ECCOQ10-SDS2.5

1. Uplift loads have been increased for earthquake or wind loading with no further increase allowed. Reduce where other loads govern.
2. Downloads shall be reduced where limited by capacity of the post.
3. Uplift loads do not apply to spliced conditions. Spliced conditions must be detailed by the designer to transfer tension loads between spliced members by means other than the post cap.
4. Spliced conditions must be detailed by the designer to transfer tension loads between spliced members by means other than the column cap.
5. Column sides are assumed to be aligned in the same vertical plane as the beam sides. CCQ4.62 models assume a minimum 3½"-wide post.
6. Structural composite lumber columns have sides that show either the wide face or the edges of the lumber strands/veneers known as the narrow face. Values in the tables reflect installation into the wide face. See technical bulletin T-C-SCLCLM at **strongtie.com** for load reductions resulting from narrow-face installations.
7. Beam depth must be a minimum of 7".
8. For 5¼" engineered lumber, use 5½" models.
9. CCOQ and ECCOQ welded to a steel column will achieve maximum load listed for the beam and the post cap as CCQ and ECCQ. The steel column width shall match the beam width. Weld by designer.

C-C-2021 ©2021 SIMPSON STRONG-TIE COMPANY INC.

CC/ECC/ECCU

Column Caps

Column caps provide a strong connection for column-beam combinations.

Material: CC3¼, CC44, CC46, CC48, CC4.62, CC64, CC66, CC68, CC6-7⅛, ECC3¼, ECC44, ECC46, ECC48, ECC4.62, ECC64, ECC66, ECC68, ECC6-7⅛ — 7 gauge; all others — 3 gauge

Finish: Simpson Strong-Tie gray paint. Some products available in HDG, stainless steel or black powder coat; CCO, ECCO — no coating.

Installation:

- Use all specified fasteners; see General Notes
- Bolt holes shall be a minimum of 1/32" to a maximum of 1/16" larger than the bolt diameter (per 2015 NDS, section 12.1.3.2)
- Contact engineered wood manufacturers for connections that are not through the wide face

Options:

- Straps may be rotated 90° where $W_1 \geq W_2$ (see illustration) and for CC5¼-6.
- For special, custom or rough-cut lumber sizes, provide dimensions. An optional W_2 dimension may be specified. (The W_2 dimension on straps rotated 90° is limited by the W_1 dimension.)
- CCO/ECCO — Column cap only (no straps) may be ordered for field-welding to pipe or other columns. CCO/ECCO dimensions are the same as CC/ECC. Weld by designer.
- CCOB — Any two CCOs may be specified for back-to-back welding to create a cross beam connector. Use the table loads; the load is no greater than the lesser element employed.

Codes: See p. 11 for Code Reference Key Chart

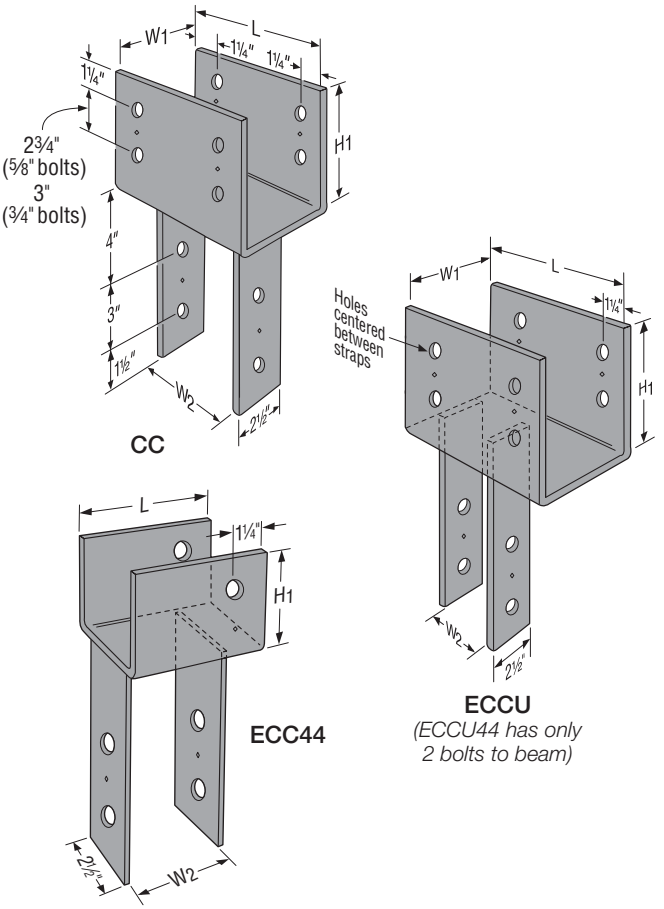

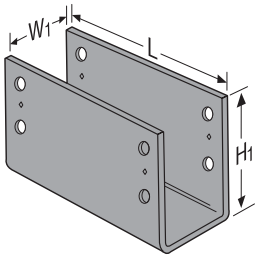

CCO

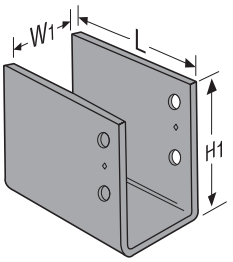

ECCO

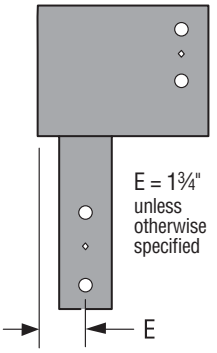

Optional ECC with Straps Rotated 90°

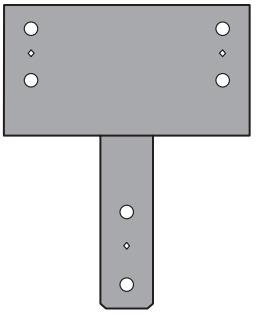

Optional CC with Straps Rotated 90°

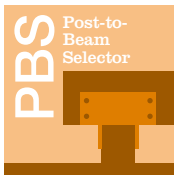

Specify post-to-beam connections

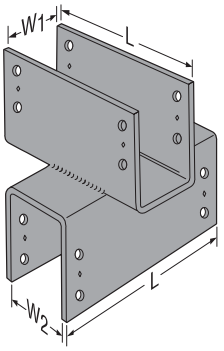

CCOB

C-C-2021 ©2021 SIMPSON STRONG-TIE COMPANY INC.

SIMPSON Strong-Tie

Column Caps (cont.)

These products are available with additional corrosion protection. For more information, see p. 14.

SS For stainless-steel fasteners, see p. 21.

	Model No.	Beam Width (in.)	Dimensions (in.)						Bolts					Allowable Loads (DF/SP)					Code Ref.	CCO/ECCO Model No. (No Legs)
			W_1	W_2	L			H_1	Size	Beam			Post	CC		ECC	ECCU			
					CC	ECC	ECCU			CC	ECC	ECCU		Uplift (160)	Down (100)	Down (100)	Uplift (160)	Down (100)		
SS	CC3 1/4-4	3⅛	3¼	3⅝	11	7½	9½	6½	⅝	4	2	4	2	3,150	16,980	6,835	3,150	6,835	IBC, FL, LA	CCO3 1/4 ECCO3 1/4
	CC3 1/4-6	3⅛	3¼	5½	11	7½	9½	6½	⅝	4	2	4	2	3,150	21,485	10,740	3,150	10,740		
SS	CC44	3½	3⅝	3⅝	7	5½	6½	4	⅝	2	1	2	2	1,850	19,020	7,655	1,850	7,655		CCO4 ECCO4
	CC46	3½	3⅝	5½	11	8½	9½	6½	⅝	4	2	4	2	3,530	24,065	12,030	3,530	12,030		CCO4/6 ECCO4/6
	CC48	3½	3⅝	7½	11	8½	9½	6½	⅝	4	2	4	2	3,530	24,065	16,405	3,530	16,405		
	CC4.62-3.62	4½	4⅝	3⅝	11	8½	9½	6½	⅝	4	2	4	2	4,535	23,390	9,845	4,535	9,845		CCO4.62 ECCO4.62
	CC4.62-4.62	4½	4⅝	4⅝	11	8½	9½	6½	⅝	4	2	4	2	4,535	30,070	12,655	4,535	12,655		
	CC4.62-5.50	4½	4⅝	5½	11	8½	9½	6½	⅝	4	2	4	2	4,535	30,940	15,470	4,535	15,470		
	CC5 1/4-4	5⅛	5¼	3⅝	13	9½	10½	8	¾	4	2	4	2	6,300	26,635	11,210	6,300	11,210		CCO5 1/4 ECCO5 1/4
	CC5 1/4-6	5⅛	5¼	5½	13	9½	10½	8	¾	4	2	4	2	6,500	28,190	17,615	6,500	17,615		
	CC5 1/4-8	5⅛	5¼	7½	13	9½	10½	8	¾	4	2	4	2	6,645	35,235	24,025	6,645	24,025		
	CC64	5¼, 5½	5½	3⅝	11	7½	9½	6½	⅝	4	2	4	2	5,545	28,585	12,030	5,545	12,030		CCO6 ECCO6
SS	CC66	5¼, 5½	5½	5½	11	7½	9½	6½	⅝	4	2	4	2	5,545	30,250	18,905	5,545	18,905		
	CC68	5¼, 5½	5½	7½	11	9½	9½	6½	⅝	4	2	4	2	5,545	37,815	25,780	5,545	25,780		ECCO68
	CC6-7 1/8	5¼, 5½	5½	7⅛	11	9½	9½	6½	⅝	4	2	4	2	5,545	37,815	24,490	5,545	24,490		
	CC74	6¾	6⅞	3⅝	13	10½	10½	8	¾	4	2	4	2	6,330	33,490	15,355	6,330	15,355		CCO7 ECCO7
	CC76	6¾	6⅞	5½	13	10½	10½	8	¾	4	2	4	2	6,790	37,125	24,130	6,790	24,130		
	CC77	6¾	6⅞	6⅞	13	10½	10½	8	¾	4	2	4	2	7,020	48,265	29,615	7,020	29,615		
	CC78	6¾	6⅞	7½	13	10½	10½	8	¾	4	2	4	2	7,145	48,265	32,090	7,145	32,905		
	CC7 1/8-4	7	7⅛	3⅝	13	10½	10½	8	¾	4	2	4	2	6,360	34,730	18,375	6,360	18,375		CCO7 1/8 ECCO7 1/8
	CC7 1/8-6	7	7⅛	5½	13	10½	10½	8	¾	4	2	4	2	6,825	38,500	28,875	6,825	28,875		
	CC7 1/8-7 1/8	7	7⅛	7⅛	13	10½	10½	8	¾	4	2	4	2	7,105	57,750	36,750	7,105	36,750		
	CC7 1/8-8	7	7⅛	7½	13	10½	10½	8	¾	4	2	4	2	7,190	52,500	39,375	7,190	39,375		
	CC84	7½	7½	3⅝	13	10½	10½	8	¾	4	2	4	2	6,410	37,210	16,405	6,410	16,405		CCO8 ECCO8
	CC86	7½	7½	5½	13	10½	10½	8	¾	4	2	4	2	6,885	41,250	25,780	6,885	25,780		
	CC88	7½	7½	7½	13	10½	10½	8	¾	4	2	4	2	7,250	51,565	35,155	7,250	35,155		
	CC94	8¾	8⅞	3⅝	13	10½	10½	8	¾	4	4	4	2	6,580	47,545	19,905	6,580	19,905		CCO9 ECCO9
	CC96	8¾	8⅞	5½	13	10½	10½	8	¾	4	4	4	2	7,080	48,125	31,280	7,080	31,280		
	CC98	8¾	8⅞	7½	13	10½	10½	8	¾	4	4	4	2	7,455	62,565	42,655	7,455	42,655		
	CC106	9¼	9½	5½	13	10½	10½	8	¾	4	4	4	2	7,160	52,250	32,655	7,160	32,655		CCO10 ECCO10

1. Uplift loads have been increased for earthquake or wind loading with no further increase allowed. Reduce where other loads govern.
2. Downloads shall be reduced where limited by allowable loads of the post.
3. CC uplift loads do not apply to splice conditions.
4. Splice conditions with CCs must be detailed by the designer to transfer tension loads between spliced members by means other than the column cap.
5. Column sides are assumed to be aligned in the same vertical plane as the beam sides. CC4.62 models assume a minimum 3½"-wide post.
6. Structural composite lumber columns have sides that show either the wide face or the edges of the lumber strands/veneers known as the narrow face. Values in the tables reflect installation into the wide face. See technical bulletin T-C-SCLCLM at **strongtie.com** for load reductions resulting from narrow-face installations.
7. Beam depth must be at least as tall as H_1.
8. CCO and ECCO welded to a steel column will achieve maximum load listed for the beam and the post cap as CC and ECC. The steel column width shall match the beam width. Weld by designer.
9. All references to bolts are for structural quality through bolts (not lag screws or carriage bolts) equal to or better than ASTM A307, Grade A.

C-C-2021 ©2021 SIMPSON STRONG-TIE COMPANY INC.

ECCLQ/CCCQ/CCTQ

SIMPSON Strong-Tie

Column Caps

The ECCLQ, CCCQ and CCTQ column caps provide strong, multiple beam-to-column connector options. The design uses Strong-Drive® SDS Heavy-Duty Connector screws to provide faster installation and a lower profile compared to standard through bolts. Screws are configured to provide high uplift design values.

Material: CCCQ3, ECCLQ3, CCTQ3, CCCQ4, ECCLQ4, CCTQ4, CCCQ4.62, ECCLQ4.62, CCTQ4.62, CCCQ6, ECCLQ6, CCTQ6 — 7 gauge; all others — 3 gauge

Finish: Simpson Strong-Tie gray paint; also available in HDG

Installation:

- Install ¼" x 2½" Strong-Drive SDS Heavy-Duty Connector screws, which are provided, in all round holes. (Lag screws will not achieve the same load.)
- No additional welding is allowed.

Options:

- Many combinations of beam and post sizes can be manufactured (refer to worksheet T-C-CCQLTC-WS at **strongtie.com**).
- Available in widths up to 8" wide.
- ECCLQ is available in left or right side beam orientations. Specify ECCLLQ or ECCLRQ.
- Straps may be rotated where $W_1 \geq W_2$.
- Column caps may be ordered without the column straps for field welding to a steel column, full loads apply for the beam and the post cap. Specify "No Straps" when ordering. Weld by designer. These models have no coating.

Ordering:

- The L dimension varies depending on the width of the side stirrup (W_3 or W_4). Contact Simpson Strong-Tie for exact dimensions.
- Main beam stirrup height (H_1) is 7". Side beam stirrups (H_2 or H_3) can vary in height with the minimum height of 7". Specify the side stirrup height from the top of the cap.
- Example Order: 4x main beam, 6x post, 4x side beam (oriented to the left) with both beams flush on bottom is ordered as an ECCLLQ464SDS.

Codes: See p. 11 for Code Reference Key Chart

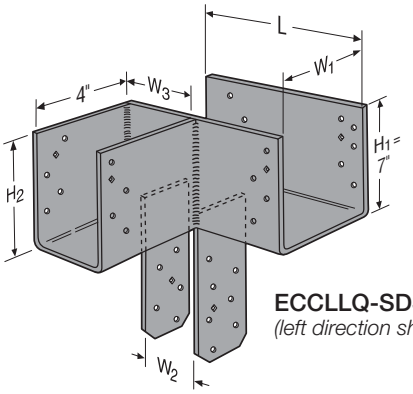

ECCLLQ-SDS2.5
(left direction shown)

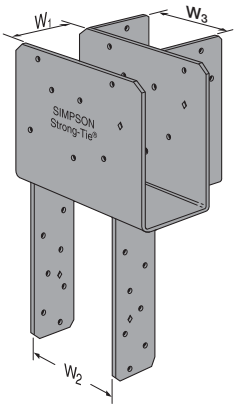

ECCLRQ-SDS2.5
(right direction shown)

Specify post-to-beam connections

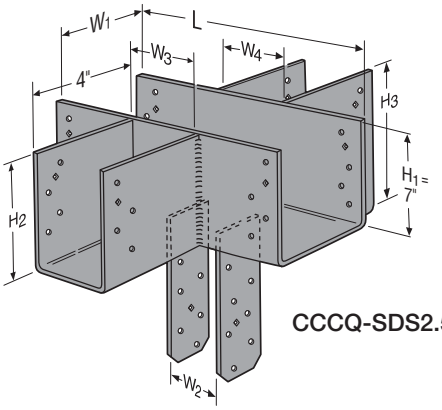

CCCQ-SDS2.5

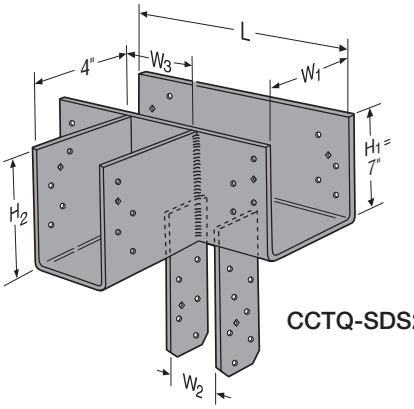

CCTQ-SDS2.5

Series	Allowable Loads (DF/SP)					Code Ref.
	Uplift (160)			Download (100)		
	Main Beam	Side Beam	Total	Side Beam	Total	
ECCLQ-SDS	2,835	1,840	3,795	6,780	Refer to note #5	—
CCCQ-SDS	4,780	2,390	4,780	7,000		
CCTQ-SDS	4,910	2,350	5,315	7,000		

1. Uplift loads have been increased for earthquake or wind loading with no further increase allowed. Reduce where other loads govern.
2. Allowable load is per seat. Side beams must be loaded symmetrically for the CCCQ.
3. The combined uplift loads applied to all beams in the connector must not exceed the total allowable uplift load listed in the table.
4. The ECCLQ side beam may use a side beam uplift load up to 2,350 lb. The deflection of this load may exceed the standard ⅛" deflection by an additional ⅛".
5. The combined download for all the carried beams shall not exceed the allowable download for the unmodified product on p. 89 (CCQ load for CCCQ and CCTQ, or ECCQ load for ECCLQ). The download for each side beam shall not exceed the allowable load shown.
6. Column width in the direction of the beam width must be the same as the main beam width (W_1).

C-C-2021 ©2021 SIMPSON STRONG-TIE COMPANY INC.

ECCL/CCC/CCT

Column Caps

Column-to-beam connections often have multiple beams framing on top of a column. L, T, and cross-column caps provide design solutions for this application.

Material: 7 gauge or 3 gauge depending on size

Finish: Simpson Strong-Tie gray paint, also available in HDG

Installation:

- Use all specified fasteners; see General Notes
- Bolt holes shall be a minimum of 1⁄32" to a maximum of 1⁄16" larger than bolt diameter (per 2015 and 2018 NDS 12.1.3.2)

Options:

- Many combinations of beam and post sizes can be manufactured. Refer to worksheet T-C-CCLTC-WS at **strongtie.com**.
- The download shall be determined from the allowable loads for the unmodified product (see p. 91). The side beam can take a maximum of 40% of the download and shall not exceed 10,665 lb. The sum of the loads for the side beam(s) and main beam can not exceed the table load.
- Uplift loads do not apply for ECCL caps. For CCC and CCT, uplift loads from table apply for main beam only.
- The column width in the direction of the main beam width must be the same as the main beam width (W_1).
- Specify the stirrup height from the top of the cap. The minimum side stirrup heights (H_2 or H_3) is 6½" (3½" for 44s).
- The L dimension may vary depending on the width of the side stirrup (W_3 or W_4).
- See p. 91 for other dimensions.
- Column caps may be ordered without the column straps for field welding to a steel column. Specify "No Straps" when ordering. Weld by designer. Full loads apply for the beam and the post cap.

Ordering Examples:

- A CCC66 with W_3 = 5½", H_2 and H_3 = 6½" is a CC66 column cap with 5½" beams on each side with all beam seats flush.
- An ECCLR66 with W_3 = 3⅝", H_2 = 7½" is an ECC66 end column cap with a 4x beam on the right side (specify direction left or right for stirrup) and stirrup seat 1" below the cap seat.

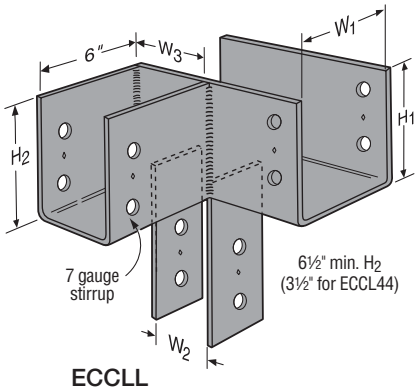

ECCLL
(left direction shown)
Order ECCLR for right direction.

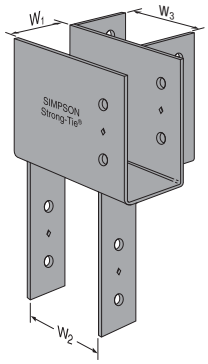

ECCLR
(right direction shown)

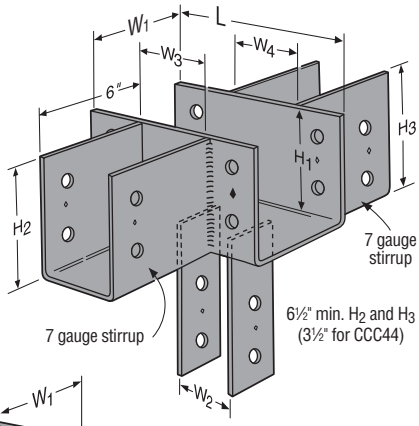

CCC

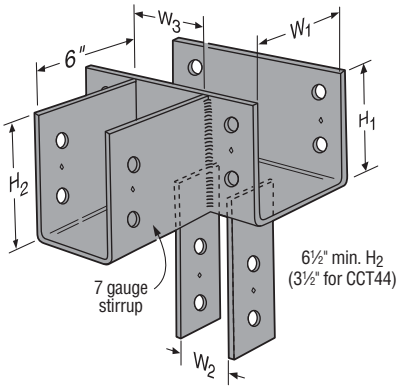

CCT

Specify post-to-beam connections

There are cost-effective alternatives for replacing column caps by using a combination of connectors. Designer must specify the options required. For column cap clearance, allow 3" for the hanger flange depth.

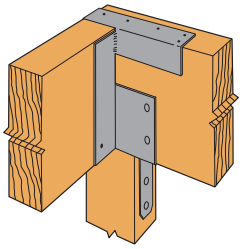

ECC and HWP
(top flange offset right)

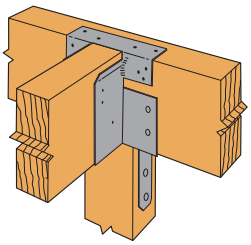

CC and HWP

Ordering Multiple-Beam Column Caps

Ordering column caps incorporates several key steps that are important to ensure the highest allowable-load solution for your project.
For more information, refer to worksheet T-C-CCLTC-WS for bolted connections and worksheet T-C-CCQLTC-WS for Quick Install connections.
See p. 2 of these worksheets for model numbers for common post and beam width combinations.
These worksheets are available at **strongtie.com**.

C-C-2021 ©2021 SIMPSON STRONG-TIE COMPANY INC.

Hanger Index

Hanger Options Matrix 98–99

Solid Sawn Joist Hangers

- Face Mount 100–121
- Sloped and Skewed 115–120
- Top Flange 124–136
- Specialty 120, 138–139

Fire Wall Hangers 235–239

I-Joist, Glulam and Structural Composite Lumber Connectors

- Face Mount 140–158
- Adjustable 153
- Sloped and Skewed 154–158
- Top Flange 161–184

Mass Timber 188–191

Plated Truss Connectors 192–234

Masonry and Concrete Connectors 240–265

Hanger Load Table Explanation

SD This icon identifies products approved for installation with Simpson Strong-Tie Strong-Drive® SD Connector screw. See pp. 348–352 for more information.

Min./Max.: Refers to min. or max. nailing for products with round and triangle holes. Min. nailing uses round holes, and max. nailing uses round and triangle holes to achieve maximum load.

Load Duration: Assumed duration factor used to determine the allowable load.

Installed Cost Index: This indicates the products relative installed cost (combined cost and installation cost).

Joist Size: This shows the size of joist member.

Model No.: This is the Simpson Strong-Tie product name.

Gauge: Product material thickness.

Nails: This shows the fastener quantity and type required to achieve the table loads.

Allowable Design Loads: The maximum load that a connection is designed to provide.

Uplift

Floor, Snow, Roof, Download

Joist Size	Model No.	Ga.	Dimensions (in.) W	H	B	Min./ Max.	Fasteners (in.) Header	Joist	DF/SP Allowable Loads Uplift (160)	Floor (100)	Snow (115)	Roof (125)	Installed Cost Index (ICI)	Code Ref.
Sawn Lumber Sizes														
DBL 2X6	LUS26-2	18	3⅛	4⅞	2	—	(4) 0.162 x 3½	(4) 0.162 x 3½	1,060	1,030	1,170	1,265	Lowest	IBC, FL, LA
	U26-2	16	3⅛	5	2	—	(8) 0.162 x 3½	(4) 0.148 x 1½	535	1,150	1,305	1,410	+65%	
	HUS26-2	14	3⅛	5 3/16	2	—	(4) 0.162 x 3½	(4) 0.162 x 3½	1,165	1,055	1,195	1,290	+172%	
	HU26-2/HUC26-2	14	3⅛	5⅜	2½	Min.	(8) 0.162 x 3½	(4) 0.148 x 1½	755	1,190	1,345	1,440	+233%	
		14	3⅛	5⅜	2½	Max.	(12) 0.162 x 3½	(6) 0.148 x 1½	1,135	1,785	2,015	2,165	+254%	

This icon identifies products that are available with additional corrosion protection. See p. 14 for additional information.

Dimensions W, H, B: This shows the product dimensions (width, height and bearing length in this case.) referenced in the product drawing.

Fasteners: Nail dimensions are listed diameter by length. See pp. 21–22 for other nail sizes and information.

Throughout this catalog, the table fastener size indicates the required nail diameter and length. See pp. 21–22 for load adjustment factors for alternative fasteners used with some connectors.

All installations should be designed only in accordance with the allowable load values set forth in this catalog.

Code Ref.: See p. 11 for the Code Reference Key Chart, to determine which code reports include this product.

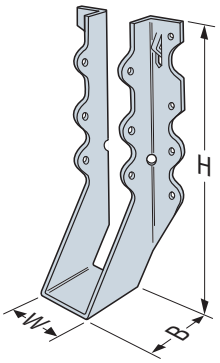

Product Drawing: Provides a graphic presentation of the product with dimensional information (often cross referenced to the table).

C-C-2021 ©2021 SIMPSON STRONG-TIE COMPANY INC.

Hanger Installation Notes

Illustrations shown on pp. 95–96 apply to solid sawn lumber as well as I-joist and structural composite lumber.

Top-Flange Hangers

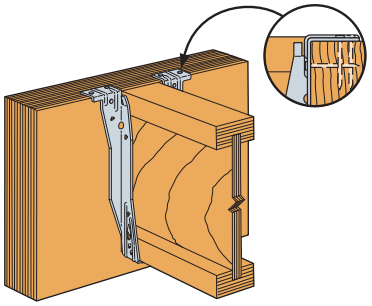

Flush Framing
Top flange configuration and thickness of top flange need to be considered for flush frame conditions.

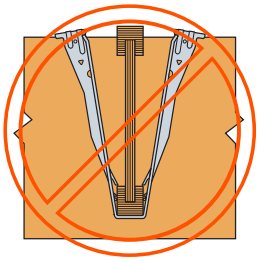

Hanger Over-Spread
If the hanger is over-spread, it can raise the I-joist above the header and may cause uneven surfaces and squeaky floors. The ITS and IUS with up to ¼" overspread (both sides combined) will not result in reduced download. It will reduce allowable uplift load.

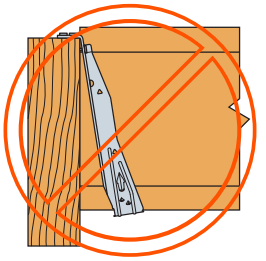

Hanger Not Plumb
A hanger "kicked-out" from the header can cause uneven surfaces and squeaky floors.

Prevent Rotation

Hangers provide some joist rotation resistance; however, additional lateral restraint may be required for deep joists.

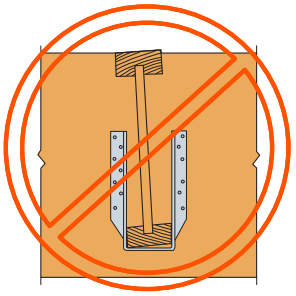

No Rotation Resistance
Lack of web stiffeners combined with short hanger allows unwanted rotation.

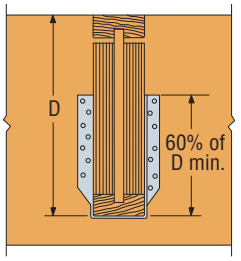

Rotation Prevented by Web Stiffeners or Solid Joist and Hanger Height
Hanger height should be at least 60% of the joist height.

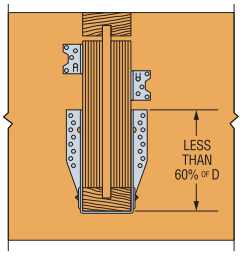

Rotation Prevented by Web Stiffeners or Solid Joist and Clips or Blocking
If hanger height is less than 60% of the joist height, add clips or blocking near the top.

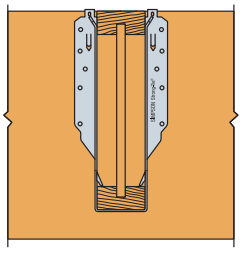

Rotation Prevented by Lateral Flange Support
Sides of hanger laterally support the top flange of the I-joist. No web stiffeners required.

Wood Nailers

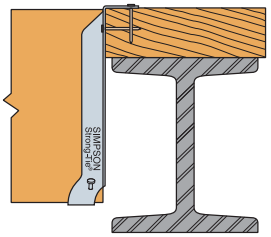

Correct Attachment

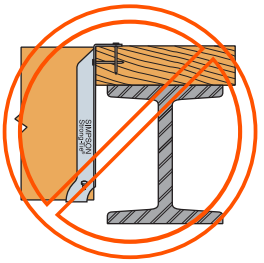

Nailer Too Wide
The loading may cause cross-grain bending. As a general rule, the maximum allowable overhang is ¼", depending on nailer thickness.

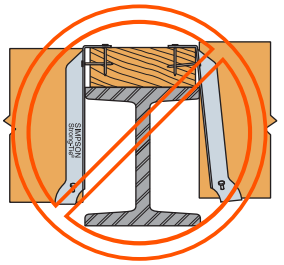

Nailer Too Narrow
Nailer should be full width.

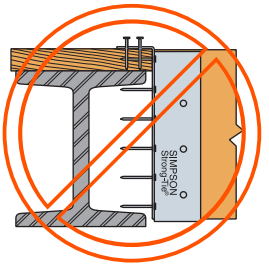

Nailer Too Thin
Or the wrong hanger for the application.

C-C-2021 ©2021 SIMPSON STRONG-TIE COMPANY INC.

Hanger Installation Notes

Toe-Nailing

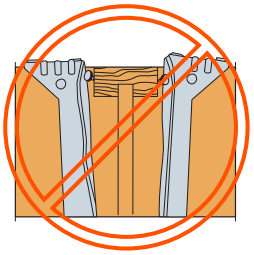

Toe nailing causes squeaks and improper hanger installations. Do not toe nail I-joists before installing top-flange or face-mount hangers.

Positive Angle Nailing

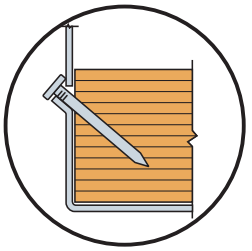

Correct Nailing Approx. 45° Angle

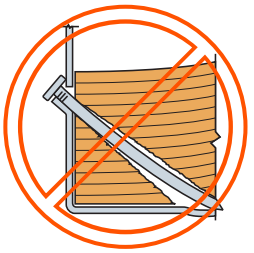

Nail Too Long

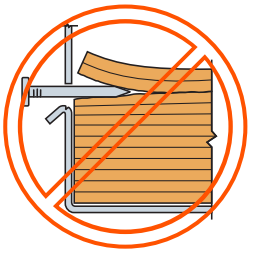

Nail at Wrong Angle

Other Applications

Sloped Joists
For sloped joists up to ¼:12 there is no reduction. For slopes greater than ¼:12 see individual product pages or refer to technical bulletin T-C-SLOPEJST at **strongtie.com**.

Multiple Joists
Multiple joists should be adequately connected together to act as one unit.

Fasteners
Use the correct nails. Wood may split if the nails are too large. Hanger nails into flanges should not exceed 0.148" x 1½". Nails into web stiffeners should not exceed 0.162" diameter.

Eccentrically Loaded I-Joists
Supporting a top flange hanger may require bottom flange restraining straps, blocking or directly-applied ceiling systems to prevent rotation at the hanger location.

Skewed Joists
Joists may be skewed up to 2½° in a non-skewed hanger without any load reduction. Refer to individual hanger descriptions for information allowing any further skew applications.

Notching Joists
Notching of joists/rafters to accommodate sloped conditions in standard (non-sloped) hangers is not recommended and can lead to premature splitting.

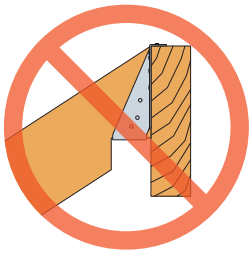

Do Not Notch Joist

I-Joist as a Header Installation
When face-mount hangers are attached to I-joist headers, backer blocks must be installed to provide a nailing surface for the hanger nails. The backer blocks should be installed on both sides of the web and attached together with a minimum of (10) 0.148" x 3" nails. The hanger nails should extend through the web. Contact the I-Joist manufacturer for additional design considerations.

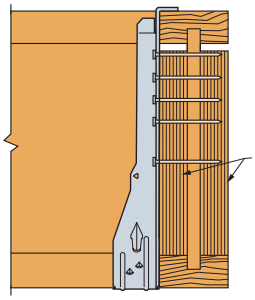

Face-Mount Hanger

When top-flange hangers are attached to I-joist headers, a backer block must be installed to prevent the top flange from rotating under load. The backer blocks should be installed with a minimum of (10) 0.148" x 3" nails clinched. Check with the joist manufacturer for additional design considerations.

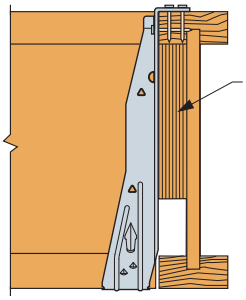

Top-Flange Hanger

C-C-2021 ©2021 SIMPSON STRONG-TIE COMPANY INC.

Hanger Options General Notes

Hanger Options

The Hanger Options Matrix for Face Mount and Top Flange Hangers in each of the respective hanger sections shows hanger modifications and special applications (uplift, nailers and weldability) that are available for each model series. Modifications may not be available for all models in the series, and some combinations of hanger options are not available. Many hanger modifications result in load reductions. For all modifications, refer to the listed hanger option pages for additional information regarding the availability of each modification, associated load reductions, and installation requirements. For joists sloped up to ¼:12, there is no load reduction. For slopes greater than ¼:12, see individual product pages or refer to technical bulletin T-C-SLOPEJST at **strongtie.com**. For more information regarding the applications, refer to the individual product pages throughout the catalog.

For attaching to headers made up of multiple plies, refer to T-C-MPLYHEADR at **strongtie.com**.

Hanger Option General Notes

This information applies only to the hangers manufactured by Simpson Strong-Tie and installed per our instructions. Some combinations of these options on a single hanger have not been evaluated. In some cases, combinations of these options cannot be manufactured. A qualified designer must always evaluate each connection, including header and joist limitations, before specifying the product.

Testing is performed using a standardized hanger test method. The joist in the test setup may include the minimum amount of structural stability where appropriate. For example, the sloped down hanger tests are assembled with a joist cut on the lower end to lie flush with a wood member attached with three 8d common toenails. Header and other attached structural members are assumed fixed in actual installations. Horizontal loads induced by sloped joists must be resisted by other members in the structural system.

Material: Gauge may vary from that specified depending on the manufacturing process used. U, HU, HUTF, WP and BA hangers normally have single-piece stirrups; occasionally, the seat may be welded. Hanger configurations, height and fastener schedules may vary from the tables depending on the joist size, skew and slope.

Finish: See specific hanger tables. Welded specials: Simpson Strong-Tie gray paint. Specials that are not galvanized before fabrication can be hot-dip galvanized after fabrication; specify HDG.

Codes: Modified hangers, due to their numerous variations, are not on code reports.

Loads: For multiple modifications on the same connector, use the single multiplier factor that yields the lowest design loads.

To Order: Use the abbreviations below to order specials. The example shows a HWP3.56X hanger and illustrates most available options; most special hangers have only a few of these features. For assistance, contact Simpson Strong-Tie.

Installation:

- Fastener quantities may be increased beyond the amount specified in the standard hanger table.
- Fill all holes with the table-specified fastener types.
- Some skewed hangers require bevel cut joists; refer to the specific notes provided for each product.

HWP3.56 — **Base Model**

X — **X = Modification**

H_1 = Specify — **Height**

SLD30 — **Seat Sloped Down (30°)** ***(SLU = Seat Up)***

SKL20 — **Skewed Left (20°)** ***(SKR = Skewed Right)***

TFDL20 — **Top Flange Down Left (20°)** ***(TFDR = Top Flange Down Right)***

TFO20 — **Top Flange Open (20°)** ***(TFC = Top Flange Closed)***

OSR — **Offset Top Flange Right** ***(OSL = Offset Top Flange Left)***

The Joist Hanger Selector software enables you to select the optimal product for your project. The software takes into consideration all the characteristics seen in this catalog. Visit **strongtie.com/jhs**.

Height for Sloped Hangers

Height 1 (H_1) is the joist height before the slope cut has been made.

Net Height (Net H) is the joist height after the slope cut has been made.

Provide **H_1** when ordering a connector. Connectors are made assuming dry lumber is being used in continuously dry conditions.

Simpson Strong-Tie will calculate the **Net H** dimension based on the mathematical formula of H_1/cos angle.

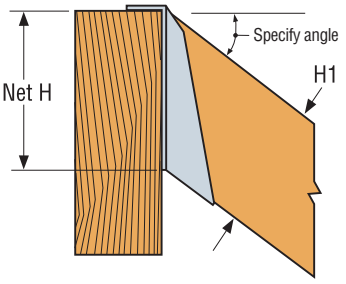

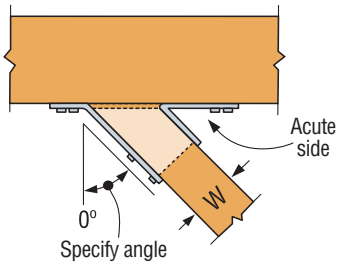

C-C-2021 ©2021 SIMPSON STRONG-TIE COMPANY INC.

Face-Mount Hanger Option Matrix

Base Model Series	Hanger Modification Options: Skewed Seat: Allowable Skew (Skewable)	Skewed Seat: Square Cut Joist Allowed (Butt Cut)	Sloped Seat (Slopeable)	Skewed and Sloped Seat (Slopeable and Skewable)	Concealed Flange(s) (Concealed)	Alternate Widths	Alternate Heights	Applications: Uplift Weldability (Uplift, Weldable)	Hanger Option Page(s)
DHU	≤ 45°	●			○			U	238
HGU	≤ 45°	See Note 4			○	●	●	U	144
HGUM	≤ 45°	See Note 4			●	●	●	U	246–248
HGUS	≤ 45°	○						U	102
HHGU					●	●	●	U	144
HHUS	≤ 45°		≤ 45°	●				U	102, 141
HSUL / HSUR	45° Std.	●			○			U	120, 154
HSULC / HSURC	45° Std.	●			Std.			U	—
HTU	≤ 67½°	●						U	—
HU	≤ 67½° ○	●	≤ 45°	●	○	○	○	U, W	100–101, 142–143
HUC	See Note 3	●	≤ 45°		Std.	○	○	U, W	100–101, 142–143
HUCQ					Std.			U, W	—
HUS								U	—
IUS								U	—
LGU	≤ 45°	●			○	●	●	U	144
LGUM	≤ 45°	See Note 4						U	246–248
LSSJ / LSSR	Field skewable and slopeable to 45°							U	—
LTHJA								U	—
LTHMA								U	—
LU								U	—
LUC					Std.			U	—
LUS								U	—
MGU	≤ 45°	See Note 4			○	●	●	U	144
MIU								U	—
MUS								U	—
SUL / SUR	45° Std.	●						U	120, 154
SULC / SURC	45° Std.	●			Std.			U	—
THGB / THGBH	≤ 45°	See Note 4				○		U	218
THGBV / THGBHV	≤ 45°	See Note 4						U	218
THGQH	45°	●						U	215
THJA								U	—
THJU						○		U	210
U	≤ 67½°	●	≤ 45°	●		○	○	U	100–101, 142–143

1. Refer to the specific product pages for uplift, nailer, and weld information.
2. Refer to the listed pages for each model series for restrictions, required load reductions, and additional information regarding the hanger modifications.
3. HUC less than 3¼" wide cannot be skewed 45°. See pp. 101 and 143 for allowable skews for narrower widths.
4. Square cut allowed for beams up to 5½" and four-ply trusses.
5. For sloped and skewed combinations on top-flange hangers, specify whether the beam will be high side, low side, or center flush with carrying member.

● = Available for all models ○ = Available for some models **Std.** = Available with standard model (no modification required)

C-C-2021 ©2021 SIMPSON STRONG-TIE COMPANY INC.

Top-Flange Hanger Option Matrix

Base Model Series	Hanger Modification Options: Skewed Seat: Allowable Skew	Skewed Seat: Square Cut Joist Allowed	Sloped Seat	Skewed and Sloped Seat	Concealed Flange(s)	Alternate Widths	Alternate Heights	Sloped Top Flange	Open Top Flange	Closed Top Flange	Offset Top Flange	Saddle Hanger	Ridge Hanger	Applications: Uplift Nailers Weldability	Hanger Option Page(s)
BA	●		●	●		●	●	●	●	●				U, N, W	124–126, 164–166
DGF / DGBF						○	○							U, N, W	—
DGHF	≤ 45°					○					●			U, N, W	235–237
DHUTF	≤ 45°	●			◉	●	●							U	238–239
EG	≤ 45°		≤ 45°			●	●							—	173
EGQ	≤ 45°		≤ 45°			○	●							U	172
GH	≤ 45°						●					●		—	242
GLS	≤ 50°		≤ 45°	●		○	●	●			●	●		U, W	171–172
HB	≤ 45°		≤ 45°	●		●	●	●	●	●		●		U, N, W	124–126, 164–166
HGLS	≤ 50°		≤ 45°			○	●	●			●	●		U, W	170–171
HGLT	≤ 50°		≤ 45°			●	●	●			●			U, W	170–171
HGLTV	≤ 50°		≤ 45°			○	●	●			●			U, W	170–171
HIT														U, N	—
HUCTF / HUCITF			≤ 45°		Std.	●	○							U	130
HUSTF														U	—
HUTF / HUITF	≤ 45° ◉	●	≤ 45° ◉	◉	◉	○	○							U	130
HWP / HWPH	≤ 45°		≤ 45°	◉		○	●	●	●		●			U, N, W	127–129
ITS														U, N	161–163
JB / JBA														U, N	124–126
LB / LBAZ														U, N, W	124–126
LEG	≤ 45°	●	≤ 45°			○	●				●			—	173
MBHA	45°	●												—	249
MEG	≤ 45°	●	≤ 45°			○	●				◉			—	173
MIT														U, N	—
MSC	20°–45° ◉	●	≤ 45°	●		◉	●							—	174
PF														U	—
THA					◉									U, N	—
THAC					Std.									U, N	—
THAI														N	—
THAR/L	45° Std.	●												U, N	—
THASR/L	22°–75° Field Skewable	●												U	—
WMU	≤ 45°		≤ 45°			○					●			—	240–241
WP	≤ 84°	◉	≤ 45°	●		○	●	●	●	●	●	●	◉	N, W	127–129, 167–169

See footnotes on p. 98.

● = Available for all models ◉ = Available for some models **Std.** = Available with standard model (no modification required)

C-C-2021 ©2021 SIMPSON STRONG-TIE COMPANY INC.

LUC/LU/U/HU/HUC

Standard Face-Mount Joist Hangers

LUC — Concealed-flange hanger available for 2x6, 2x8, 2x10 and 2x12 lumber. Ideal for end of ledger/header or post conditions, the LUCZ also provides cleaner lines for exposed conditions such as overhead decks.

LU — Value engineered for strength and economy. Precision-formed — engineered for installation ease and design value.

U — The standard U hanger provides flexibility of joist to header installation. Versatile fastener selection with tested allowable loads.

HU/HUC — Most models have triangle and round holes. To achieve maximum loads, fill both round and triangle holes with common nails. These heavy-duty connectors are designed for additional strength, longevity and safety factors.

Material: See tables on pp. 104–114

Finish: Galvanized. Some products available in ZMAX® coating or stainless steel.

Installation:

- Use all specified fasteners; see General Notes.
- HU/HUC — Can be installed filling round holes only, or filling round and triangle holes for maximum values.
- Joists sloped up to ¼:12 achieve table loads.
- For installations to masonry or concrete see pp. 243–245.
- HU/HUC hangers can be welded to a steel member. Allowable loads are the lesser of the values in the hanger tables on pp. 104–114 or the weld capacity — refer to technical bulletin T-C-HUHUC-W at **strongtie.com**.
- When nailing into solid sawn carrying member's end grain, the allowable load is adjusted by a factor of 0.67.

Allowable Loads:

- See table on pp. 104–114 for loads.

Options:

- For both flanges concealed, order HUC.
- When the HUC is skewed, the header flange opposite the skew direction is not concealed. See p. 101.
- For low-cost, code approved 45° skewed hangers, see SUR/SUL.
- For field-adjustable hangers, see LSSJ, LRUZ and LSSR on pp. 117–119.
- See modifications table for available options and associated load capacities for U and HU hangers.
- For ease of ordering, refer to technical bulletin T-C-U-HU-WS at **strongtie.com**.
- LU/LUC cannot be modified.

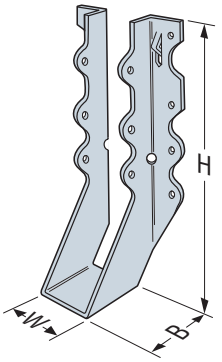

LU28
(except LU roughs)

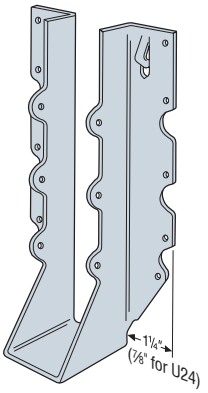

U210

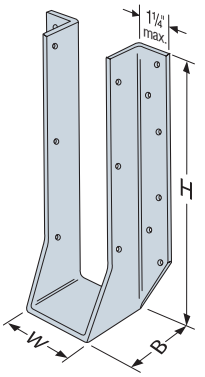

HU214
Projection seat on most models for maximum bearing and section economy.

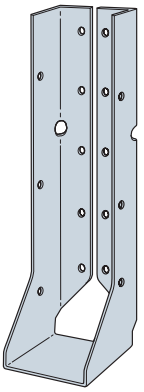

LUC210Z
(LUC26Z similar)

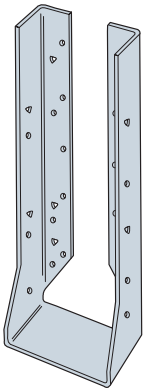

HUC412
Concealed flanges

Model configurations may differ from those shown. Some HU models do not have triangle holes. Contact Simpson Strong-Tie.

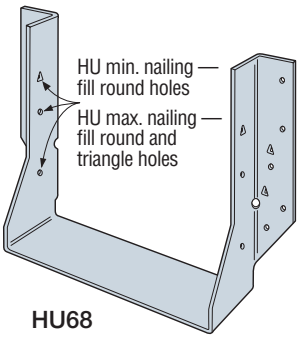

HU68

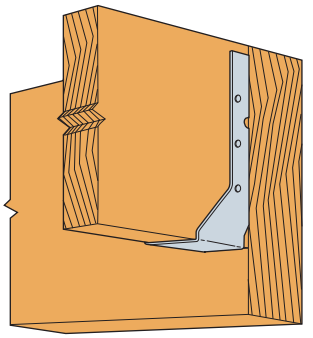

Typical LUCZ Installation

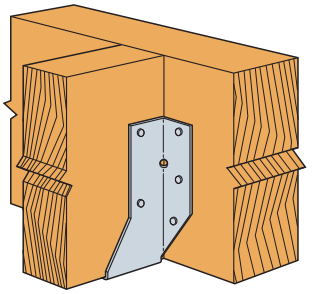

Typical HU Installation

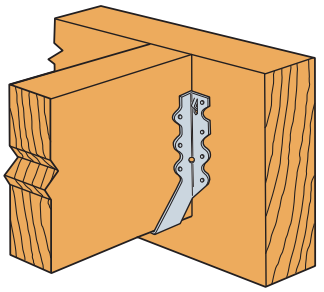

Typical LU28 Installation

C-C-2021 ©2021 SIMPSON STRONG-TIE COMPANY INC.

Standard Face-Mount Joist Hangers (cont.)

U/HU/HUC Series Modifications and Associated Load Reduction Factors

Seat			Flange	Fastener Substitutions	
Seat Sloped Up or Down 45° Max.	Seat Skewed 67½° Max.[3] for W ≤ 6 45° Max. for W > 6	Seat Sloped and Skewed	One or Both HU Flanges Concealed[2]	For Stainless-Steel Hangers Stainless-Steel Nails 0.162" x 3½"	Other Smooth-Shank Fastener Substitutions
1.00	W ≤ 3⁹⁄₁₆ use 1.00 W > 3⁹⁄₁₆ use 0.80	0.80	1.00 (normal) 0.80 (when sloped and skewed)	Ring shank (all conditions) 1.00 Smooth shank (normal seat) 1.00 Smooth shank (modified seat)[1] 0.50	0.162" x 3½" → 0.162" x 2½" 1.00 0.162" x 3½" → 0.148" x 3" 0.84 0.162" x 3½" → 0.148 x 1½" 0.64

1. Modified seat is sloped, skewed, or both. For stainless-steel hangers, if sloped only or skewed only, use a smooth-shank stainless-steel reduction of 0.65.
2. For hanger applications with both flanges concealed, W must be at least 2⁵⁄₁₆". To order, ask for HUCXXX.
   For skewed HUC, only flange on acute side is concealed.
3. Skews over 50° require a square-cut joist.

Reduction Factor Instructions

Allowable Download = Seat x Flange x Stainless Steel Nails x Other Fastener Substitutions x Table Load

Allowable Uplift = 0.75 x Face Fastener Type x Table Load for skewed or sloped
1.00 x Face Fastener Type x Table Load for non-skewed or non-sloped

Maximum Skew Angle for Skewed HUC Hangers

Hanger Width (in.)	Maximum Skew (degree)
2⁵⁄₁₆	31
2⅜	31
2⁹⁄₁₆	34
2¾	37
3⅛	41
3¼	42
> 3¼	45

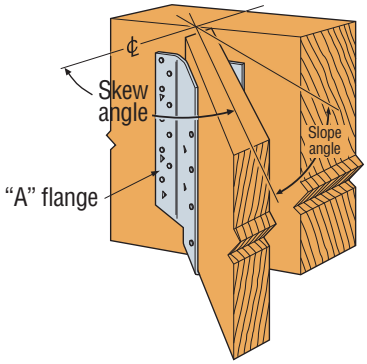

Typical HU Sloped Down, Skewed Right Installation

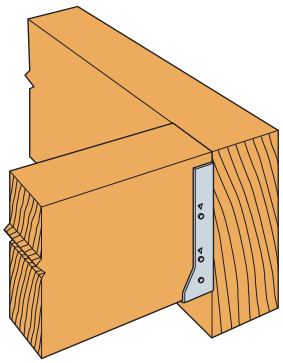

Typical HUC Installed on a Beam

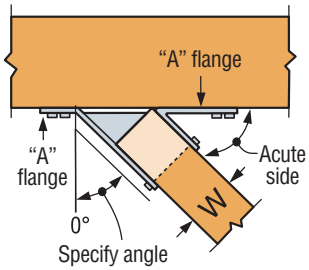

Top View U Hanger Skewed Right < 51°
(square cut)

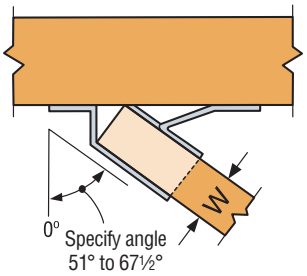

Top View U Hanger Skewed Right ≥ 51°
(square cut)

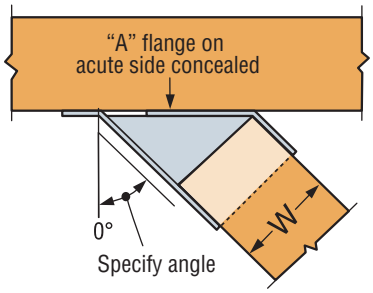

Top View HUC Concealed Hanger Skewed Right
(square cut)

C-C-2021 ©2021 SIMPSON STRONG-TIE COMPANY INC.

LUS/HUS/HHUS/HGUS

Double-Shear Face-Mount Joist Hangers

This product is preferable to similar connectors because of (a) easier installation, (b) higher loads, (c) lower installed cost, or a combination of these features.

All hangers in this series have double-shear nailing. This innovation distributes the load through two points on each joist nail for greater strength. It also allows the use of fewer nails, faster installation and the use of standard nails for all connections. (Do not bend or remove tabs.)

Material: See tables, pp. 104–114

Finish: Galvanized. Some products available in stainless steel or ZMAX® coating; see Corrosion Information, pp. 12–15.

Installation:

- Use all specified fasteners; see General Notes.
- Nails must be driven at an angle through the joist or truss into the header to achieve the table loads.
- Not designed for welded or nailer applications.
- With 3x carrying members: when 0.162" x 3½" nails are specified, use 0.162" x 2½" nails into the header and 0.162" x 3½" nails into the joist with no load reduction. When 0.148" x 3" nails are specified, use 0.148" x 2½" nails into the header and 0.148" x 3" nails into the joist with no load reduction.
- With 2x carrying members: when 0.162" x 3½" nails are specified, use 0.148" x 1½" nails into the header and 0.148" x 3" nails into the joist and reduce the load to 0.64 of the table values. When 0.148" x 3" nails are specified, use 0.148" x 1½" nails into the header and 0.148" x 3" nails into the joist and reduce the load to 0.77 of the table values. See p. 22 for specific Load Adjustment Factors.

Allowable Loads:

- See table on pp. 104–114 for loads.

Options:

- LUS/HUS hangers cannot be modified.
- See next page for HHUS/HGUS modifications.

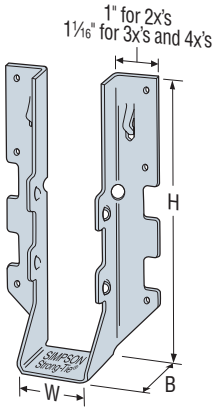

LUS28

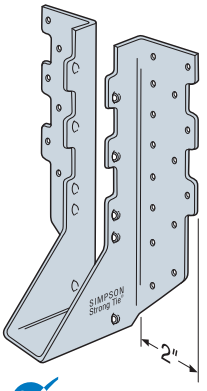

HUS210
(HUS26 and HUS28 similar)

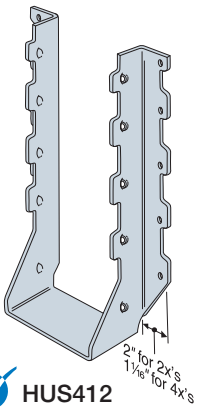

HUS412

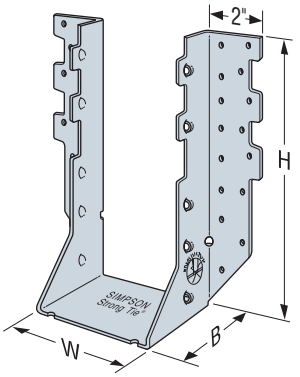

HHUS410

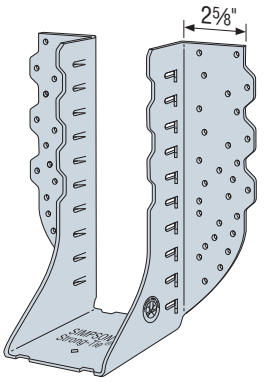

HGUS3.25/12

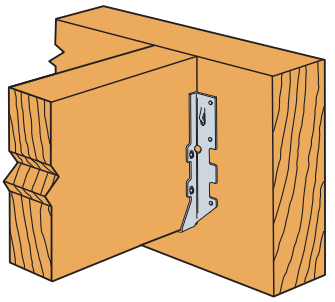

Typical LUS28 Installation
use 0.148" x 3" nail or
0.148" x 3¼" nail

Double-Shear Nailing

Double-Shear Nailing Top View

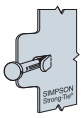

Double-Shear Nailing Side View — Do not bend tab

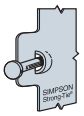

Dome Double-Shear Nailing Side View *(Available on some models)*

C-C-2021 ©2021 SIMPSON STRONG-TIE COMPANY INC.

LUS/HUS/HHUS/HGUS

Double-Shear Face-Mount Joist Hangers (cont.)

HHUS/HGUS

HHUS — Sloped and/or Skewed Seat

- HHUS hangers can be skewed to a maximum of 45° and/or sloped to a maximum of 45°
- For skew only, maximum allowable download is 0.85 of the table load
- For sloped only or sloped and skewed hangers, the maximum allowable download is 0.65 of the table load
- Uplift loads for sloped/skewed conditions are 0.72 of the table load, not to exceed 2,475 lb.
- The joist must be bevel-cut to allow for double-shear nailing

HGUS — Skewed Seat

- HGUS hangers can be skewed only to a maximum of 45°. Allowable loads are:

HGUS Seat Width	Joist	Download	Uplift
W < 2"	Square cut	0.62 of table load	0.46 of table load
W < 2"	Bevel cut	0.72 of table load	0.46 of table load
2" < W < 6"	Bevel cut	0.85 of table load	0.41 of table load
2" < W < 6"	Square cut	0.46 of table load	0.41 of table load
W > 6"	Bevel cut	0.85 of table load	0.41 of table load

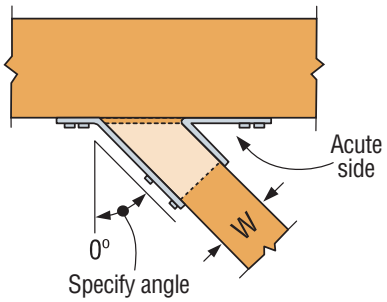

Top View HHUS Hanger Skewed Right
(joist must be bevel cut)
All joist nails installed on the outside angle *(non-acute side)*.

HUCQ

Heavy-Duty Face-Mount Joist Hanger

The HUCQ series are heavy-duty joist hangers that incorporate Strong-Drive® SDS Heavy-Duty Connector screws. Designed and tested for installation at the end of a beam or on a post, they provide a strong connection with fewer fasteners than nailed hangers. See pp. 145–152 for structural composite lumber hangers.

Features:

- Fire-resistant F (flame) and T (temperature) rated in Intertek Design No. SST/WPCF 120-01.

Intertek

Material: 14 gauge

Finish: Galvanized. Most models available in stainless steel or ZMAX® coating.

Installation:

- Use all specified fasteners; see General Notes.
- Install ¼" x 2½" Strong-Drive SDS Heavy-Duty Connector screws, which are provided, in all round holes. (Lag screws will not achieve the same load.)
- HUCQ hangers can be welded to a steel member. Allowable loads are the lesser of the values in the hanger tables on pp. 104–114 or the weld capacity — refer to technical bulletin T-C-HUHUC-W at **strongtie.com**.

Allowable Loads:

- See table on pp. 104–114 for loads.

Options:

- These hangers cannot be modified.

Codes: See p. 11 for Code Reference Key Chart

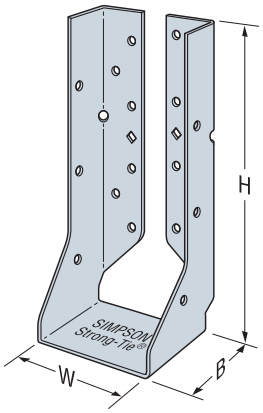

HUCQ410-SDS

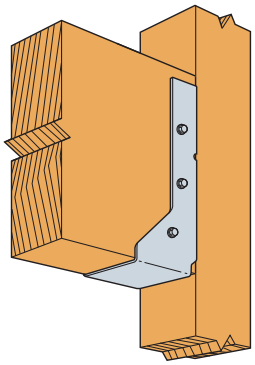

Typical HUCQ Installation on a Post

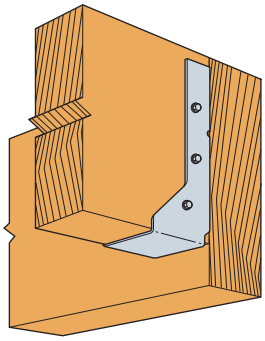

Typical HUCQ Installation on a Beam

C-C-2021 ©2021 SIMPSON STRONG-TIE COMPANY INC.

Face-Mount Hangers — Solid Sawn Lumber (DF/SP)

SIMPSON Strong-Tie®

The Joist Hanger Selector software enables you the most optimum product for your project.
The software takes into consideration all the characteristics seen in this catalog. Visit **strongtie.com/jhs**.

These products are available with additional corrosion protection. For more information, see p. 14.

SS For stainless-steel fasteners, see p. 21.

SD Many of these products are approved for installation with Strong-Drive® SD Connector screws. See pp. 348–352 for more information.

Joist Size	Model No.	Ga.	Dimensions (in.) W	Dimensions (in.) H	Dimensions (in.) B	Min./Max.	Fasteners (in.) Header	Fasteners (in.) Joist	DF/SP Allowable Loads (lb.) Uplift (160)	Floor (100)	Snow (115)	Roof (125)	Installed Cost Index (ICI)	Code Ref.
Sawn Lumber Sizes														
2X4	LU24	20	1 9/16	3 1/8	1 1/2	—	(4) 0.162 x 3 1/2	(2) 0.148 x 1 1/2	240	555	630	655	Lowest	IBC, FL, LA
	LUS24	18	1 9/16	3 1/8	1 3/4	—	(4) 0.148 x 3	(2) 0.148 x 3	435	670	765	820	3%	
	U24	16	1 9/16	3 1/8	1 1/2	—	(4) 0.162 x 3 1/2	(2) 0.148 x 1 1/2	240	575	650	705	67%	
	HU26	14	1 9/16	3 1/16	2 1/4	—	(4) 0.162 x 3 1/2	(2) 0.148 x 1 1/2	305	595	670	720	295%	
DBL 2X4	LUS24-2	18	3 1/8	3 1/8	2	—	(4) 0.162 x 3 1/2	(2) 0.162 x 3 1/2	410	800	905	980	Lowest	
	U24-2	16	3 1/8	3	2	—	(4) 0.162 x 3 1/2	(2) 0.148 x 3	240	575	650	705	33%	
	HU24-2 / HUC24-2	14	3 1/8	3 1/16	2 1/2	—	(4) 0.162 x 3 1/2	(2) 0.148 x 3	380	595	670	720	240%	
2x6	LUS26	18	1 9/16	4 3/4	1 3/4	—	(4) 0.148 x 3	(4) 0.148 x 3	1,165	865	990	1,060	Lowest	
	LU26	20	1 9/16	4 3/4	1 1/2	—	(6) 0.162 x 3 1/2	(4) 0.148 x 1 1/2	540	835	950	1,030	6%	
	U26	16	1 9/16	4 3/4	2	—	(6) 0.162 x 3 1/2	(4) 0.148 x 1 1/2	535	865	980	1,055	43%	
	LUC26Z	18	1 9/16	4 3/4	1 3/4	—	(6) 0.162 x 3 1/2	(4) 0.148 x 1 1/2	730	845	965	1,040	160%	
	HU26	14	1 9/16	3 1/16	2 1/4	—	(4) 0.162 x 3 1/2	(2) 0.148 x 1 1/2	305	595	670	720	179%	
	HUS26	16	1 5/8	5 3/8	3	—	(14) 0.162 x 3 1/2	(6) 0.162 x 3 1/2	1,320	2,735	3,095	3,230	276%	
DBL 2X6	LUS26-2	18	3 1/8	4 7/8	2	—	(4) 0.162 x 3 1/2	(4) 0.162 x 3 1/2	1,060	1,030	1,170	1,265	Lowest	
	U26-2	16	3 1/8	5	2	—	(8) 0.162 x 3 1/2	(4) 0.148 x 3	535	1,150	1,305	1,410	65%	
	HUS26-2	14	3 1/8	5 3/16	2	—	(4) 0.162 x 3 1/2	(4) 0.162 x 3 1/2	1,165	1,055	1,195	1,290	172%	
	HU26-2 / HUC26-2	14	3 1/8	4 15/16	2 1/2	Min.	(8) 0.162 x 3 1/2	(4) 0.148 x 3	755	1,190	1,345	1,440	233%	
		14	3 1/8	4 15/16	2 1/2	Max.	(12) 0.162 x 3 1/2	(6) 0.148 x 3	1,135	1,785	2,015	2,165	254%	
TPL 2x6	LUS26-3	18	4 5/8	4 1/8	2		(4) 0.162 x 3 1/2	(4) 0.162 x 3 1/2	1,060	1,030	1,170	1,265	*	
	U26-3	16	4 5/8	4 1/4	2		(8) 0.162 x 3 1/2	(4) 0.148 x 3	535	1,150	1,305	1,410	*	
	HU26-3 / HUC26-3	14	4 11/16	4 5/8	2 1/2	Min.	(8) 0.162 x 3 1/2	(4) 0.148 x 3	755	1,190	1,345	1,440	*	
		14	4 11/16	4 5/8	2 1/2	Max.	(12) 0.162 x 3 1/2	(6) 0.148 x 3	1,135	1,785	2,015	2,165	*	
2x8	LUS26	18	1 9/16	4 3/4	1 3/4	—	(4) 0.148 x 3	(4) 0.148 x 3	1,165	865	990	1,060	Lowest	
	LU26	20	1 9/16	4 3/4	1 1/2	—	(6) 0.162 x 3 1/2	(4) 0.148 x 1 1/2	540	835	950	1,030	6%	
	LUS28	18	1 9/16	6 5/8	1 3/4	—	(6) 0.148 x 3	(4) 0.148 x 3	1,165	1,100	1,260	1,350	23%	
	LU28	20	1 9/16	6 3/8	1 1/2	—	(8) 0.162 x 3 1/2	(6) 0.148 x 1 1/2	850	1,110	1,180	1,180	39%	
	U26	16	1 9/16	4 3/4	2	—	(6) 0.162 x 3 1/2	(4) 0.148 x 1 1/2	535	865	980	1,055	43%	
	LUC26Z	18	1 9/16	4 3/4	1 3/4	—	(6) 0.162 x 3 1/2	(4) 0.148 x 1 1/2	730	845	965	1,040	160%	
	HU28	14	1 9/16	5 1/4	2 1/4	—	(6) 0.162 x 3 1/2	(4) 0.148 x 1 1/2	605	895	1,010	1,080	251%	
	HUS26	16	1 5/8	5 3/8	3	—	(14) 0.162 x 3 1/2	(6) 0.162 x 3 1/2	1,320	2,735	3,095	3,230	276%	
	HUS28	16	1 5/8	7	3	—	(22) 0.162 x 3 1/2	(8) 0.162 x 3 1/2	1,760	4,095	4,095	4,095	409%	
DBL 2x8	LUS26-2	18	3 1/8	4 7/8	2	—	(4) 0.162 x 3 1/2	(4) 0.162 x 3 1/2	1,060	1,030	1,170	1,265	Lowest	
	LUS28-2	18	3 1/8	7	2	—	(6) 0.162 x 3 1/2	(4) 0.162 x 3 1/2	1,060	1,315	1,490	1,610	8%	
	U26-2	16	3 1/8	5	2	—	(8) 0.162 x 3 1/2	(4) 0.148 x 3	535	1,150	1,305	1,410	65%	
	HUS28-2	14	3 1/8	7 3/16	2	—	(6) 0.162 x 3 1/2	(6) 0.162 x 3 1/2	1,320	1,580	1,790	1,930	188%	
	HU28-2 / HUC28-2	14	3 1/8	6 5/16	2 1/2	Min.	(10) 0.162 x 3 1/2	(4) 0.148 x 3	755	1,490	1,680	1,800	397%	
		14	3 1/8	6 5/16	2 1/2	Max.	(14) 0.162 x 3 1/2	(6) 0.148 x 3	1,135	2,085	2,350	2,530	418%	
TPL 2X8	LUS28-3	18	4 5/8	6 1/4	2	—	(6) 0.162 x 3 1/2	(4) 0.162 x 3 1/2	1,060	1,315	1,490	1,610	*	
	U26-3	16	4 5/8	4 1/4	2	—	(8) 0.162 x 3 1/2	(4) 0.148 x 3	535	1,150	1,305	1,410	*	
	HU26-3 / HUC26-3	14	4 11/16	4 5/8	2 1/2	Min.	(8) 0.162 x 3 1/2	(4) 0.148 x 3	755	1,190	1,345	1,440	*	
		14	4 11/16	4 5/8	2 1/2	Max.	(12) 0.162 x 3 1/2	(6) 0.148 x 3	1,135	1,785	2,015	2,165	*	
QUAD 2X8	HU28-4 / HUC28-4	14	6 1/8	7	2 1/2	Min.	(10) 0.162 x 3 1/2	(4) 0.162 x 3 1/2	755	1,490	1,680	1,800	*	—
		14	6 1/8	7	2 1/2	Max.	(14) 0.162 x 3 1/2	(6) 0.162 x 3 1/2	1,135	2,085	2,350	2,530	*	

See footnotes on p. 108.

Codes: See p. 11 for Code Reference Key Chart

C-C-2021 ©2021 SIMPSON STRONG-TIE COMPANY INC.

Face-Mount Hangers — Solid Sawn Lumber (DF/SP)

These products are available with additional corrosion protection. For more information, see p. 14.

SS For stainless-steel fasteners, see p. 21.

SD Many of these products are approved for installation with Strong-Drive® SD Connector screws. See pp. 348–352 for more information.

	Joist Size	Model No.	Ga.	Dimensions (in.) W	H	B	Min./ Max.	Fasteners (in.) Header	Joist	DF/SP Allowable Loads (lb.) Uplift (160)	Floor (100)	Snow (115)	Roof (125)	Installed Cost Index (ICI)	Code Ref.
	Sawn Lumber Sizes														
SS	2x10	LUS28	18	1 9/16	6 5/8	1 3/4	—	(6) 0.148 x 3	(4) 0.148 x 3	1,165	1,100	1,260	1,350	Lowest	IBC, FL, LA
		LU28	20	1 9/16	6 3/8	1 1/2	—	(8) 0.162 x 3 1/2	(6) 0.148 x 1 1/2	850	1,110	1,180	1,180	13%	
SS		LUS210	18	1 9/16	7 13/16	1 3/4	—	(8) 0.148 x 3	(4) 0.148 x 3	1,165	1,335	1,530	1,640	15%	
		LU210	20	1 9/16	7 13/16	1 1/2	—	(10) 0.162 x 3 1/2	(6) 0.148 x 1 1/2	850	1,390	1,580	1,615	28%	
		U210	16	1 9/16	7 13/16	2	—	(10) 0.162 x 3 1/2	(6) 0.148 x 1 1/2	990	1,440	1,565	1,565	76%	
SS		LUC210Z	18	1 9/16	7 3/4	1 3/4	—	(10) 0.162 x 3 1/2	(6) 0.148 x 1 1/2	985	1,410	1,605	1,735	180%	
		HU210	14	1 9/16	7 1/8	2 1/4	—	(8) 0.162 x 3 1/2	(4) 0.148 x 1 1/2	605	1,190	1,345	1,440	225%	
		HUS210	16	1 5/8	9	3	—	(30) 0.162 x 3 1/2	(10) 0.162 x 3 1/2	2,635	5,450	5,795	5,830	450%	
		HGUS210	12	1 5/8	9 1/8	5	—	(46) 0.162 x 3 1/2	(16) 0.162 x 3 1/2	2,090	9,100	9,100	9,100	*	
	DBL 2X10	LUS28-2	18	3 1/8	7	2	—	(6) 0.162 x 3 1/2	(4) 0.162 x 3 1/2	1,060	1,315	1,490	1,610	Lowest	
		LUS210-2	18	3 1/8	9	2	—	(8) 0.162 x 3 1/2	(6) 0.162 x 3 1/2	1,445	1,830	2,075	2,245	34%	
		U210-2	16	3 1/8	8 1/2	2	—	(14) 0.162 x 3 1/2	(6) 0.148 x 3	990	2,015	2,280	2,465	88%	
		HUS210-2	14	3 1/8	9 3/16	2	—	(8) 0.162 x 3 1/2	(8) 0.162 x 3 1/2	3,270	2,110	2,385	2,575	217%	
		HU210-2 / HUC210-2	14	3 1/8	8 5/8	2 1/2	Min.	(14) 0.162 x 3 1/2	(6) 0.148 x 3	1,135	2,085	2,350	2,520	441%	
			14	3 1/8	8 5/8	2 1/2	Max.	(18) 0.162 x 3 1/2	(10) 0.148 x 3	1,895	2,680	3,020	3,250	467%	
SS		HUCQ210-2-SDS	14	3 1/4	9	3	—	(12) 1/4 x 2 1/2 SDS	(6) 1/4 x 2 1/2 SDS	2,345	4,315	4,315	4,315	*	
		HHUS210-2	14	3 5/16	9 5/32	3	—	(30) 0.162 x 3 1/2	(10) 0.162 x 3 1/2	3,550	5,705	6,435	6,485	*	
	TPL 2X10	LUS28-3	18	4 5/8	6 1/4	2	—	(6) 0.162 x 3 1/2	(4) 0.162 x 3 1/2	1,060	1,315	1,490	1,610	*	
		LUS210-3	18	4 5/8	8 3/16	2	—	(8) 0.162 x 3 1/2	(6) 0.162 x 3 1/2	1,445	1,830	2,075	2,245	*	
		U210-3	16	4 5/8	7 3/4	2	—	(14) 0.162 x 3 1/2	(6) 0.148 x 3	990	2,015	2,280	2,465	*	
		HU210-3 / HUC210-3	14	4 11/16	8 1/16	2 1/2	Min.	(14) 0.162 x 3 1/2	(6) 0.148 x 3	1,135	2,085	2,350	2,520	*	
			14	4 11/16	8 1/16	2 1/2	Max.	(18) 0.162 x 3 1/2	(10) 0.148 x 3	1,895	2,680	3,020	3,250	*	
		HHUS210-3	14	4 11/16	8 7/8	3	—	(30) 0.162 x 3 1/2	(10) 0.162 x 3 1/2	3,405	5,640	6,380	6,485	*	FL
		HGUS210-3	12	4 15/16	9 1/8	4	—	(46) 0.162 x 3 1/2	(16) 0.162 x 3 1/2	4,095	9,100	9,100	9,100	*	IBC, FL, LA
		HUCQ210-3-SDS	14	4 5/8	9	3	—	(12) 1/4 x 2 1/2 SDS	(6) 1/4 x 2 1/2 SDS	2,345	4,315	4,315	4,315	*	
	QUAD 2x10	HU210-4 / HUC210-4	14	6 1/8	8 3/8	2 1/2	Min.	(14) 0.162 x 3 1/2	(6) 0.162 x 3 1/2	1,345	2,085	2,350	2,520	*	
			14	6 1/8	8 3/8	2 1/2	Max.	(18) 0.162 x 3 1/2	(8) 0.162 x 3 1/2	1,795	2,680	3,020	3,250	*	
		HHUS210-4	14	6 1/8	8 7/8	3	—	(30) 0.162 x 3 1/2	(10) 0.162 x 3 1/2	3,405	5,640	6,380	6,485	*	FL
		HGUS210-4	12	6 9/16	9 1/8	4	—	(46) 0.162 x 3 1/2	(16) 0.162 x 3 1/2	4,095	9,100	9,100	9,100	*	IBC, FL, LA
	2x12	LUS210	18	1 9/16	7 13/16	1 3/4	—	(8) 0.148 x 3	(4) 0.148 x 3	1,165	1,335	1,530	1,640	Lowest	
		LU210	20	1 9/16	7 13/16	1 1/2	—	(10) 0.162 x 3 1/2	(6) 0.148 x 1 1/2	850	1,390	1,580	1,615	11%	
		U210	16	1 9/16	7 13/16	2	—	(10) 0.162 x 3 1/2	(6) 0.148 x 1 1/2	990	1,440	1,565	1,565	53%	
SS		LUC210Z	18	1 9/16	7 3/4	1 3/4	—	(10) 0.162 x 3 1/2	(6) 0.148 x 1 1/2	985	1,410	1,605	1,735	180%	
		HU212	14	1 9/16	9	2 1/4	—	(10) 0.162 x 3 1/2	(6) 0.148 x 1 1/2	1,135	1,490	1,680	1,800	347%	
		HUS210	16	1 5/8	9	3	—	(30) 0.162 x 3 1/2	(10) 0.162 x 3 1/2	2,635	5,450	5,795	5,830	378%	
SS	DBL 2x12	LUS210-2	18	3 1/8	9	2	—	(8) 0.162 x 3 1/2	(6) 0.162 x 3 1/2	1,445	1,830	2,075	2,245	Lowest	
		U210-2	16	3 1/8	8 1/2	2	—	(14) 0.162 x 3 1/2	(6) 0.148 x 3	990	2,015	2,280	2,465	40%	
		LUS214-2	18	3 1/8	10 15/16	2	—	(10) 0.162 x 3 1/2	(6) 0.162 x 3 1/2	1,445	2,110	2,395	2,590	56%	
		HUS210-2	14	3 1/8	9 3/16	2	—	(8) 0.162 x 3 1/2	(8) 0.162 x 3 1/2	3,270	2,110	2,385	2,575	*	
		HUS212-2	14	3 1/8	10 3/4	2	—	(10) 0.162 x 3 1/2	(10) 0.162 x 3 1/2	3,435	2,635	2,985	3,220	*	
		HU212-2 / HUC212-2	14	3 1/8	10 9/16	2 1/2	Min.	(16) 0.162 x 3 1/2	(6) 0.148 x 3	1,135	2,385	2,690	2,880	*	
			14	3 1/8	10 9/16	2 1/2	Max.	(22) 0.162 x 3 1/2	(10) 0.148 x 3	1,895	3,275	3,695	3,970	411%	
SS		HUCQ210-2-SDS	14	3 1/4	9	3	—	(12) 1/4 x 2 1/2 SDS	(6) 1/4 x 2 1/2 SDS	2,345	4,315	4,315	4,315	*	
	TPL 2x12	LUS210-3	18	4 5/8	8 3/16	2	—	(8) 0.162 x 3 1/2	(6) 0.162 x 3 1/2	1,445	1,830	2,075	2,245	*	
		HU212-3 / HUC212-3	14	4 11/16	9 13/16	2 1/2	Min.	(16) 0.162 x 3 1/2	(6) 0.148 x 3	1,135	2,385	2,690	2,880	*	
			14	4 11/16	9 13/16	2 1/2	Max.	(22) 0.162 x 3 1/2	(10) 0.148 x 3	1,895	3,275	3,695	3,970	*	
		U210-3	16	4 5/8	7 3/4	2	—	(14) 0.162 x 3 1/2	(6) 0.148 x 3	990	2,015	2,280	2,465	*	
SS		HUCQ210-3-SDS	14	4 5/8	9	3	—	(12) 1/4 x 2 1/2 SDS	(6) 1/4 x 2 1/2 SDS	2,345	4,315	4,315	4,315	*	

See footnotes on p. 108.

Codes: See p. 11 for Code Reference Key Chart

C-C-2021 ©2021 SIMPSON STRONG-TIE COMPANY INC.

Face-Mount Hangers — Solid Sawn Lumber (DF/SP)

These products are available with additional corrosion protection. For more information, see p. 14.

SS For stainless-steel fasteners, see p. 21.

SD Many of these products are approved for installation with Strong-Drive® SD Connector screws. See pp. 348–352 for more information.

Joist Size	Model No.	Ga.	Dimensions (in.) W	Dimensions (in.) H	Dimensions (in.) B	Min./Max.	Fasteners (in.) Header	Fasteners (in.) Joist	DF/SP Allowable Loads (lb.) Uplift (160)	Floor (100)	Snow (115)	Roof (125)	Installed Cost Index (ICI)	Code Ref.
Sawn Lumber Sizes														
2x14	LUS210	18	1 9/16	7 13/16	1 3/4	—	(8) 0.148 x 3	(4) 0.148 x 3	1,165	1,335	1,530	1,640	Lowest	
	LU210	20	1 9/16	7 13/16	1 1/2	—	(10) 0.162 x 3 1/2	(6) 0.148 x 1 1/2	850	1,390	1,580	1,615	11%	
	U210	16	1 9/16	7 13/16	2	—	(10) 0.162 x 3 1/2	(6) 0.148 x 1 1/2	990	1,440	1,565	1,565	53%	
	HU214	14	1 9/16	10 1/8	2 1/4	—	(12) 0.162 x 3 1/2	(6) 0.148 x 1 1/2	1,135	1,790	2,015	2,160	88%	
	U214	16	1 9/16	10	2	—	(12) 0.162 x 3 1/2	(8) 0.148 x 1 1/2	990	1,730	1,955	2,110	147%	
DBL 2x14	U210-2	16	3 1/8	8 1/2	2	—	(14) 0.162 x 3 1/2	(6) 0.148 x 3	990	2,015	2,280	2,465	Lowest	
	LUS214-2	18	3 1/8	10 15/16	2	—	(10) 0.162 x 3 1/2	(6) 0.162 x 3 1/2	1,445	2,110	2,395	2,590	12%	
	HUS212-2	14	3 1/8	10 3/4	2	—	(10) 0.162 x 3 1/2	(10) 0.162 x 3 1/2	3,435	2,635	2,985	3,220	83%	
	HU212-2 / HUC212-2	14	3 1/8	10 9/16	2 1/2	Min.	(16) 0.162 x 3 1/2	(6) 0.148 x 3	1,135	2,385	2,690	2,880	248%	
		14	3 1/8	10 9/16	2 1/2	Max.	(22) 0.162 x 3 1/2	(10) 0.148 x 3	1,795	3,275	3,695	3,970	265%	
	HU214-2 / HUC214-2	14	3 1/8	12 1/8	2 1/2	Min.	(18) 0.162 x 3 1/2	(8) 0.148 x 3	1,510	2,680	3,025	3,240	259%	
		14	3 1/8	12 1/8	2 1/2	Max.	(24) 0.162 x 3 1/2	(12) 0.148 x 3	2,015	3,570	4,030	4,335	276%	
	HUCQ210-2-SDS	14	3 1/4	9	3	—	(12) 1/4 x 2 1/2 SDS	(6) 1/4 x 2 1/2 SDS	2,345	4,315	4,315	4,315	*	
TPL 2x14	U210-3	16	4 5/8	7 3/4	2	—	(14) 0.162 x 3 1/2	(6) 0.148 x 3	990	2,015	2,280	2,465	*	
	HU214-3 / HUC214-3	14	4 11/16	12 1/16	2 1/2	Min.	(18) 0.162 x 3 1/2	(8) 0.148 x 3	1,510	2,680	3,025	3,240	*	
		14	4 11/16	12 1/16	2 1/2	Max.	(24) 0.162 x 3 1/2	(12) 0.148 x 3	2,015	3,570	4,030	4,335	*	
	HUCQ210-3-SDS	14	4 5/8	9	3	—	(12) 1/4 x 2 1/2 SDS	(6) 1/4 x 2 1/2 SDS	2,345	4,315	4,315	4,315	*	
2x16	U214	16	1 9/16	10	2	—	(12) 0.162 x 3 1/2	(8) 0.148 x 1 1/2	990	1,730	1,955	2,110	Lowest	
	HU214	14	1 9/16	10 1/8	2 1/4	—	(12) 0.162 x 3 1/2	(6) 0.148 x 1 1/2	1,135	1,790	2,015	2,160	130%	
	HU216	14	1 9/16	12 15/16	2 1/4	—	(18) 0.162 x 3 1/2	(8) 0.148 x 1 1/2	1,510	2,680	3,025	3,240	130%	
DBL 2x16	HUS212-2	14	3 1/8	10 3/4	2	—	(10) 0.162 x 3 1/2	(10) 0.162 x 3 1/2	3,435	2,635	2,985	3,220	Lowest	IBC, FL, LA
	HU216-2 / HUC216-2	14	3 1/8	13 7/8	2 1/2	Min.	(20) 0.162 x 3 1/2	(8) 0.148 x 3	1,510	2,980	3,360	3,600	111%	
		14	3 1/8	13 7/8	2 1/2	Max.	(26) 0.162 x 3 1/2	(12) 0.148 x 3	2,015	3,870	4,365	4,695	120%	
TPL 2x16	HU216-3 / HUC216-3	14	4 11/16	13 7/8	2 1/2	Min.	(20) 0.162 x 3 1/2	(8) 0.148 x 3	1,510	2,980	3,360	3,600	*	
		14	4 11/16	13 7/8	2 1/2	Max.	(26) 0.162 x 3 1/2	(12) 0.148 x 3	2,015	3,870	4,365	4,695	*	
3x4	U34	16	2 9/16	3 3/8	2	—	(4) 0.162 x 3 1/2	(2) 0.148 x 1 1/2	240	575	650	705	*	
	HU34 / HUC34	14	2 9/16	3 3/8	2 1/2	—	(4) 0.162 x 3 1/2	(2) 0.148 x 1 1/2	380	595	670	720	*	
3x6	U36	16	2 9/16	5 3/8	2	—	(8) 0.162 x 3 1/2	(4) 0.148 x 1 1/2	535	1,150	1,305	1,410	*	
	LUS36	18	2 9/16	5 1/4	2	—	(4) 0.162 x 3 1/2	(4) 0.162 x 3 1/2	1,060	1,030	1,170	1,265	*	
	HU36 / HUC36	14	2 9/16	5 1/4	2 1/2	—	(8) 0.162 x 3 1/2	(4) 0.148 x 1 1/2	605	1,190	1,345	1,440	*	
3x8	U36	16	2 9/16	5 3/8	2	—	(8) 0.162 x 3 1/2	(4) 0.148 x 1 1/2	535	1,150	1,305	1,410	*	
	LUS36	18	2 9/16	5 1/4	2	—	(4) 0.162 x 3 1/2	(4) 0.162 x 3 1/2	1,060	1,030	1,170	1,265	*	
	HU38 / HUC38	14	2 9/16	5 5/8	2 1/2	—	(10) 0.162 x 3 1/2	(4) 0.148 x 1 1/2	605	1,490	1,680	1,800	*	
3x10	U310	16	2 9/16	8 7/8	2	—	(14) 0.162 x 3 1/2	(6) 0.148 x 1 1/2	990	2,015	2,280	2,465	*	
	LUS310	18	2 9/16	7 1/4	2	—	(6) 0.162 x 3 1/2	(4) 0.162 x 3 1/2	1,045	1,315	1,500	1,625	*	
	HU310 / HUC310	14	2 9/16	8 7/8	2 1/2	—	(14) 0.162 x 3 1/2	(6) 0.148 x 1 1/2	905	2,085	2,350	2,520	*	
	HUCQ310-SDS	14	2 9/16	9	3	—	(8) 1/4 x 2 1/2 SDS	(4) 1/4 x 2 1/2 SDS	1,350	3,120	3,590	3,860	*	
3x12	U310	16	2 9/16	8 7/8	2	—	(14) 0.162 x 3 1/2	(6) 0.148 x 1 1/2	990	2,015	2,280	2,465	*	
	LUS310	18	2 9/16	7 1/4	2	—	(6) 0.162 x 3 1/2	(4) 0.162 x 3 1/2	1,060	1,315	1,500	1,625	*	
	HU312 / HUC312	14	2 9/16	10 7/8	2 1/2	—	(16) 0.162 x 3 1/2	(6) 0.148 x 1 1/2	905	2,385	2,690	2,880	*	
	HUCQ310-SDS	14	2 9/16	9	3	—	(8) 1/4 x 2 1/2 SDS	(4) 1/4 x 2 1/2 SDS	1,350	3,120	3,590	3,860	*	

See footnotes on p. 108.

Codes: See p. 11 for Code Reference Key Chart

C-C-2021 ©2021 SIMPSON STRONG-TIE COMPANY INC.

Face-Mount Hangers — Solid Sawn Lumber (DF/SP)

These products are available with additional corrosion protection. For more information, see p. 14.

SS For stainless-steel fasteners, see p. 21.

SD Many of these products are approved for installation with Strong-Drive® SD Connector screws. See pp. 348–352 for more information.

Joist Size	Model No.	Ga.	Dimensions (in.) W	H	B	Min./Max.	Fasteners (in.) Header	Joist	DF/SP Allowable Loads (lb.) Uplift (160)	Floor (100)	Snow (115)	Roof (125)	Installed Cost Index (ICI)	Code Ref.
Sawn Lumber Sizes														
3x14	U314	16	2 9/16	10 1/2	2	—	(16) 0.162 x 3 1/2	(6) 0.148 x 1 1/2	990	2,305	2,610	2,815	*	IBC, FL, LA
	HU314 / HUC314	14	2 9/16	12 7/16	2 1/2	—	(18) 0.162 x 3 1/2	(8) 0.148 x 1 1/2	1,510	2,680	3,025	3,240	*	
	HUCQ310-SDS	14	2 9/16	9	3	—	(8) 1/4 x 2 1/2 SDS	(4) 1/4 x 2 1/2 SDS	1,350	3,120	3,590	3,860	*	
3x16	U314	16	2 9/16	10 1/2	2	—	(16) 0.162 x 3 1/2	(6) 0.148 x 1 1/2	990	2,305	2,610	2,815	*	
	HU316 / HUC316	14	2 9/16	14 5/32	2 1/2	—	(20) 0.162 x 3 1/2	(8) 0.148 x 1 1/2	1,510	2,980	3,360	3,600	*	
4x4	LUS44	18	3 9/16	3	2	—	(4) 0.162 x 3 1/2	(2) 0.162 x 3 1/2	410	800	905	980	Lowest	
	U44	16	3 9/16	2 7/8	2	—	(4) 0.162 x 3 1/2	(2) 0.148 x 3	240	575	650	705	20%	
	HU44 / HUC44	14	3 9/16	2 7/8	2 1/2	—	(4) 0.162 x 3 1/2	(2) 0.148 x 3	380	595	670	720	161%	
4x6	LUS46	18	3 9/16	4 3/4	2	—	(4) 0.162 x 3 1/2	(4) 0.162 x 3 1/2	1,060	1,030	1,170	1,265	Lowest	
	U46	16	3 9/16	4 7/8	2	—	(8) 0.162 x 3 1/2	(4) 0.148 x 3	535	1,150	1,305	1,410	37%	
	HUS46	14	3 9/16	5	2	—	(4) 0.162 x 3 1/2	(4) 0.162 x 3 1/2	1,165	1,055	1,195	1,290	152%	
	HU46 / HUC46	14	3 9/16	4 3/4	2 1/2	Min.	(8) 0.162 x 3 1/2	(4) 0.148 x 3	755	1,190	1,345	1,440	163%	
		14	3 9/16	4 3/4	2 1/2	Max.	(12) 0.162 x 3 1/2	(6) 0.148 x 3	1,135	1,785	2,015	2,165	185%	
4x8	LUS46	18	3 9/16	4 3/4	2	—	(4) 0.162 x 3 1/2	(4) 0.162 x 3 1/2	1,060	1,030	1,170	1,265	Lowest	
	U46	16	3 9/16	4 7/8	2	—	(8) 0.162 x 3 1/2	(4) 0.148 x 3	535	1,150	1,305	1,410	37%	
	LUS48	18	3 9/16	6 3/4	2	—	(6) 0.162 x 3 1/2	(4) 0.162 x 3 1/2	1,060	1,315	1,490	1,610	40%	
	HUS48	14	3 9/16	6 15/16	2	—	(6) 0.162 x 3 1/2	(6) 0.162 x 3 1/2	1,320	1,580	1,790	1,930	203%	
	HU48 / HUC48	14	3 9/16	6 1/8	2 1/2	Min.	(10) 0.162 x 3 1/2	(4) 0.148 x 3	755	1,490	1,680	1,800	213%	
		14	3 9/16	6 1/8	2 1/2	Max.	(14) 0.162 x 3 1/2	(6) 0.148 x 3	1,135	2,085	2,350	2,530	235%	
4x10	LUS48	18	3 9/16	6 3/4	2	—	(6) 0.162 x 3 1/2	(4) 0.162 x 3 1/2	1,060	1,315	1,490	1,610	Lowest	
	LUS410	18	3 9/16	8 3/4	2	—	(8) 0.162 x 3 1/2	(6) 0.162 x 3 1/2	1,445	1,830	2,075	2,245	19%	
	U410	16	3 9/16	8 3/8	2	—	(14) 0.162 x 3 1/2	(6) 0.148 x 3	990	2,015	2,280	2,465	74%	
	HUS410	14	3 9/16	8 15/16	2	—	(8) 0.162 x 3 1/2	(8) 0.162 x 3 1/2	3,220	2,110	2,385	2,575	154%	
	HU410 / HUC410	14	3 9/16	8 3/8	2 1/2	Min.	(14) 0.162 x 3 1/2	(6) 0.148 x 3	1,135	2,085	2,350	2,520	232%	
		14	3 9/16	8 3/8	2 1/2	Max.	(18) 0.162 x 3 1/2	(10) 0.148 x 3	1,795	2,680	3,020	3,250	253%	
	HUCQ410-SDS	14	3 9/16	9	3	—	(12) 1/4 x 2 1/2 SDS	(6) 1/4 x 2 1/2 SDS	2,265	4,500	4,500	4,500	*	
4x12	LUS410	18	3 9/16	8 3/4	2	—	(8) 0.162 x 3 1/2	(6) 0.162 x 3 1/2	1,445	1,830	2,075	2,245	Lowest	
	LUS414	18	3 9/16	10 3/4	2	—	(10) 0.162 x 3 1/2	(6) 0.162 x 3 1/2	1,445	2,110	2,395	2,590	33%	
	U410	16	3 9/16	8 3/8	2	—	(14) 0.162 x 3 1/2	(6) 0.148 x 3	990	2,015	2,280	2,465	46%	
	HUS410	14	3 9/16	8 5/16	2	—	(8) 0.162 x 3 1/2	(8) 0.162 x 3 1/2	3,220	2,110	2,385	2,575	114%	
	HUS412	14	3 9/16	10 1/2	2	—	(10) 0.162 x 3 1/2	(10) 0.162 x 3 1/2	3,435	2,635	2,985	3,220	129%	
	HU412 / HUC412	14	3 9/16	10 3/8	2 1/2	Min.	(16) 0.162 x 3 1/2	(6) 0.148 x 3	1,135	2,385	2,690	2,880	268%	
		14	3 9/16	10 3/8	2 1/2	Max.	(22) 0.162 x 3 1/2	(10) 0.148 x 3	1,795	3,275	3,695	3,970	290%	
	HUCQ410-SDS	14	3 9/16	9	3	—	(12) 1/4 x 2 1/2 SDS	(6) 1/4 x 2 1/2 SDS	2,265	4,500	4,500	4,500	*	
	HUCQ412-SDS	14	3 9/16	11	3	—	(14) 1/4 x 2 1/2 SDS	(6) 1/4 x 2 1/2 SDS	2,265	5,045	5,045	5,045	*	
4x14	LUS410	18	3 9/16	8 3/4	2	—	(8) 0.162 x 3 1/2	(6) 0.162 x 3 1/2	1,445	1,830	2,075	2,245	Lowest	
	LUS414	18	3 9/16	10 3/4	2	—	(10) 0.162 x 3 1/2	(6) 0.162 x 3 1/2	1,445	2,110	2,395	2,590	33%	
	U414	16	3 9/16	10	2	—	(16) 0.162 x 3 1/2	(6) 0.148 x 3	990	2,305	2,610	2,815	93%	
	HUS412	14	3 9/16	10 1/2	2	—	(10) 0.162 x 3 1/2	(10) 0.162 x 3 1/2	3,435	2,635	2,985	3,220	129%	
	HU414 / HUC414	14	3 9/16	11 15/16	2 1/2	Min.	(18) 0.162 x 3 1/2	(8) 0.148 x 3	1,510	2,680	3,025	3,240	333%	
		14	3 9/16	11 15/16	2 1/2	Max.	(24) 0.162 x 3 1/2	(12) 0.148 x 3	2,015	3,570	4,030	4,335	355%	
	HUCQ412-SDS	14	3 9/16	11	3	—	(14) 1/4 x 2 1/2 SDS	(6) 1/4 x 2 1/2 SDS	2,265	5,045	5,045	5,045	*	

See footnotes on p. 108.

Codes: See p. 11 for Code Reference Key Chart

C-C-2021 ©2021 SIMPSON STRONG-TIE COMPANY INC.

Face-Mount Hangers — Solid Sawn Lumber (DF/SP)

SIMPSON Strong-Tie®

These products are available with additional corrosion protection. For more information, see p. 14.

SS For stainless-steel fasteners, see p. 21.

SD Many of these products are approved for installation with Strong-Drive® SD Connector screws. See pp. 348–352 for more information.

Joist Size	Model No.	Ga.	Dimensions (in.) W	H	B	Min./Max.	Fasteners (in.) Header	Joist	DF/SP Allowable Loads (lb.) Uplift (160)	Floor (100)	Snow (115)	Roof (125)	Installed Cost Index (ICI)	Code Ref.
Sawn Lumber Sizes														
4x16	U414	16	3 9/16	10	2	—	(16) 0.162 x 3½	(6) 0.148 x 3	990	2,305	2,610	2,815	Lowest	IBC, FL, LA
	HUS412	14	3 9/16	10½	2	—	(10) 0.162 x 3½	(10) 0.162 x 3½	3,435	2,635	2,985	3,220	19%	
	HU416 / HUC416	14	3 9/16	13 11/16	2½	Min.	(20) 0.162 x 3½	(8) 0.148 x 3	1,510	2,980	3,360	3,600	167%	
		14	3 9/16	13 11/16	2½	Max.	(26) 0.162 x 3½	(12) 0.148 x 3	2,015	3,870	4,365	4,695	178%	
6x6	U66	16	5½	5	2	—	(8) 0.162 x 3½	(4) 0.148 x 3	535	1,150	1,305	1,410	*	
	HU66 / HUC66	14	5½	4 3/16	2½	Min.	(8) 0.162 x 3½	(4) 0.162 x 3½	895	1,190	1,345	1,440	*	
		14	5½	4 3/16	2½	Max.	(12) 0.162 x 3½	(6) 0.162 x 3½	1,345	1,785	2,015	2,165	*	
6x8	U66	16	5½	5	2	—	(8) 0.162 x 3½	(4) 0.148 x 3	535	1,150	1,305	1,410	*	
	HU68 / HUC68	14	5½	5 13/16	2½	Min.	(10) 0.162 x 3½	(4) 0.162 x 3½	895	1,490	1,680	1,800	*	
		14	5½	5 13/16	2½	Max.	(14) 0.162 x 3½	(6) 0.162 x 3½	1,345	2,085	2,350	2,530	*	
6x10	U610	16	5½	8.5	2	—	(14) 0.162 x 3½	(6) 0.148 x 3	990	2,015	2,280	2,465	*	
	HU610 / HUC610	14	5½	7⅝	2½	Min.	(14) 0.162 x 3½	(6) 0.162 x 3½	1,345	2,085	2,350	2,520	*	
		14	5½	7⅝	2½	Max.	(18) 0.162 x 3½	(8) 0.162 x 3½	1,795	2,680	3,020	3,250	*	
	HUCQ610-SDS	14	5½	9	3	—	(12) ¼ x 2½ SDS	(6) ¼ x 2½ SDS	2,325	4,680	5,185	5,185	*	
6x12	HU612 / HUC612	14	5½	9⅜	2½	Min.	(16) 0.162 x 3½	(6) 0.162 x 3½	1,345	2,385	2,690	2,880	*	
		14	5½	9⅜	2½	Max.	(22) 0.162 x 3½	(8) 0.162 x 3½	1,795	3,275	3,695	3,970	*	
	HUCQ610-SDS	14	5½	9	3	—	(12) ¼ x 2½ SDS	(6) ¼ x 2½ SDS	2,325	4,680	5,185	5,185	*	
	HUCQ612-SDS	14	5½	11	3	—	(14) ¼ x 2½ SDS	(6) ¼ x 2½ SDS	2,325	5,185	5,185	5,185	*	
6x14	HU614 / HUC614	14	5½	11⅝	2½	Min.	(18) 0.162 x 3½	(8) 0.162 x 3½	1,780	2,680	3,025	3,240	*	
		14	5½	11⅝	2½	Max.	(24) 0.162 x 3½	(12) 0.162 x 3½	2,695	3,570	4,030	4,335	*	
	HUCQ610-SDS	14	5½	9	3	—	(12) ¼ x 2½ SDS	(6) ¼ x 2½ SDS	2,325	4,680	5,185	5,185	*	
	HUCQ612-SDS	14	5½	11	3	—	(14) ¼ x 2½ SDS	(6) ¼ x 2½ SDS	2,325	5,185	5,185	5,185	*	
6x16	HU616 / HUC616	14	5½	13⅜	2½	Min.	(20) 0.162 x 3½	(8) 0.162 x 3½	1,780	2,980	3,360	3,600	*	
		14	5½	13⅜	2½	Max.	(26) 0.162 x 3½	(12) 0.162 x 3½	2,695	3,870	4,365	4,695	*	
	HUCQ612-SDS	14	5½	11	3	—	(14) ¼ x 2½ SDS	(6) ¼ x 2½ SDS	2,325	5,185	5,185	5,185	*	
8x8	HU88 / HUC88	14	7½	6⅝	2½	Min.	(10) 0.162 x 3½	(4) 0.162 x 3½	895	1,490	1,680	1,800	*	
		14	7½	6⅝	2½	Max.	(14) 0.162 x 3½	(6) 0.162 x 3½	1,345	2,085	2,350	2,530	*	
8x10	HU810 / HUC810	14	7½	8⅜	2½	Min.	(14) 0.162 x 3½	(6) 0.162 x 3½	1,345	2,085	2,350	2,520	*	
		14	7½	8⅜	2½	Max.	(18) 0.162 x 3½	(8) 0.162 x 3½	1,795	2,680	3,020	3,250	*	
8x12	HU812 / HUC812	14	7½	10⅛	2½	Min.	(16) 0.162 x 3½	(6) 0.162 x 3½	1,345	2,385	2,690	2,880	*	
		14	7½	10⅛	2½	Max.	(22) 0.162 x 3½	(8) 0.162 x 3½	1,795	3,275	3,695	3,970	*	
8x14	HU814 / HUC814	14	7½	11⅞	2½	Min.	(18) 0.162 x 3½	(8) 0.162 x 3½	1,780	2,680	3,025	3,240	*	
		14	7½	11⅞	2½	Max.	(24) 0.162 x 3½	(12) 0.162 x 3½	2,695	3,570	4,030	4,335	*	
8x16	HU816 / HUC816	14	7½	13⅝	2½	Min.	(20) 0.162 x 3½	(8) 0.162 x 3½	1,780	2,980	3,360	3,600	*	
		14	7½	13⅝	2½	Max.	(26) 0.162 x 3½	(12) 0.162 x 3½	2,695	3,870	4,365	4,695	*	

1. Uplift loads have been increased for earthquake or wind loading with no further increase allowed. Reduce where other loads govern.
2. For minimum nailing quantity and load values, fill all round holes; for maximum nailing quantity and load values, fill all round and triangular holes.
3. DF/SP loads can be used for SCL with an equivalent specific gravity of 0.50 or greater.
4. Truss chord cross-grain tension may limit allowable loads in accordance with ANSI/TPI 1-2014. Simpson Strong-Tie® Connector Selector® software includes the evaluation of cross-grain tension in its hanger allowable loads. For additional information, contact Simpson Strong-Tie.
5. **Fasteners:** Nail dimensions are listed diameter by length. See pp. 21–22 for fastener information.
6. Hangers with an "*" do not have an Installed Cost Index.

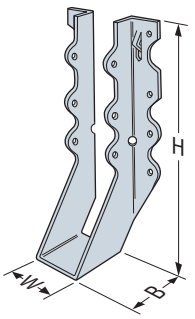

Codes: See p. 11 for Code Reference Key Chart

C-C-2021 ©2021 SIMPSON STRONG-TIE COMPANY INC.

Face-Mount Hangers — Solid Sawn Lumber (SPF/HF)

SIMPSON Strong-Tie®

These products are available with additional corrosion protection. For more information, see p. 14.

SS For stainless-steel fasteners, see p. 21.

SD Many of these products are approved for installation with Strong-Drive® SD Connector screws. See pp. 348–352 for more information.

Joist Size	Model No.	Ga.	Dimensions (in.) W	H	B	Min./ Max.	Fasteners (in.) Header	Joist	SPF/HF Allowable Loads (lb.) Uplift (160)	Floor (100)	Snow (115)	Roof (125)
Sawn Lumber Sizes												
2x4	LU24	20	1 9/16	3 1/8	1 1/2	—	(4) 0.162 x 3 1/2	(2) 0.148 x 1 1/2	205	475	540	565
	LUS24	18	1 9/16	3 1/8	1 3/4	—	(4) 0.148 x 3	(2) 0.148 x 3	375	575	660	705
	U24	16	1 9/16	3 1/8	1 1/2	—	(4) 0.162 x 3 1/2	(2) 0.148 x 1 1/2	205	495	560	605
	HU26	14	1 9/16	3 1/16	2 1/4	—	(4) 0.162 x 3 1/2	(2) 0.148 x 1 1/2	260	510	575	620
DBL 2x4	LUS24-2	18	3 1/8	3 1/8	2	—	(4) 0.162 x 3 1/2	(2) 0.162 x 3 1/2	355	690	780	845
	U24-2	16	3 1/8	3	2	—	(4) 0.162 x 3 1/2	(2) 0.148 x 3	205	495	560	605
	HU24-2 / HUC24-2	14	3 1/8	3 1/16	2 1/2	—	(4) 0.162 x 3 1/2	(2) 0.148 x 3	325	510	575	620
2x6	LUS26	18	1 9/16	4 3/4	1 3/4	—	(4) 0.148 x 3	(4) 0.148 x 3	1,000	745	850	910
	LU26	20	1 9/16	4 3/4	1 1/2	—	(6) 0.162 x 3 1/2	(4) 0.148 x 1 1/2	465	720	815	885
	U26	16	1 9/16	4 3/4	2	—	(6) 0.162 x 3 1/2	(4) 0.148 x 1 1/2	460	745	845	905
	LUC26Z	18	1 9/16	4 3/4	1 3/4	—	(6) 0.162 x 3 1/2	(4) 0.148 x 1 1/2	630	610	695	755
	HU26	14	1 9/16	3 1/16	2 1/4	—	(4) 0.162 x 3 1/2	(2) 0.148 x 1 1/2	260	510	575	620
	HUS26	16	1 5/8	5 1/8	3	—	(14) 0.162 x 3 1/2	(6) 0.162 x 3 1/2	1,135	2,350	2,660	2,780
DBL 2x6	LUS26-2	18	3 1/8	4 7/8	2	—	(4) 0.162 x 3 1/2	(4) 0.162 x 3 1/2	910	885	1,005	1,090
	U26-2	16	3 1/8	5	2	—	(8) 0.162 x 3 1/2	(4) 0.148 x 3	460	990	1,120	1,215
	HUS26-2	14	3 1/8	5 3/16	2	—	(4) 0.162 x 3 1/2	(4) 0.162 x 3 1/2	1000	905	1,030	1,110
	HU26-2 / HUC26-2	14	3 1/8	5 3/8	2 1/2	Min.	(8) 0.162 x 3 1/2	(4) 0.148 x 3	650	1,025	1,155	1,240
		14	3 1/8	5 3/8	2 1/2	Max.	(12) 0.162 x 3 1/2	(6) 0.148 x 3	980	1,540	1,735	1,865
TPL 2x6	LUS26-3	18	4 5/8	4 1/8	2	—	(4) 0.162 x 3 1/2	(4) 0.162 x 3 1/2	910	885	1,005	1,090
	U26-3	16	4 5/8	4 1/4	2	—	(8) 0.162 x 3 1/2	(4) 0.148 x 3	460	990	1,120	1,215
	HU26-3 / HUC26-3	14	4 11/16	4 5/8	2 1/2	Min.	(8) 0.162 x 3 1/2	(4) 0.148 x 3	650	1,025	1,155	1,240
		14	4 11/16	4 5/8	2 1/2	Max.	(12) 0.162 x 3 1/2	(6) 0.148 x 3	980	1,540	1,735	1,865
2x8	LUS26	18	1 9/16	4 3/4	1 3/4	—	(4) 0.148 x 3	(4) 0.148 x 3	1,000	745	850	910
	LU26	20	1 9/16	4 3/4	1 1/2	—	(6) 0.162 x 3 1/2	(4) 0.148 x 1 1/2	465	720	815	885
	LUS28	18	1 9/16	6 5/8	1 3/4	—	(6) 0.148 x 3	(4) 0.148 x 3	1,000	945	1,085	1,160
	LU28	20	1 9/16	6 3/8	1 1/2	—	(8) 0.162 x 3 1/2	(6) 0.148 x 1 1/2	730	955	1,015	1,015
	U26	16	1 9/16	4 3/4	2	—	(6) 0.162 x 3 1/2	(4) 0.148 x 1 1/2	460	745	845	905
	LUC26Z	18	1 9/16	4 3/4	1 3/4	—	(6) 0.162 x 3 1/2	(4) 0.148 x 1 1/2	630	610	695	755
	HU28	14	1 9/16	5 1/4	2 1/4	—	(6) 0.162 x 3 1/2	(4) 0.148 x 1 1/2	520	770	870	930
	HUS26	16	1 5/8	5 1/8	3	—	(14) 0.162 x 3 1/2	(6) 0.162 x 3 1/2	1,135	2,350	2,445	2,445
	HUS28	16	1 5/8	7	3	—	(22) 0.162 x 3 1/2	(8) 0.162 x 3 1/2	1,515	3,520	3,520	3,520
DBL 2x8	LUS26-2	18	3 1/8	4 7/8	2	—	(4) 0.162 x 3 1/2	(4) 0.162 x 3 1/2	910	885	1,005	1,090
	LUS28-2	18	3 1/8	7	2	—	(6) 0.162 x 3 1/2	(4) 0.162 x 3 1/2	910	1,130	1,280	1,385
	U26-2	16	3 1/8	5	2	—	(8) 0.162 x 3 1/2	(4) 0.148 x 3	460	990	1,120	1,215
	HUS28-2	14	3 1/8	7 3/16	2	—	(6) 0.162 x 3 1/2	(6) 0.162 x 3 1/2	1,135	1,360	1,540	1,660
	HU28-2 / HUC28-2	14	3 1/8	7	2 1/2	Min.	(10) 0.162 x 3 1/2	(4) 0.148 x 3	650	1,280	1,445	1,550
		14	3 1/8	7	2 1/2	Max.	(14) 0.162 x 3 1/2	(6) 0.148 x 3	980	1,795	2,025	2,180
TPL 2x8	LUS28-3	18	4 5/8	6 1/4	2	—	(6) 0.162 x 3 1/2	(4) 0.162 x 3 1/2	910	1,130	1,280	1,385
	U26-3	16	4 5/8	4 1/4	2	—	(8) 0.162 x 3 1/2	(4) 0.148 x 3	460	990	1,120	1,215
	HU26-3 / HUC26-3	14	4 11/16	4 5/8	2 1/2	Min.	(8) 0.162 x 3 1/2	(4) 0.148 x 3	650	1,025	1,155	1,240
		14	4 11/16	4 5/8	2 1/2	Max.	(12) 0.162 x 3 1/2	(6) 0.148 x 3	980	1,540	1,735	1,865
QUAD 2x8	HU28-4 / HUC28-4	14	6 1/8	7	2 1/2	Min.	(10) 0.162 x 3 1/2	(4) 0.162 x 3 1/2	650	1,280	1,445	1,550
		14	6 1/8	7	2 1/2	Max.	(14) 0.162 x 3 1/2	(6) 0.162 x 3 1/2	1,160	1,795	2,025	2,180

See footnotes on p. 113.

C-C-2021 ©2021 SIMPSON STRONG-TIE COMPANY INC.

Face-Mount Hangers — Solid Sawn Lumber (SPF/HF)

SIMPSON Strong-Tie®

These products are available with additional corrosion protection. For more information, see p. 14.

SS For stainless-steel fasteners, see p. 21.

SD Many of these products are approved for installation with Strong-Drive® SD Connector screws. See pp. 348–352 for more information.

	Joist Size	Model No.	Ga.	Dimensions (in.) W	Dimensions (in.) H	Dimensions (in.) B	Min./ Max.	Fasteners (in.) Header	Fasteners (in.) Joist	SPF/HF Allowable Loads (lb.) Uplift (160)	Floor (100)	Snow (115)	Roof (125)
	Sawn Lumber Sizes												
SS	2x10	LUS28	18	1 9/16	6 5/8	1 3/4	—	(6) 0.148 x 3	(4) 0.148 x 3	1,000	945	1,085	1,160
		LU28	20	1 9/16	6 3/8	1 1/2	—	(8) 0.162 x 3 1/2	(6) 0.148 x 1 1/2	730	955	1,015	1,015
SS		LUS210	18	1 9/16	7 13/16	1 3/4	—	(8) 0.148 x 3	(4) 0.148 x 3	1,000	1,150	1,315	1,410
		LU210	20	1 9/16	7 13/16	1 1/2	—	(10) 0.162 x 3 1/2	(6) 0.148 x 1 1/2	730	1,195	1,360	1,390
		U210	16	1 9/16	7 13/16	2	—	(10) 0.162 x 3 1/2	(6) 0.148 x 1 1/2	850	1,240	1,345	1,345
		LUC210Z	18	1 9/16	7 3/4	1 3/4	—	(10) 0.162 x 3 1/2	(6) 0.148 x 1 1/2	845	1,020	1,155	1,250
		HU210	14	1 9/16	7 1/8	2 1/4	—	(8) 0.162 x 3 1/2	(4) 0.148 x 1 1/2	520	1,025	1,155	1,240
		HUS210	16	1 5/8	9	3	—	(30) 0.162 x 3 1/2	(10) 0.162 x 3 1/2	2,265	4,685	4,985	5,015
		HGUS210	12	1 5/8	9 1/8	5	—	(46) 0.162 x 3 1/2	(16) 0.162 x 3 1/2	1,545	6,340	6,730	6,730
SS	DBL 2x10	LUS28-2	18	3 1/8	7	2	—	(6) 0.162 x 3 1/2	(4) 0.162 x 3 1/2	910	1,130	1,280	1,385
SS		LUS210-2	18	3 1/8	9	2	—	(8) 0.162 x 3 1/2	(6) 0.162 x 3 1/2	1,245	1,575	1,785	1,930
		U210-2	16	3 1/8	8 1/2	2	—	(14) 0.162 x 3 1/2	(6) 0.148 x 3	850	1,735	1,960	2,120
		HUS210-2	14	3 1/8	9 3/16	2	—	(8) 0.162 x 3 1/2	(8) 0.162 x 3 1/2	2,810	1,815	2,050	2,215
		HU210-2 / HUC210-2	14	3 1/8	8 5/8	2 1/2	Min.	(14) 0.162 x 3 1/2	(6) 0.148 x 3	975	1,795	2,020	2,165
			14	3 1/8	8 5/8	2 1/2	Max.	(18) 0.162 x 3 1/2	(10) 0.148 x 3	1,635	2,305	2,605	2,800
		HHUS210-2	14	3 5/16	8 7/8	3	—	(30) 0.162 x 3 1/2	(10) 0.162 x 3 1/2	3,055	4,905	5,535	5,575
SS		HUCQ210-2-SDS	14	3 1/4	9	3	—	(12) 1/4 x 2 1/2 SDS	(6) 1/4 x 2 1/2 SDS	2,015	3,600	3,710	3,710
	TPL 2x10	LUS28-3	18	4 5/8	6 1/4	2	—	(6) 0.162 x 3 1/2	(4) 0.162 x 3 1/2	910	1,130	1,280	1,385
		LUS210-3	18	4 5/8	8 3/16	2	—	(8) 0.162 x 3 1/2	(6) 0.162 x 3 1/2	1,245	1,575	1,785	1,930
		U210-3	16	4 5/8	7 3/4	2	—	(14) 0.162 x 3 1/2	(6) 0.148 x 3	850	1,735	1,960	2,120
		HU210-3 / HUC210-3	14	4 11/16	8 1/16	2 1/2	Min.	(14) 0.162 x 3 1/2	(6) 0.148 x 3	975	1,795	2,020	2,165
			14	4 11/16	8 1/16	2 1/2	Max.	(18) 0.162 x 3 1/2	(10) 0.148 x 3	1,635	2,305	2,605	2,800
		HHUS210-3	14	4 11/16	8 7/8	3	—	(30) 0.162 x 3 1/2	(10) 0.162 x 3 1/2	2,930	4,850	5,485	5,575
SS		HUCQ210-3-SDS	14	4 5/8	9	3	—	(12) 1/4 x 2 1/2 SDS	(6) 1/4 x 2 1/2 SDS	2,015	3,600	3,710	3,710
	QUAD 2x10	HU210-4 / HUC210-4	14	6 1/8	8 3/8	2 1/2	Min.	(14) 0.162 x 3 1/2	(6) 0.162 x 3 1/2	1,155	1,795	2,020	2,165
			14	6 1/8	8 3/8	2 1/2	Max.	(18) 0.162 x 3 1/2	(8) 0.162 x 3 1/2	1,550	2,305	2,605	2,800
		HHUS210-4	14	6 1/8	8 7/8	3	—	(30) 0.162 x 3 1/2	(10) 0.162 x 3 1/2	2,930	4,850	5,485	5,575
SS	2x12	LUS210	18	1 9/16	7 13/16	1 3/4	—	(8) 0.148 x 3	(4) 0.148 x 3	1,000	1,150	1,315	1,410
		LU210	20	1 9/16	7 13/16	1 1/2	—	(10) 0.162 x 3 1/2	(6) 0.148 x 1 1/2	730	1,195	1,360	1,390
		U210	16	1 9/16	7 13/16	2	—	(10) 0.162 x 3 1/2	(6) 0.148 x 1 1/2	850	1,240	1,345	1,345
SS		LUC210Z	18	1 9/16	7 3/4	1 3/4	—	(10) 0.162 x 3 1/2	(6) 0.148 x 1 1/2	845	1,020	1,155	1,250
		HU212	14	1 9/16	9		—	(10) 0.162 x 3 1/2	(6) 0.148 x 1 1/2	975	1,280	1,445	1,550
		HUS210	16	1 5/8	9	3	—	(30) 0.162 x 3 1/2	(10) 0.162 x 3 1/2	2,265	4,685	4,985	5,015
SS	DBL 2x12	LUS210-2	18	3 1/8	9	2	—	(8) 0.162 x 3 1/2	(6) 0.162 x 3 1/2	1,245	1,575	1,785	1,930
		U210-2	16	3 1/8	8 1/2	2	—	(14) 0.162 x 3 1/2	(6) 0.148 x 3	850	1,735	1,960	2,120
		LUS214-2	18	3 1/8	10 15/16	2	—	(10) 0.162 x 3 1/2	(6) 0.162 x 3 1/2	1,245	1,815	2,060	2,225
		HUS210-2	14	3 1/8	9 3/16	2	—	(8) 0.162 x 3 1/2	(8) 0.162 x 3 1/2	2,810	1,815	2,050	2,215
		HUS212-2	14	3 1/8	10 3/4	2	—	(10) 0.162 x 3 1/2	(10) 0.162 x 3 1/2	2,955	2,265	2,565	2,770
		HU212-2 / HUC212-2	14	3 1/8	10 9/16	2 1/2	Min.	(16) 0.162 x 3 1/2	(6) 0.148 x 3	975	2,050	2,315	2,475
			14	3 1/8	10 9/16	2 1/2	Max.	(22) 0.162 x 3 1/2	(10) 0.148 x 3	1,635	2,820	3,180	3,425
SS		HUCQ210-2-SDS	14	3 1/4	9	3	—	(12) 1/4 x 2 1/2 SDS	(6) 1/4 x 2 1/2 SDS	2,015	3,600	3,710	3,710
	TPL 2x12	LUS210-3	18	4 5/8	8 3/16	2	—	(8) 0.162 x 3 1/2	(6) 0.162 x 3 1/2	1,245	1,575	1,785	1,930
		HU212-3 / HUC212-3	14	4 11/16	10 5/16	2 1/2	Min.	(16) 0.162 x 3 1/2	(6) 0.148 x 3	975	2,050	2,315	2,475
			14	4 11/16	10 5/16	2 1/2	Max.	(22) 0.162 x 3 1/2	(10) 0.148 x 3	1,635	2,820	3,180	3,425
		U210-3	16	4 5/8	7 3/4	2	—	(14) 0.162 x 3 1/2	(6) 0.148 x 3	850	1,735	1,960	2,120
SS		HUCQ210-3-SDS	14	4 5/8	9	3	—	(12) 1/4 x 2 1/2 SDS	(6) 1/4 x 2 1/2 SDS	2,015	3,600	3,710	3,710

See footnotes on p. 113.

C-C-2021 ©2021 SIMPSON STRONG-TIE COMPANY INC.

Face-Mount Hangers — Solid Sawn Lumber (SPF/HF)

These products are available with additional corrosion protection. For more information, see p. 14.

SS For stainless-steel fasteners, see p. 21.

SD Many of these products are approved for installation with Strong-Drive® SD Connector screws. See pp. 348–352 for more information.

	Joist Size	Model No.	Ga.	Dimensions (in.) W	Dimensions (in.) H	Dimensions (in.) B	Min./ Max.	Fasteners (in.) Header	Fasteners (in.) Joist	SPF/HF Allowable Loads (lb.) Uplift (160)	Floor (100)	Snow (115)	Roof (125)
	Sawn Lumber Sizes												
SS	2x14	LUS210	18	1 9/16	7 13/16	1 3/4	—	(8) 0.148 x 3	(4) 0.148 x 3	1,000	1,150	1,315	1,410
		LU210	20	1 9/16	7 13/16	1 3/4	—	(10) 0.162 x 3 1/2	(6) 0.148 x 1 1/2	730	1,195	1,360	1,390
		U210	16	1 9/16	7 13/16	2	—	(10) 0.162 x 3 1/2	(6) 0.148 x 1 1/2	850	1,240	1,345	1,345
		HU214	14	1 9/16	10 1/8	2 1/4	—	(12) 0.162 x 3 1/2	(6) 0.148 x 1 1/2	975	1,540	1,735	1,860
		U214	16	1 9/16	10	2	—	(12) 0.162 x 3 1/2	(8) 0.148 x 1 1/2	850	1,490	1,680	1,815
	DBL 2x14	U210-2	16	3 1/8	8 1/2	2	—	(14) 0.162 x 3 1/2	(6) 0.148 x 3	850	1,735	1,960	2,120
		LUS214-2	18	3 1/8	10 15/16	2	—	(10) 0.162 x 3 1/2	(6) 0.162 x 3 1/2	1,245	1,815	2,060	2,225
		HUS212-2	14	3 1/8	10 3/4	2	—	(10) 0.162 x 3 1/2	(10) 0.162 x 3 1/2	2,955	2,265	2,565	2,770
		HU212-2 / HUC212-2	14	3 1/8	10 9/16	2 1/2	Min.	(16) 0.162 x 3 1/2	(6) 0.148 x 3	975	2,050	2,315	2,475
			14	3 1/8	10 9/16	2 1/2	Max.	(22) 0.162 x 3 1/2	(10) 0.148 x 3	1,635	2,820	3,180	3,425
		HU214-2 / HUC214-2	14	3 1/8	12 13/16	2 1/2	Min.	(18) 0.162 x 3 1/2	(8) 0.148 x 3	1,300	2,305	2,600	2,785
			14	3 1/8	12 13/16	2 1/2	Max.	(24) 0.162 x 3 1/2	(12) 0.148 x 3	1,965	3,075	3,470	3,735
SS		HUCQ210-2-SDS	14	3 1/4	9	3	—	(12) 1/4 x 2 1/2 SDS	(6) 1/4 x 2 1/2 SDS	2,015	3,600	3,710	3,710
	TPL 2x14	U210-3	16	4 5/8	7 3/4	2	—	(14) 0.162 x 3 1/2	(6) 0.148 x 3	850	1,735	1,960	2,120
		HU214-3 / HUC214-3	14	4 11/16	12 1/16	2 1/2	Min.	(18) 0.162 x 3 1/2	(8) 0.148 x 3	1,300	2,305	2,600	2,785
			14	4 11/16	12 1/16	2 1/2	Max.	(24) 0.162 x 3 1/2	(12) 0.148 x 3	1,735	3,075	3,470	3,735
SS		HUCQ210-3-SDS	14	4 5/8	9	3	—	(12) 1/4 x 2 1/2 SDS	(6) 1/4 x 2 1/2 SDS	2,015	3,600	3,710	3,710
	2x16	U214	16	1 9/16	10	2	—	(12) 0.162 x 3 1/2	(8) 0.148 x 1 1/2	850	1,490	1,680	1,815
		HU214	14	1 9/16	10 1/8	2 1/4	—	(12) 0.162 x 3 1/2	(6) 0.148 x 1 1/2	975	1,540	1,735	1,860
		HU216	14	1 9/16	12 15/16	2 1/4	—	(18) 0.162 x 3 1/2	(8) 0.148 x 1 1/2	1,300	2,305	2,600	2,785
	DBL 2x16	HUS212-2	14	3 1/8	10 3/4	2	—	(10) 0.162 x 3 1/2	(10) 0.162 x 3 1/2	2,955	2,265	2,565	2,770
		HU216-2 / HUC216-2	14	3 1/8	13 7/8	2 1/2	Min.	(20) 0.162 x 3 1/2	(8) 0.148 x 3	1,300	2,565	2,890	3,095
			14	3 1/8	13 7/8	2 1/2	Max.	(26) 0.162 x 3 1/2	(12) 0.148 x 3	1,735	3,330	3,760	4,045
	TPL 2x16	HU216-3 / HUC216-3	14	4 11/16	13 7/8	2 1/2	Min.	(20) 0.162 x 3 1/2	(8) 0.148 x 3	1,300	2,565	2,890	3,095
			14	4 11/16	13 7/8	2 1/2	Max.	(26) 0.162 x 3 1/2	(12) 0.148 x 3	1,735	3,330	3,760	4,045
	3x4	U34	16	2 9/16	3 3/8	2	—	(4) 0.162 x 3 1/2	(2) 0.148 x 1 1/2	205	495	560	605
		HU34 / HUC34	14	2 9/16	3 3/8	2 1/2	—	(4) 0.162 x 3 1/2	(2) 0.148 x 1 1/2	325	510	575	620
	3x6	U36	16	2 9/16	5 3/8	2	—	(8) 0.162 x 3 1/2	(4) 0.148 x 1 1/2	460	990	1,120	1,215
SS		LUS36	18	2 9/16	5 1/4	2	—	(4) 0.162 x 3 1/2	(4) 0.162 x 3 1/2	910	885	1,005	1,090
		HU36 / HUC36	14	2 9/16	5 3/8	2 1/2	—	(8) 0.162 x 3 1/2	(4) 0.148 x 1 1/2	520	1,025	1,155	1,240
	3x8	U36	16	2 9/16	5 3/8	2	—	(8) 0.162 x 3 1/2	(4) 0.148 x 1 1/2	460	990	1,120	1,215
		HU38 / HUC38	14	2 9/16	7 1/8	2 1/2	—	(10) 0.162 x 3 1/2	(4) 0.148 x 1 1/2	520	1,280	1,445	1,550
	3x10	U310	16	2 9/16	8 7/8	2	—	(14) 0.162 x 3 1/2	(6) 0.148 x 1 1/2	850	1,735	1,960	2,120
		LUS310	18	2 9/16	7 1/4	2	—	(6) 0.162 x 3 1/2	(4) 0.162 x 3 1/2	900	1,130	1,290	1,400
		HU310 / HUC310	14	2 9/16	8 7/8	2 1/2	—	(14) 0.162 x 3 1/2	(6) 0.148 x 1 1/2	780	1,795	2,020	2,165
SS		HUCQ310-SDS	14	2 9/16	9	3	—	(8) 1/4 x 2 1/2 SDS	(4) 1/4 x 2 1/2 SDS	1,160	2,685	3,085	3,320
	3x12	U310	16	2 9/16	8 7/8	2	—	(14) 0.162 x 3 1/2	(6) 0.148 x 1 1/2	850	1,735	1,960	2,120
		HU312 / HUC312	14	2 9/16	10 5/8	2 1/2	—	(16) 0.162 x 3 1/2	(6) 0.148 x 1 1/2	780	2,050	2,315	2,475
SS		HUCQ310-SDS	14	2 9/16	9	3	—	(8) 1/4 x 2 1/2 SDS	(4) 1/4 x 2 1/2 SDS	1,160	2,685	3,085	3,320
	3x14	U314	16	2 9/16	10 1/2	2	—	(16) 0.162 x 3 1/2	(6) 0.148 x 1 1/2	850	1,980	2,245	2,420
		HU314 / HUC314	14	2 9/16	12 3/8	2 1/2	—	(18) 0.162 x 3 1/2	(8) 0.148 x 1 1/2	1,300	2,305	2,600	2,785
SS		HUCQ310-SDS	14	2 9/16	9	3	—	(8) 1/4 x 2 1/2 SDS	(4) 1/4 x 2 1/2 SDS	1,160	2,685	3,085	3,320
	3x16	U314	16	2 9/16	10 1/2	2	—	(16) 0.162 x 3 1/2	(6) 0.148 x 1 1/2	850	1,980	2,245	2,420
		HU316 / HUC316	14	2 9/16	14 1/8	2 1/2	—	(20) 0.162 x 3 1/2	(8) 0.148 x 1 1/2	1,300	2,565	2,890	3,095
	4x4	LUS44	18	3 9/16	3	2	—	(4) 0.162 x 3 1/2	(2) 0.162 x 3 1/2	355	690	780	845
		U44	16	3 9/16	2 7/8	2	—	(4) 0.162 x 3 1/2	(2) 0.148 x 3	205	495	560	605
		HU44 / HUC44	14	3 9/16	2 7/8	2 1/2	—	(4) 0.162 x 3 1/2	(2) 0.148 x 3	325	510	575	620

See footnotes on p. 113.

C-C-2021 ©2021 SIMPSON STRONG-TIE COMPANY INC.

Face-Mount Hangers — Solid Sawn Lumber (SPF/HF)

These products are available with additional corrosion protection. For more information, see p. 14.

SS For stainless-steel fasteners, see p. 21.

SD Many of these products are approved for installation with Strong-Drive® SD Connector screws. See pp. 348–352 for more information.

Joist Size	Model No.	Ga.	Dimensions (in.) W	Dimensions (in.) H	Dimensions (in.) B	Min./ Max.	Fasteners (in.) Header	Fasteners (in.) Joist	SPF/HF Allowable Loads (lb.) Uplift (160)	Floor (100)	Snow (115)	Roof (125)
Sawn Lumber Sizes												
4x6	LUS46	18	3 9/16	4 3/4	2	—	(4) 0.162 x 3 1/2	(4) 0.162 x 3 1/2	910	885	1,005	1,090
	U46	16	3 9/16	4 7/8	2	—	(8) 0.162 x 3 1/2	(4) 0.148 x 3	460	990	1,120	1,215
	HUS46	14	3 9/16	5	2	—	(4) 0.162 x 3 1/2	(4) 0.162 x 3 1/2	1,000	905	1,030	1,110
	HU46 / HUC46	14	3 9/16	5 3/16	2 1/2	Min.	(8) 0.162 x 3 1/2	(4) 0.148 x 3	650	1,025	1,155	1,240
		14	3 9/16	5 3/16	2 1/2	Max.	(12) 0.162 x 3 1/2	(6) 0.148 x 3	980	1,540	1,735	1,865
4x8	LUS46	18	3 9/16	4 3/4	2	—	(4) 0.162 x 3 1/2	(4) 0.162 x 3 1/2	910	885	1,005	1,090
	U46	16	3 9/16	4 7/8	2	—	(8) 0.162 x 3 1/2	(4) 0.148 x 3	460	990	1,120	1,215
	LUS48	18	3 9/16	6 3/4	2	—	(6) 0.162 x 3 1/2	(4) 0.162 x 3 1/2	910	1,130	1,280	1,385
	HUS48	14	3 9/16	6 15/16	2	—	(6) 0.162 x 3 1/2	(6) 0.162 x 3 1/2	1,135	1,360	1,540	1,660
	HU48 / HUC48	14	3 9/16	6 13/16	2 1/2	Min.	(10) 0.162 x 3 1/2	(4) 0.148 x 3	650	1,280	1,445	1,550
		14	3 9/16	6 15/16	2 1/2	Max.	(14) 0.162 x 3 1/2	(6) 0.148 x 3	980	1,795	2,025	2,180
4x10	LUS48	18	3 9/16	6 3/4	2	—	(6) 0.162 x 3 1/2	(4) 0.162 x 3 1/2	910	1,130	1,280	1,385
	LUS410	18	3 9/16	8 3/4	2	—	(8) 0.162 x 3 1/2	(6) 0.162 x 3 1/2	1,245	1,575	1,785	1,930
	U410	16	3 9/16	8 3/8	2	—	(14) 0.162 x 3 1/2	(6) 0.148 x 3	850	1,735	1,960	2,120
	HUS410	14	3 9/16	8 15/16	2	—	(8) 0.162 x 3 1/2	(8) 0.162 x 3 1/2	2,770	1,815	2,050	2,215
	HU410 / HUC410	14	3 9/16	8 5/8	2 1/2	Min.	(14) 0.162 x 3 1/2	(6) 0.148 x 3	975	1,795	2,020	2,165
		14	3 9/16	8 5/8	2 1/2	Max.	(18) 0.162 x 3 1/2	(10) 0.148 x 3	1,635	2,305	2,605	2,800
	HUCQ410-SDS	14	3 9/16	9	3	—	(12) 1/4 x 2 1/2 SDS	(6) 1/4 x 2 1/2 SDS	1,950	3,600	3,870	3,870
4x12	LUS410	18	3 9/16	8 3/4	2	—	(8) 0.162 x 3 1/2	(6) 0.162 x 3 1/2	1,245	1,575	1,785	1,930
	LUS414	18	3 9/16	10 3/4	2	—	(10) 0.162 x 3 1/2	(6) 0.162 x 3 1/2	1,245	1,815	2,060	2,225
	U410	16	3 9/16	8 3/8	2	—	(14) 0.162 x 3 1/2	(6) 0.148 x 3	850	1,735	1,960	2,120
	HUS410	14	3 9/16	8 15/16	2	—	(8) 0.162 x 3 1/2	(8) 0.162 x 3 1/2	2,770	1,815	2,050	2,215
	HUS412	14	3 9/16	10 1/2	2	—	(10) 0.162 x 3 1/2	(10) 0.162 x 3 1/2	2,955	2,265	2,565	2,770
	HU412 / HUC412	14	3 9/16	10 5/16	2 1/2	Min.	(16) 0.162 x 3 1/2	(6) 0.148 x 3	975	2,050	2,315	2,475
		14	3 9/16	10 5/16	2 1/2	Max.	(22) 0.162 x 3 1/2	(10) 0.148 x 3	1,635	2,820	3,180	3,425
	HUCQ410-SDS	14	3 9/16	9	3	—	(12) 1/4 x 2 1/2 SDS	(6) 1/4 x 2 1/2 SDS	1,950	3,600	3,870	3,870
	HUCQ412-SDS	14	3 9/16	11	3	—	(14) 1/4 x 2 1/2 SDS	(6) 1/4 x 2 1/2 SDS	1,950	4,200	4,340	4,340
4x14	LUS410	18	3 9/16	8 3/4	2	—	(8) 0.162 x 3 1/2	(6) 0.162 x 3 1/2	1,245	1,575	1,785	1,930
	LUS414	18	3 9/16	10 3/4	2	—	(10) 0.162 x 3 1/2	(6) 0.162 x 3 1/2	1,245	1,815	2,060	2,225
	U414	16	3 9/16	10	2	—	(16) 0.162 x 3 1/2	(6) 0.148 x 3	850	1,980	2,245	2,420
	HUS412	14	3 9/16	10 1/2	2	—	(10) 0.162 x 3 1/2	(10) 0.162 x 3 1/2	2,955	2,265	2,565	2,770
	HU414 / HUC414	14	3 9/16	12 5/8	2 1/2	Min.	(18) 0.162 x 3 1/2	(8) 0.148 x 3	1,300	2,305	2,600	2,785
		14	3 9/16	12 5/8	2 1/2	Max.	(24) 0.162 x 3 1/2	(12) 0.148 x 3	1,965	3,075	3,470	3,735
	HUCQ410-SDS	14	3 9/16	9	3	—	(12) 1/4 x 2 1/2 SDS	(6) 1/4 x 2 1/2 SDS	1,950	3,600	3,870	3,870
	HUCQ412-SDS	14	3 9/16	11	3	—	(14) 1/4 x 2 1/2 SDS	(6) 1/4 x 2 1/2 SDS	1,950	4,200	4,340	4,340
4x16	U414	16	3 9/16	10	2	—	(16) 0.162 x 3 1/2	(6) 0.148 x 3	850	1,980	2,245	2,420
	HUS412	14	3 9/16	10 1/2	2	—	(10) 0.162 x 3 1/2	(10) 0.162 x 3 1/2	2,955	2,265	2,565	2,770
	HU416 / HUC416	14	3 9/16	13 5/8	2 1/2	Min.	(20) 0.162 x 3 1/2	(8) 0.148 x 3	1,300	2,565	2,890	3,095
		14	3 9/16	13 5/8	2 1/2	Max.	(26) 0.162 x 3 1/2	(12) 0.148 x 3	1,965	3,330	3,760	4,045
	HUCQ412-SDS	14	3 9/16	11	3	—	(14) 1/4 x 2 1/2 SDS	(6) 1/4 x 2 1/2 SDS	1,950	4,200	4,340	4,340
6x6	U66	16	5 1/2	5	2	—	(8) 0.162 x 3 1/2	(4) 0.148 x 3	460	990	1,120	1,215
	HU66 / HUC66	14	5 1/2	4 3/16	2 1/2	Min.	(8) 0.162 x 3 1/2	(4) 0.162 x 3 1/2	770	1,025	1,155	1,240
		14	5 1/2	4 3/16	2 1/2	Max.	(12) 0.162 x 3 1/2	(6) 0.162 x 3 1/2	1,160	1,540	1,735	1,865

See footnotes on p. 113.

C-C-2021 ©2021 SIMPSON STRONG-TIE COMPANY INC.

Face-Mount Hangers — Solid Sawn Lumber (SPF/HF)

These products are available with additional corrosion protection. For more information, see p. 14.

SS For stainless-steel fasteners, see p. 21.

SD Many of these products are approved for installation with Strong-Drive® SD Connector screws. See pp. 348–352 for more information.

Joist Size	Model No.	Ga.	Dimensions (in.) W	Dimensions (in.) H	Dimensions (in.) B	Min./ Max.	Fasteners (in.) Header	Fasteners (in.) Joist	SPF/HF Allowable Loads (lb.) Uplift (160)	Floor (100)	Snow (115)	Roof (125)
Sawn Lumber Sizes												
6x8	U66	16	5½	5	2	—	(8) 0.162 x 3½	(4) 0.148 x 3	460	990	1,120	1,215
	HU68 / HUC68	14	5½	5 13/16	2½	Min.	(10) 0.162 x 3½	(4) 0.162 x 3½	770	1,280	1,445	1,550
		14	5½	5 13/16	2½	Max.	(14) 0.162 x 3½	(6) 0.162 x 3½	1,160	1,795	2,025	2,180
6x10	U610	16	5½	8½	2	—	(14) 0.162 x 3½	(6) 0.148 x 3	850	1,735	1,960	2,120
	HU610 / HUC610	14	5½	7⅝	2½	Min.	(14) 0.162 x 3½	(6) 0.162 x 3½	1,155	1,795	2,020	2,165
		14	5½	7⅝	2½	Max.	(18) 0.162 x 3½	(8) 0.162 x 3½	1,550	2,305	2,605	2,800
	HUCQ610-SDS	14	5½	9	3	—	(12) ¼ x 2½ SDS	(6) ¼ x 2½ SDS	2,000	3,600	4,140	4,460
6X12	HU612 / HUC612	14	5½	9⅜	2½	Min.	(16) 0.162 x 3½	(6) 0.162 x 3½	1,155	2,050	2,315	2,475
		14	5½	9⅜	2½	Max.	(22) 0.162 x 3½	(8) 0.162 x 3½	1,550	2,820	3,180	3,425
	HUCQ610-SDS	14	5½	9	3	—	(12) ¼ x 2½ SDS	(6) ¼ x 2½ SDS	2,000	3,600	4,140	4,460
	HUCQ612-SDS	14	5½	11	3	—	(14) ¼ x 2½ SDS	(6) ¼ x 2½ SDS	2,000	4,200	4,460	4,460
6x14	HU614 / HUC614	14	5½	11⅝	2½	Min.	(18) 0.162 x 3½	(8) 0.162 x 3½	1,550	2,305	2,605	2,800
		14	5½	11⅝	2½	Max.	(24) 0.162 x 3½	(12) 0.162 x 3½	1,530	2,305	2,600	2,785
	HUCQ610-SDS	14	5½	9	3	—	(12) ¼ x 2½ SDS	(6) ¼ x 2½ SDS	2,000	3,600	4,140	4,460
	HUCQ612-SDS	14	5½	11	3	—	(14) ¼ x 2½ SDS	(6) ¼ x 2½ SDS	2,000	4,200	4,460	4,460
6x16	HU616 / HUC616	14	5½	12 11/16	2½	Min.	(20) 0.162 x 3½	(8) 0.162 x 3½	1,530	2,565	2,890	3095
		14	5½	12 11/16	2½	Max.	(26) 0.162 x 3½	(12) 0.162 x 3½	2,325	3,330	3,760	4,045
	HUCQ612-SDS	14	5½	11	3	—	(14) ¼ x 2½ SDS	(6) ¼ x 2½ SDS	2,000	4,200	4,460	4,460
8x8	HU88 / HUC88	14	7½	6⅝	2½	Min.	(10) 0.162 x 3½	(4) 0.162 x 3½	770	1,280	1,445	1,550
		14	7½	6⅝	2½	Max.	(14) 0.162 x 3½	(6) 0.162 x 3½	1,160	1,795	2,025	2,180
8x10	HU810 / HUC810	14	7½	8⅜	2½	Min.	(14) 0.162 x 3½	(6) 0.162 x 3½	1,155	1,795	2,020	2,165
		14	7½	8⅜	2½	Max.	(18) 0.162 x 3½	(8) 0.162 x 3½	1,550	2,305	2,605	2,800
8x12	HU812 / HUC812	14	7½	10⅛	2½	Min.	(16) 0.162 x 3½	(6) 0.162 x 3½	1,155	2,050	2,315	2,475
		14	7½	10⅛	2½	Max.	(22) 0.162 x 3½	(8) 0.162 x 3½	1,550	2,820	3,180	3,425
8x14	HU814 / HUC814	14	7½	11⅞	2½	Min.	(18) 0.162 x 3½	(8) 0.162 x 3½	1,530	2,305	2,600	2,785
		14	7½	11⅞	2½	Max.	(24) 0.162 x 3½	(12) 0.162 x 3½	2,325	3,075	3,470	3,735
8x16	HU816 / HUC816	14	7½	13⅝	2½	Min.	(20) 0.162 x 3½	(8) 0.162 x 3½	1,530	2,565	2,890	3095
		14	7½	13⅝	2½	Max.	(26) 0.162 x 3½	(12) 0.162 x 3½	2,325	3,330	3,760	4,045

1. Uplift loads have been increased for earthquake or wind loading with no further increase allowed. Reduce where other loads govern.
2. For minimum nailing quantity and load values, fill all round holes; for maximum nailing quantity and load values, fill all round and triangular holes.
3. DF/SP loads can be used for SCL with an equivalent specific gravity of 0.50 or greater.
4. Truss chord cross-grain tension may limit allowable loads in accordance with ANSI/TPI 1-2014. Simpson Strong-Tie® Connector Selector® software includes the evaluation of cross-grain tension in its hanger allowable loads. For additional information, contact Simpson Strong-Tie.
5. **Fasteners:** Nail dimensions are listed diameter by length. See pp. 21–22 for fastener information.

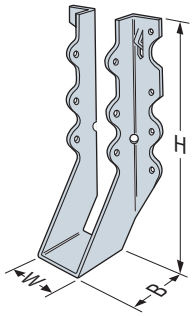

C-C-2021 ©2021 SIMPSON STRONG-TIE COMPANY INC.

Face-Mount Hangers — Rough Lumber (DF/SP)

SD Many of these products are approved for installation with Strong-Drive® SD Connector screws. See pp. 348–352 for more information.

Codes: See p. 11 for Code Reference Key Chart

Joist Size	Model No.	Ga.	Dimensions (in.)			Fasteners (in.)		DF/SP Allowable Loads (lb.)				Code Ref.
			W	H	B	Header	Joist	Uplift (160)	Floor (100)	Snow (115)	Roof (125)	
Sawn Lumber Sizes												
2x4(R)	LU24R-18	18	2	3 11/16	1 1/2	(4) 0.162 x 3 1/2	(2) 0.148 x 1 1/2	240	555	630	655	—
	U24R	16	2	3 5/8	2	(4) 0.162 x 3 1/2	(2) 0.148 x 1 1/2	240	575	650	705	IBC, FL, LA
2x6(R)	LU26R-18	18	2	4 9/16	1 1/2	(6) 0.162 x 3 1/2	(4) 0.148 x 1 1/2	540	835	950	1,030	—
	U26R	16	2	5 5/8	2	(8) 0.162 x 3 1/2	(4) 0.148 x 1 1/2	535	1,150	1,305	1,410	IBC, FL, LA
2x8(R)	LU28R-18	18	2	6 5/8	1 1/2	(8) 0.162 x 3 1/2	(6) 0.148 x 1 1/2	850	1,110	1,180	1,180	—
	U26R	16	2	5 5/8	2	(8) 0.162 x 3 1/2	(4) 0.148 x 1 1/2	535	1,150	1,305	1,410	IBC, FL, LA
2x10(R)	LU210R-18	18	2	7 9/16	2	(10) 0.162 x 3 1/2	(6) 0.148 x 1 1/2	850	1,390	1,580	1,615	—
	U210R	16	2	9 1/8	2	(14) 0.162 x 3 1/2	(6) 0.148 x 1 1/2	990	2,015	2,280	2,465	IBC, FL, LA
2x12(R)	U210R	16	2	9 1/8	2	(14) 0.162 x 3 1/2	(6) 0.148 x 1 1/2	990	2,015	2,280	2,465	
2x14(R)	U210R	16	2	9 1/8	2	(14) 0.162 x 3 1/2	(6) 0.148 x 1 1/2	990	2,015	2,280	2,465	
4x4(R)	U44R	16	4	2 5/8	2	(4) 0.162 x 3 1/2	(2) 0.162 x 3 1/2	240	575	650	705	
4x6(R)	U46R	16	4	4 5/8	2	(8) 0.162 x 3 1/2	(4) 0.162 x 3 1/2	535	1,150	1,305	1,410	
4x8(R)	U46R	16	4	4 5/8	2	(8) 0.162 x 3 1/2	(4) 0.162 x 3 1/2	535	1,150	1,305	1,410	
4x10(R)	U410R	16	4	8 1/8	2	(14) 0.162 x 3 1/2	(6) 0.162 x 3 1/2	990	2,015	2,280	2,465	
4x12(R)	U410R	16	4	8 1/8	2	(14) 0.162 x 3 1/2	(6) 0.162 x 3 1/2	990	2,015	2,280	2,465	
4x14(R)	U410R	16	4	8 1/8	2	(14) 0.162 x 3 1/2	(6) 0.162 x 3 1/2	990	2,015	2,280	2,465	
6x6(R)	U66R	16	6	5	2	(8) 0.162 x 3 1/2	(4) 0.162 x 3 1/2	535	1,150	1,305	1,410	
6x8(R)	U66R	16	6	5	2	(8) 0.162 x 3 1/2	(4) 0.162 x 3 1/2	535	1,150	1,305	1,410	
6x10(R)	U610R	16	6	8 1/2	2	(14) 0.162 x 3 1/2	(6) 0.162 x 3 1/2	990	2,015	2,280	2,465	
6x12(R)	U610R	16	6	8 1/2	2	(14) 0.162 x 3 1/2	(6) 0.162 x 3 1/2	990	2,015	2,280	2,465	
6x14(R)	U610R	16	6	8 1/2	2	(14) 0.162 x 3 1/2	(6) 0.162 x 3 1/2	990	2,015	2,280	2,465	

1. Uplift loads have been increased for earthquake or wind loading with no further increase allowed. Reduce where other loads govern.
2. DF/SP loads can be used for SCL with an equivalent specific gravity of 0.50 or greater.
3. HU hangers can be ordered in rough sizes at full table loads. Add "X" to the model designation (e.g., HU28X) and specify rough width or height. Maximum width 8".
4. **Fasteners:** Nail dimensions are listed diameter by length. See pp. 21–22 for fastener information.

Face-Mount Hangers — Rough Lumber (SPF/HF)

Joist Size	Model No.	Ga.	Dimensions (in.)			Fasteners (in.)		SPF/HF Allowable Loads (lb.)			
			W	H	B	Header	Joist	Uplift (160)	Floor (100)	Snow (115)	Roof (125)
Sawn Lumber Sizes											
2x4(R)	LU24R-18	18	2	3 11/16	1 1/2	(4) 0.162 x 3 1/2	(2) 0.148 x 1 1/2	205	475	540	565
	U24R	16	2	3 5/8	2	(4) 0.162 x 3 1/2	(2) 0.148 x 1 1/2	205	495	560	605
2x6(R)	LU26R-18	18	2	4 9/16	1 1/2	(6) 0.162 x 3 1/2	(4) 0.148 x 1 1/2	465	720	815	885
	U26R	16	2	5 5/8	2	(8) 0.162 x 3 1/2	(4) 0.148 x 1 1/2	460	990	1,120	1,215
2x8(R)	LU28R-18	18	2	6 3/8	1 1/2	(8) 0.162 x 3 1/2	(6) 0.148 x 1 1/2	730	955	1,015	1,015
	U26R	16	2	5 5/8	2	(8) 0.162 x 3 1/2	(4) 0.148 x 1 1/2	460	990	1,120	1,215
2x10(R)	LU210R-18	18	2	7 9/16	2	(10) 0.162 x 3 1/2	(6) 0.148 x 1 1/2	730	1,195	1,360	1,390
	U210R	16	2	9 1/8	2	(14) 0.162 x 3 1/2	(6) 0.148 x 1 1/2	850	1,735	1,960	2,120
2x12(R)	U210R	16	2	9 1/8	2	(14) 0.162 x 3 1/2	(6) 0.148 x 1 1/2	850	1,735	1,960	2,120
2x14(R)	U210R	16	2	9 1/8	2	(14) 0.162 x 3 1/2	(6) 0.148 x 1 1/2	850	1,735	1,960	2,120
4x4(R)	U44R	16	4	2 5/8	2	(4) 0.162 x 3 1/2	(2) 0.162 x 3 1/2	205	495	560	605
4x6(R)	U46R	16	4	4 5/8	2	(8) 0.162 x 3 1/2	(4) 0.162 x 3 1/2	460	990	1,120	1,215
4x8(R)	U46R	16	4	4 5/8	2	(8) 0.162 x 3 1/2	(4) 0.162 x 3 1/2	460	990	1,120	1,215
4x10(R)	U410R	16	4	8 1/8	2	(14) 0.162 x 3 1/2	(6) 0.162 x 3 1/2	850	1,735	1,960	2,120
4x12(R)	U410R	16	4	8 1/8	2	(14) 0.162 x 3 1/2	(6) 0.162 x 3 1/2	850	1,735	1,960	2,120
4x14(R)	U410R	16	4	8 1/8	2	(14) 0.162 x 3 1/2	(6) 0.162 x 3 1/2	850	1,735	1,960	2,120
6x6(R)	U66R	16	6	5	2	(8) 0.162 x 3 1/2	(4) 0.162 x 3 1/2	460	990	1,120	1,215
6x8(R)	U66R	16	6	5	2	(8) 0.162 x 3 1/2	(4) 0.162 x 3 1/2	460	990	1,120	1,215
6x10(R)	U610R	16	6	8 1/2	2	(14) 0.162 x 3 1/2	(6) 0.162 x 3 1/2	850	1,735	1,960	2,120
6x12(R)	U610R	16	6	8 1/2	2	(14) 0.162 x 3 1/2	(6) 0.162 x 3 1/2	850	1,735	1,960	2,120
6x14(R)	U610R	16	6	8 1/2	2	(14) 0.162 x 3 1/2	(6) 0.162 x 3 1/2	850	1,735	1,960	2,120

1. Uplift loads have been increased for earthquake or wind loading with no further increase allowed. Reduce where other loads govern.
2. DF/SP loads can be used for SCL with an equivalent specific gravity of 0.50 or greater.
3. HU hangers can be ordered in rough sizes at full table loads. Add "X" to the model designation (e.g., HU28X) and specify rough width or height. Maximum width 8".
4. **Fasteners:** Nail dimensions are listed diameter by length. See pp. 21–22 for fastener information.

C-C-2021 ©2021 SIMPSON STRONG-TIE COMPANY INC.

LRUZ

Face-Mount Rafter Hanger

The LRUZ offers an economic alternative for those applications requiring a sloped hanger for rafter-to-ridge connections. Used with solid sawn rafters, the LRUZ's unique design enables the hanger to be installed either before or after the rafter is in place. The field-adjustable seat helps improve job efficiency by eliminating mismatched angles in the field and lead times associated with special orders. The LRUZ offers comparable or better load capacity to other rafter hangers at a reduced cost while using fewer fasteners.

Features:

- The open design and ability to field-adjust the slope make the LRUZ ideal for both retrofit or new applications.
- May be sloped down from 0° (0:12 pitch) to 49° (14:12). For slopes greater than 45°, allowable downloads are 0.85 of table loads.
- May be sloped up from 0° to 45°.
- For added versatility, the fasteners on the face of the hanger are placed high enabling the bottom of the rafter to hang below the ridge beam (see "Max. C_1" dimension).
- Can be installed using nails or Strong-Drive® SD Connector screws.

Material: 18 gauge

Finish: ZMAX® coating

Installation:

- Use all specified fasteners; see General Notes
- Joist fasteners must be installed at an angle through the rafter or joist into the header to achieve the table loads
- See alternate installation on p. 116 for retrofit applications

Codes: See p. 11 for Code Reference Key Chart

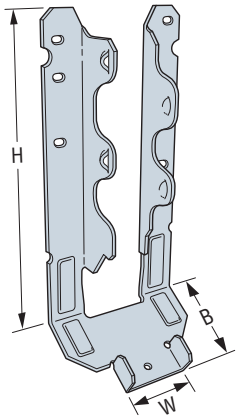

LRU28Z
(other models similar)

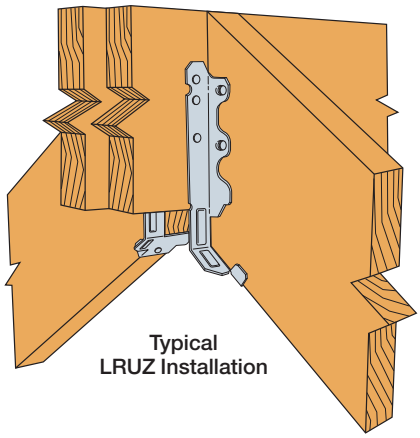

Typical LRUZ Installation

Double-Shear Nailing Top View

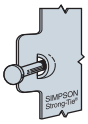

Dome Double-Shear Nailing Side View

These products are available with additional corrosion protection. For more information, see p. 14.

SD Many of these products are approved for installation with Strong-Drive® SD Connector screws. See pp. 348–352 for more information.

Standard Installation

Model No.	Dimensions (in.)				Fasteners (in.)		DF/SP Allowable Loads				SPF/HF Allowable Loads				Code Ref.
	W	H	B	Max. C_1	Face	Joist	Uplift (160)	Floor (100)	Snow (115)	Roof (125)	Uplift (160)	Floor (100)	Snow (115)	Roof (125)	
LRU26Z	1 9/16	5 1/4	1 15/16	1 3/4	(4) 0.162 x 3 1/2	(5) 0.162 x 3 1/2	810	1,030	1,175	1,275	695	885	1,010	1,095	IBC, FL, LA
					(4) 0.148 x 3	(5) 0.148 x 3	600	865	990	990	515	745	850	850	
					(4) #10 x 2 1/2" SD	(5) #10 x 2 1/2" SD	770	1,215	1,395	1,425	660	935	1,075	1,170	
					(4) #10 x 1 1/2" SD	(5) #10 x 2 1/2" SD	770	1,045	1,200	1,305	660	830	950	1,035	
LRU28Z	1 9/16	6 15/16	1 15/16	2 5/8	(6) 0.162 x 3 1/2	(5) 0.162 x 3 1/2	810	1,315	1,340	1,340	695	1,130	1,150	1,150	
					(6) 0.148 x 3	(5) 0.148 x 3	805	1,050	1,050	1,050	690	905	905	905	
					(6) #10 x 2 1/2" SD	(5) #10 x 2 1/2" SD	1,025	1,480	1,480	1,480	880	1,265	1,270	1,270	
					(6) #10 x 1 1/2" SD	(5) #10 x 2 1/2" SD	1,025	1,390	1,480	1,480	880	1,105	1,270	1,270	
LRU210Z	1 9/16	8 3/16	1 15/16	1 3/4	(6) 0.162 x 3 1/2	(7) 0.162 x 3 1/2	1,015	1,550	1,620	1,620	875	1,335	1,395	1,395	
					(6) 0.148 x 3	(7) 0.148 x 3	1,015	1,295	1,480	1,495	875	1,115	1,275	1,285	
					(6) #10 x 2 1/2" SD	(7) #10 x 2 1/2" SD	1,510	1,805	1,805	1,805	1,300	1,405	1,550	1,550	
					(6) #10 x 1 1/2" SD	(7) #10 x 2 1/2" SD	1,510	1,570	1,805	1,805	1,300	1,240	1,430	1,550	
LRU212Z	1 9/16	10 11/16	1 15/16	3 1/2	(6) 0.162 x 3 1/2	(7) 0.162 x 3 1/2	1,305	1,550	1,765	1,910	1,120	1,335	1,520	1,645	
					(6) 0.148 x 3	(7) 0.148 x 3	1,305	1,295	1,430	1,430	1120	1,115	1,230	1,230	
					(6) #10 x 2 1/2" SD	(7) #10 x 2 1/2" SD	1,850	1,820	1,915	1,915	1,590	1,405	1,615	1,645	
					(6) #10 x 1 1/2" SD	(7) #10 x 2 1/2" SD	1,850	1,570	1,805	1,915	1,590	1,240	1,430	1,555	

1. Uplift loads have been increased for earthquake or wind loading with no further increase allowed. Reduce where other loads govern.
2. Allowable loads are based on a minimum 3" carrying member. For single 2x carrying members, use 0.148" x 1 1/2" nails in the face and 0.148" x 3" in the joist, and reduce the allowable load to 0.81 of the tabulated value for 0.148" x 3" nails. Alternatively, use #10 x 1 1/2" Strong-Drive® SD Connector screws in the face and #10 x 2 1/2" SD Connector screws in the joist as shown in the table.
3. **Fasteners:** Nail dimensions are listed diameter by length. SD screws are Simpson Strong-Tie® Strong-Drive® SD Connector screws. See pp. 21–22 for fastener information.

C-C-2021 ©2021 SIMPSON STRONG-TIE COMPANY INC.

Face-Mount Rafter Hanger (cont.)

Alternate Installation for Retrofit Applications

When an existing roof deck prevents the horizontal installation of fasteners, #10 x 2½" Strong-Drive® SD Connector screws may be installed sloped upward to match the roof pitch (49° max.). Use table values for an installation with 0.148" x 3" nails when Strong-Drive SD Connector screws are sloped. Nails may not be installed sloped upward.

Alternate Installation for Retrofit

Model No.	Angled Fasteners		DF/SP Allowable Loads				SPF/HF Allowable Loads				Code Ref.
	Face	Joist	Uplift[2] (160)	Floor (100)	Snow (115)	Roof (125)	Uplift[2] (160)	Floor (100)	Snow (115)	Roof (125)	
LRU26Z	(4) #10 x 2½" SD	(5) #10 x 2½" SD	645	855	980	990	555	730	835	850	IBC, FL, LA
LRU28Z	(6) #10 x 2½" SD	(5) #10 x 2½" SD	805	1,050	1,050	1,050	695	900	900	900	
LRU210Z	(6) #10 x 2½" SD	(7) #10 x 2½" SD	1,100	1,285	1,430	1,430	945	1,095	1,230	1,230	
LRU212Z	(6) #10 x 2½" SD	(7) #10 x 2½" SD	1,305	1,285	1,430	1,430	1,120	1,095	1,230	1,230	

1. Uplift loads have been increased for earthquake or wind loading with no further increase allowed. Reduce where other loads govern.
2. Allowable loads are based on a minimum 3"-thick carrying member.
3. Fasteners may be angled upward a maximum of 49°.
4. **Fasteners:** SD screws are Simpson Strong-Tie® Strong-Drive SD Connector screws. See pp. 21–22 for fastener information.

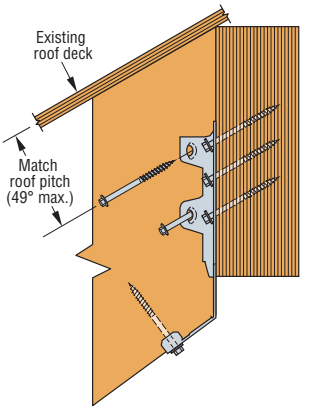

Alternate Installation for Retrofit Applications

Minimum Ridge Beam Depth (in.)

Roof Pitch	LRU26Z		LRU28Z			LRU210Z			LRU212Z	
	Rafter Size		Rafter Size			Rafter Size			Rafter Size	
	2x6	2x8	2x6	2x8	2x10	2x8	2x10	2x12	2x10	2x12
2:12	4⅛	5⅞	—	5	7	—	7⅞	9⅞	—	8⅛
3:12	4¼	6	—	5⅛	7⅛	—	8	10⅛	—	8⅜
4:12	4⅜	6⅛	—	5¼	7⅜	—	8¼	10⅜	—	8⅝
5:12	4½	6⅜	—	5½	7⅝	—	8½	10¾	—	9
6:12	4⅝	6⅝	—	5¾	8	—	8⅞	11⅛	—	9⅜
7:12	4⅞	6⅞	—	6	8⅜	6⅞	9¼	11½	7½	9¾
8:12	5⅛	7¼	—	6⅜	8¾	7¼	9⅝	12	7⅞	10¼
9:12	5⅜	7⅝	—	6¾	9¼	7⅝	10⅛	12⅝	8⅜	10⅞
10:12	5⅝	8	4¾	7⅛	9¾	8	10⅝	13⅛	8⅞	11⅜
11:12	6	8⅜	5⅛	7½	10¼	8⅜	11⅛	13¾	9⅜	12
12:12	6¼	8¾	5⅜	7⅞	10¾	8¾	11⅝	14⅜	9⅞	12⅝
13:12	6⅝	9¼	5¾	8⅜	11¼	9¼	12⅛	15⅛	10⅜	13⅜
14:12	7	9⅝	6⅛	8¾	11⅞	9⅝	12¾	15¾	11	14

1. Minimum ridge beam depths shown assume that the rafter and the ridge beam are flush at the top.
2. Minimum ridge beam depths have been determined to ensure the maximum C_1 dimension for the LRU is not exceeded. Deeper ridge beams may be required to support the rafter loads as determined by the designer.
3. Per the 2012/2015/2018/2021 IRC Section R802.3 the ridge is required to be not less in depth than the cut end of the rafter unless the ridge is designed as a beam.
4. Slopes greater than 12:12 are download only.

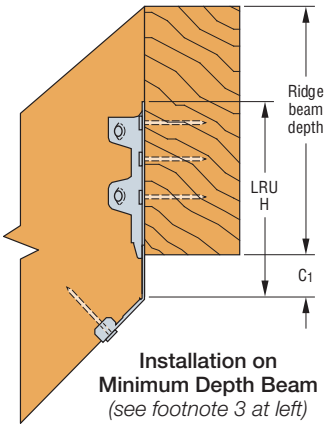

Installation on Minimum Depth Beam
(see footnote 3 at left)

C-C-2021 ©2021 SIMPSON STRONG-TIE COMPANY INC.

LSSJ

Face-Mount Adjustable Light Slopeable/Skewable Jack Hanger

This product is preferable to similar connectors because of (a) easier installation, (b) higher loads, (c) lower installed cost, or a combination of these features.

The innovative LSSJ is ideal for connecting jack rafters to hip members. Featuring a one-sided connection point for ease of installation and a versatile, hinged seat, the LSSJ is easily field adjustable to all typical rafter slopes ranging from 0:12 to 12:12. The LSSJ's header flange allows for easy skew adjustment, from 0° to 45°. It ships pre-bent at 45° so is ready to place for most typical applications. Specify left (L) or right (R) model when ordering.

Features:

- Hanger installs from one side with all fastener holes easily accessible
- Can be installed as a retrofit
- Seat grip makes setting the hanger quick and easy
- Accommodates roof pitches from 0:12 to 12:12
- Swivel seat adjusts easily and provides more support to joist, allowing for a higher load than fasteners alone

Material: 18 gauge

Finish: ZMAX® coating

Installation:

- Use all specified fasteners; see General Notes
- For LSSJ26 an extra nail in the seat at load durations (115) and (125) adds 75 lb. to the 0.148" x 1½" nails table downloads
- Joist end needs to be bevel cut
- Table and illustration shows left and right skews LSSJR/L (LSSJR = skewed right; LSSJL = skewed left)

Codes: See p. 11 for Code Reference Key Chart

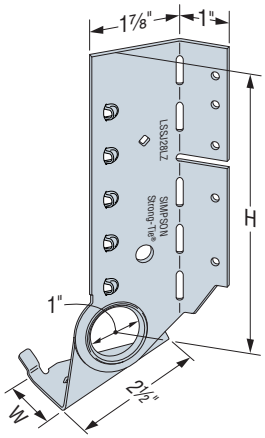

LSSJ28LZ
(others similar)
US Patent Pending

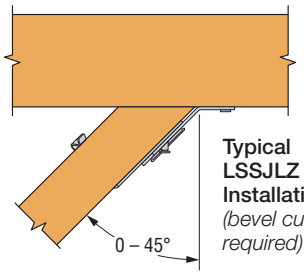

Typical LSSJLZ Installation
(bevel cut required)

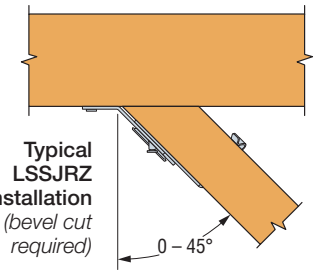

Typical LSSJRZ Installation
(bevel cut required)

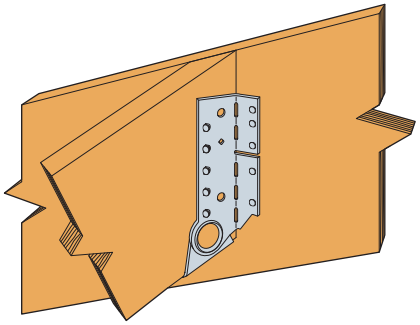

Typical LSSJ28LZ Installation with 2x10 Header
(installation with 4x10 header similar)

These products are available with additional corrosion protection. For more information, see p. 14.

Model No.	Dimensions (in.)		Fasteners (in.)		DF/SP Allowable Loads				HF/SPF Allowable Loads				Code Ref.
	W	H	Face	Joist	Uplift (160)	Floor (100)	Snow (115)	Roof (125)	Uplift (160)	Floor (100)	Snow (115)	Roof (125)	
0°–20° Skew													
LSSJ26LZ LSSJ26RZ	1 9/16	4 3/8	(4) 0.148 x 3	(4) 0.148 x 3	295	365	365	365	255	315	315	315	IBC, FL, LA
			(4) 0.148 x 1½	(4) 0.148 x 1½									
LSSJ28LZ LSSJ28RZ	1 9/16	6	(5) 0.148 x 3	(5) 0.148 x 3	450	590	605	605	385	510	520	520	
			(5) 0.148 x 1½	(5) 0.148 x 1½									
LSSJ210LZ LSSJ210RZ	1 9/16	8	(6) 0.148 x 3	(6) 0.148 x 3	795	710	810	815	685	610	695	700	
			(6) 0.148 x 1½	(6) 0.148 x 1½									
21°–45° Skew													
LSSJ26LZ LSSJ26RZ	1 9/16	4 3/8	(4) 0.148 x 3	(4) 0.148 x 3	750	750	750	750	645	645	645	645	IBC, FL, LA
			(4) 0.148 x 1½	(4) 0.148 x 1½	295	420	420	420	255	360	360	360	
LSSJ28LZ LSSJ28RZ	1 9/16	6	(5) 0.148 x 3	(5) 0.148 x 3	1,165	1,080	1,165	1,165	1,000	925	1,000	1,000	
			(5) 0.148 x 1½	(5) 0.148 x 1½	450	590	675	725	385	510	580	625	
LSSJ210LZ LSSJ210RZ	1 9/16	8	(6) 0.148 x 3	(6) 0.148 x 3	1,420	1,295	1,445	1,445	1,220	1,110	1,245	1,245	
			(6) 0.148 x 1½	(6) 0.148 x 1½	795	710	810	815	685	610	695	700	

1. Uplift loads have been increased for earthquake or wind loading with no further increase allowed. Reduce where other loads govern.
2. **Fasteners:** Nail dimensions are listed diameter by length. See pp. 21–22 for fastener information.

C-C-2021 ©2021 SIMPSON STRONG-TIE COMPANY INC.

LSSR

Slopeable/Skewable Rafter Hanger

The patent-pending LSSR light slopeable/skewable rafter hanger is the next generation of field-adjustable rafter hangers. One of its key features is that it can be installed after the rafter has been tacked into place. A versatile hanger, it is field adjustable for skews up to 45° and features an innovative hinged swivel seat which adjusts up to a 45° slope. New models are now available for 2x lumber.

Features:

- Makes it possible to install after the rafters are already in place
- Flange design allows for easy skew adjustment, from 0° to 45°
- Swivel seat adjusts easily from 0° to 45° up or down

Material: See table

Finish: ZMAX® coating

Installation:

- Use all specified fasteners; see General Notes
- Limit on-center spacing of rafters and joists with LSSR210-2Z and LSSR410Z to 14" o.c. minimum; for the LSSR26Z, LSSR28Z and LSSR210Z, limit on-center spacing to 8" o.c. minimum.
- For a common rafter:
  - Slide hanger into position; adjust seat and install seat nails
  - Make sure side stirrups are snug close to the joist, bend lines are plumb
  - Install a face nail on each side to hold in place
  - Install all round and obround holes on the header and joist
- For jack rafters:
  - Fold acute side forward
  - Slide hanger into position; adjust seat and install seat nails
  - Make sure hanger is snug close to the joist, bend line is plumb
  - Install obround nails on acute side, both header and joist
  - Make sure hanger is snug close to the joist and header; bend line is plumb
  - Install joist nails on obtuse side
  - Bend obtuse side flange back so that header flange is flush against header
  - Install header nails

Codes: See p. 11 for Code Reference Key Chart

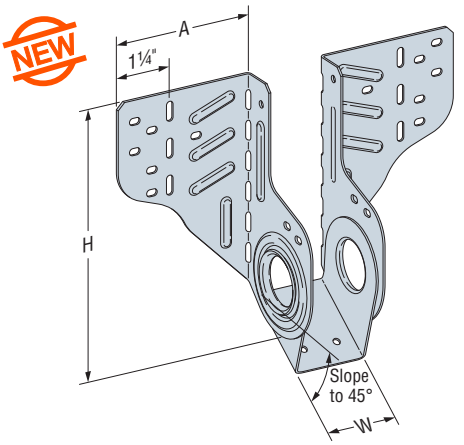

LSSR26Z

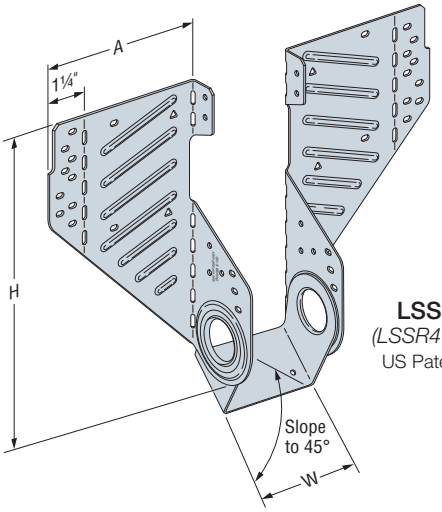

LSSR210-2
(LSSR410Z similar)
US Patent Pending

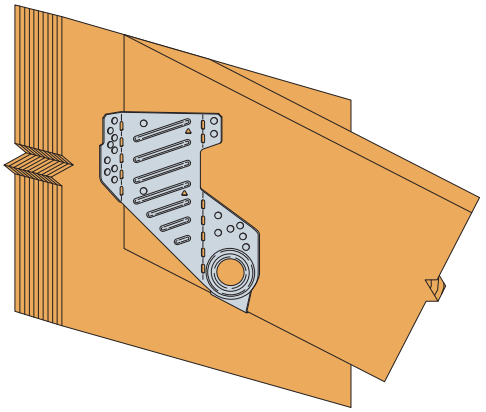

Typical Sloped and Skewed LSSR Installation

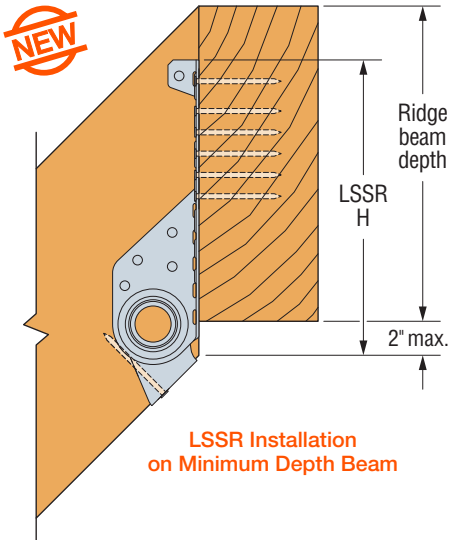

LSSR Installation on Minimum Depth Beam

For more information and to watch an installation video, go to **strongtie.com/lssr**.

C-C-2021 ©2021 SIMPSON STRONG-TIE COMPANY INC.

Slopeable/Skewable Rafter Hanger (cont.)

These products are available with additional corrosion protection. For more information, see p. 14.

Actual Joist Width (in.)	Model No.	Ga.	Dimensions (in.) W	Dimensions (in.) H	Dimensions (in.) A	Fasteners (in.) Face	Fasteners (in.) Joist	Allowable Loads DF/SP Species Header Uplift (160)	DF/SP Floor (100)	DF/SP Roof Snow (115)	DF/SP Roof Const. (125)	SPF/HF Species Header Uplift (160)	SPF/HF Floor (100)	SPF/HF Roof Snow (115)	SPF/HF Roof Const. (125)	Code Ref.
Sloped Only Hangers																
1½	LSSR26Z	18	1 9/16	5 3/8	2½	(12) 0.148 x 2½	(8) 0.148 x 1½	460	1,065	1,065	1,065	395	915	915	915	IBC, FL, LA
1½	LSSR28Z	18	1 9/16	7 1/8	2½	(14) 0.148 x 2½	(10) 0.148 x 1½	785	1,405	1,405	1,405	675	1,210	1,210	1,210	IBC, FL, LA
1½	LSSR210Z	18	1 9/16	9 1/8	2½	(14) 0.148 x 2½	(10) 0.148 x 1½	785	1,405	1,405	1,405	675	1,210	1,210	1,210	IBC, FL, LA
3	LSSR210-2Z	16	3 1/8	8 15/16	5 1/8	(22) 0.162 x 2½	(18) 0.162 x 2½	695	2,365	2,365	2,365	600	2,035	2,035	2,035	IBC, FL, LA
3½	LSSR410Z	16	3 5/8	8 15/16	5 1/8	(22) 0.162 x 2½	(18) 0.162 x 2½	695	2,365	2,365	2,365	600	2,035	2,035	2,035	IBC, FL, LA
Skewed Hangers or Sloped and Skewed Hangers																
1½	LSSR26Z	18	1 9/16	5 3/8	2½	(11) 0.148 x 2½	(7) 0.148 x 1½	460	760	760	760	395	655	655	655	IBC, FL, LA
1½	LSSR28Z	18	1 9/16	7 1/8	2½	(13) 0.148 x 2½	(8) 0.148 x 1½	785	925	925	925	675	795	795	795	IBC, FL, LA
1½	LSSR210Z	18	1 9/16	9 1/8	2½	(13) 0.148 x 2½	(8) 0.148 x 1½	785	1,150	1,150	1,150	675	990	990	990	IBC, FL, LA
3	LSSR210-2Z	16	3 1/8	8 15/16	5 1/8	(20) 0.162 x 2½	(13) 0.162 x 2½	695	1,810	1,810	1,810	600	1,555	1,555	1,555	IBC, FL, LA
3½	LSSR410Z	16	3 5/8	8 15/16	5 1/8	(20) 0.162 x 2½	(13) 0.162 x 2½	695	1,810	1,810	1,810	600	1,555	1,555	1,555	IBC, FL, LA

1. Uplift loads have been increased for earthquake or wind loading with no further increase allowed. Reduce where other loads govern.
2. For slope-only installations, the four triangle holes may be filled for an allowable roof download of 3,015 lb. for DF/SP and 2,595 lb. for SPF/HF for LSSR 16GA.
3. Roof loads are 125% of floor loads unless limited by other criteria. Floor loads may be adjusted for load durations according to the code provided they do not exceed those in the roof column.
4. On the acute side of the skewed LSSR hanger, fill obround holes only.
5. **Fasteners:** Nail dimensions are listed diameter by length. See pp. 21–22 for fastener information.

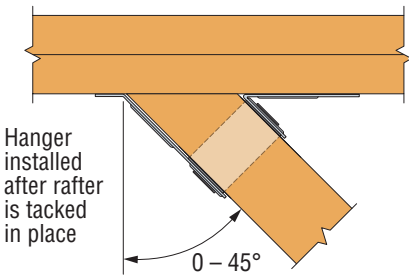

Typical LSSR Installation
(compound miter cut)

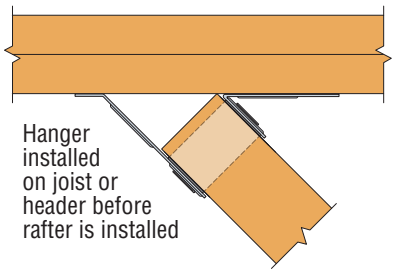

Alternate LSSR Installation
(plumb cut)

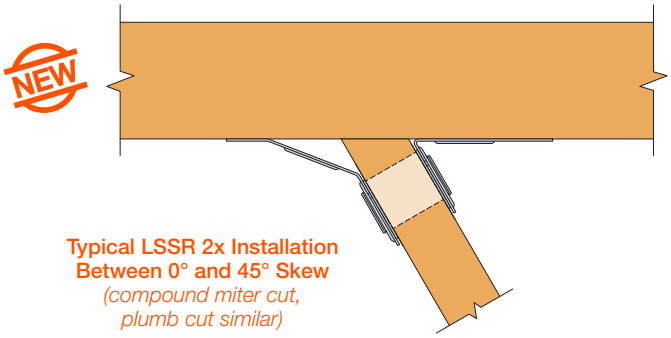

Typical LSSR 2x Installation Between 0° and 45° Skew
(compound miter cut, plumb cut similar)

C-C-2021 ©2021 SIMPSON STRONG-TIE COMPANY INC.

SUR/SUL/HSUR/HSUL

Skewed 45° Face-Mount Hangers

This product is preferable to similar connectors because of (a) easier installation, (b) higher loads, (c) lower installed cost, or a combination of these features.

The SU and HSU series of hangers are skewed 45° left or right. Angled nail slots direct nails for proper installation.

Material: SUR and SUL — 16 gauge; HSUR and HSUL — 14 gauge

Finish: Galvanized. Some products available in ZMAX® coating. See Corrosion Information, pp. 12–15.

Installation:

- Use all specified fasteners; see General Notes
- These hangers will normally accommodate a 40° to 50° skew
- Illustration shows left and right skews SUR/L (SUR = skewed right; SUL = skewed left)
- The joist end may be square cut or bevel cut

Options:

- Available with the A_2 flange turned in on the 2-2x and 4x models only (see illustration)
- To order, add "C" (for concealed) to the product name
- For example, specify HSURC46, HSULC46, SURC46, or SULC46

Codes: See p. 11 for Code Reference Key Chart

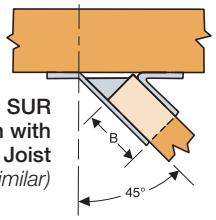

Typical SUR Installation with Square Cut Joist *(HSUR similar)*

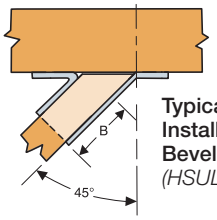

Typical SUL Installation with Bevel Cut Joist *(HSUL similar)*

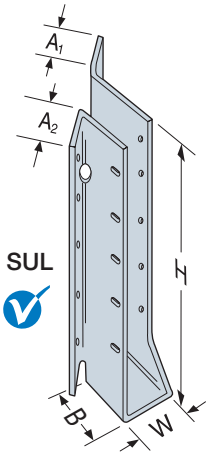

SUL

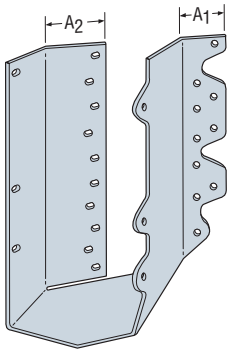

HSULC
Available for 2-2x and 4x models only

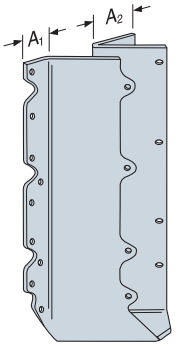

HSUR

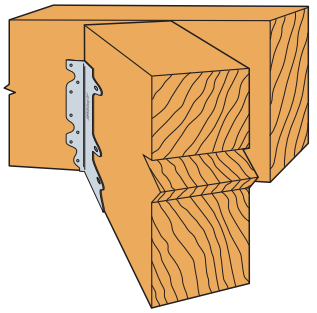

Typical SUR410 Installation

These products are available with additional corrosion protection. For more information, see p. 14.

SS For stainless-steel fasteners, see p. 21.

SD Many of these products are approved for installation with Strong-Drive® SD Connector screws. See pp. 348–352 for more information.

Joist Size	Model No.	Dimensions (in.)					Fasteners (in.)		DF/SP Species Header Allowable Loads				SPF/HF Species Header Allowable Loads				Code Ref.
		W	H	B	A_1	A_2	Face	Joist	Uplift (160)	Floor (100)	Snow (115)	Roof (125)	Uplift (160)	Floor (100)	Snow (115)	Roof (125)	
2x4	SUR/L24	1 9/16	3 1/2	2	1 1/8	1 1/4	(4) 0.162 x 3 1/2	(4) 0.148 x 1 1/2	395	575	650	705	340	495	560	605	IBC, FL, LA
SS 2x6, x8	SUR/L26	1 9/16	5	2	1 1/8	1 5/16	(6) 0.162 x 3 1/2	(6) 0.148 x 1 1/2	675	865	980	1,055	580	745	845	905	
SS 2x10, x12	SUR/L210	1 9/16	8 3/16	2	1 1/8	1 5/16	(10) 0.162 x 3 1/2	(10) 0.148 x 1 1/2	1,250	1,440	1,630	1,760	1,075	1,240	1,400	1,515	
2x14	SUR/L214	1 9/16	10	2	1 1/8	1 5/16	(12) 0.162 x 3 1/2	(12) 0.148 x 1 1/2	1,890	1,730	1,955	2,110	1,625	1,490	1,680	1,815	
3x10, x12	SUR/L2.56 /9	2 9/16	8 13/16	3 3/16	1 1/8	2 1/8	(14) 0.162 x 3 1/2	(2) 0.148 x 1 1/2	210	2,015	2,280	2,465	180	1,735	1,960	2,120	
3x14	SUR/L2.56 /11	2 9/16	11 3/16	3 3/16	1 1/8	2 1/8	(16) 0.162 x 3 1/2	(2) 0.148 x 1 1/2	210	2,305	2,610	2,665	180	1,980	2,245	2,290	
(2) 2x6, x8	SUR/L26-2	3 1/8	4 15/16	2 5/8	1 7/16	2 3/8	(8) 0.162 x 3 1/2	(4) 0.162 x 2 1/2	725	1,150	1,305	1,325	625	990	1,120	1,140	
(2) 2x6, x8	HSUR/L26-2	3 1/8	4 15/16	2 7/16	1 1/4	2 3/16	(12) 0.162 x 3 1/2	(4) 0.162 x 2 1/2	725	1,790	1,795	1,795	625	1,540	1,545	1,545	
(2) 2x10, x12	SUR/L210-2	3 1/8	8 11/16	2 5/8	1 7/16	2 3/8	(14) 0.162 x 3 1/2	(6) 0.162 x 2 1/2	1,150	2,015	2,280	2,345	990	1,735	1,960	2,015	
(2) 2x10, x12	HSUR/L210-2	3 1/8	8 11/16	2 7/16	1 1/4	2 3/16	(20) 0.162 x 3 1/2	(6) 0.162 x 2 1/2	1,150	2,980	3,360	3,410	990	2,565	2,890	2,935	
(2) 2x14	HSUR/L214-2	3 1/8	12 11/16	2 7/16	1 1/4	2 3/16	(26) 0.162 x 3 1/2	(8) 0.162 x 2 1/2	1,490	3,875	4,370	4,680	1,280	3,335	3,760	4,025	
4x6, x8	SUR/L46	3 9/16	4 3/4	2 5/8	1	2 3/8	(8) 0.162 x 3 1/2	(4) 0.162 x 3 1/2	730	1,150	1,265	1,265	630	990	1,090	1,090	
4x6, x8	HSUR/L46	3 9/16	4 3/4	2 7/16	1	2 3/16	(12) 0.162 x 3 1/2	(4) 0.162 x 3 1/2	725	1,790	1,795	1,795	625	1,540	1,545	1,545	
4x10, x12	SUR/L410	3 9/16	8 1/2	2 5/8	1	2 3/8	(14) 0.162 x 3 1/2	(6) 0.162 x 3 1/2	1,140	2,015	2,245	2,245	980	1,735	1,930	1,930	
4x10, x12	HSUR/L410	3 9/16	8 1/2	2 7/16	1	2 3/16	(20) 0.162 x 3 1/2	(6) 0.162 x 3 1/2	1,150	2,980	3,360	3,410	990	2,565	2,890	2,935	
4x14	SUR/L414	3 9/16	12 1/2	2 5/8	1	2 3/8	(18) 0.162 x 3 1/2	(8) 0.162 x 3 1/2	1,490	2,400	2,400	2,400	1,280	2,065	2,065	2,065	
4x14	HSUR/L414	3 9/16	12 1/2	2 7/16	1	2 3/16	(26) 0.162 x 3 1/2	(8) 0.162 x 3 1/2	1,490	3,875	4,370	4,680	1,280	3,335	3,760	4,025	

1. Uplift loads have been increased for earthquake or wind loading with no further increase allowed. Reduce where other loads govern.
2. Roof loads are 125% of floor loads unless limited by other criteria. Floor loads may be adjusted for load durations according to the code provided they do not exceed those in the roof column.
3. Truss chord cross-grain tension may limit allowable loads in accordance with ANSI/TPI 1-2014. Simpson Strong-Tie® Connector Selector® software includes the evaluation of cross-grain tension in its hanger allowable loads. For additional information, contact Simpson Strong-Tie.
4. **Fasteners:** Nail dimensions are listed diameter by length. See pp. 21–22 for fastener information.

C-C-2021 ©2021 SIMPSON STRONG-TIE COMPANY INC.

HRC/HHRC

Hip-Ridge Face-Mount Connectors

HRC is a field slopeable connector that attaches hip roof beams to the end of a ridge beam. The HRC may be sloped downward a maximum of 45°.

HHRC accommodates higher loads and uses Strong-Drive® SD Connector screws.

Material: HRC22 — 16 gauge; HHRC — 12 gauge

Finish: Galvanized

Installation:

- Use all specified fasteners (included with HHRC); see General Notes.
- On end of ridge — use optional diamond holes on HRC22 to secure the HRC. Bend face flanges on HRC22 back flush with ridge, and complete nailing.
- HRC22 on face of ridge — adjust to correct height and install nails.
- Double bevel-cut hip members to achieve full bearing capacity with HRC.

Codes: See p. 11 for Code Reference Key Chart

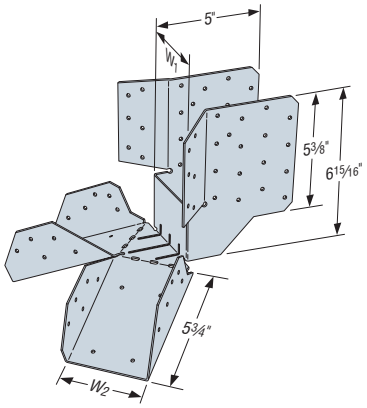

HHRC44
(others similar)

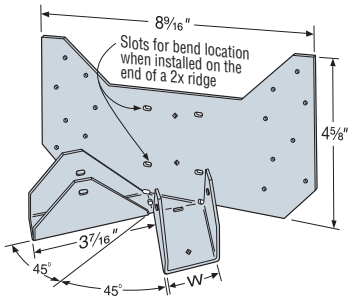

HRC22

HRC Allowable Loads

Model No.	Member Size		Fasteners (in.)		DF/SP Allowable Loads				SPF/HF Allowable Loads				Code Ref.
	W (in.)	Ridge	Carrying Member	Each Hip	Uplift (160)	Floor (100)	Snow (115)	Roof (125)	Uplift (160)	Floor (100)	Snow (115)	Roof (125)	
HRC22	1 9/16	2x or 1¾" wide	(16) 0.148 x 1½	(2) 0.148 x 1½	370	975	1,105	1,185	320	840	950	1,020	IBC, FL, LA

1. Allowable loads shown are for each hip. Total load carried by the connector is double this number.
2. Uplift loads have been increased for earthquake or wind loading with no further increase allowed. Reduce where other loads govern.
3. Roof loads are 125% of floor loads unless limited by other criteria. Floor loads may be adjusted for load durations according to the code provided they do not exceed those in the roof column.
4. **Fasteners:** Nail dimensions are listed diameter by length. See pp. 21–22 for fastener information.

HHRC Allowable Loads

Model No.	Member Type	Connection Members		Connector Width (in.)		Fasteners		Allowable Loads Per Hip				Code Ref.
								DF/SP		SPF		
		Ridge	Hip	Ridge (W_1)	Hip (W_2)	Ridge	Each Hip	Download (100/115/125)	Uplift (160)	Download (100/115/125)	Uplift (160)	
HHRC2-2	Sawn Lumber	(2) 2x	(2) 2x	3⅛	3⅛	(40) #10 x 2½" SD	(22) #10 x 2½" SD	3,110	1,970	2,315	1,635	IBC, FL, LA
HHRC42	Sawn Lumber	4x	2x	3⅝	1 9/16	(40) #10 x 2½" SD	(22) #10 x 1½" SD	3,110	1,490	2,315	1,385	
HHRC42-2	Sawn Lumber	4x	(2) 2x	3⅝	3⅛	(40) #10 x 2½" SD	(22) #10 x 2½" SD	3,110	1,970	2,315	1,635	
HHRC4/1.81	SCL/Sawn Lumber	4x	1¾	3⅝	1 13/16	(40) #10 x 2½" SD	(22) #10 x 1½" SD	3,110	1,490	2,315	1,385	
HHRC44	Sawn Lumber	4x	4x	3⅝	3⅝	(40) #10 x 2½" SD	(22) #10 x 2½" SD	3,110	1,970	2,315	1,635	
	SCL	3½	3½	3⅝	3⅝	(40) #10 x 2½" SD	(22) #10 x 2½" SD	3,110	1,970	2,315	1,635	
HHRC5.25/3.25	Glulam	5⅛	3⅛	5¼	3¼	(40) #10 x 2½" SD	(22) #10 x 2½" SD	3,110	1,970	2,315	1,635	
HHRC5.37/3.12	SCL/Sawn Lumber	5¼	(2) 2x	5¼	3¼	(40) #10 x 2½" SD	(22) #10 x 2½" SD	3,110	1,970	2,315	1,635	
HHRC5.37/3.56	SCL/Sawn Lumber	5¼	3½	5⅜	3⅝	(40) #10 x 2½" SD	(22) #10 x 2½" SD	3,110	1,970	2,315	1,635	
HHRC64	Sawn Lumber	6x	4x	5⅝	3⅝	(40) #10 x 2½" SD	(22) #10 x 2½" SD	3,110	1,970	2,315	1,635	
HHRC66	Sawn Lumber	6x	6x	5⅝	5⅝	(40) #10 x 2½" SD	(27) #10 x 2½" SD	3,110	1,970	2,315	1,635	

1. Allowable loads shown are for each hip. Total load carried by the connector is double this number.
2. Uplift loads have been increased for earthquake or wind loading with no further increase allowed. Reduce where other loads govern.
3. **Fasteners:** SD screws are Simpson Strong-Tie® Strong-Drive SD Connector screws. See pp. 21–22 for fastener information.

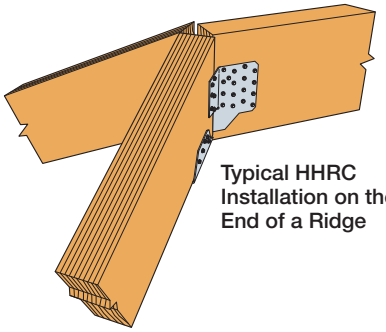

Typical HHRC Installation on the End of a Ridge

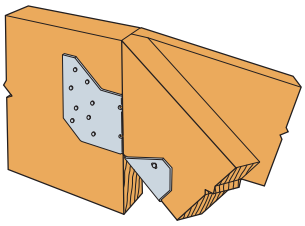

Typical HRC22 Installation on the End of a Ridge

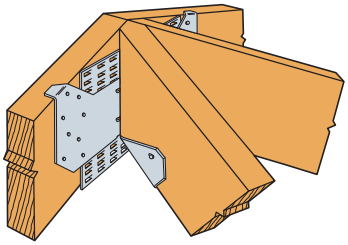

Optional Installation for HRC22 Only

C-C-2021 ©2021 SIMPSON STRONG-TIE COMPANY INC.

VPA

Variable-Pitch Connector

The VPA may be sloped in the field, offering a versatile solution for attaching rafters to the top plate. It will adjust to accommodate slopes between 3:12 and 12:12, making it a complement to the versatile LSSR and LSSJ hangers. This connector eliminates the need for notched rafters, beveled top plates and toe nailing.

Material: 18 gauge

Finish: Galvanized

Installation: • Use all specified fasteners; see General Notes

Codes: See p. 11 for Code Reference Key Chart

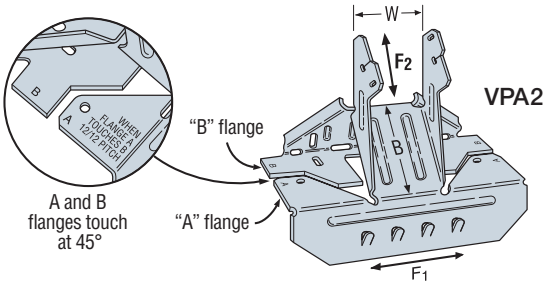

Joist Width	Model No.	W (in.)	Fasteners (in.)		DF/SP Allowable Loads				SPF/HF Allowable Loads				Code Ref.
			Carrying Member	Carried Member	Uplift	Download (100/115/125)	Lateral (160)		Uplift	Download (100/115/125)	Lateral (160)		
					(160)		F_1	F_2	(160)		F_1	F_2	
1½	VPA2	1 9/16	(8) 0.148 x 3	(2) 0.148 x 1½	255	1,105	345	300	220	950	295	260	IBC, FL, LA
2½	VPA3	2 9/16	(9) 0.148 x 3	(2) 0.148 x 1½	255	1,245	345	300	220	1,070	295	260	
3½	VPA4	3 9/16	(11) 0.148 x 3	(2) 0.148 x 1½	255	1,245	345	300	220	1,070	295	260	

1. Loads have been increased for wind or earthquake loading, with no further increase allowed. Reduce where other loads govern.
2. **Fasteners:** Nail dimensions are listed diameter by length. See pp. 21–22 for fastener information.

VPA Installation Sequence

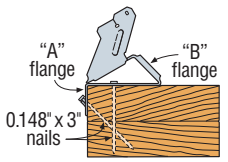

Step 1
Install top nails and face PAN nails in "A" flange to outside wall top plate.

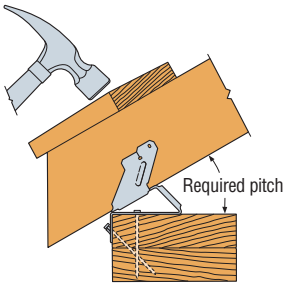

Step 2
Seat rafter with a hammer, adjusting "B" flange to the required pitch.

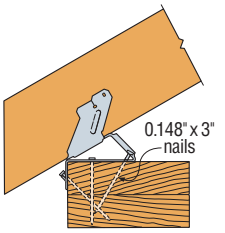

Step 3
Install "B" flange nails in the obround nail holes, locking the pitch.

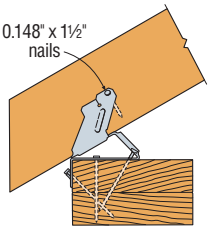

Step 4
Install 0.148" x 1½" nail into tab nail hole. Hammer nail in at a slight angle to prevent splitting.

HCP

Hip Corner Plate

The HCP connects a rafter or joist to double top plates at a 45° angle.

Material: 18 gauge

Finish: HCP2 — galvanized or ZMAX® coating; HCP4Z — ZMAX coating

Installation: • Use all specified fasteners; see General Notes.

- Attach HCP to double top plates; birdsmouth not required for table uplift loads but may be required for download.
- Install rafter and complete nailing. Rafter may be sloped to 45°.

Codes: See p. 11 for Code Reference Key Chart

These products are available with additional corrosion protection. For more information, see p. 14.

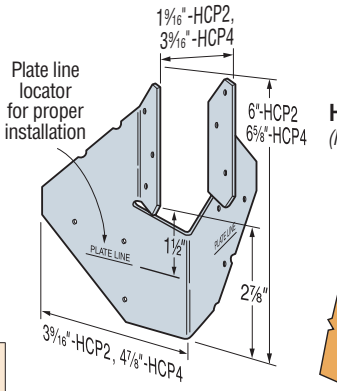

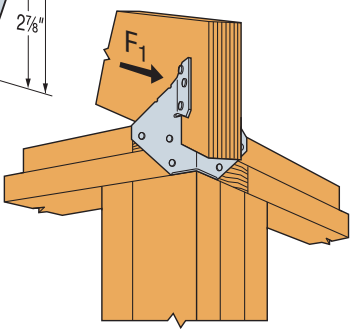

Typical HCP Installation

Member Size	Model No.	Fasteners (in.)		DF/SP Allowable Loads		SPF/HF Allowable Loads		Code Ref.
		To Rafters	To Plates	(160)		(160)		
				Uplift	F_1	Uplift	F_1	
2x	HCP2	(6) 0.148 x 1½	(6) 0.148 x 1½	590	255	510	220	IBC, FL, LA
4x	HCP4Z	(8) 0.148 x 3	(8) 0.148 x 3	990	230	850	200	

1. Loads have been increased for wind or earthquake loading, with no further increase allowed. Reduce where other loads govern.
2. The HCP can be installed on the inside and the outside of the wall with a flat bottom chord truss and achieve twice the allowable load.
3. **Fasteners:** Nail dimensions are listed diameter by length. See pp. 21–22 for fastener information.

C-C-2021 ©2021 SIMPSON STRONG-TIE COMPANY INC.

CJTZ/HCJTZ

Light and Heavy-Duty Concealed Joist Ties

The CJTZ/HCJTZ are concealed connectors. They can be installed three ways: with no routing of header/post or beam; a routed header/post, or a routed beam. It is part of a concealed connector system that includes the CPTZ and CBTZ.

The HCJTZ is a heavy concealed beam tie to be used with large glulam beams resisting heavy loads. The HCJTZ features a unique shape that allows installers to insert the connector into the end of the beam without a visible slot cut into the bottom of the beam.

Material: CJTZ —12 gauge; HCJTZ — 10 gauge

Finish: Galvanized

Installation:

- Use all specified fasteners; see General Notes.
- The CJTZ/HCJTZ is supplied with all dowels and screws required. Screws require a hex-head driver.
- Router end of beam for screw heads for flush installation.
- The carried member may be sloped up or down to 45° with full table loads.
- The CJTZ only is available with two dowel lengths. To order: specify short (e.g. CJT3ZS) or long dowels (e.g. CJT3ZL) (see footnote #1 below).

Options:

- See technical bulletin T-C-CJTZ at **strongtie.com**
- For additional concealed beam connections, see *Mass Timber Construction* catalog, pp. 188–191 at **strongtie.com**

Codes: See p. 11 for Code Reference Key Chart

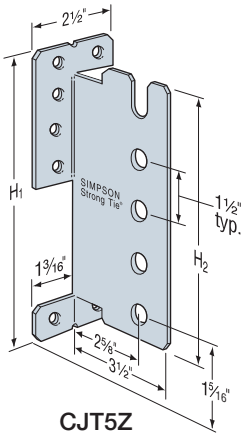

CJT5Z
(others similar)

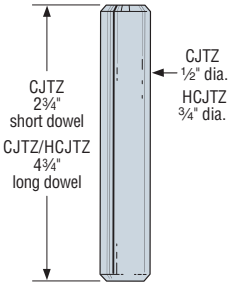

Chamfered Steel Dowel
(galvanized)

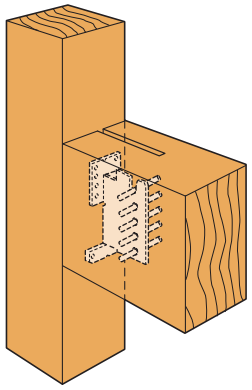

Typical CJTZ Installation
(dowels should be centered in beam; HCJTZ similar)

Warning: This connector requires special attention to ensure correct installation. The beam must be installed perpendicular to the support member. The connection's components may be damaged if the beam is rotated from its opposite end during or after installation. Damaged components may not be noticeable and may reduce the connector's load carrying capacity.

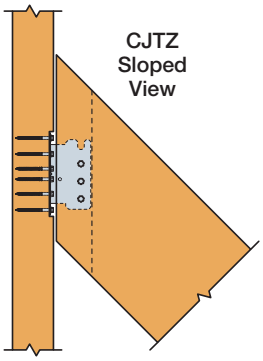

CJTZ Sloped View

These products are available with additional corrosion protection. For more information, see p. 14.

Model No.	Min. Joist Size	Dimensions (in.)		Fasteners (Quantity – Type)		Allowable Loads				Code Ref.
		H_1	H_2	Header	Joist Pins (2¾" or 4¾")	Uplift (160)	Floor (100)	Snow (115)	Roof (125)	
Douglas Fir–Larch										
CJT3Z	4x6	5⁹⁄₁₆	4⁷⁄₁₆	(6) ¼" x 3" SDS	(3) ½"	985	1,050	1,050	1,050	IBC, FL, LA
	4x8	5⁹⁄₁₆	4⁷⁄₁₆	(6) ¼" x 3" SDS	(3) ½"	1,540	1,730	1,730	1,730	
CJT4Z	4x10	7	5¹⁵⁄₁₆	(8) ¼" x 3" SDS	(4) ½"	2,625	2,970	2,970	2,970	
CJT5Z	4x12	8⁹⁄₁₆	7⁷⁄₁₆	(10) ¼" x 3" SDS	(5) ½"	3,160	3,935	4,520	4,580	
CJT6Z	4x12	10	8¹⁵⁄₁₆	(12) ¼" x 3" SDS	(6) ½"	4,305	4,220	4,220	4,220	
Glulam										
CJT3Z	3⅛" x 7½"	5⁹⁄₁₆	4⁷⁄₁₆	(6) ¼" x 3" SDS	(3) ½"	1,540	1,835	1,835	1,835	IBC, FL, LA
CJT4Z	3⅛" x 9"	7	5¹⁵⁄₁₆	(8) ¼" x 3" SDS	(4) ½"	2,625	3,180	3,180	3,180	
CJT5Z	3⅛" x 10½"	8⁹⁄₁₆	7⁷⁄₁₆	(10) ¼" x 3" SDS	(5) ½"	3,160	3,900	4,480	4,570	
CJT6Z	3⅛" x 12"	10	8¹⁵⁄₁₆	(12) ¼" x 3" SDS	(6) ½"	4,305	4,510	4,860	4,860	
HCJTZ	5⅛" x 15"	13¹⁄₁₆	13¹⁄₁₆	(22) ¼" x 3" SDS	(7) ¾"	9,210	8,465	8,465	8,465	
PSL										
CJT3Z	3½" x 9½"	5⁹⁄₁₆	4⁷⁄₁₆	(6) ¼" x 3" SDS	(3) ½"	1,540	2,220	2,220	2,220	IBC, FL, LA
CJT4Z	3½" x 9½"	7	5¹⁵⁄₁₆	(8) ¼" x 3" SDS	(4) ½"	2,625	2,810	2,810	2,810	
CJT5Z	3½" x 9½"	8⁹⁄₁₆	7⁷⁄₁₆	(10) ¼" x 3" SDS	(5) ½"	3,160	3,980	4,285	4,285	
CJT6Z	3½" x 11⅞"	10	8¹⁵⁄₁₆	(12) ¼" x 3" SDS	(6) ½"	4,305	4,640	4,640	4,640	
HCJTZ	5⅛" x 15"	13¹⁄₁₆	13¹⁄₁₆	(22) ¼" x 3" SDS	(7) ¾"	9,210	8,465	8,465	8,465	

1. Center dowel in beam. Short dowel (½" x 2¾") is for use with 3⅛" glulam beam, 4x sawn lumber, or 3½" wide PSL. Long dowel (½" x 4¾") is for use with 5⅛" glulam beam, 6x sawn lumber, or greater widths.
2. **Fasteners:** SDS screws are Simpson Strong-Tie® Strong-Drive® SDS Heavy-Duty Connector screws. See pp. 21–22 for fastener information.

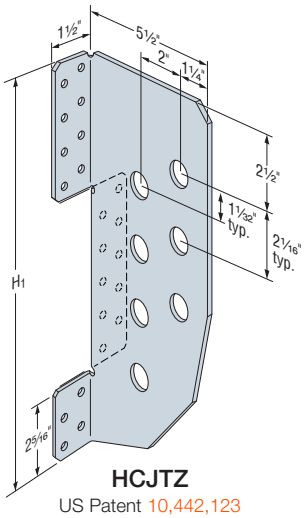

HCJTZ
US Patent 10,442,123

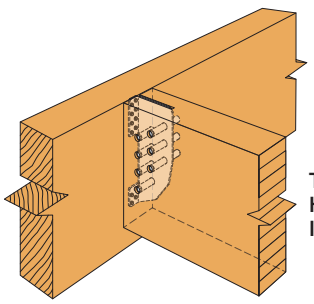

Typical HCJTZ Installation

C-C-2021 ©2021 SIMPSON STRONG-TIE COMPANY INC.

JB/JBA/LB/LBAZ/BA/HB

Joist, Beam and Purlin Top-Flange Hangers

This product is preferable to similar connectors because of (a) easier installation, (b) higher loads, (c) lower installed cost, or a combination of these features.

The LBAZ and JBA hangers provide higher loads for 2x10, 2x12 and 2x14 members in 14-gauge and 18-gauge steel, respectively. The nail locations on the JBA enable effective use with nailers.

The BA hangers are cost-effective hangers featuring min./max. joist nailing option. Min. Nailing featuring Positive Angle Nailing targets moderate load conditions whereas the Max. Nailing generates capacities for higher loads. The unique two-level embossment provides added stiffness to the top flange. See tables on pp. 131–135. See Hanger Options on pp. 98–99 for hanger modifications, which may result in reduced loads.

Material: JB/JBA — 18 gauge; LB/LBAZ — 14 gauge; BA — 14 gauge or 12 gauge; HB — 10 gauge

For modified hangers, gauge may increase from that specified for non-modified hangers. Hanger configurations, height and fastener quantity may increase from the tables depending on joist size, skew and slope. Embossments may be omitted.

Finish: BA, HB, JB, JBA, LB and LBAZ — galvanized; BA, HB and LB may be ordered hot-dip galvanized; specify HDG.

Installation:

- Use specified fasteners; see General Notes and nailer table notes.
- LB, LBAZ, HB and BA may also be welded to steel headers with weld size to match material thickness. The minimum required weld to the top flanges is 2" (1 7/16" for LBAZ) fillet weld to each side of each top flange tab. Distribute the weld equally on both top flanges. Welding cancels the top and face nailing requirements. Consult the code for special considerations when welding galvanized steel. The area should be well-ventilated (see p. 18, note k for welding information). Weld on applications produce the maximum allowable down load listed. For uplift loads refer to technical bulletin T-C-WELDUPLFT at **strongtie.com**.
- Ledgers must be evaluated for each application separately. Check TF dimension, nail length and nail location on ledger.
- For modified hangers, fastener quantity may increase from the tables depending on joist size, skew and slope.
- Bevel cut the carried member for skewed applications.

Options:

- See modification tables for allowed options and associated load reductions on p. 126

Codes: See p. 11 for Code Reference Key Chart

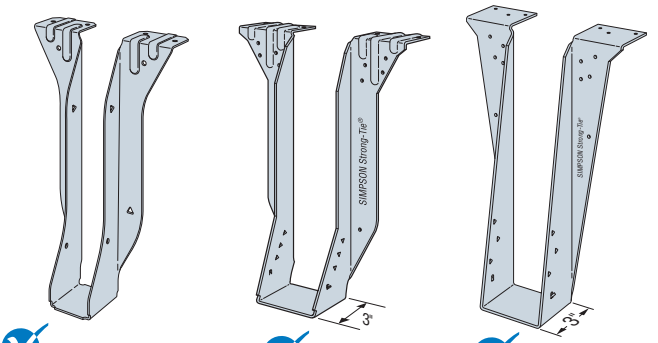

JBA *(LBAZ similar)* — **BA** *(standard)* US Patent 7,334,372 — **BA** *(modifiable)*

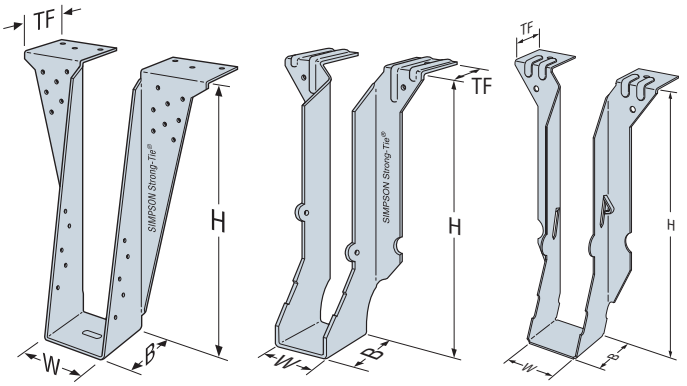

HB **LB** **JB**

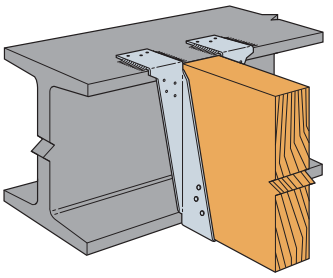

LBAZ and BA are acceptable for weld-on applications. See Installation Information.

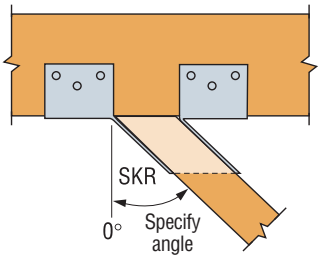

Top View BA Hanger Skewed Right

C-C-2021 ©2021 SIMPSON STRONG-TIE COMPANY INC.

Joist, Beam and Purlin Top-Flange Hangers (cont.)

Various Header Applications

Joist or Purlin Size	Model No.	Ga.	Dimensions (in.)				Fasteners (in.)		Allowable Loads by Header Type and Fastener					Code Ref.
			W	H	B	TF	Header	Joist	Uplift (160)	LVL	PSL	DF/SP	SPF/HF	
2x	JB26	18	1 9/16	See p. 131	1½	1 5/16	(4) 0.148 x 3	(2) Prong	—	—	—	995	780	IBC, FL, LA
	JB28				1½	1 5/16	(4) 0.148 x 3	(2) Prong	—	—	—	995	775	
	JB210A JB212A JB214A				2	1 7/16	(6) 0.162 x 3½	(2) 0.148 x 1½	260	—	—	1,685	1,190	
							(6) 0.148 x 3	(2) 0.148 x 1½	260	—	—	1,445	1,015	
2x	LB26	14	1 9/16	See p. 131	1½	1½	(4) 0.162 x 3½	(2) 0.148 x 1½	380	—	—	1,135	705	
	LB28				1½	1½	(4) 0.162 x 3½	(2) 0.148 x 1½	380	—	—	1,135	710	
	LB210AZ LB212AZ LB214AZ				2	1 7/16	(6) 0.162 x 3½	(2) 0.148 x 1½	355	—	—	1,865	1,330	
							(6) 0.148 x 3	(2) 0.148 x 1½	355	—	—	1,705	1,220	
4x	BA min.	12 and 14	3 9/16	7¼ to <11	3	2 7/16	(16) 0.148 x 3	(2) 0.148 x 1½	255	3,230	3,630	2,980	2,980	
				11 to 30			(16) 0.148 x 3	(2) 0.148 x 1½	255	3,230	3,630	3,870	2,980	
				7¼ to <11			(16) 0.162 x 3½	(2) 0.148 x 1½	255	4,015	3,705	3,205	2,660	
				11 to 30			(16) 0.162 x 3½	(2) 0.148 x 1½	255	4,015	3,705	3,780	3,095	
	BA max.			7¼ to 30			(16) 0.148 x 3	(8) 0.148 x 1½	1,275	3,555	3,630	3,625	3,550	
							(16) 0.162 x 3½	(8) 0.148 x 1½	1,275	4,715	4,320	4,720	4,005	
	HB	10	3 9/16	11 to 16	3½	3	(22) 0.162 x 3½	(10) 0.162 x 3½	2,075	5,818	5,640	5,395	3,820	

1. Uplift loads have been increased for earthquake or wind loading with no further increase allowed. Reduce where other loads govern.
2. Uplift loads are based on DF/SP lumber. For SPF/HF, use 0.86 x DF/SP uplift load.
3. Where noted for single-ply joist hangers, use (6) 0.148" x 1½" nails.
4. **Fasteners:** Nail dimensions are listed diameter by length. See pp. 21–22 for fastener information.

Nailer Table

Model No.	Nailer	Top Flange Nailing (in.)	Joist Nailing (in.)	Allowable Loads		
				Uplift (160)	DF/SP	SPF/HF
JB210A JB212A JB214A	2x	(6) 0.148 x 1½	(2) 0.148 x 1½	260	1,265	965
	3x	(6) 0.162 x 2½	(2) 0.148 x 1½	260	1,290	—
LB26	2x	(4) 0.148 x 1½	(2) 0.148 x 1½	—	850	—
LB28	2x	(4) 0.148 x 1½	(2) 0.148 x 1½	—	915	—
LB210AZ LB212AZ LB214AZ	2x	(6) 0.148 x 1½	(2) 0.148 x 1½	355	1,265	1,065
	3x	(6) 0.162 x 2½	(2) 0.148 x 1½	355	1,290	—
LB216	2x	(4) 0.148 x 1½	(2) 0.148 x 1½	—	1,150	—
BA	2x	(10) 0.148 x 1½	(2) 0.148 x 1½	255	1,970	1,875
	(2) 2x	(14) 0.148 x 3	(2) 0.148 x 1½	255	2,695	2,235
	3x	(14) 0.162 x 2½	(2) 0.148 x 1½	255	3,230	—
	4x	(14) 0.162 x 3½	(2) 0.148 x 1½	255	3,230	—
	Steel	(6) PDPAT-62KP	(2) 0.148 x 1½	—	3,695	3,695
HB	4x	(22) 0.162 x 3½	(10) 0.162 x 3½	1,465	5,200	—

1. Uplift values are for DF/SP nailers only.
2. See technical bulletin T-C-NAILUPLFT at **strongtie.com** for SP/HF loads and increased uplift loads with alternative nailing.
3. Attachment of nailer to supporting member is by the designer.
4. **Fasteners:** Nail dimensions are listed diameter by length. See pp. 21–22 for fastener information.

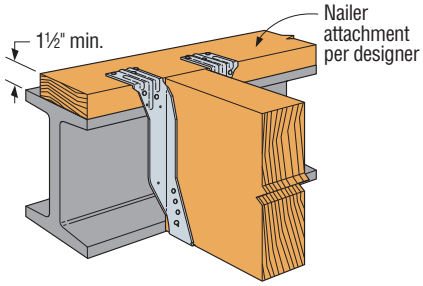

Typical BA Installation on Wood Nailer
(LB similar)

C-C-2021 ©2021 SIMPSON STRONG-TIE COMPANY INC.

Joist, Beam and Purlin Top-Flange Hangers (cont.)

Modifications and Associated Load Reductions

Hanger	Condition	Seat							Top Flange	
		Sloped Down 45° Max.	Sloped Up 45° Max.	Skewed 45° Max.	Sloped Down and Skewed		Sloped Up and Skewed		Top Flange Sloped 35° Max.	Top Flange Bent Open or Closed 30° Max.
BA	Min. height →	6	6	6	9¼	14	9¼	14	14[3]	9¼
	W < 2½"	0.82	0.66	0.95	0.54	0.82	0.64	0.64	(90 – a) / 90	(90 – a) / 90
	W ≥ 2½"	0.8	0.95	1	0.7	1	0.8	0.8	(90 – a) / 90	(90 – a) / 90
HB	Min. height →	8	8	8	11¼	14	11¼	14	14	11¼
	W < 2½"	0.84	0.7	1	0.47	0.84	0.62	0.69	(90 – a) / 90	(90 – a) / 90
	W ≥ 2½"	0.87	0.7	0.96	0.59	0.87	0.7	0.7	(90 – a) / 90	(90 – a) / 90

1. Reduction factors are not cumulative. Use the lowest factors that apply.
2. For straight-line interpolation, "a" is the specified angle.
3. The sloped top flange option is permitted for BA hangers with a minimum height of 11¼" when the load reduction factor is applied to the tabulated BA allowable loads for the minimum installation.

Reduction Factor Instructions

Allowable Download = Lower of (Seat or Top Flange) × (Table Load)

Allowable Uplift = 0.90 × (Table Load) for BA with W < 2½"
= 0.71 × (Table Load) for HB with W < 2½"
= 1.00 × (Table Load) for all others

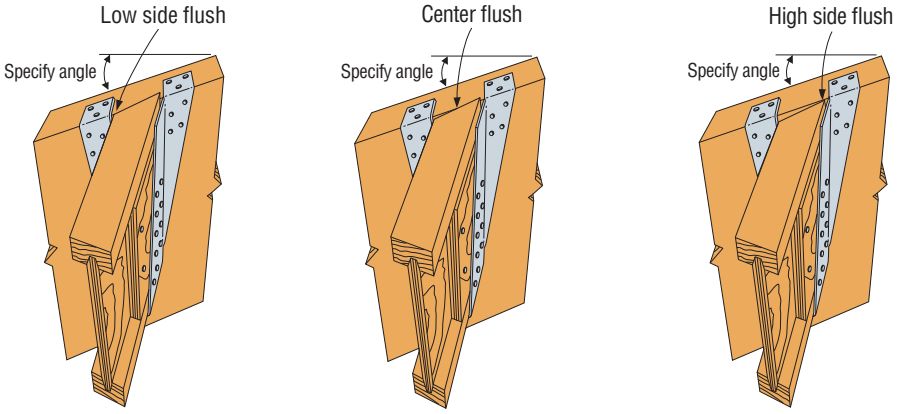

Sloped down and skewed left with sloped top flange installation.
When ordering, specify low side flush, center flush or high side flush.

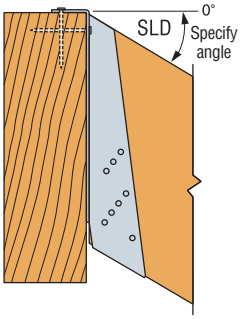

Typical Sloped Down Installation with Full Backing

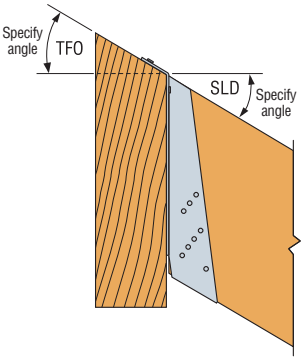

Typical Sloped Down with Top Flange Open

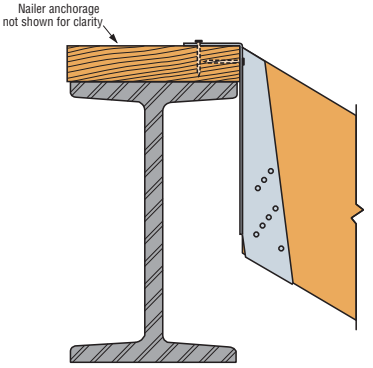

Typical Sloped Down on Nailer Non-Backed

C-C-2021 ©2021 SIMPSON STRONG-TIE COMPANY INC.

WP/HWP/HWPH/WMU

Purlin Top-Flange Hangers

The WP, HWP and HWPH series purlin hangers offer the greatest design flexibility and versatility. WMUs are designed for use on standard 8"-grouted masonry block wall construction. See pp. 240–241 for more information.

The HWP and HWPH high-wind purlin hangers have enhanced uplift. They are ideal for high-wind applications.

Material: (Top flange /stirrup): WP — 7/12 gauge; HWP — 7/12 gauge; HWPH — 3/7 gauge

Finish: Simpson Strong-Tie gray paint; hot-dip galvanized available: specify HDG, contact Simpson Strong-Tie

Installation:

- Use all specified fasteners.
- H dimensions are sized to account for normal joist shrinkage. W dimensions are for dressed timber widths.
- WP/HWP/HWPH hangers may be welded to steel headers with a minimum 1½"-long fillet weld on each side of the top flange to the header. Weld sizes: WP = 3⁄16", HWP = 3⁄16", HWPH = ¼" (see p. 18, note k for weld information). Weld-on applications achieve maximum allowable download. Uplift loads do not apply to this application. For uplift loads, refer to technical bulletin T-C-WELDUPLFT at **strongtie.com**.
- Hangers can support multi-ply carried members; the individual members must be secured together to work as a single unit before installation into the hanger.
- If joist is shorter than hanger by more than ½", then use only 50% of the table loads.

Options:

- See Hanger Options General Notes on p. 97.
- Refer to technical bulletin T-C-SLOPEJST at **strongtie.com** for information regarding load reductions on selected hangers which can be used without modification to support joists which have shallow slopes (≤¾:12).
- Some model configurations may differ from those shown. Contact Simpson Strong-Tie for details. For special order WP hangers, see technical bulletin T-C-WP-WS at **strongtie.com**.
- WP models are available in Type A (bevel-cut) or Type B (square-cut) style. Contact Simpson Strong-Tie when ordering.
- HWPH is available in a Type B configuration for skews up to 84 degrees.
- Hangers with a skew greater than 15° may have all the joist nails on the outside angle.
- For skewed condition, top flange width can increase up to 18". Contact Simpson Strong-Tie for specific application.
- Specify the slope up or down in degrees from the horizontal plane and/or the skew right or left in degrees from the perpendicular vertical plane. Specify whether low side, high side or center of joist will be flush with the top of the header (see illustration).
- Uplift loads are not available for open/closed TF, TF sloped and offset options.

Ridge Hanger (only available for WP)

- Top flange may be sloped to a maximum of 35° to accommodate a ridge (see illustration). Specify angle of the slope. Reduce allowable load using straight-line interpolation. See Open/Closed example. Specify H/L/C flush when ordering sloped top flange.

Codes: See p. 11 for Code Reference Key Chart

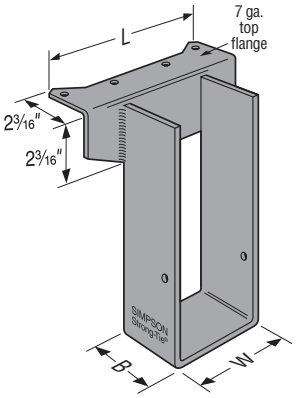

WP

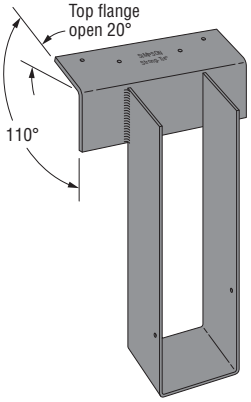

WP with Open Top Flange

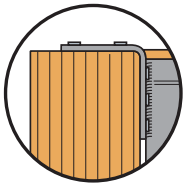

Eased Edge
Flatten edge of header to match top flange radius.

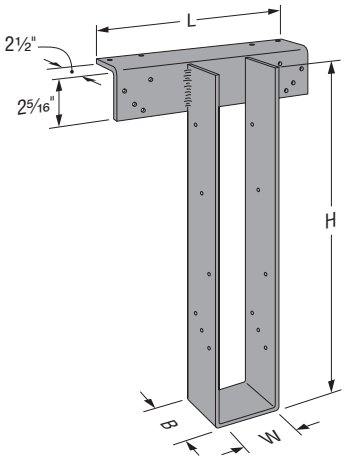

HWPH

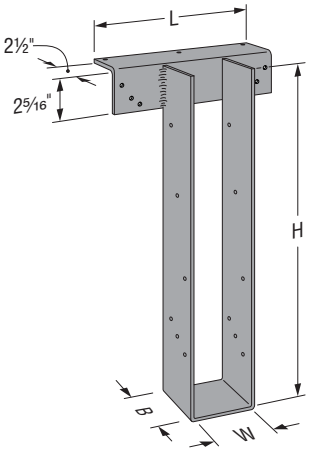

HWP

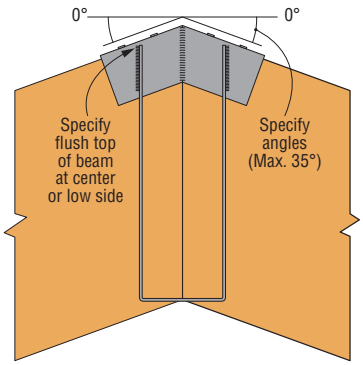

WP Ridge Installation

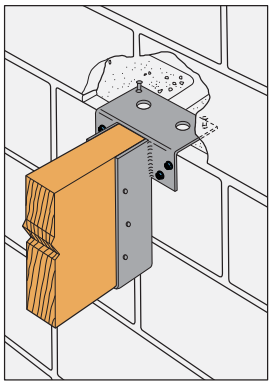

WMU Mid-Wall Installation
See pp. 240–241 for models and information

C-C-2021 ©2021 SIMPSON STRONG-TIE COMPANY INC.

Purlin Top-Flange Hangers (cont.)

Model	Stirrup Width (W) (in.)	Stirrup Seat Depth (B) (in.)	Top Flange Length (L) (in.)
WP	1 9/16 – 2 1/16	See load table	7
	2 1/8 – 3 5/8	2 1/2	7
	3 11/16 – 7 1/8	2 1/2	8
	7 3/16 – 7 1/2	2 1/2	10
HWP	1 9/16	5	10
	1 13/16	4	10
	2 3/8 – 5 3/8	3	10
	5 11/16 – 7 1/8	3	12
HWPH	1 13/16 – 2 1/2	See load table	10
	2 9/16 – 2 3/4	4	10
	3 1/4 – 3 9/16	3 1/4	10
	3 13/16 – 6 3/4	3 1/4	12
	6 13/16 – 7 1/2	3 1/4	14

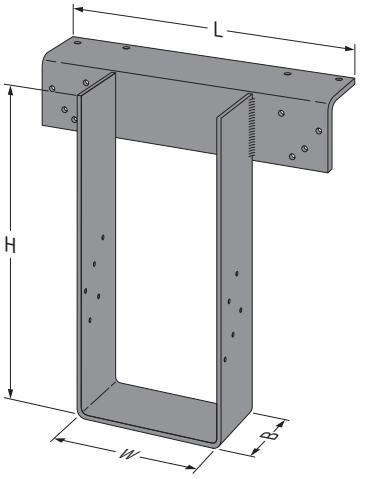

HWPH612 shown
(others similar)

Nailer Table

The table indicates the maximum allowable loads for WP, HWP and HWPH hangers used on wood nailers. Nailers are wood members attached to the top of a steel beam, concrete or masonry wall.

Model	Nailer	Top Flange Nailing (in.)	Uplift[1] (160)	Allowable Down Loads		
				DF/SP	SPF/HF	LSL
WP	2x	(4) 0.148 x 1 1/2	—	2,465	1,985	3,150
	(2) 2x	(4) 0.148 x 2 1/2	—	2,985	2,230	—
	3x or 4x	(4) 0.162 x 2 1/2	—	2,985	2,230	3,375
HWP	(2) 2x	(3) 0.148 x 3	710	4,415	3,860	4,415
	3x	(3) 0.162 x 2 1/2	970	4,415	3,860	—
	4x	(3) 0.162 x 2 1/2	1,535	4,920	3,860	4,920
HWPH	(2) 2x	(4) 0.162 x 2 1/2	710	5,910	4,820	5,910
	3x	(4) 0.162 x 2 1/2	970	5,970	5,125	—
	4x	(4) 0.162 x 3 1/2	1,550	5,970	5,125	5,970

1. Attachment of nailer to supporting member is the responsibility of the designer.
2. Uplift loads are based on DF/SP lumber. For SPF/HF, use 0.86 x DF/SP uplift load.
3. **Fasteners:** Nail dimensions are listed diameter by length. See pp. 21–22 for fastener information.

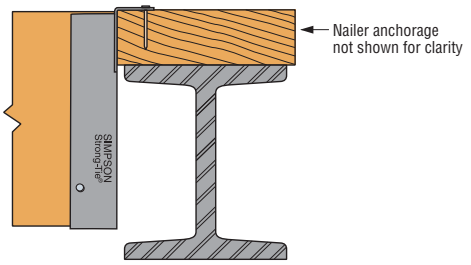

Installation on Wood Nailer

Various Header Applications

Model	Joist (in.)		Fasteners (in.)			Allowable Loads Header Type							Code Ref.
	Width	Height	Top	Face	Joist	Uplift (160)	LVL	PSL	LSL	DF/SP	SPF/HF	I-Joist	
WP	1 1/2 to 7 1/2	5 3/8 to 30	(4) 0.148 x 1 1/2	—	(2) 0.148 x 1 1/2	—	2,935	3,150	—	2,465	1,985	2,030	—
	2 1/2 to 7 1/2	5 3/8 to 30	(4) 0.148 x 2 1/2	—	(2) 0.148 x 1 1/2	—	2,935	3,150	3,150	2,985	2,230	—	IBC, FL, LA
	3 1/2 to 7 1/2	5 3/8 to 30	(4) 0.162 x 2 1/2	—	(2) 0.148 x 1 1/2	—	3,095	3,605	3,605	2,985	2,230	—	
HWP	1 1/2 to 7	6 to 15 5/8	(3) 0.162 x 3 1/2	(6) 0.162 x 3 1/2	(10) 0.148 x 1 1/2	1,535	3,995	4,500	4,350	3,955	3,955	—	
	1 1/2 to 7	15 3/4 to 28	(3) 0.162 x 3 1/2	(6) 0.162 x 3 1/2	(12) 0.148 x 1 1/2	1,570	3,995	4,500	4,350	3,955	3,955	—	
HWPH	2 1/2 to 7 1/2	6 to 15 5/8	(4) 0.162 x 3 1/2	(8) 0.162 x 3 1/2	(10) 0.148 x 1 1/2	1,685	6,595	7,025	5,450	5,920	4,740	—	
	2 1/2 to 7 1/2	15 3/4 to 32	(4) 0.162 x 3 1/2	(8) 0.162 x 3 1/2	(12) 0.148 x 1 1/2	2,075	6,595	7,025	5,450	5,920	4,740	—	

1. Code values are based on DF/SP header species.
2. Uplift loads have been increased for wind or earthquake loading with no further increase allowed. Reduce where other loads govern.
3. For hanger heights exceeding the joist height, the allowable load is 0.50 of the table load.
4. **Fasteners:** Nail dimensions are listed diameter by length. See pp. 21–22 for fastener information.

C-C-2021 ©2021 SIMPSON STRONG-TIE COMPANY INC.

Purlin Top-Flange Hangers (cont.)

Modifications and Associated Load Reductions for WP/HWP/HWPH

Models	Seat							Top Flange				Top Flange and Seat				Joist Height
	Seat Sloped 45° Max.		Seat Skewed Type A	Seat Skewed Type B		Seat Sloped and Skewed Type A 1°–45°		Top Flange Sloped 35° Max.	Top Flange Bent Open or Closed 30° Max.	Top Flange Offset		Top Flange Offset and Skewed Seat Type A, Bevel Cut 1°–45°		Top Flange Offset and Skewed Seat Type B, Plumb Cut 1°–84°		Joist Shorter Than Hanger
	Slope Up	Slope Down	1°–45°	1°–45°	46°–84°	Up	Down			Narrow	Wide	Narrow	Wide	Narrow	Wide	
WP	1.0	1.0	1.0	1.0		1.0	1.0	(90–a)/90	(90–a)/90	0.5		0.5		0.25	0.3	By more than ½": 0.50 By ½" or less: 1.00
HWP		0.8		N/A			0.8			0.5	0.6	0.5	0.6	N/A		
HWPH				0.8	0.7									0.5		

1. For straight-line interpolation, "a" is the specified angle.
2. Reduction factors are not cumulative. Use the lowest factors that apply.
3. Narrow ≤ 3½", Wide > 3½".
4. HWP & HWPH options receive catalog uplift loads except: skewed type A is 75% of the table load, skewed type B is 50% of the table load, top flange offset 30% of the table load.
5. Top flange bent closed is not available for HWP or HWPH.

Reduction Factor Instructions

Allowable Download = (lowest of Seat, Top Flange, or Joist Height) × (Table Load). See pp. 131–135 for table loads.

Allowable Uplift = as noted in table per height, see table above.

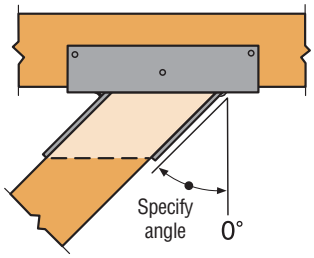

Typical HWP Top View Skewed Left Type A Hanger
(bevel-cut joist shown)

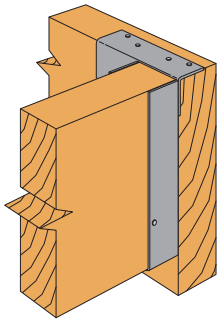

Typical WP Top Flange Offset Left

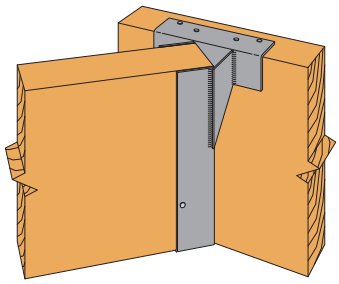

Typical WP Skewed Left Type B Hanger
(square-cut joist shown)

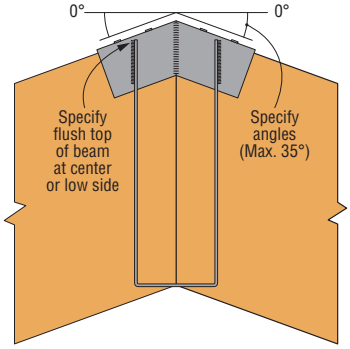

Typical WP Ridge Installation

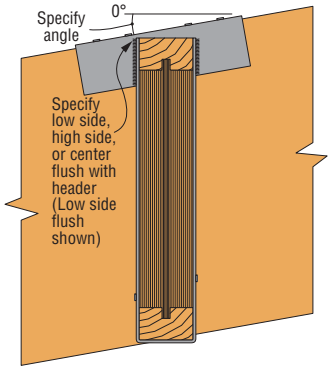

Typical WP Top Flange Sloped Down Left with Low Side Flush

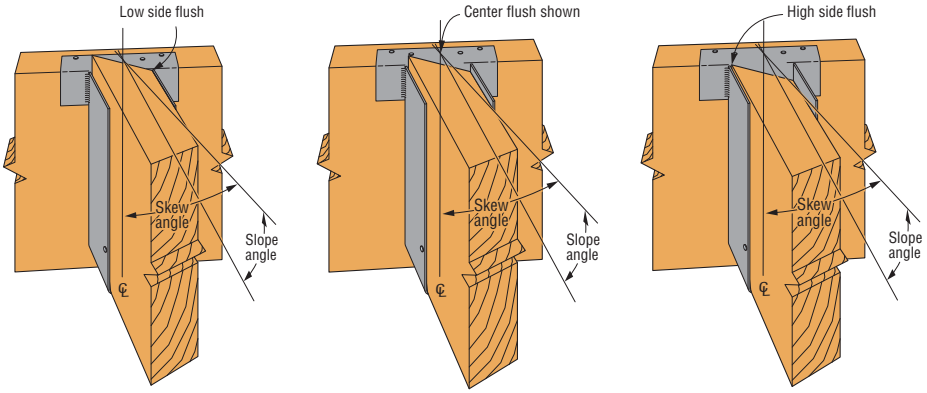

Typical WP sloped down, skewed right with type A hanger (joist end must be bevel cut). When ordering, specify low side flush, center flush or high side flush.

C-C-2021 ©2021 SIMPSON STRONG-TIE COMPANY INC.

HUTF/HUSTF

Heavy-Duty and Double-Shear Top-Flange Joist Hangers

See dimensions, material, loads on table pages.

HUSTF has the double-shear nailing advantage — distributing the joist load through two points on each nail for greater strength.

Finish: Galvanized. See Corrosion Information, pp. 12–15.

Installation:

- Use all specified fasteners; see General Notes
- Not acceptable for nailer or welded applications; see WP, HWP, HWPH and BA hangers
- HUTF — The minimum header or ledger size that can be used with this hanger is 3½"
- HUSTF — With 3x carrying members, use 0.162" x 2½" nails into the header and 0.162" x 3½" nails into the joist

Options:

- See Hanger Options General Notes on p. 97.
- HUTF rough beam sizes are available by special order.
- HUSTF cannot be modified.

Sloped and/or Skewed Seat

- HUTF can be skewed to a maximum of 45° or sloped to a maximum of 45°. HUTF can be skewed and sloped down only, provided W ≥ 2⅜". No skew with slope up options available.
- For skews greater than 15°, uplift loads are 0.75 of the table loads. Hangers with a skew greater than 15° may have all the joist nailing on the outside angle.
- For sloped and skewed combinations, the allowable loads are 0.70 of the table loads.
- For sloped down only hangers, allowable load is 0.78 of the table load.

Concealed Flange

- HUTF is available with one A flange concealed at 0.85 of the catalog table load.
- HUTF is available with both flanges concealed provided the W dimension is 2⁹⁄₁₆" or greater, at 0.85 of the table load. Specify HUCTF for both flanges concealed. No skew options available.

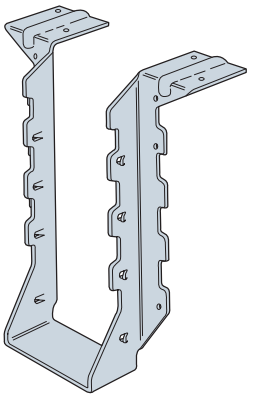

HUSTF

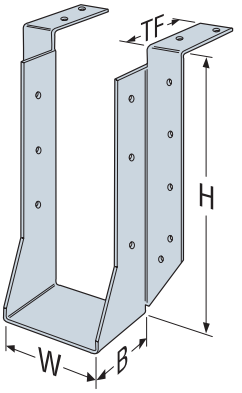

HU410TF

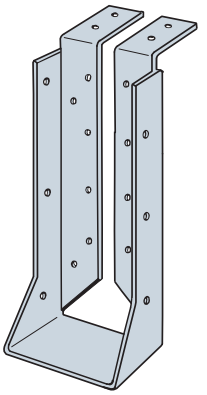

HUCTF

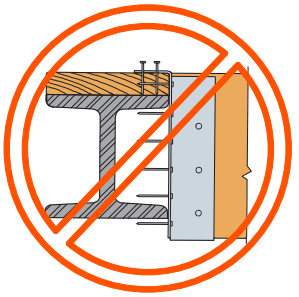

Nailer application is not acceptable. Fasteners cannot be installed.

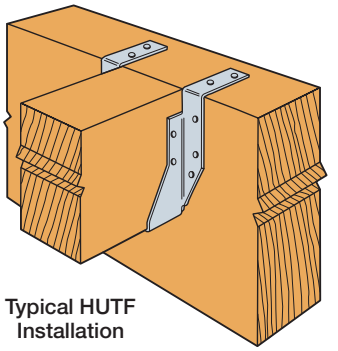

Typical HUTF Installation

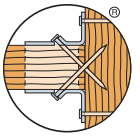

Double-Shear Nailing Top View

Some model configurations may differ from those shown. Production models have projected seats. Square-cut seats may be ordered. Contact Simpson Strong-Tie for details.

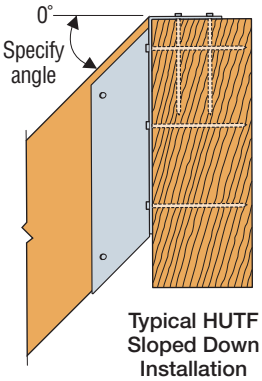

Typical HUTF Sloped Down Installation

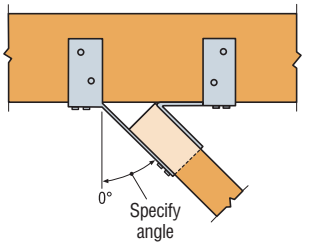

Top View HUTF Hanger Skewed Right

C-C-2021 ©2021 SIMPSON STRONG-TIE COMPANY INC.

Top-Flange Hangers – Solid Sawn Lumber (DF/SP)

SIMPSON Strong-Tie

Visit **strongtie.com/software** to learn more about our Joist Hanger Selector software.

These products are available with additional corrosion protection. For more information, see p. 14.

Joist or Purlin Size	Model No.	Ga.	Dimensions				Fasteners (in.)		DF/SP Allowable Loads				Installed Cost Index (ICI)	Code Ref.
			W	H	B	TF	Header	Joist	Uplift (160)	Floor (100)	Snow (115)	Roof (125)		
Sawn Lumber Sizes														
2x4	PF24	18	1 9/16	3 7/16	1 1/2	1 1/16	(2) 0.148 x 3	(2) 0.148 x 3	300	1,255	1,255	1,255	Lowest	IBC, FL, LA
	HU24TF	12	1 9/16	3 7/16	2 1/4	2 7/16	(6) 0.162 x 3 1/2	(2) 0.148 x 1 1/2	190	1,865	1,865	1,865	850%	
DBL 2x4	HU24-2TF	12	3 1/8	3 7/16	2 1/2	2 1/2	(8) 0.162 x 3 1/2	(2) 0.148 x 3	370	2,050	2,050	2,050	Lowest	
2x6	JB26	18	1 9/16	5 3/8	1 1/2	1 5/16	(4) 0.148 x 3	(2) Prong	—	995	995	995	Lowest	
	LB26	14	1 9/16	5 3/8	1 1/2	1 1/2	(4) 0.162 x 3 1/2	(2) 0.148 x 1 1/2	380	1,135	1,135	1,135	117%	
	HU26TF	12	1 9/16	5 3/8	2 1/4	2 7/16	(10) 0.162 x 3 1/2	(4) 0.148 x 1 1/2	660	2,550	2,550	2,550	568%	
DBL 2x6	HUS26-2TF	14	3 1/8	5 3/8	2	1 3/4	(6) 0.162 x 3 1/2	(4) 0.162 x 3 1/2	1,200	2,440	2,440	2,440	Lowest	
	WP26-2	12	3 1/8	5 3/8	2 1/2	2 3/16	(4) 0.148 x 2 1/2	(2) 0.148 x 3	—	2,985	2,985	2,985	33%	
	HU26-2TF	12	3 1/8	5 3/8	2 1/2	2 1/2	(10) 0.162 x 3 1/2	(4) 0.148 x 3	815	2,785	2,785	2,785	87%	
2x8	JB28	18	1 9/16	7 1/4	1 1/2	1 5/16	(4) 0.148 x 3	(2) Prong	—	955	955	955	Lowest	
	LB28	14	1 9/16	7 1/4	1 1/2	1 1/2	(4) 0.162 x 3 1/2	(2) 0.148 x 1 1/2	380	1,135	1,135	1,135	98%	
	HU28TF	12	1 9/16	7 1/8	2 1/4	2 7/16	(10) 0.162 x 3 1/2	(4) 0.148 x 1 1/2	700	2,910	2,970	3,010	563%	
DBL 2x8	HUS28-2TF	14	3 1/8	7 1/4	2	1 7/8	(8) 0.162 x 3 1/2	(6) 0.162 x 3 1/2	1,765	3,400	3,400	3,400	Lowest	
	WP28-2	12	3 1/8	7 1/8	2 1/2	2 3/16	(4) 0.148 x 2 1/2	(2) 0.148 x 3	—	2,985	2,985	2,985	16%	
	HU28-2TF	12	3 1/8	7 1/8	2 1/2	2 1/2	(12) 0.162 x 3 1/2	(4) 0.148 x 3	815	3,265	3,265	3,265	75%	
2x10	JB210A	18	1 9/16	9 3/16	2	1 7/16	(6) 0.162 x 3 1/2	(2) 0.148 x 1 1/2	260	1,685	1,685	1,685	*	
	LB210AZ	14	1 9/16	9 3/16	2	1 7/16	(6) 0.162 x 3 1/2	(2) 0.148 x 1 1/2	355	1,865	1,865	1,865	*	
	HU210TF	12	1 9/16	9 1/8	2 1/4	2 7/16	(12) 0.162 x 3 1/2	(4) 0.148 x 1 1/2	700	2,910	2,970	3,010	359%	
DBL 2x10	BA210-2	14	3 1/8	9 1/8	3	2 1/2	(16) 0.162 x 3 1/2	(8) 0.148 x 3	1,275	4,720	4,720	4,720	*	
	HUS210-2TF	14	3 1/8	9 1/4	2	1 1/2	(10) 0.162 x 3 1/2	(8) 0.162 x 3 1/2	2,315	3,735	4,065	4,275	Lowest	
	WP210-2	12	3 1/8	9 1/8	2 1/2	2 3/16	(4) 0.148 x 2 1/2	(2) 0.148 x 3	—	2,985	2,985	2,985	9%	
	HU210-2TF	12	3 1/8	9 1/8	2 1/2	2 1/2	(14) 0.162 x 3 1/2	(6) 0.148 x 3	1,220	3,945	3,945	3,945	67%	
TPL 2x10	HU210-3TF	12	4 11/16	9 1/8	2 1/2	2 1/2	(14) 0.162 x 3 1/2	(6) 0.162 x 3 1/2	1,420	3,945	3,945	3,945	Lowest	
2x12	JB212A	18	1 9/16	11 1/8	2	1 7/16	(6) 0.162 x 3 1/2	(2) 0.148 x 1 1/2	260	1,685	1,685	1,685	*	
	LB212AZ	14	1 9/16	11 1/8	2	1 7/16	(6) 0.162 x 3 1/2	(2) 0.148 x 1 1/2	355	1,865	1,865	1,865	*	
	HU212TF	12	1 9/16	11	2 1/4	2 7/16	(14) 0.162 x 3 1/2	(6) 0.148 x 1 1/2	700	3,070	3,070	3,070	339%	
DBL 2x12	HUS212-2TF	14	3 1/8	11 1/8	2	2 1/4	(10) 0.162 x 3 1/2	(8) 0.162 x 3 1/2	2,080	4,375	4,375	4,375	Lowest	
	WP212-2	12	3 1/8	11	2 1/2	2 3/16	(4) 0.148 x 2 1/2	(2) 0.148 x 3	—	2,985	2,985	2,985	12%	
	HU212-2TF	12	3 1/8	11	2 1/2	2 1/2	(16) 0.162 x 3 1/2	(6) 0.148 x 3	1,220	4,590	4,590	4,590	48%	
TPL 2x12	HU212-3TF	12	4 11/16	11	2 1/2	2 1/2	(16) 0.162 x 3 1/2	(6) 0.162 x 3 1/2	1,420	4,590	4,590	4,590	Lowest	
2x14	JB214A	18	1 9/16	13 1/8	2	1 7/16	(6) 0.162 x 3 1/2	(2) 0.148 x 1 1/2	260	1,685	1,685	1,685	*	
	LB214AZ	14	1 9/16	13 1/8	2	1 7/16	(6) 0.162 x 3 1/2	(2) 0.148 x 1 1/2	355	1,865	1,865	1,865	*	
	HU214TF	12	1 9/16	13	2 1/4	2 1/2	(16) 0.162 x 3 1/2	(6) 0.148 x 1 1/2	1,140	2,955	3,045	3,110	189%	
DBL 2x14	HUS214-2TF	14	3 1/8	13 1/8	2	2 1/4	(12) 0.162 x 3 1/2	(8) 0.162 x 3 1/2	2,715	4,065	4,065	4,065	Lowest	
	WP214-2	12	3 1/8	13	2 1/2	2 3/16	(4) 0.148 x 2 1/2	(2) 0.148 x 3	—	2,985	2,985	2,985	2%	
	HU214-2TF	12	3 1/8	13	2 1/2	2 1/2	(18) 0.162 x 3 1/2	(8) 0.148 x 3	1,330	4,030	4,030	4,030	33%	
TPL 2x14	HU214-3TF	12	4 11/16	13	2 1/2	2 1/2	(18) 0.162 x 3 1/2	(8) 0.162 x 3 1/2	1,560	4,030	4,030	4,030	Lowest	
2x16	LB216	14	1 9/16	15 1/8	2	1 1/2	(4) 0.162 x 3 1/2	(2) 0.148 x 1 1/2	380	1,480	1,480	1,480	Lowest	
	HU216TF	12	1 9/16	15	2 1/4	2 1/2	(18) 0.162 x 3 1/2	(8) 0.148 x 1 1/2	1,065	3,235	3,360	3,440	199%	

See footnotes on p. 133.

Codes: See p. 11 for Code Reference Key Chart

C-C-2021 ©2021 SIMPSON STRONG-TIE COMPANY INC.

Top-Flange Hangers – Solid Sawn Lumber (DF/SP)

SIMPSON Strong-Tie®

These products are available with additional corrosion protection. For more information, see p. 14.

Joist or Purlin Size	Model No.	Ga.	Dimensions				Fasteners (in.)		DF/SP Allowable Loads				Installed Cost Index (ICI)	Code Ref.
			W	H	B	TF	Header	Joist	Uplift (160)	Floor (100)	Snow (115)	Roof (125)		
Sawn Lumber Sizes														
DBL 2x16	WP216-2	12	3⅛	15	2½	2³⁄₁₆	(4) 0.148 x 2½	(2) 0.148 x 3	—	2,985	2,985	2,985	Lowest	IBC, FL, LA
	HU216-2TF	12	3⅛	15	2½	2½	(20) 0.162 x 3½	(8) 0.148 x 3	1,400	4,050	4,050	4,050	34%	
TPL 2x16	HU216-3TF	12	4¹¹⁄₁₆	15	2½	2½	(20) 0.162 x 3½	(8) 0.162 x 3½	1,640	4,050	4,050	4,050	Lowest	
3x4	HU34TF	12	2⁹⁄₁₆	3⁷⁄₁₆	2½	2½	(8) 0.162 x 3½	(2) 0.148 x 1½	370	2,050	2,050	2,050	*	
3x6	HU36TF	12	2⁹⁄₁₆	5⅜	2½	2½	(10) 0.162 x 3½	(4) 0.148 x 1½	705	2,785	2,785	2,785	*	
3x8	HU38TF	12	2⁹⁄₁₆	7⅛	2½	2½	(12) 0.162 x 3½	(4) 0.148 x 1½	640	3,265	3,265	3,265	*	
3x10	BA310	14	2⁹⁄₁₆	9⅛	3	2½	(16) 0.162 x 3½	(8) 0.148 x 3	1,275	4,720	4,720	4,720	*	
	HU310TF	12	2⁹⁄₁₆	9⅛	2½	2½	(14) 0.162 x 3½	(6) 0.148 x 1½	1,220	3,945	3,945	3,945	*	
3x12	WP312	12	2⁹⁄₁₆	11⅛	2½	2³⁄₁₆	(4) 0.148 x 2½	(2) 0.148 x 1½	—	2,985	2,985	2,985	*	
	HU312TF	12	2⁹⁄₁₆	11	2½	2½	(16) 0.162 x 3½	(6) 0.148 x 1½	1,140	4,590	4,590	4,590	*	
3x14	WP314	12	2⁹⁄₁₆	13¹⁄₁₆	2½	2³⁄₁₆	(4) 0.148 x 2½	(2) 0.148 x 1½	—	2,985	2,985	2,985	*	
	HU314TF	12	2⁹⁄₁₆	13	2½	2½	(18) 0.162 x 3½	(8) 0.148 x 1½	1,065	4,030	4,030	4,030	*	
3x16	WP316	12	2⁹⁄₁₆	15	2½	2³⁄₁₆	(4) 0.148 x 2½	(2) 0.148 x 1½	—	2,985	2,985	2,985	*	
	HU316TF	12	2⁹⁄₁₆	15	2½	2½	(20) 0.162 x 3½	(8) 0.148 x 1½	1,125	4,050	4,050	4,050	*	
4x3	HU43TF	12	3⁹⁄₁₆	3	2½	2½	(8) 0.162 x 3½	(2) 0.148 x 3	330	2,600	2,600	2,600	*	—
4x4	HU44TF	12	3⁹⁄₁₆	3⁷⁄₁₆	2½	2½	(8) 0.162 x 3½	(2) 0.148 x 3	370	2,050	2,050	2,050	Lowest	IBC, FL, LA
4x6	HU46TF	12	3⁹⁄₁₆	5⅜	2½	2½	(10) 0.162 x 3½	(4) 0.148 x 3	815	2,785	2,785	2,785	28%	
	WP46	12	3⁹⁄₁₆	5⁷⁄₁₆	2½	2³⁄₁₆	(4) 0.148 x 2½	(2) 0.148 x 1½	—	2,985	2,985	2,985	*	
4x8	BA48 (Min.)	14	3⁹⁄₁₆	7⅛	3	2½	(16) 0.162 x 3½	(2) 0.148 x 1½	255	3,205	3,205	3,205	Lowest	
	BA48 (Max.)	14	3⁹⁄₁₆	7⅛	3	2½	(16) 0.162 x 3½	(8) 0.148 x 1½	1,275	4,720	4,720	4,720	7%	
	HU48TF	12	3⁹⁄₁₆	7⅛	2½	2½	(12) 0.162 x 3½	(4) 0.148 x 3	815	3,265	3,265	3,265	95%	
	WP48	12	3⁹⁄₁₆	7⅛	2½	2³⁄₁₆	(4) 0.148 x 2½	(2) 0.148 x 1½	—	2,985	2,985	2,985	*	
4x10	BA410 (Min.)	14	3⁹⁄₁₆	9⅛	3	2½	(16) 0.162 x 3½	(2) 0.148 x 1½	255	3,205	3,205	3,205	Lowest	
	BA410 (Max.)	14	3⁹⁄₁₆	9⅛	3	2½	(16) 0.162 x 3½	(8) 0.148 x 1½	1,275	4,720	4,720	4,720	7%	
	HU410TF	12	3⁹⁄₁₆	9⅛	2½	2½	(14) 0.162 x 3½	(6) 0.148 x 3	1,220	3,945	3,945	3,945	86%	
	HWPH410	12	3⁹⁄₁₆	9⅛	3	2½	(9) 0.162 x 3½	(10) 0.148 x 1½	1,535	3,955	3,955	3,955	*	
	HB410	7	3⁹⁄₁₆	9⅛	3½	3	(22) 0.162 x 3½	(10) 0.162 x 3½	2,075	5,395	5,395	5,395	*	
	HGLT4 H = 9⅛	7	3⁹⁄₁₆	7½ to 33	6	2½	(18) N54A	(6) N54A	2,450	10,720	10,720	10,720	*	
4x12	BA412 (Min.)	14	3⁹⁄₁₆	11	3	2½	(16) 0.162 x 3½	(2) 0.148 x 1½	255	3,870	3,870	3,870	Lowest	
	BA412 (Max.)	14	3⁹⁄₁₆	11	3	2½	(16) 0.162 x 3½	(8) 0.148 x 1½	1,275	4,720	4,720	4,720	6%	
	WP412	12	3⁹⁄₁₆	11⅛	2½	2³⁄₁₆	(4) 0.148 x 2½	(2) 0.148 x 3	—	2,985	2,985	2,985	32%	
	HU412TF	12	3⁹⁄₁₆	11	2½	2½	(16) 0.162 x 3½	(6) 0.148 x 3	1,220	4,590	4,590	4,590	84%	
	HPWH412	12	3⁹⁄₁₆	11⅛	3¼	2½	(9) 0.162 x 3½	(10) 0.148 x 1½	1,535	3,955	3,955	3,955	*	
	HB412	10	3⁹⁄₁₆	11⅛	3½	3	(22) 0.162 x 3½	(10) 0.162 x 3½	2,075	5,395	5,395	5,395	*	
	HGLT4 H = 11⅛	7	3⁹⁄₁₆	7½ to 33	6	2½	(18) N54A	(6) N54A	2,450	10,720	10,720	10,720	*	
4x14	WP414	12	3⁹⁄₁₆	13¹⁄₁₆	2½	2³⁄₁₆	(4) 0.148 x 2½	(2) 0.148 x 3	—	2,985	2,985	2,985	13%	
	HU414TF	12	3⁹⁄₁₆	13	2½	2½	(18) 0.162 x 3½	(8) 0.148 x 3	1,330	4,030	4,030	4,030	89%	
	HB414	10	3⁹⁄₁₆	13	3½	3	(22) 0.162 x 3½	(10) 0.162 x 3½	2,075	5,395	5,395	5,395	*	
	HPWH414	7	3⁹⁄₁₆	13¹⁄₁₆	3¼	2½	(12) 0.162 x 3½	(10) 0.148 x 1½	1,685	5,920	5,920	5,920	*	
	HGLT4 H = 13¹⁄₁₆	7	3⁹⁄₁₆	7 to 33	6	2½	(18) N54A	(6) N54A	2,450	10,720	10,720	10,720	*	
4x16	WP416	12	3⁹⁄₁₆	15¹⁄₁₆	2½	2³⁄₁₆	(4) 0.148 x 2½	(2) 0.148 x 3	—	2,985	2,985	2,985	Lowest	
	HU416TF	12	3⁹⁄₁₆	15	2½	2½	(20) 0.162 x 3½	(8) 0.148 x 3	1,400	4,050	4,050	4,050	81%	
	HB416	10	3⁹⁄₁₆	15	3½	3	(22) 0.162 x 3½	(10) 0.162 x 3½	2,075	5,395	5,395	5,395	*	
	HPWH416	7	3⁹⁄₁₆	15	3¼	2½	(12) 0.162 x 3½	(10) 0.148 x 1½	1,685	5,920	5,920	5,920	*	
	HGLT4 H = 15	7	3⁹⁄₁₆	7½ to 33	6	2½	(18) N54A	(6) N54A	2,450	10,720	10,720	10,720	*	

See footnotes on p. 133.

Codes: See p. 11 for Code Reference Key Chart

C-C-2021 ©2021 SIMPSON STRONG-TIE COMPANY INC.

Top-Flange Hangers – Solid Sawn Lumber (DF/SP)

SIMPSON Strong-Tie®

These products are available with additional corrosion protection. For more information, see p. 14.

Joist or Purlin Size	Model No.	Ga.	Dimensions				Fasteners (in.)		DF/SP Allowable Loads				Installed Cost Index (ICI)	Code Ref.
			W	H	B	TF	Header	Joist	Uplift (160)	Floor (100)	Snow (115)	Roof (125)		
Sawn Lumber Sizes														
6x6	WP66	12	5 9/16	5 7/16	2 1/2	2 5/16	(4) 0.148 x 2 1/2	(2) 0.148 x 3	—	2,985	2,985	2,985	*	IBC, FL, LA
	HU66TF	12	5 1/2	5 3/8	2 1/2	2 1/2	(10) 0.162 x 3 1/2	(4) 0.162 x 3 1/2	945	2,785	2,785	2,785	*	
	HWP66	12	5 1/2	5 3/8	3	2 1/5	(9) 0.162 x 3 1/2	(10) 0.148 x 1 1/2	1,535	3,955	3,955	3,955	*	
6x8	WP68	12	5 9/16	7 1/8	2 1/2	2 5/16	(4) 0.148 x 2 1/2	(2) 0.148 x 3	—	2,985	2,985	2,985	*	
	HU68TF	12	5 1/2	7 1/8	2 1/2	2 1/2	(12) 0.162 x 3 1/2	(4) 0.162 x 3 1/2	945	3,265	3,265	3,265	*	
	HWP68	12	5 5/8	7 1/8	3	2 1/2	(9) 0.162 x 3 1/2	(10) 0.148 x 1 1/2	1,535	3,955	3,955	3,955	*	
6x10	WP610	12	5 9/16	9 1/8	2 1/2	2 5/16	(4) 0.148 x 2 1/2	(2) 0.148 x 3	—	2,985	2,985	2,985	*	
	HU610TF	12	5 1/2	9 1/8	2 1/2	2 1/2	(14) 0.162 x 3 1/2	(6) 0.162 x 3 1/2	1,420	3,945	3,945	3,945	*	
	HWPH610	7	5 1/2	9 1/8	3 1/4	2 1/2	(12) 0.162 x 3 1/2	(10) 0.148 x 1 1/2	1,685	5,920	5,920	5,920	*	
	HB610	10	5 9/16	9 3/16	3 1/2	3	(22) 0.162 x 3 1/2	(10) 0.162 x 3 1/2	2,075	5,395	5,395	5,395	*	
	HGLT6 H = 9 1/8	7	5 9/16	7 1/2 to 33	6	2 1/2	(18) N54A	(6) N54A	2,450	10,720	10,720	10,720	*	
6x12	HWPH612	7	5 1/2	11 1/8	3 1/4	2 1/2	(12) 0.162 x 3 1/2	(10) 0.148 x 1 1/2	1,685	5,920	5,920	5,920	*	
	HU612TF	12	5 1/2	11	2 1/2	2 1/2	(16) 0.162 x 3 1/2	(6) 0.162 x 3 1/2	1,420	4,590	4,590	4,590	*	
	HB612	10	5 9/16	11 1/8	3 1/2	3	(22) 0.162 x 3 1/2	(10) 0.162 x 3 1/2	2,075	5,395	5,395	5,395	*	
	HGLT6 H = 11 1/8	7	5 9/16	7 1/2 to 33	6	2 1/2	(18) N54A	(6) N54A	2,450	10,720	10,720	10,720	*	
6x14	HWPH614	7	5 1/2	13 1/16	3 1/4	2 1/2	(12) 0.162 x 3 1/2	(10) 0.148 x 1 1/2	1,685	5,920	5,920	5,920	*	
	HU614TF	12	5 1/2	13	2 1/2	2 1/2	(18) 0.162 x 3 1/2	(8) 0.162 x 3 1/2	1,560	4,030	4,030	4,030	*	
	HB614	10	5 9/16	13	3 1/2	3	(22) 0.162 x 3 1/2	(10) 0.162 x 3 1/2	2,075	5,395	5,395	5,395	*	
	HGLT6 H = 13 1/16	7	5 9/16	7 1/2 to 33	6	2 1/2	(18) N54A	(6) N54A	2,450	10,720	10,720	10,720	*	
6x16	HWPH616	7	5 1/2	15	3 1/4	2 1/2	(12) 0.162 x 3 1/2	(10) 0.148 x 1 1/2	1,685	5,920	5,920	5,920	*	
	HU616TF	12	5 1/2	15	2 1/2	2 1/2	(20) 0.162 x 3 1/2	(8) 0.162 x 3 1/2	1,640	4,050	4,050	4,050	*	
	HB616	10	5 9/16	15	3 1/2	3	(22) 0.162 x 3 1/2	(10) 0.162 x 3 1/2	2,075	5,395	5,395	5,395	*	
	HGLT6 H = 15	7	5 9/16	7 1/2 to 33	6	2 1/2	(18) N54A	(6) N54A	2,450	10,720	10,720	10,720	*	
8x8	WP7.50 H = 7.25	12	7 1/2	7 1/2 to 30	2 1/2	2 3/16	(4) 0.148 x 2 1/2	(2) 0.148 x 3	—	2,985	2,985	2,985	*	
8x10	HB7.50X H = 9 3/16	10	7 1/2	8 to 28	3 1/2	3	(22) 0.162 x 3 1/2	(10) 0.162 x 3 1/2	2,075	5,395	5,395	5,395	*	
	HWPH810	7	7 1/2	9 3/16	3 1/4	2 1/2	(12) 0.162 x 3 1/2	(10) 0.148 x 1 1/2	1,685	5,920	5,920	5,920	*	
8x12	HB7.50X H = 11 1/8	10	7 1/2	8 to 28	3 1/2	3	(22) 0.162 x 3 1/2	(10) 0.162 x 3 1/2	2,075	5,395	5,395	5,395	*	
	HWPH812	7	7 1/2	11 1/8	3 1/4	2 1/2	(12) 0.162 x 3 1/2	(10) 0.148 x 1 1/2	1,685	5,920	5,920	5,920	*	
8x14	HB7.50X H = 13 1/16	10	7 1/2	8 to 28	3 1/2	3	(22) 0.162 x 3 1/2	(10) 0.162 x 3 1/2	2,075	5,395	5,395	5,395	*	
	HWPH814	7	7 1/2	13 1/16	3 1/4	2 1/2	(12) 0.162 x 3 1/2	(10) 0.148 x 1 1/2	1,685	5,920	5,920	5,920	*	
8x16	HB7.50X H = 15	10	7 1/2	8 to 28	3 1/2	3	(22) 0.162 x 3 1/2	(10) 0.162 x 3 1/2	2,075	5,395	5,395	5,395	*	
	HWPH816	7	7 1/2	15	3 1/4	2 1/2	(12) 0.162 x 3 1/2	(10) 0.148 x 1 1/2	1,685	5,920	5,920	5,920	*	

1. Uplift loads have been increased for wind or earthquake loading with no further increase allowed. For normal loading applications such as cantilever construction, refer to Simpson Strong-Tie® Connector Selector® software or conservatively divide the uplift load by 1.6.
2. N54A fasteners are supplied with hangers.
3. Uplift loads are based on DF/SP lumber. For SPF/HF, use 0.86 x DF/SP uplift load.
4. HGLT information can be found on pp. 170–171.
5. Hangers with an "*" do not have an Installed Cost Index.
6. **Fasteners:** Nail dimensions in the table are listed diameter by length. See pp. 21–22 for fastener information.

Codes: See p. 11 for Code Reference Key Chart

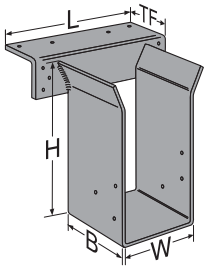

C-C-2021 ©2021 SIMPSON STRONG-TIE COMPANY INC.

Top-Flange Hangers – Solid Sawn Lumber (SPF/HF)

These products are available with additional corrosion protection. For more information, see p. 14.

Joist or Purlin Size	Model No.	Ga.	Dimensions (in.)				Fasteners (in.)		SPF/HF Allowable Loads			
			W	H	B	TF	Header	Joist	Uplift (160)	Floor (100)	Snow (115)	Roof (125)
Sawn Lumber Sizes												
2x4	PF24	18	1 9/16	3 3/8	1 1/2	1 1/16	(2) 0.148 x 3	(2) 0.148 x 3	230	650	660	660
	HU24TF	12	1 9/16	3 7/16	2 1/4	2 1/2	(6) 0.162 x 3 1/2	(2) 0.148 x 1 1/2	350	930	930	930
2x6	PF26	18	1 9/16	5 3/8	1 1/2	1 1/16	(2) 0.148 x 3	(2) 0.148 x 3	455	805	850	880
	JB26	18	1 9/16	5 3/8	1 1/2	1 5/16	(4) 0.148 x 3	(2) Prong	—	815	815	815
	LB26	14	1 9/16	5 3/8	1 1/2	1 1/2	(4) 0.162 x 3 1/2	(2) 0.148 x 1 1/2	325	860	860	860
	HU26TF	12	1 9/16	5 3/8	2 1/4	2 1/2	(10) 0.162 x 3 1/2	(4) 0.148 x 1 1/2	695	1,000	1,000	1,000
DBL 2x6	WP26-2	12	3 1/8	5 3/8	2 1/2	2 3/16	(4) 0.148 x 2 1/2	(2) 0.148 x 3	—	2,230	2,230	2,230
2x8	JB28	18	1 9/16	7 1/4	1 1/2	1 5/16	(4) 0.148 x 3	(2) Prong	—	820	820	820
	LB28	14	1 9/16	7 1/4	1 1/2	1 1/2	(4) 0.162 x 3 1/2	(2) 0.148 x 1 1/2	325	790	790	790
DBL 2x8	WP28-2	12	3 1/8	7 1/8	2 1/2	2 3/16	(4) 0.148 x 2 1/2	(2) 0.148 x 3	—	2,230	2,230	2,230
2x10	JB210A	18	1 9/16	9 3/16	2	1 7/16	(6) 0.162 x 3 1/2	(2) 0.148 x 1 1/2	270	1,190	1,190	1,190
	LB210AZ	14	1 9/16	9 3/16	2	1 7/16	(6) 0.162 x 3 1/2	(2) 0.148 x 1 1/2	325	1,330	1,330	1,330
DBL 2x10	WP210-2	12	3 1/8	9 1/8	2 1/2	2 3/16	(4) 0.148 x 2 1/2	(2) 0.148 x 3	—	2,230	2,230	2,230
2x12	JB212A	18	1 9/16	11 1/8	2	1 7/16	(6) 0.162 x 3 1/2	(2) 0.148 x 1 1/2	270	1,190	1,190	1,190
	LB212AZ	14	1 9/16	11 1/8	2	1 7/16	(6) 0.162 x 3 1/2	(2) 0.148 x 1 1/2	325	1,330	1,330	1,330
DBL 2x12	WP212-2	12	3 1/8	11	2 1/2	2 3/16	(4) 0.148 x 2 1/2	(2) 0.148 x 3	—	2,230	2,230	2,230
2x14	JB214A	18	1 9/16	13 1/8	2	1 7/16	(6) 0.162 x 3 1/2	(2) 0.148 x 1 1/2	270	1,190	1,190	1,190
	LB214AZ	14	1 9/16	13 1/8	2	1 7/16	(6) 0.162 x 3 1/2	(2) 0.148 x 1 1/2	325	1,330	1,330	1,330
DBL 2x14	WP214-2	12	3 1/8	13	2 1/2	2 3/16	(4) 0.148 x 2 1/2	(2) 0.148 x 3	—	2,230	2,230	2,230
2x16	LB216	14	1 9/16	15 1/8	2	1 1/2	(4) 0.162 x 3 1/2	(2) 0.148 x 1 1/2	325	945	945	945
DBL 2x16	WP216-2	12	3 1/8	15	2 1/2	2 3/16	(4) 0.148 x 2 1/2	(2) 0.148 x 3	—	2,230	2,230	2,230
3x12	WP312	12	2 9/16	11 1/8	2 1/2	2 3/16	(4) 0.148 x 2 1/2	(2) 0.148 x 1 1/2	—	2,230	2,230	2,230
3x14	WP314	12	2 9/16	13 1/16	2 1/2	2 3/16	(4) 0.148 x 2 1/2	(2) 0.148 x 1 1/2	—	2,230	2,230	2,230
3x16	WP316	12	2 9/16	15	2 1/2	2 3/16	(4) 0.148 x 2 1/2	(2) 0.148 x 1 1/2	—	2,230	2,230	2,230
4x6	WP46	12	3 9/16	5 7/16	2 1/2	2 3/16	(4) 0.148 x 2 1/2	(2) 0.148 x 1 1/2	—	2,230	2,230	2,230
4x8	BA48 (Min.)	14	3 9/16	7 1/8	3	2 1/2	(16) 0.162 x 3 1/2	(2) 0.148 x 1 1/2	225	2,660	2,660	2,660
	BA48 (Max.)	14	3 9/16	7 1/8	3	2 1/2	(16) 0.162 x 3 1/2	(8) 0.148 x 1 1/2	1,110	4,005	4,005	4,005
	WP48	12	3 9/16	7 1/8	2 1/2	2 3/16	(4) 0.148 x 2 1/2	(2) 0.148 x 1 1/2	—	2,230	2,230	2,230
4x10	BA410 (Min.)	14	3 9/16	9 1/8	3	2 1/2	(16) 0.162 x 3 1/2	(2) 0.148 x 1 1/2	225	2,660	2,660	2,660
	BA410 (Max.)	14	3 9/16	9 1/8	3	2 1/2	(16) 0.162 x 3 1/2	(8) 0.148 x 1 1/2	1,110	4,005	4,005	4,005
	HWPH410	12	3 9/16	9 1/8	3	2 1/2	(9) 0.162 x 3 1/2	(10) 0.148 x 1 1/2	1,535	3,955	3,955	3,955
4x12	BA412 (Min.)	14	3 9/16	11	3	2 1/2	(16) 0.162 x 3 1/2	(2) 0.148 x 1 1/2	225	3,095	3,095	3,095
	BA412 (Max.)	14	3 9/16	11	3	2 1/2	(16) 0.162 x 3 1/2	(8) 0.148 x 1 1/2	1,110	4,005	4,005	4,005
	HWPH412	12	3 9/16	11 1/8	3	2 1/2	(9) 0.162 x 3 1/2	(10) 0.148 x 1 1/2	1,535	3,955	3,955	3,955

See footnotes on p. 135.

C-C-2021 ©2021 SIMPSON STRONG-TIE COMPANY INC.

Top-Flange Hangers – Solid Sawn Lumber (SPF/HF)

SIMPSON Strong-Tie

These products are available with additional corrosion protection. For more information, see p. 14.

Joist or Purlin Size	Model No.	Ga.	Dimensions (in.)				Fasteners (in.)		SPF/HF Allowable Loads			
			W	H	B	TF	Header	Joist	Uplift (160)	Floor (100)	Snow (115)	Roof (125)
Sawn Lumber Sizes												
4x14	WP414	12	3 9/16	13 1/16	2 1/2	2 3/16	(4) 0.148 x 2 1/2	(2) 0.148 x 3	—	2,230	2,230	2,230
	HWPH414	7	3 9/16	13 1/16	3 1/4	2 1/2	(12) 0.162 x 3 1/2	(10) 0.148 x 1 1/2	1,450	4,740	4,740	4,740
4x16	WP416	12	3 9/16	15 1/16	2 1/2	2 3/16	(4) 0.148 x 2 1/2	(2) 0.148 x 3	—	2,230	2,230	2,230
	HWPH416	7	3 9/16	15	3 1/4	2 1/2	(12) 0.162 x 3 1/2	(10) 0.148 x 1 1/2	1,450	4,740	4,740	4,740
6x6	WP66	12	5 9/16	5 7/16	2 1/2	2 5/16	(4) 0.148 x 2 1/2	(2) 0.148 x 3	—	2,230	2,230	2,230
	HWP66	11	5 1/2	5 3/8	3	2 1/2	(4) 0.148 x 3	(2) 0.148 x 3	—	3,235	3,235	3,235
6x8	WP68	12	5 9/16	7 1/8	2 1/2	2 5/16	(4) 0.148 x 2 1/2	(2) 0.148 x 3	—	2,230	2,230	2,230
	HWPH68	12	5 1/2	7 1/8	3 1/4	2 1/2	(9) 0.162 x 3 1/2	(10) 0.148 x 1 1/2	1,535	3,955	3,955	3,955
6x10	WP610	12	5 9/16	9 1/8	2 1/2	2 5/16	(4) 0.148 x 2 1/2	(2) 0.148 x 3	—	2,230	2,230	2,230
	HB610	10	5 9/16	9 3/16	3 1/2	3	(22) 0.162 x 3 1/2	(10) 0.162 x 3 1/2	1785	3,820	3,820	3,820
	HWPH610	7	5 1/2	9 1/8	3 1/4	2 1/2	(12) 0.162 x 3 1/2	(10) 0.148 x 1 1/2	1,450	4,740	4,740	4,740
6x12	HB612	10	5 9/16	11 1/8	3 1/2	3	(22) 0.162 x 3 1/2	(10) 0.162 x 3 1/2	1,785	3,820	3,820	3,820
	HWPH612	7	5 1/2	11 1/8	3 1/4	2 1/2	(12) 0.162 x 3 1/2	(10) 0.148 x 1 1/2	1,450	4,740	4,740	4,740
6x14	HB614	10	5 9/16	13	3.5	3	(22) 0.162 x 3 1/2	(10) 0.162 x 3 1/2	1785	3,820	3,820	3,820
	HWPH614	7	5 1/2	13 1/16	3 1/4	2 1/2	(12) 0.162 x 3 1/2	(10) 0.148 x 1 1/2	1,450	4,740	4,740	4,740
6x16	HB616	10	5 9/16	15	3 1/2	3	(22) 0.162 x 3 1/2	(10) 0.162 x 3 1/2	1,785	3,820	3,820	3,820
	HWPH616	7	5 1/2	15	3 1/4	2 1/2	(12) 0.162 x 3 1/2	(10) 0.148 x 1 1/2	1,450	4,740	4,740	4,740
8x8	WP7.50 H = 7.25	12	7 1/2	7 1/2 to 30	2 1/2	2 3/16	(4) 0.148 x 2 1/2	(2) 0.148 x 1 1/2	—	2,230	2,230	2,230
8x10	HB7.50X H = 9 3/16	10	7 1/2	8 to 28	3 1/2	3	(22) 0.162 x 3 1/2	(10) 0.162 x 3 1/2	1,785	3,820	3,820	3,820
	HWPH810	7	7 1/2	9 3/16	3 1/4	2 1/2	(12) 0.162 x 3 1/2	(10) 0.148 x 1 1/2	1,450	4,740	4,740	4,740
8x12	HB7.50X H = 11 1/8	10	7 1/2	8 to 28	3 1/2	3	(22) 0.162 x 3 1/2	(10) 0.162 x 3 1/2	1,785	3,820	3,820	3,820
	HWPH812	7	7 1/2	11 1/8	3 1/4	2 1/2	(12) 0.162 x 3 1/2	(10) 0.148 x 1 1/2	1,450	4,740	4,740	4,740
8x14	HB7.50X H = 13 1/16	10	7 1/2	8 to 28	3 1/2	3	(22) 0.162 x 3 1/2	(10) 0.162 x 3 1/2	1,785	3,820	3,820	3,820
	HWPH814	7	7 1/2	13 1/16	3 1/4	2 1/2	(12) 0.162 x 3 1/2	(10) 0.148 x 1 1/2	1,450	4,740	4,740	4,740
8x16	HB7.50X H = 15	10	7 1/2	8 to 28	3 1/2	3	(22) 0.162 x 3 1/2	(10) 0.162 x 3 1/2	1,785	3,820	3,820	3,820
	HWPH816	7	7 1/2	15	3 1/4	2 1/2	(12) 0.162 x 3 1/2	(10) 0.148 x 1 1/2	1,450	4,740	4,740	4,740

1. Uplift loads have been increased for wind or earthquake loading with no further increase allowed. For normal loading applications such as cantilever construction, refer to Simpson Strong-Tie® Connector Selector® software or conservatively divide the uplift load by 1.6.
2. **Fasteners:** Nail dimensions are listed diameter by length. See pp. 21–22 for fastener information.

C-C-2021 ©2021 SIMPSON STRONG-TIE COMPANY INC.

PF/PFB/PFDB

Post Frame Top-Flange Hangers

The PF series hangers have been designed to accommodate collated 0.148" x 1½" nails as well as 0.148" x 3" nails. The PFB and PFDB have dome-shaped joist nail holes that guide nails into the proper installation angle. The design also features a folded seat that raises the 2x joist very slightly above the seat radius to enable a tighter connection to the back of the hanger. For saddle hangers, PFDB and PFDSB are for solid sawn lumber carrying members, and PFDL is for LVL carrying members.

Features:

- Installation prongs make setting the hanger quick and easy
- Sizes are available for 2x8 joists

Material: PF — 18 gauge, PFB/PFDB — 20 gauge

Finish: Galvanized. Some products available in ZMAX® coating; See Corrosion Information, pp. 12–15.

Installation:

- Use all specified fasteners; see General Notes.
- 0.148" x 3" purlin nails must be driven at an angle through the purlin into the header. Combine with top nails to achieve table loads.
- 0.148" x 1½" purlin nails must be driven at an angle into the purlin but do not penetrate into the header. Combine with back face fasteners and top nails to achieve table loads.

Codes: See p. 11 for Code Reference Key Chart

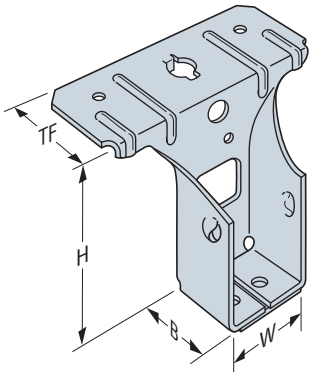

PF24B
(others similar)

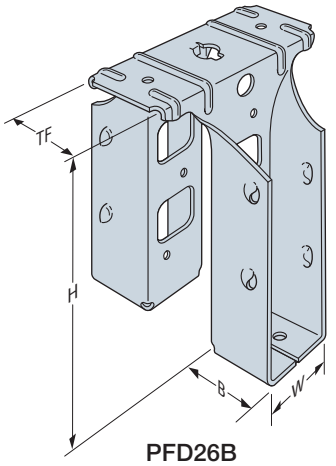

PFD26B
(others similar)

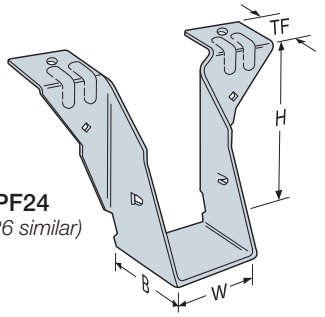

PF24
(PF26 similar)

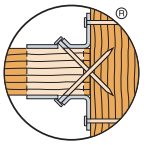

Double-Shear Nailing
(top view)

These products are available with additional corrosion protection. For more information, see p. 14.

SD Many of these products are approved for installation with Strong-Drive® SD Connector screws. See pp. 348–352 for more information.

Model No.	Dimensions (in.)				Fasteners (in.)			DF/SP Allowable Loads					SPF/HF Allowable Loads					Code Ref.
	W	H	B	TF	Top	Face	Joist	Uplift (160)	Floor (100)	Snow (115)	Roof (125)	Wind (160)	Uplift (160)	Floor (100)	Snow (115)	Roof (125)	Wind (160)	
PF24	1 9/16	3 3/8	1 1/2	1 1/16	(2) 0.148 x 3	—	(2) 0.148 x 3	300	1,255	1,255	1,255	1,255	230	650	660	660	660	IBC, FL, LA
PF24B	1 9/16	3 3/8	1 1/4	1 1/2	(2) 0.148 x 1 1/2	(2) 0.148 x 1 1/2	(2) 0.148 x 1 1/2	345	965	965	965	965	295	785	785	785	785	
					(2) 0.148 x 3	—	(2) 0.148 x 3	375	1,005	1,005	1,005	1,005	290	680	680	680	680	
PFD24B	1 9/16	3 3/8	1 1/4	1 9/16	(2) 0.148 x 1 1/2	(4) 0.148 x 1 1/2	(4) 0.148 x 1 1/2	290	985	985	985	985	230	830	830	830	830	
					(2) 0.148 x 3	—	(4) 0.148 x 3	300	1,090	1,090	1,090	1,090	210	830	860	880	945	
PFDS24B	1 9/16	3 3/8	1 1/4	3 3/16	(4) 0.148 x 1 1/2	(4) 0.148 x 1 1/2	(4) 0.148 x 1 1/2	290	985	985	985	985	230	830	830	830	830	
					(4) 0.148 x 3	—	(4) 0.148 x 3	300	1,090	1,090	1,090	1,090	210	830	860	880	945	
PF26	1 9/16	5 3/8	1 1/2	1 1/16	(2) 0.148 x 3	—	(2) 0.148 x 3	300	1,255	1,255	1,255	1,255	455	805	850	880	905	
PF26B	1 9/16	5 3/8	1 1/4	1 1/2	(2) 0.148 x 1 1/2	(3) 0.148 x 1 1/2	(4) 0.148 x 1 1/2	545	1,235	1,235	1,235	1,235	470	1,005	1,005	1,005	1,005	
					(2) 0.148 x 3	—	(4) 0.148 x 3	625	1,200	1,200	1,200	1,200	480	810	810	810	810	
PFD26B	1 9/16	5 3/8	1 1/4	1 9/16	(2) 0.148 x 1 1/2	(6) 0.148 x 1 1/2	(8) 0.148 x 1 1/2	525	1,235	1,235	1,235	1,235	420	1,030	1,040	1,040	1,040	
					(2) 0.148 x 3	—	(8) 0.148 x 3	650	1,290	1,290	1,290	1,290	465	1,030	1,090	1,125	1,255	
PFDS26B	1 9/16	5 3/8	1 1/4	3 3/16	(4) 0.148 x 1 1/2	(6) 0.148 x 1 1/2	(8) 0.148 x 1 1/2	525	1,235	1,235	1,235	1,235	420	1,030	1,040	1,040	1,040	
					(4) 0.148 x 3	—	(8) 0.148 x 3	650	1,290	1,290	1,290	1,290	465	1,030	1,090	1,125	1,255	
PFDL26B	1 9/16	5 1/4	1 1/4	1 13/16	(2) 0.148 x 1 1/2	(6) 0.148 x 1 1/2	(8) 0.148 x 1 1/2	525	1,235	1,235	1,235	1,235	420	1,030	1,040	1,040	1,040	—
					(2) 0.148 x 3	—	(8) 0.148 x 3	670	1,345	1,350	1,350	1,350	465	1,030	1,090	1,125	1,255	
PF28B	1 9/16	7 1/8	1 1/4	1 1/2	(2) 0.148 x 1 1/2	(4) 0.148 x 1 1/2	(6) 0.148 x 1 1/2	675	1,335	1,335	1,335	1,335	580	1,085	1,085	1,085	1,085	IBC, FL, LA
					(2) 0.148 x 3	—	(6) 0.148 x 3	850	1,580	1,650	1,650	1,650	655	1,115	1,115	1,115	1,115	
PFD28B	1 9/16	7 1/8	1 1/4	1 9/16	(2) 0.148 x 1 1/2	(8) 0.148 x 1 1/2	(12) 0.148 x 1 1/2	810	1,370	1,370	1,370	1,370	680	1,160	1,160	1,160	1,160	
					(2) 0.148 x 3	—	(12) 0.148 x 3	1,050	1,580	1,680	1,745	1,975	730	1,230	1,315	1,370	1,570	
PFDS28B	1 9/16	7 1/8	1 1/4	3 3/16	(4) 0.148 x 1 1/2	(8) 0.148 x 1 1/2	(12) 0.148 x 1 1/2	895	1,370	1,370	1,370	1,370	730	1,160	1,160	1,160	1,160	
					(4) 0.148 x 3	—	(12) 0.148 x 3	1,050	1,580	1,680	1,745	1,975	730	1,230	1,315	1,370	1,570	
PFDL28B	1 9/16	7	1 1/4	1 13/16	(2) 0.148 x 1 1/2	(8) 0.148 x 1 1/2	(12) 0.148 x 1 1/2	810	1,370	1,370	1,370	1,370	680	1,160	1,160	1,160	1,160	—
					(2) 0.148 x 3	—	(12) 0.148 x 3	1,050	1,580	1,680	1,745	1,970	730	1,230	1,315	1,370	1,570	

1. Uplift loads have been increased for earthquake or wind loading with no further increase allowed. Reduce where other loads govern.
2. **Fasteners:** Nail dimensions are listed diameter by length. See pp. 21–22 for fastener information.

C-C-2021 ©2021 SIMPSON STRONG-TIE COMPANY INC.

HH

Header Hanger

For fast, accurate installation of door and window headers and other cross members. HH header hangers can speed up the job, strengthen the frame, and eliminate the need for trimmers.

Material: 16 gauge

Finish: Galvanized

Installation:

- Use all specified fasteners; see General Notes
- Attachment to 2x studs will result in two round holes not being filled in the studs and load reductions as noted in table

Codes: See p. 11 for Code Reference Key Chart

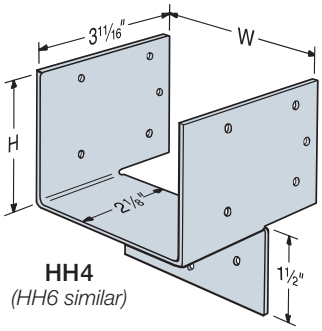

HH4
(HH6 similar)

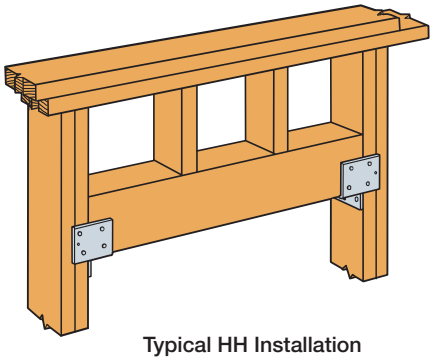

Typical HH Installation

Model No.	Dimensions (in.) W	Dimensions (in.) H	Min. Post Size	Fasteners (in.) Stud	Fasteners (in.) Header	DF/SP Allowable Loads F_1 (100)	F_1 (115)	F_1 (125)	F_2 (160)	F_3 (160)	F_4 (160)	Code Ref.
HH4	3½	2 13/16	2x	(7) 0.148 x 1½	(4) 0.148 x 1½	850	965	1,035	—	540	625	IBC, FL, LA
			Double 2x	(7) 0.162 x 2½	(4) 0.162 x 2½	1,005	1,140	1,230	—	720	965	
			3x	(9) 0.162 x 3½	(4) 0.162 x 3½	1,295	1,470	1,585	675	720	965	
HH6	5½	5⅛	2x	(10) 0.148 x 1½	(6) 0.148 x 1½	1,215	1,375	1,480	—	1,085	970	
			Double 2x	(10) 0.162 x 2½	(6) 0.162 x 2½	1,440	1,630	1,760	—	1,045	1,605	
			3x	(12) 0.162 x 3½	(6) 0.162 x 3½	1,725	1,955	2,110	980	1,045	1,605	

1. Loads have been increased for wind or earthquake loading, with no further increase allowed. Reduce where other loads govern.
2. For 3x posts, 0.162" x 2½" nails may be substituted with no reduction in load.
3. For SPF/HF lumber, use 0.86 x DF/SP allowable loads.
4. **Fasteners:** Nail dimensions are listed diameter by length. See pp. 21–22 for fastener information.

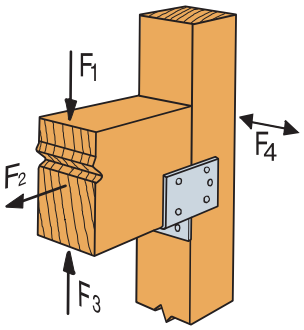

HH Load Directions

RR

Ridge Rafter Connector

An interlock provides alignment control and correct nailing locations. For a rafter-to-face connector, flatten the top flange into the face plane. The RR may be used with rafters sloped up to 30°.

Material: 18 gauge

Finish: Galvanized

Installation:

- Use all specified fasteners; see General Notes

Codes: See p. 11 for Code Reference Key Chart

SD Many of these products are approved for installation with Strong-Drive® SD Connector screws. See pp. 348–352 for more information.

Model No.	Min. Rafter Size	Fasteners (in.) Header	Fasteners (in.) Rafter	Uplift (160)	Allowable Loads[1] DF/SP Floor (100)	Allowable Loads[1] DF/SP Roof (125)	Code Ref.
RR	2x6	(4) 0.148 x 1½	(4) 0.148 x 1½	130	330	330	IBC, FL, LA

1. Roof loads are 125% of floor loads unless limited by other criteria. Floor loads may be adjusted for load durations according to the code provided they do not exceed those in the roof column.
2. **Fasteners:** Nail dimensions are listed diameter by length. See pp. 21–22 for fastener information.

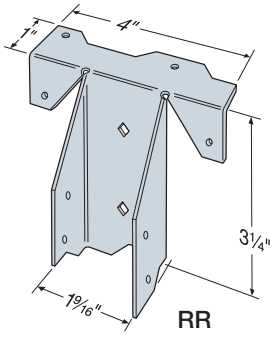

RR

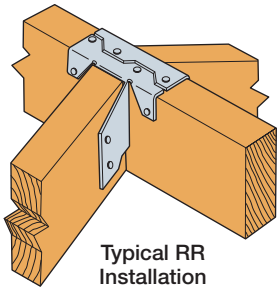

Typical RR Installation

C-C-2021 ©2021 SIMPSON STRONG-TIE COMPANY INC.

HFN/F

Panelized Construction Hangers

The HF24N, HF26N, HF34N and HF36N hangers are designed for panels or components using jigs or similar devices for precision fabrication. Grip-groove feature provides positive lock into the 2x or 3x member without nailing. F series panel hangers are engineered components for panelized construction only.

Material: 18 gauge

Finish: Galvanized. Some products available in ZMAX® coating. See Corrosion Information, pp. 12–15.

Standard Installation:

- Use all specified fasteners; see General Notes.
- On the F-series hanger, the diamond hole nail is non-structural and does not contribute to the load.
- For additional information on retrofit options see flier F-C-RUZNRUZ at **strongtie.com**.

Panelized Installation:

- Installing two nails through sheathing in middle of hanger achieves full load. See illustrations for fastener location requirements. See technical bulletin T-C-HFHANGER at **strongtie.com** for alternate nailing and allowable load adjustments.

Codes: See p. 11 for Code Reference Key Chart

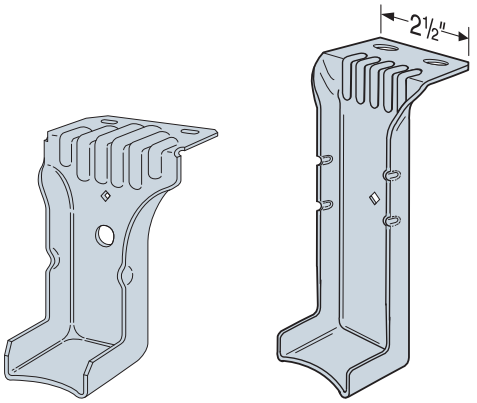

HF24N
(HF34N similar)

HF26N
(HF36N similar)
Dimples hold joist securely in place.

These products are available with additional corrosion protection. For more information, see p. 14.

Model No.	Joist Size	Dimensions (in.)			Header Fasteners (in.)	Allowable Roof Loads (115/125)	Code Ref.
		W	H	TF			
HF24N	2x4	1 9/16	3 3/8	1 1/4	(2) 0.148 x 2 1/8	580	IBC, LA
HF26N	2x6	1 9/16	5 3/8	1 1/4	(2) 0.148 x 2 1/8	635	
HF34N	3x4	2 9/16	3 3/8	1 1/4	(2) 0.148 x 2 1/8	690	
HF36N	3x6	2 9/16	5 3/8	1 1/4	(2) 0.148 x 2 1/8	725	
F26-2	(2) 2x6	3 1/4	5 3/8	1 3/16	(2) 0.148 x 3	675	
F44Z	4x4	3 9/16	3 7/16	1 1/2	(2) 0.148 x 3	765	
F46Z	4x6	3 9/16	5 3/8	1 7/16	(2) 0.148 x 3	675	

1. 0.148" x 3" nails can be used for specified 0.148" x 2 1/8" nails.
2. **Fasteners:** Nail dimensions are listed diameter by length. See pp. 21–22 for fastener information.

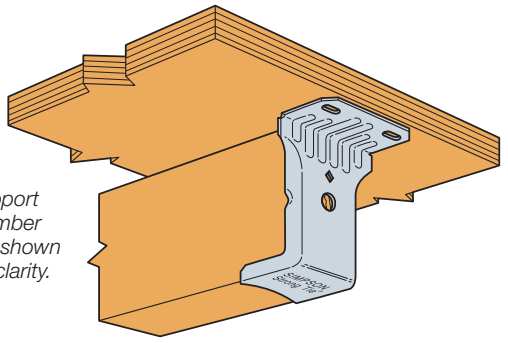

Typical HF24N Installation
(HF34N similar)

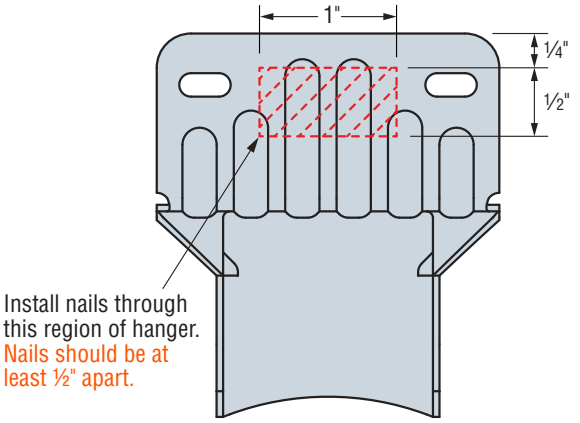

Panelized Installation Nailing Zone

C-C-2021 ©2021 SIMPSON STRONG-TIE COMPANY INC.

HFN/F

Panelized Construction Hangers (cont.)

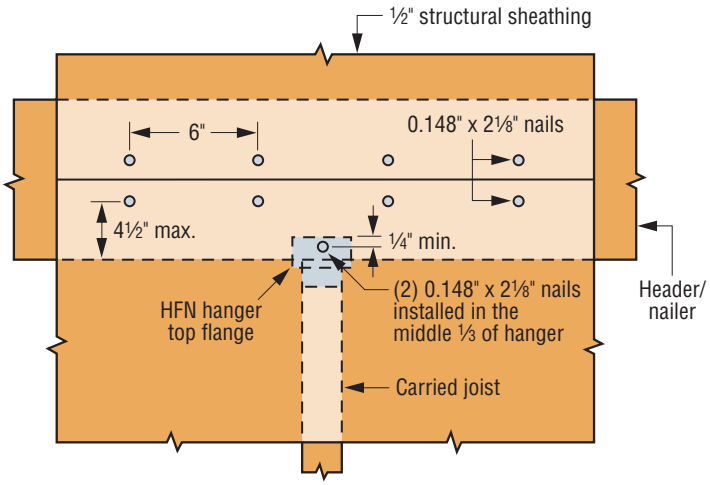

HFN Panelized Installation
(plan view)

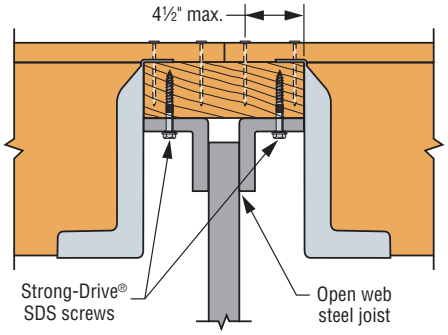

Double HF26N Nailer Installation on Hybrid Truss

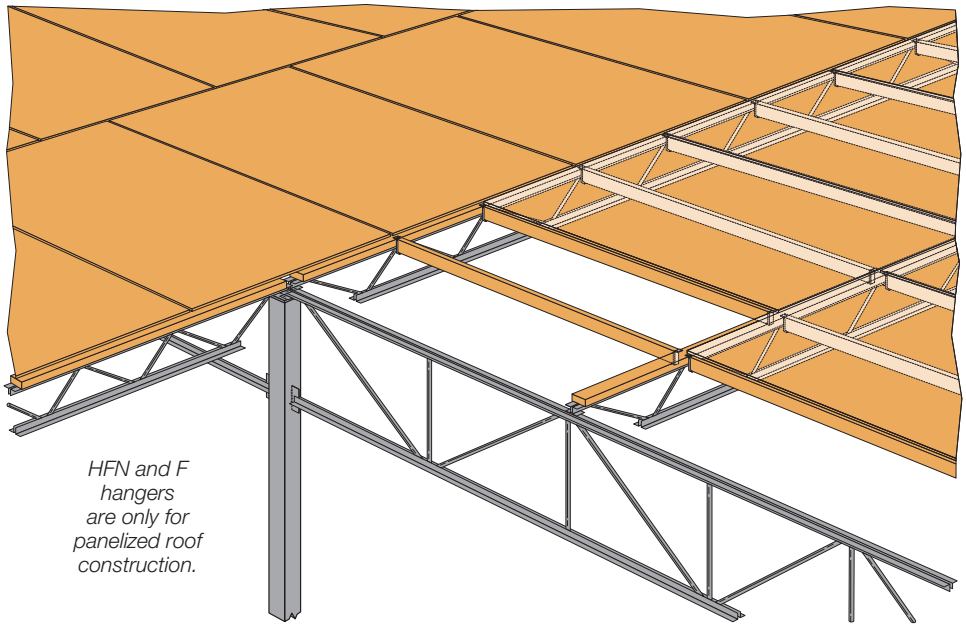

Typical Hybrid Panelized Roof System

C-C-2021 ©2021 SIMPSON STRONG-TIE COMPANY INC.

IUS/MIU

I-Joist Hangers

This product is preferable to similar connectors because of (a) easier installation, (b) higher loads, (c) lower installed cost, or a combination of these features.

The IUS is a hybrid hanger that incorporates the advantages of the face-mount and top-mount hanger. Installation is fast with the Strong-Grip™ seat, easy-to-reach face nails and self-jigging locator tabs.

The MIU series hangers are designed for commercial and high-load I-joist applications without requiring web stiffeners. The MIU features Positive Angle Nailing (PAN), which minimizes splitting of the flanges while permitting time-saving nailing from a better angle.

Material: IUS — 18 gauge; MIU — 16 gauge

Finish: Galvanized

Uplift Loads:

- Models have optional triangle joist nail holes for additional uplift. Properly attached web stiffeners are required.
- MIU — add four additional 0.148" x 1½" joist nails for a total uplift load of 975 lb.
- IUS — add web stiffeners and two 0.148" x 1½" joist nails in the triangle holes for a total uplift of 365 lb.

Installation:

- Use all specified fasteners. Verify that the header can take the required fasteners specified in the table. See pp. 95–96 for more installation information.
- IUS — fasten hanger to header. Position I-joist into hanger and snap into place. No joist nailing required. Some IUS models have triangle and round header nail holes. To achieve max. download, fill both round and triangle holes.
- IUS — Locator tabs are not structural. They may be bent back to adjust for hanger placement.
- IUS — for rimboard applications see technical bulletin T-C-RIMBDHGR at **strongtie.com**.
- IUS — I-joists with web stiffeners or rectangular sections can be used with the installation of (2) 0.148" x 1½" nails into the optional triangle joist nails.
- IUS — web stiffeners are not required with I-joists when the top flange is laterally supported by the sides of the hanger unless required by I-joist manufacturer.

Options:

- These hangers cannot be modified. However, these models will normally accommodate a skew of up to 5°. For sloped joists up to ¼:12 there is no reduction; between ¼:12 and up to ½:12, tests show a 10% reduction in ultimate hanger strength. Local crushing of the bottom flange or excessive deflection may be limiting; check with joist manufacturer for specific limitations on bearing of this type.

Codes: See p. 11 for Code Reference Key Chart

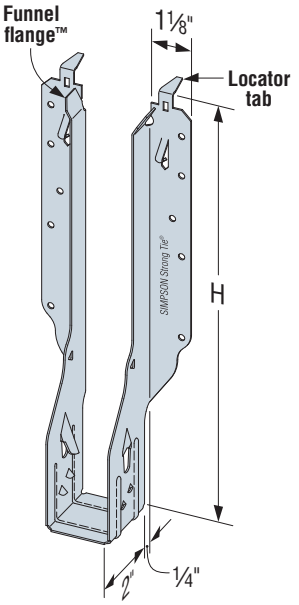

IUS

(some IUS models have triangle holes in header flanges for min./max. nailing)

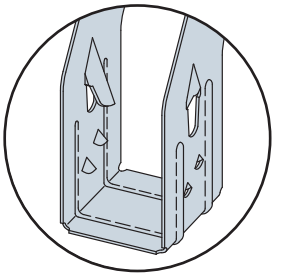

The Strong-Grip™ seat secures I-joists in position without joist nails.

Avoid a Misinstallation

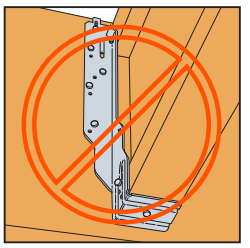

Do not make your own holes. Do not nail the bottom flange.

IUS Installation Sequence

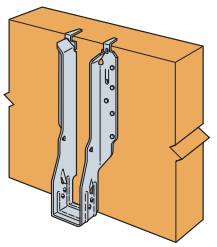

Step 1
Attach the IUS to the header.

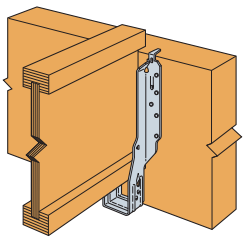

Step 2
Slide the I-joist downward into the IUS until it rests above the large teardrop.

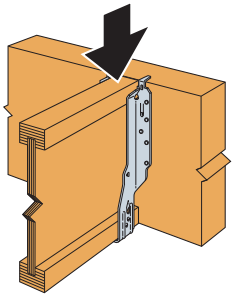

Step 3
Firmly push or snap I-joist fully into the seat of the IUS.

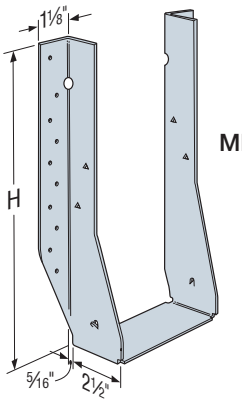

MIU

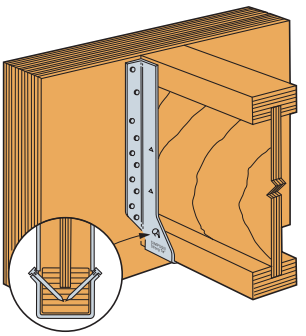

MIU with Correct PAN Installation

C-C-2021 ©2021 SIMPSON STRONG-TIE COMPANY INC.

HUS/HHUS/HGUS

Double-Shear Face-Mount Hangers

This product is preferable to similar connectors because of (a) easier installation, (b) higher loads, (c) lower installed cost, or a combination of these features.

See hanger tables on pp. 145–152.

These hangers are designed for applications where higher loads are needed (also see HUC and HUCQ).

All hangers in this series have double-shear nailing. This innovation distributes the load through two points on each joist nail for greater strength. It also allows the use of fewer nails, faster installation and the use of common nails for all connections. (Do not bend or remove tabs.)

Material: HHUS — 14 gauge; HGUS — 12 gauge;
HUS 2x and 1¾ sizes — 16 gauge; HUS —14 gauge

Finish: Galvanized. Some products available in stainless steel or ZMAX®. See Corrosion Information, pp. 12–15.

Installation:

- Use all specified fasteners; see General Notes.
- Do not use double-shear hangers with I-joists.
- Nails must be driven at an angle through the joist or truss into the header to achieve the table loads.
- Not designed for welded or nailer applications.
- See p. 22 for alternate fastener sizes and load adjustments.

Options:

- HUS cannot be modified
- Other sizes available; contact Simpson Strong-Tie for details

HHUS — Sloped and/or Skewed Seat

- HHUS hangers can be skewed to a maximum of 45° and/or sloped to a maximum of 45°
- For skew only, maximum allowable download is 0.85 of the table load
- For sloped only or sloped and skewed hangers, the maximum allowable download is 0.65 of the table load
- Uplift loads for sloped/skewed conditions are 0.72 of the table load, not to exceed 2,475 lb.
- The joist must be bevel-cut to allow for double shear nailing

HGUS — Skewed Seat

- HGUS hangers can be skewed only to a maximum of 45°. Allowable loads are:

HGUS Seat Width	Joist	Down Load	Uplift
W < 2"	square cut	0.62 of table load	0.46 of table load
W < 2"	bevel cut	0.72 of table load	0.46 of table load
2" < W < 6"	bevel cut	0.85 of table load	0.41 of table load
W > 6"	bevel cut	0.85 of table load	0.41 of table load

Codes: See p. 11 for Code Reference Key Chart

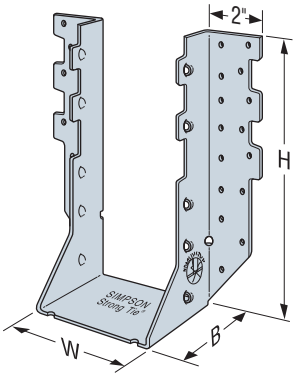

HHUS410

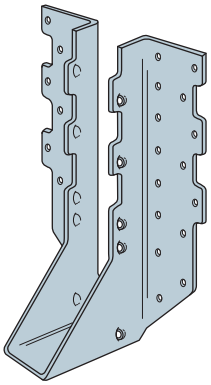

HUS181-10

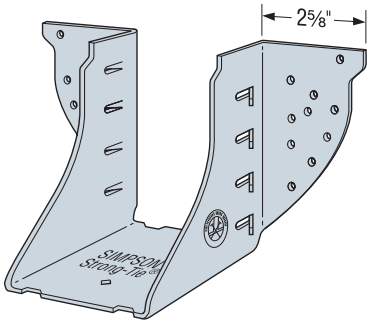

HGUS46

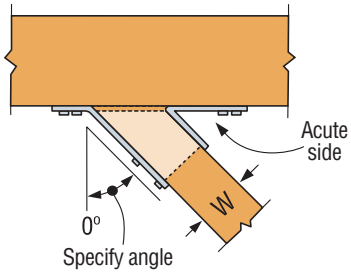

Top View HHUS Hanger Skewed Right
(joist must be bevel cut)

C-C-2021 ©2021 SIMPSON STRONG-TIE COMPANY INC.

U/HU/HUC/HUCQ

Face-Mount Hangers

See hanger tables on pp. 145–152.

U — The standard U hanger provides flexibility of joist to header installation. Versatile fastener selection with tested allowable loads.

HU/HUC — Most models have triangle and round holes. To achieve maximum loads, fill both round and triangle holes with common nails.

HUCQ — Features concealed flanges so it can be installed close to the end of the supporting beam or on a post. They install with Strong-Drive® SDS Heavy-Duty Connector screws (supplied with the hanger) for high capacity and ease of installation.

Feature:

- HUCQ only — Fire-resistant F (flame) and T (temperature) rated in Intertek Design No. SST/WPCF 120-01.

Intertek

Material: U— 16 gauge; HU/HUC/HUCQ — 14 gauge

Finish: Galvanized

Installation:

- Use all specified fasteners; see General Notes.
- HU/HUC — Can be installed filling round holes only, or filling round and triangle holes for maximum values.
- HUCQ — When using structural composite lumber columns, the capacities shown in the tables are for fasteners applied to the wide face of the column.
- Web stiffeners are required for all I-joists used with these hangers.
- For installation to masonry or concrete, see pp. 243–245 .
- HU/HUC/HUCQ hangers can be welded to a steel member. Allowable loads are the lesser of the values in the hanger tables on pp. 145–152 or the weld capacity — refer to technical bulletin T-C-HUHUC-W at **strongtie.com**.

Options:

- Order HUC_X hanger. For both flanges concealed, order HUC.

Sloped, Skewed and Sloped/Skewed:

- For low-cost, code-approved 45° skewed hangers, see SUR/SUL on pp. 154–155.
- For field-adjustable hangers, see LSSR on pp. 156–157.
- See modification table for available options and associated load capacities for U and HU hangers.
- HUCQ cannot be modified.

Codes: See p. 11 for Code Reference Key Chart

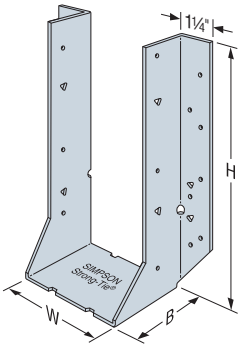

HU410

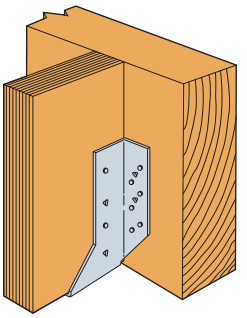

Typical HU7 Installation

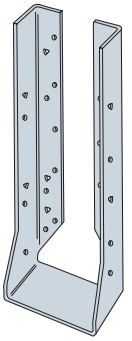

HUC412
Concealed Flanges

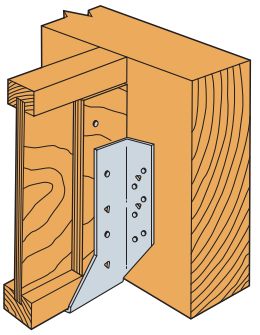

Typical HU7 Installation

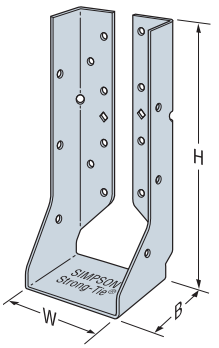

HUCQ

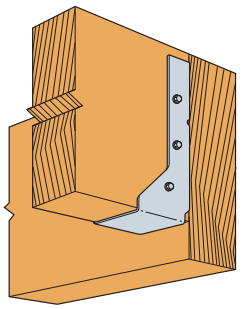

Typical HUCQ Installed on End of a Beam

Model configurations may differ from those shown. Some HU models do not have triangle holes. Contact Simpson Strong-Tie for details.

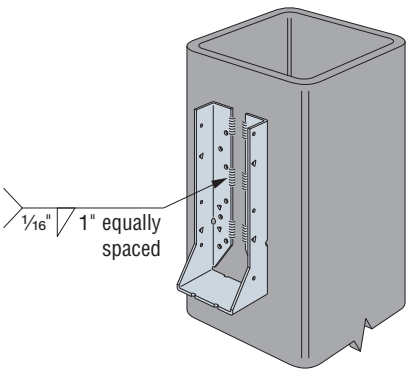

HUC Welded to Steel Column

C-C-2021 ©2021 SIMPSON STRONG-TIE COMPANY INC.

Face-Mount Hangers (cont.)

U/HU/HUC Series Modifications and Associated Load Reductions

Seat			Flange	Fastener Substitutions
Seat Sloped Up or Down 45° Max.	Seat Skewed 67½° Max.[3] for W ≤ 6 45° Max. for W ≥ 6	Seat Sloped and Skewed	One or Both HU Flanges Concealed[2]	Stainless-Steel Nails 0.162" x 3½"
1.00	W ≤ 3⁹⁄₁₆ use 1.00 W > 3⁹⁄₁₆ use 0.80	0.80	1.00 (normal) 0.80 (when sloped and skewed)	Ring shank 1.00 Smooth shank (normal seat) 1.00 Smooth shank (modified seat[1]) 0.50

1. Modified seat is sloped, skewed, or both. If sloped only or skewed only, use a smooth-shank stainless-steel reduction of 0.65.
2. For hanger applications with both flanges concealed, W must be at least 2⁵⁄₁₆". To order, ask for HUCXXX. For skewed HUC, only flange on acute side is concealed.
3. Skews over 50° require a square-cut joist.

Reduction Factor Instructions

Allowable Download = Seat x Flange x Stainless Steel Nails x Other Fastener Substitutions x Table Load

Allowable Uplift = 0.75 x Face Fastener Type x Table Load for skewed or sloped
1.00 x Face Fastener Type x Table Load for non-skewed or non-sloped

Maximum Skew Angle for Skewed HUC Hangers

Hanger Width (in.)	Maximum Skew (degree)
2⁵⁄₁₆	31
2⅜	31
2⁹⁄₁₆	34
2¾	37
3⅛	41
3¼	42
> 3¼	45

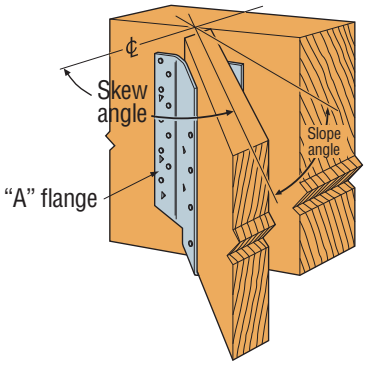

Typical HU Sloped Down, Skewed Right Installation

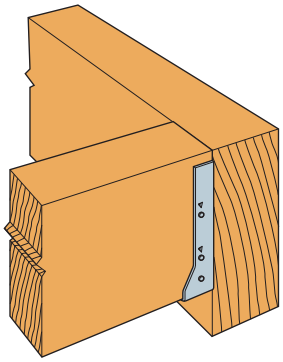

Typical HUC Installed on a Beam

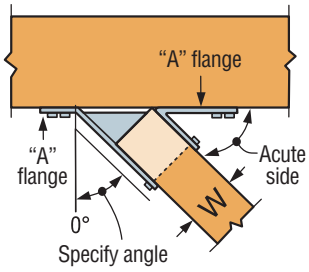

Top View U Hanger Skewed Right < 51°
(square cut)

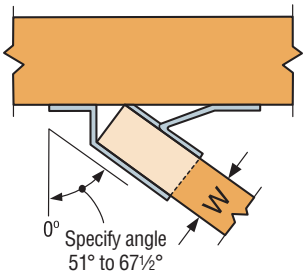

Top View U Hanger Skewed Right ≥ 51°
(square cut)

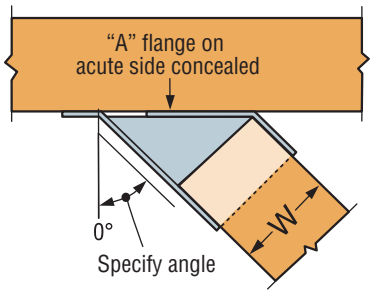

Top View HUC Concealed Hanger Skewed Right
(square cut)

C-C-2021 ©2021 SIMPSON STRONG-TIE COMPANY INC.

LGU/MGU/HGU/HHGU

High-Capacity Girder Hangers

The GU hangers are high-capacity girder hangers designed for situations where the header and joist are flush at top. This part can be used for retrofit on the framing members after they are temporarily placed in position. It uses Strong-Drive® SDS Heavy-Duty Connector screws to make installation fast and easy, with no predrilling required.

Feature:

- Fire-resistant F (flame) and T (temperature) rated in Intertek Design No. SST/WPCF 120-01.

Intertek

Material: See table

Finish: Galvanized, HHGU — Simpson Strong-Tie gray paint

Installation:

- Use all specified fasteners; see General Notes.
- Install with ¼" x 2½" Strong-Drive SDS Heavy-Duty Connector screws (SDS), which are provided with the GUs. (Note: lag screws will not achieve the same loads.)
- Alternatively, the ¼" x 2½" SDS face screws supplied with these hangers may be replaced with ¼" x 3½" SDS or ¼" x 5" SDS screws for two-ply or three-ply LVL headers to transfer the hanger load to all plies. This alternate fastener option does not eliminate the need for uniform fastener requirements along the length of the multi-ply header.
- All multiple members must be fastened together to act as a single unit.
- Multiple-member headers may require additional fasteners at the hanger locations. The quantity and location of the additional fasteners must be determined by the designer.

Options:

- Hot-dip galvanized available. Order as "X" version; specify HDG.
- Other seat widths available. Order as "X" version; specify width.

Concealed Flange

- LGU, MGU, HGU and HHGU are available with one flange concealed. Specify flange to conceal.
- Allowable loads for one flange-concealed option:

LGU	1.00 of published load
MGU	0.88 of published load
HGU	0.75 of published load
HHGU	0.75 of published load

- On LGU with W 3¼" or less, MGU with W 4" or less and HGU with W 4¹¹⁄₁₆" or less, flanges cannot be concealed.

Skewed

- LGU, MGU, HGU, LGUM and HGUM hangers are available skewed up to 45°.
- Apply the following reduction factors to published loads:

Reduction Factors for Skewed LGU, MGU, HGU

Model	Beam Cut	Download	Uplift
LGU	Square cut	0.90	0.60
	Bevel cut	0.90	0.60
MGU/HGU less than 6" wide	Square cut	0.75	0.65
	Bevel cut	0.80	0.65
MGU/HGU 6" and wider	Bevel cut	0.80	0.55

- Concealed flanges are not available with skewed models.

Codes: See p. 11 for Code Reference Key Chart

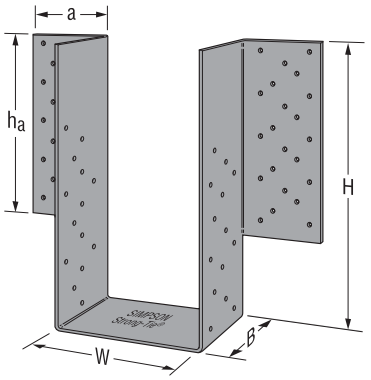

HHGU
(LGU, MGU, HGU similar)

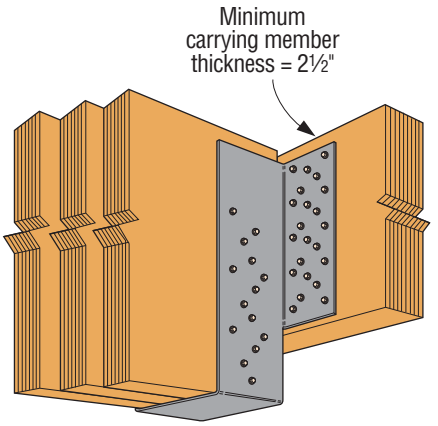

Typical HHGU Installation

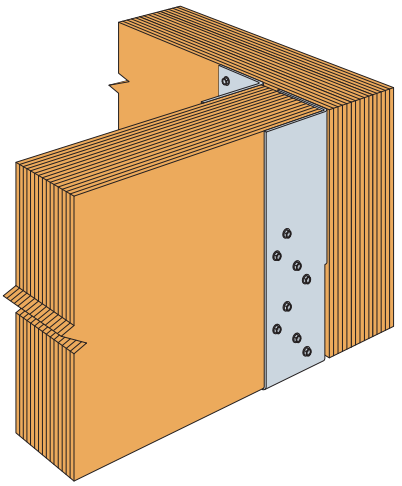

Typical MGU Installation with Right Flange Concealed

C-C-2021 ©2021 SIMPSON STRONG-TIE COMPANY INC.

LGU/MGU/HGU/HHGU

High-Capacity Girder Hangers (cont.)

These products are available with additional corrosion protection. For more information, see p. 14.

Actual Carried Beam Width (in.)	Model No.	Ga.	Dimensions (in.)						SDS Fasteners		Allowable Loads						Code Ref.
											DF/SP			SPF/HF			
											Uplift	Download		Uplift	Download		
			W	Min. H	Max. H	B	h_a	a	Face	Joist	160	100	115/125	160	100	115/125	
3⅛	LGU3.25-SDS	10	3¼	8	30	4½	7⅜	3¼	(16) ¼" x 2½"	(12) ¼" x 2½"	5,555	6,720	7,310	4,775	4,800	5,220	IBC, FL, LA
3½	LGU3.63-SDS	10	3⅝	8	30	4½	7⅜	3¼	(16) ¼" x 2½"	(12) ¼" x 2½"	5,555	6,720	7,310	4,775	4,800	5,220	
	MGU3.63-SDS	10	3⅝	9¼	30	4½	8⅝	4	(24) ¼" x 2½"	(16) ¼" x 2½"	7,260	9,450	9,450	6,245	7,200	7,200	
	HGU3.63-SDS	7	3⅝	11	30	5¼	10⅜	4 11/16	(36) ¼" x 2½"	(24) ¼" x 2½"	9,460	13,160	13,160	8,135	10,800	10,800	
5⅛	LGU5.25-SDS	10	5¼	8	30	4½	7⅜	3¼	(16) ¼" x 2½"	(12) ¼" x 2½"	5,555	6,720	7,310	4,775	4,800	5,220	
	MGU5.25-SDS	10	5¼	9¼	30	4½	8⅝	4	(24) ¼" x 2½"	(16) ¼" x 2½"	7,260	9,450	9,450	6,245	7,200	7,200	
	HGU5.25-SDS	7	5¼	11	30	5¼	10⅜	4 11/16	(36) ¼" x 2½"	(24) ¼" x 2½"	9,460	13,160	13,160	8,135	10,800	10,800	
	HHGU5.25-SDS	3	5¼	13	30	5¼	12⅜	4 11/16	(44) ¼" x 2½"	(28) ¼" x 2½"	10,050	18,480	20,455	8,610	13,200	15,180	
5¼	MGU5.50-SDS	10	5½	9¼	30	4½	8⅝	4	(24) ¼" x 2½"	(16) ¼" x 2½"	7,260	9,450	9,450	6,245	7,200	7,200	
	HGU5.50-SDS	7	5½	11	30	5¼	10⅜	4 11/16	(36) ¼" x 2½"	(24) ¼" x 2½"	9,460	13,160	13,160	8,135	10,800	10,800	
	HHGU5.50-SDS	3	5½	13	30	5¼	12⅜	4 11/16	(44) ¼" x 2½"	(28) ¼" x 2½"	10,050	18,480	20,455	8,610	13,200	15,180	
5½	MGU5.62-SDS	10	5⅝	9¼	30	4½	8⅝	4	(24) ¼" x 2½"	(16) ¼" x 2½"	7,260	9,450	9,450	6,245	7,200	7,200	
	HGU5.62-SDS	7	5⅝	11	30	5¼	10⅜	4¾	(36) ¼" x 2½"	(24) ¼" x 2½"	9,460	13,160	13,160	8,135	10,800	10,800	
	HHGU5.62-SDS	3	5⅝	13	30	5¼	12⅜	4¾	(44) ¼" x 2½"	(28) ¼" x 2½"	10,050	18,480	20,455	8,610	13,200	15,180	
6¾	MGU7.00-SDS	10	7	9¼	30	4½	8⅝	4	(24) ¼" x 2½"	(16) ¼" x 2½"	7,260	9,450	9,450	6,245	7,200	7,200	
	HGU7.00-SDS	7	7	11	30	5¼	10⅜	4 11/16	(36) ¼" x 2½"	(24) ¼" x 2½"	9,460	13,160	13,160	8,135	10,800	10,800	
	HHGU7.00-SDS	3	7	13	30	5¼	12⅜	4 11/16	(44) ¼" x 2½"	(28) ¼" x 2½"	14,550	18,480	20,455	12,165	13,200	15,180	
7	HGU7.25-SDS	7	7¼	11	30	5¼	10⅜	4 11/16	(36) ¼" x 2½"	(24) ¼" x 2½"	9,460	13,160	13,160	8,135	10,800	10,800	
	HHGU7.25-SDS	3	7¼	13	30	5¼	12⅜	4 11/16	(44) ¼" x 2½"	(28) ¼" x 2½"	14,550	18,480	20,455	12,525	13,200	15,180	
8¾	HGU9.00-SDS	7	9	11	30	5¼	10⅜	4 11/16	(36) ¼" x 2½"	(24) ¼" x 2½"	9,460	13,160	13,160	8,135	10,800	10,800	
	HHGU9.00-SDS	3	9	13	30	5¼	12⅜	4 11/16	(44) ¼" x 2½"	(28) ¼" x 2½"	14,550	18,480	20,455	12,525	13,200	15,180	
10¾	HGU11.00-SDS	7	11	11	30	5¼	10⅜	4 11/16	(36) ¼" x 2½"	(24) ¼" x 2½"	9,460	13,160	13,160	8,135	10,800	10,800	—
	HHGU11.00-SDS	3	11	13	30	5¼	12⅜	4¾	(44) ¼" x 2½"	(28) ¼" x 2½"	14,550	18,480	20,455	12,525	13,200	15,180	
13¾	HHGU14.00-SDS	3	14	13	30	5¼	12⅜	4¾	(44) ¼" x 2½"	(28) ¼" x 2½"	14,550	18,480	20,455	12,525	13,200	15,180	

1. Uplift loads have been increased for earthquake or wind loading with no further increase allowed. Reduce where other loads govern.
2. Header height shall be greater than or equal to flange height (h_a).
3. **Fasteners:** SDS screws are Simpson Strong-Tie® Strong-Drive® SDS Heavy-Duty Connector screws. See pp. 21–22 for fastener information.

C-C-2021 ©2021 SIMPSON STRONG-TIE COMPANY INC.

Face-Mount Hangers — I-Joists, Glulam and SCL

SIMPSON Strong-Tie®

Codes: See p. 11 for Code Reference Key Chart.

Actual Joist Size (in.)	Model No.	Carried Member: Glulam	SCL	I-joist	Web Stiff Reqd.	Dimensions (in.): W	H	B	Min./Max.	Fasteners (in.): Face	Joist	Allowable Loads: DF/SP Species Header: Uplift (160)	Floor (100)	Snow (115)	Roof (125)	SPF/HF Species Header: Floor (100)	Snow (115)	Roof (125)	Code Ref.
1½ x 9½	U210			•	✓	1 9/16	7 13/16	2	—	(6) 0.148 x 3	(6) 0.148 x 1½	990	1,220	1,380	1,480	1,050	1,185	1,275	IBC, FL, LA
	MIU1.56/9			•	—	1 9/16	8 15/16	2½	—	(16) 0.162 x 3½	(2) 0.148 x 1½	230	2,305	2,615	2,820	1,980	2,245	2,425	
1½ x 11⅞	U210			•	✓	1 9/16	7 13/16	2	—	(6) 0.148 x 3	(6) 0.148 x 1½	990	1,220	1,380	1,480	1,050	1,185	1,275	
	MIU1.56/11			•	—	1 9/16	11 1/16	2½	—	(20) 0.162 x 3½	(2) 0.148 x 1½	230	2,880	3,135	3,135	2,475	2,695	2,695	
1¾ x 5½	HU1.81/5		•		—	1 13/16	5⅜	2½	Min.	(12) 0.162 x 3½	(4) 0.148 x 1½	610	1,785	2,015	2,165	1,540	1,735	1,865	
									Max.	(16) 0.162 x 3½	(6) 0.148 x 1½	915	2,380	2,685	2,890	2,050	2,315	2,490	
1¾ x 7¼	HU7		•		—	1 13/16	6 11/16	2½	Min.	(12) 0.162 x 3½	(4) 0.148 x 1½	610	1,785	2,015	2,165	1,540	1,735	1,865	
									Max.	(16) 0.162 x 3½	(8) 0.148 x 1½	1515	2,380	2,685	2,890	2,050	2,315	2,490	
1¾ x 9½	IUS1.81/9.5			•	—	1⅞	9½	2	—	(8) 0.148 x 3	—	70	950	1,080	1,165	815	925	1,000	
	HU9		•	•	✓	1 13/16	9 5/16	2½	Min.	(18) 0.162 x 3½	(6) 0.148 x 1½	915	2,680	3,020	3,250	2,305	2,605	2,800	
									Max.	(24) 0.162 x 3½	(10) 0.148 x 1½	1,795	3,570	4,030	4,335	3,075	3,470	3,735	
	HUS1.81/10		•		—	1 13/16	8⅞	3	—	(30) 0.162 x 3½	(10) 0.162 x 3½	2,675	5,510	5,830	5,830	4,360	4,675	4,885	
	HUCQ1.81/9-SDS		•		—	1 13/16	9	3	—	(8) ¼ x 1¾ SDS	(4) ¼ x 1¾ SDS	1,310	2,000	2,300	2,500	1,440	1,655	1,800	
	MIU1.81/9		•	•	—	1 13/16	8 13/16	2½	—	(16) 0.162 x 3½	(2) 0.148 x 1½	230	2,305	2,615	2,820	1,980	2,245	2,425	
1¾ x 11⅞	IUS1.81/11.88			•	—	1⅞	11⅞	2	—	(10) 0.148 x 3	—	70	1,185	1,345	1,455	1,020	1,160	1,250	
	MIU1.81/11		•	•	—	1 13/16	11 1/16	2½	—	(20) 0.162 x 3½	(2) 0.148 x 1½	230	2,880	3,135	3,135	2,475	2,695	2,695	
	HUS1.81/10		•		—	1 13/16	8⅞	3	—	(30) 0.162 x 3½	(10) 0.162 x 3½	2,675	5,510	5,830	5,830	4,360	4,675	4,885	
	HU11		•	•	✓	1 13/16	11 1/16	2½	Min.	(22) 0.162 x 3½	(6) 0.148 x 1½	915	3,275	3,695	3,970	2,820	3,180	3,425	
									Max.	(30) 0.162 x 3½	(10) 0.148 x 1½	1,795	4,465	4,705	4,810	3,845	4,340	4,600	
	HUCQ1.81/11-SDS		•		—	1 13/16	11	3	—	(10) ¼ x 1¾ SDS	(4) ¼ x 1¾ SDS	1,310	2,500	2,875	3,125	1,800	2,070	2,250	
1¾ x 14	IUS1.81/14		•	•	—	1⅞	14	2	Min.	(12) 0.148 x 3	—	70	1,420	1,615	1,745	1,220	1,390	1,500	
									Max.	(14) 0.148 x 3	—	70	1,660	1,805	1,805	1,425	1,550	1,550	
	MIU1.81/14		•	•	—	1 13/16	13 5/16	2½	—	(22) 0.162 x 3½	(2) 0.148 x 1½	230	3,170	3,595	3,875	2,725	3,090	3,335	
	HUS1.81/10		•		—	1 13/16	8⅞	3	—	(30) 0.162 x 3½	(10) 0.162 x 3½	2,675	5,510	5,830	5,830	4,360	4,675	4,885	
	U14		•	•	✓	1 13/16	10¼	2	—	(14) 0.162 x 3½	(6) 0.148 x 1½	970	2,015	2,285	2,465	1,735	1,965	2,120	
	HU14		•	•	✓	1 13/16	13 11/16	2½	Min.	(28) 0.162 x 3½	(8) 0.148 x 1½	1,515	4,165	4,420	4,505	3,590	4,050	4,335	
									Max.	(36) 0.162 x 3½	(14) 0.148 x 1½	1,795	5,055	5,275	5,420	4,615	5,000	5,130	
	HUCQ1.81/11-SDS		•		—	1 13/16	11	3	—	(10) ¼ x 1¾ SDS	(4) ¼ x 1¾ SDS	1,310	2,500	2,875	3,125	1,800	2,070	2,250	
1¾ x 16	IUS1.81/16			•	—	1⅞	16	2	Min.	(14) 0.148 x 3	—	70	1,660	1,805	1,805	1,425	1,555	1,555	
									Max.	(16) 0.148 x 3	—	70	1,805	1,805	1,805	1,555	1,555	1,555	
	MIU1.81/16			•	—	1 13/16	15 5/16	2½	—	(24) 0.162 x 3½	(2) 0.148 x 1½	230	3,455	3,920	4,045	2,970	3,370	3,480	
1¾ x 18	MIU1.81/18			•	—	1 13/16	17 5/16	2½	—	(26) 0.162 x 3½	(2) 0.148 x 1½	230	3,745	4,020	4,045	3,220	3,460	3,480	
2 x 9½	IUS2.06/9.5			•	—	2⅛	9½	2	—	(8) 0.148 x 3	—	70	950	1,080	1,165	815	925	1,000	
	HU2.1/9			•	✓	2⅛	9 3/16	2½	—	(14) 0.162 x 3½	(6) 0.148 x 1½	915	2,085	2,350	2,530	1,795	2,025	2,180	
2 x 11⅞	IUS2.06/11.88			•	—	2⅛	11⅞	2	—	(10) 0.148 x 3	—	70	1,185	1,345	1,455	1,020	1,160	1,250	
	MIU2.1/11			•	✓	2⅛	11 1/16	2½	—	(20) 0.162 x 3½	(2) 0.148 x 1½	230	2,880	3,135	3,135	2,475	2,695	2,695	
	HU2.1/11			•	✓	2⅛	11	2½	—	(16) 0.162 x 3½	(6) 0.148 x 1½	915	2,380	2,685	2,890	2,050	2,315	2,490	
2 x 14	IUS2.06/14			•	—	2⅛	14	2	Min.	(12) 0.148 x 3	—	70	1,420	1,615	1,745	1,220	1,390	1,500	
									Max.	(14) 0.148 x 3	—	70	1,660	1,805	1,805	1,425	1,555	1,555	
	MIU2.1/11			•	✓	2⅛	11 1/16	2½	—	(20) 0.162 x 3½	(2) 0.148 x 1½	230	2,880	3,135	3,135	2,475	2,695	2,695	
	HU2.1/11			•	✓	2⅛	11	2½	—	(16) 0.162 x 3½	(6) 0.148 x 1½	915	2,380	2,685	2,890	2,050	2,315	2,490	
2 x 16	IUS2.06/16			•	—	2⅛	16	2	Min.	(14) 0.148 x 3	—	70	1,660	1,805	1,805	1,425	1,555	1,555	
									Max.	(16) 0.148 x 3	—	70	1,805	1,805	1,805	1,555	1,555	1,555	
	HU2.1/11			•	✓	2⅛	11	2½	—	(16) 0.162 x 3½	(6) 0.148 x 1½	915	2,380	2,685	2,890	2,050	2,315	2,490	
2 1/16 x 9½	IUS2.06/9.5			•	—	2⅛	9½	2	—	(8) 0.148 x 3	—	70	950	1,080	1,165	815	925	1,000	
	HU2.1/9			•	✓	2⅛	9 3/16	2½	—	(14) 0.162 x 3½	(6) 0.148 x 1½	915	2,085	2,350	2,530	1,795	2,025	2,180	
2 1/16 x 11⅞	IUS2.06/11.88			•	—	2⅛	11⅞	2	—	(10) 0.148 x 3	—	70	1,185	1,345	1,455	1,020	1,160	1,250	
	MIU2.1/11			•	✓	2⅛	11 1/16	2½	—	(20) 0.162 x 3½	(2) 0.148 x 1½	230	2,880	3,135	3,135	2,475	2,695	2,695	
	HU2.1/11			•	✓	2⅛	11	2½	—	(16) 0.162 x 3½	(6) 0.148 x 1½	915	2,380	2,685	2,890	2,050	2,315	2,490	

See footnotes on p. 152.

C-C-2021 ©2021 SIMPSON STRONG-TIE COMPANY INC.

Face-Mount Hangers — I-Joists, Glulam and SCL

SIMPSON Strong-Tie®

Codes: See p. 11 for Code Reference Key Chart.

Actual Joist Size (in.)	Model No.	Carried Member: Glulam	SCL	I-joist	Web Stiff Reqd.	Dimensions (in.): W	H	B	Min./Max.	Fasteners (in.): Face	Joist	Allowable Loads: DF/SP Species Header: Uplift (160)	Floor (100)	Snow (115)	Roof (125)	SPF/HF Species Header: Floor (100)	Snow (115)	Roof (125)	Code Ref.
2 1/16 x 14	IUS2.06/14			•	—	2 1/8	14	2	—	(12) 0.148 x 3	—	70	1,420	1,615	1,745	1,220	1,390	1,500	IBC, FL, LA
	MIU2.1/11			•	✓	2 1/8	11 1/16	2 1/2	—	(20) 0.162 x 3 1/2	(2) 0.148 x 1 1/2	230	2,880	3,135	3,135	2,475	2,695	2,695	
	HU2.1/11			•	✓	2 1/8	11	2 1/2	—	(16) 0.162 x 3 1/2	(6) 0.148 x 1 1/2	915	2,380	2,685	2,890	2,050	2,315	2,490	
2 1/16 x 16	IUS2.06/16			•	—	2 1/8	16	2	—	(14) 0.148 x 3	—	70	1,660	1,805	1,805	1,425	1,555	1,555	
	MIU2.1/11			•	✓	2 1/8	11 1/16	2 1/2	—	(20) 0.162 x 3 1/2	(2) 0.148 x 1 1/2	230	2,880	3,135	3,135	2,475	2,695	2,695	
	HU2.1/11			•	✓	2 1/8	11	2 1/2	—	(16) 0.162 x 3 1/2	(6) 0.148 x 1 1/2	915	2,380	2,685	2,890	2,050	2,315	2,490	
2 1/4 x 9 1/2 to 20	2 1/4"-wide joists use the same hangers as 2 5/16"-wide joists with the following load adjustments to the table loads: IUS download is the lesser of the table load or 1,400 lb.; IUS uplift is 55 lb.; MIU and U downloads are the lesser of the table load or 2,140 lb.																		
2 5/16 x 9 1/2	IUS2.37/9.5			•	—	2 7/16	9 1/2	2	—	(8) 0.148 x 3	—	70	950	1,080	1,165	815	925	1,000	IBC, FL, LA
	MIU2.37/9			•	—	2 3/8	9	2 1/2	—	(16) 0.162 x 3 1/2	(2) 0.148 x 1 1/2	230	2,305	2,615	2,820	1,980	2,245	2,425	
	U3510/14			•	✓	2 5/16	9	2	—	(14) 0.162 x 3 1/2	(6) 0.148 x 1 1/2	970	2,015	2,285	2,465	1,735	1,965	2,120	
	HU359 / HUC359			•	✓	2 3/8	9	2 1/2	Min.	(14) 0.162 x 3 1/2	(6) 0.148 x 1 1/2	915	2,085	2,350	2,530	1,795	2,025	2,180	
									Max.	(18) 0.162 x 3 1/2	(10) 0.148 x 1 1/2	1,795	2,680	3,020	3,250	2,305	2,605	2,800	
2 5/16 x 11 7/8	IUS2.37/11.88			•	—	2 7/16	11 7/8	2	—	(10) 0.148 x 3	—	70	1,185	1,345	1,455	1,020	1,160	1,250	
	MIU2.37/11			•	—	2 3/8	11 1/16	2 1/2	—	(20) 0.162 x 3 1/2	(2) 0.148 x 1 1/2	230	2,880	3,135	3,135	2,475	2,695	2,695	
	U3516/20			•	✓	2 5/16	10 9/16	2	—	(16) 0.162 x 3 1/2	(6) 0.148 x 1 1/2	970	2,305	2,615	2,820	1,980	2,245	2,425	
	HU3511 / HUC3511			•	✓	2 3/8	10 15/16	2 1/2	Min.	(16) 0.162 x 3 1/2	(6) 0.148 x 1 1/2	915	2,380	2,685	2,890	2,050	2,315	2,490	
									Max.	(22) 0.162 x 3 1/2	(10) 0.148 x 1 1/2	1,795	3,275	3,695	3,970	2,820	3,180	3,425	
2 5/16 x 14	IUS2.37/14			•	—	2 7/16	14	2	Min.	(12) 0.148 x 3	—	70	1,420	1,615	1,745	1,220	1,390	1,500	
									Max.	(14) 0.148 x 3	—	70	1,660	1,805	1,805	1,425	1,555	1,555	
	MIU2.37/14			•	—	2 3/8	13 1/2	2 1/2	—	(22) 0.162 x 3 1/2	(2) 0.148 x 1 1/2	230	3,170	3,595	3,875	2,725	3,090	3,335	
	U3516/20			•	✓	2 5/16	10 9/16	2	—	(16) 0.162 x 3 1/2	(6) 0.148 x 1 1/2	970	2,305	2,615	2,820	1,980	2,245	2,425	
	HU3514 / HUC3514			•	✓	2 3/8	12 1/2	2 1/2	Min.	(18) 0.162 x 3 1/2	(8) 0.148 x 1 1/2	1,515	2,680	3,020	3,250	2,305	2,605	2,800	
									Max.	(24) 0.162 x 3 1/2	(12) 0.148 x 1 1/2	1,795	3,570	4,030	4,335	3,075	3,470	3,735	
2 5/16 x 16	IUS2.37/16			•	—	2 7/16	16	2	Min.	(14) 0.148 x 3	—	70	1,660	1,805	1,805	1,425	1,555	1,555	
									Max.	(16) 0.148 x 3	—	70	1,805	1,805	1,805	1,555	1,555	1,555	
	MIU2.37/16			•	—	2 3/8	15 1/2	2 1/2	—	(24) 0.162 x 3 1/2	(2) 0.148 x 1 1/2	230	3,455	3,920	4,045	2,970	3,370	3,480	
	U3516/20			•	✓	2 5/16	10 9/16	2	—	(16) 0.162 x 3 1/2	(6) 0.148 x 1 1/2	970	2,305	2,615	2,820	1,980	2,245	2,425	
	HU3516/22 / HUC3516/22			•	✓	2 3/8	14 1/4	2 1/2	—	(20) 0.162 x 3 1/2	(8) 0.148 x 1 1/2	1,515	2,975	3,360	3,610	2,565	2,895	3,110	
2 5/16 x 18	MIU2.37/18			•	—	2 3/8	17 1/2	2 1/2	—	(26) 0.162 x 3 1/2	(2) 0.148 x 1 1/2	230	3,745	4,045	4,045	3,220	3,480	3,480	
	HU3524/30			•	✓	2 3/8	18	2 1/2	Min.	(18) 0.162 x 3 1/2	(8) 0.148 x 1 1/2	1,515	2,680	3,020	3,250	2,305	2,605	2,800	
									Max.	(24) 0.162 x 3 1/2	(14) 0.148 x 1 1/2	1,795	3,570	4,030	4,335	3,075	3,470	3,735	
2 5/16 x 20	MIU2.37/20			•	—	2 3/8	19 1/2	2 1/2	—	(28) 0.162 x 3 1/2	(2) 0.148 x 1 1/2	230	4,030	4,060	4,060	3,465	3,495	3,495	
2 5/16 x 22 to 30	MIU2.37/20			•	✓	2 3/8	19 1/2	2 1/2	—	(28) 0.162 x 3 1/2	(2) 0.148 x 1 1/2	230	4,030	4,060	4,060	3,465	3,495	3,495	
	HU3524/30			•	✓	2 3/8	18	2 1/2	Min.	(18) 0.162 x 3 1/2	(8) 0.148 x 1 1/2	1,515	2,680	3,020	3,250	2,305	2,605	2,800	
									Max.	(24) 0.162 x 3 1/2	(14) 0.148 x 1 1/2	1,795	3,570	4,030	4,335	3,075	3,470	3,735	
2 7/16 x 9 1/2 to 16	2 7/16"-wide joists use the same hangers as 2 1/2"-wide joists with the following load adjustments to the table loads: IUS download is same as table but not to exceed 1,400 lb; IUS uplift is 55 lb.; MIU download is same as table but not to exceed 2,140 lb.																		
2 1/2 x 9 1/2	IUS2.56/9.5			•	—	2 5/8	9 1/2	2	—	(8) 0.148 x 3	—	70	950	1,080	1,165	815	925	1,000	IBC, FL, LA
	MIU2.56/9			•	—	2 9/16	8 15/16	2 1/2	—	(16) 0.162 x 3 1/2	(2) 0.148 x 1 1/2	230	2,305	2,615	2,820	1,980	2,245	2,425	
	U310			•	✓	2 9/16	8 7/8	2	—	(14) 0.162 x 3 1/2	(6) 0.148 x 1 1/2	970	1,705	1,930	2,075	1,465	1,660	1,785	
	HU310 / HUC310			•	✓	2 9/16	8 7/8	2 1/2	—	(14) 0.162 x 3 1/2	(6) 0.148 x 1 1/2	915	2,085	2,350	2,520	1,795	2,025	2,170	
2 1/2 x 11 7/8	IUS2.56/11.88			•	—	2 5/8	11 7/8	2	—	(10) 0.148 x 3	—	70	1,185	1,345	1,455	1,020	1,160	1,250	
	MIU2.56/11			•	—	2 9/16	11 1/16	2 1/2	—	(20) 0.162 x 3 1/2	(2) 0.148 x 1 1/2	230	2,880	3,135	3,135	2,475	2,695	2,695	
	U314			•	✓	2 9/16	10 1/2	2	—	(16) 0.162 x 3 1/2	(6) 0.148 x 1 1/2	970	1,945	2,205	2,375	1,675	1,895	2,045	
	HU312 / HUC312			•	✓	2 9/16	10 5/8	2 1/2	—	(16) 0.162 x 3 1/2	(6) 0.148 x 1 1/2	915	2,380	2,685	2,890	2,050	2,315	2,490	
2 1/2 x 14	IUS2.56/14			•	—	2 5/8	14	2	Min.	(12) 0.148 x 3	—	70	1,420	1,615	1,745	1,220	1,390	1,500	
									Max.	(14) 0.148 x 3	—	70	1,660	1,805	1,805	1,425	1,555	1,555	
	MIU2.56/14			•	—	2 9/16	13 7/16	2 1/2	—	(22) 0.162 x 3 1/2	(2) 0.148 x 1 1/2	230	3,170	3,595	3,875	2,725	3,090	3,335	
	U314			•	✓	2 9/16	10 1/2	2	—	(16) 0.162 x 3 1/2	(6) 0.148 x 1 1/2	970	1,945	2,205	2,375	1,675	1,895	2,045	
	HU314 / HUC314			•	✓	2 9/16	12 3/8	2 1/2	—	(18) 0.162 x 3 1/2	(8) 0.148 x 1 1/2	1,515	2,680	3,020	3,250	2,305	2,605	2,800	

See footnotes on p. 152.

C-C-2021 ©2021 SIMPSON STRONG-TIE COMPANY INC.

Face-Mount Hangers — I-Joists, Glulam and SCL

SIMPSON Strong-Tie®

These products are available with additional corrosion protection. For more information, see p. 14.

Codes: See p. 11 for Code Reference Key Chart.

Actual Joist Size (in.)	Model No.	Carried Member: Glulam	SCL	I-joist	Web Stiff Reqd.	Dimensions (in.): W	H	B	Min./Max.	Fasteners (in.): Face	Joist	Allowable Loads: DF/SP Species Header: Uplift (160)	Floor (100)	Snow (115)	Roof (125)	SPF/HF Species Header: Floor (100)	Snow (115)	Roof (125)	Code Ref.
2½ x 16	IUS2.56/16			•	—	2⅝	16	2	Min.	(14) 0.148 x 3	—	70	1,660	1,805	1,805	1,425	1,555	1,555	IBC, FL, LA
									Max.	(16) 0.148 x 3	—	70	1,805	1,805	1,805	1,555	1,555	1,555	
	MIU2.56/16			•	—	2 9/16	15 7/16	2½	—	(24) 0.162 x 3½	(2) 0.148 x 1½	230	3,455	3,920	4,045	2,970	3,370	3,480	
	U314			•	✓	2 9/16	10½	2	—	(16) 0.162 x 3½	(6) 0.148 x 1½	970	1,945	2,205	2,375	1,675	1,895	2,045	
	HU316 / HUC316			•	✓	2 9/16	14 3/16	2½	—	(20) 0.162 x 3½	(8) 0.148 x 1½	1,515	2,975	3,360	3,610	2,565	2,895	3,110	
2½ x 18	MIU2.56/18			•	—	2 9/16	17 7/16	2½	—	(26) 0.162 x 3½	(2) 0.148 x 1½	230	3,745	4,045	4,045	3,220	3,480	3,480	
	HU316 / HUC316			•	✓	2 9/16	14⅛	2½	—	(20) 0.162 x 3½	(8) 0.148 x 1½	1515	2,975	3,360	3,610	2,565	2,895	3,110	
2½ x 20	MIU2.56/20			•	—	2 9/16	19 7/16	2½	—	(28) 0.162 x 3½	(2) 0.148 x 1½	230	4,030	4,060	4,060	3,465	3,495	3,495	
2½ x 22 to 26	MIU2.56/20			•	✓	2 9/16	19 7/16	2½	—	(28) 0.162 x 3½	(2) 0.148 x 1½	230	4,030	4,060	4,060	3,465	3,495	3,495	
2 9/16 x 9¼ to 26	2 9/16" wide joists use the same hangers as 2½" wide joists and have the same loads.																		
3 x 9½	MIU3.12/9			•	—	3⅛	9 1/16	2½	—	(16) 0.162 x 3½	(2) 0.148 x 1½	230	2,305	2,615	2,820	1,980	2,245	2,425	IBC, FL, LA
	HU210-2 / HUC210-2			•	✓	3⅛	8 9/16	2½	Max.	(18) 0.162 x 3½	(10) 0.148 x 3	1,795	2,680	3,020	3,250	2,305	2,605	2,800	
3 x 11⅞	MIU3.12/11			•	—	3⅛	11⅛	2½	—	(20) 0.162 x 3½	(2) 0.148 x 1½	230	2,880	3,135	3,135	2,475	2,695	2,695	
	HU212-2 / HUC212-2			•	✓	3⅛	10 9/16	2½	Max.	(22) 0.162 x 3½	(10) 0.148 x 3	1,795	3,275	3,695	3,970	2,820	3,180	3,425	
3⅛ glulam	HU3.25/12 / HUC3.25/12	•				3¼	11¾	2½	—	(24) 0.162 x 3½	(12) 0.148 x 3	1,795	3,570	4,030	4,335	3,075	3,470	3,735	
	HU3.25/16 / HUC3.25/16	•				3¼	13 13/16	2½	Min.	(20) 0.162 x 3½	(8) 0.148 x 3	1,515	2,975	3,360	3,610	2,560	2,890	3,105	
		•							Max.	(26) 0.162 x 3½	(12) 0.148 x 3	1,795	3,870	4,365	4,695	3,330	3,755	4,040	
	HUCQ210-2-SDS	•				3¼	9	3	—	(12) ¼ x 2½ SDS	(6) ¼ x 2½ SDS	2,345	4,315	4,315	4,315	3,600	3,710	3,710	
	HGUS3.25/10	•				3¼	8⅝	4	—	(46) 0.162 x 3½	(16) 0.162 x 3½	4,095	9,100	9,100	9,100	7,825	7,825	7,825	
	HGUS3.25/12	•				3¼	10⅝	4	—	(56) 0.162 x 3½	(20) 0.162 x 3½	5,205	11,915	13,330	14,290	10,015	11,550	12,045	
	LGU3.25-SDS	•			—	3¼	8 to 30	4½	—	(16) ¼ x 2½ SDS	(12) ¼ x 2½ SDS	5,555	6,720	7,310	7,310	4,840	5,265	5,265	
3½ x 5¼	HHUS46	•	•		—	3⅝	5⅛	3	—	(14) 0.162 x 3½	(6) 0.162 x 3½	1,320	2,785	3,155	3,405	2,395	2,715	2,930	
	HGUS46	•	•		—	3⅝	4 7/16	4	—	(20) 0.162 x 3½	(8) 0.162 x 3½	2,155	4,355	4,875	5,230	3,755	4,875	5,230	
3½ x 7¼	HUS48	•	•		—	3 9/16	6 15/16	2	—	(6) 0.162 x 3½	(6) 0.162 x 3½	1,320	1,595	1,815	1,960	1,365	1,555	1,680	
	HHUS48	•	•		—	3⅝	7⅛	3	—	(22) 0.162 x 3½	(8) 0.162 x 3½	1,780	4,210	4,770	5,140	3,615	4,095	4,415	
	HGUS48	•	•		—	3⅝	7 1/16	4	—	(36) 0.162 x 3½	(12) 0.162 x 3½	3,235	7,460	7,460	7,460	6,415	6,415	6,415	
3½ x 9½	IUS3.56/9.5			•	—	3⅝	9½	2	—	(10) 0.148 x 3	—	70	1,185	1,345	1,455	1,020	1,160	1,250	
	MIU3.56/9	•	•	•	—	3 9/16	8 13/16	2½	—	(16) 0.162 x 3½	(2) 0.148 x 1½	210	2,305	2,615	2,820	1,980	2,245	2,425	
	U410	•	•	•	✓	3 9/16	8⅜	2	—	(14) 0.162 x 3½	(6) 0.148 x 3	970	2,015	2,285	2,465	1,735	1,965	2,120	
	HUS410	•	•		—	3 9/16	8 15/16	2	—	(8) 0.162 x 3½	(8) 0.162 x 3½	2,990	2,125	2,420	2,615	1,820	2,070	2,240	
	HHUS410	•	•		—	3⅝	9	3	—	(30) 0.162 x 3½	(10) 0.162 x 3½	3,565	5,635	6,380	6,445	4,845	5,486	5,545	
	HU410/HUC410	•	•	•	✓	3 9/16	8⅜	2½	Min.	(14) 0.162 x 3½	(6) 0.148 x 3	1,135	2,085	2,350	2,530	1,795	2,020	2,165	
									Max.	(18) 0.162 x 3½	(10) 0.148 x 3	1,795	2,680	3,020	3,250	2,305	2,605	2,800	
	HUCQ410-SDS	•	•		—	3 9/16	9	3	—	(12) ¼ x 2½ SDS	(6) ¼ x 2½ SDS	2,265	4,500	4,500	4,500	3,240	3,240	3,240	
	HGUS410	•	•		—	3⅝	9 1/16	4	—	(46) 0.162 x 3½	(16) 0.162 x 3½	4,095	9,100	9,100	9,100	7,825	7,825	7,825	
	LGU3.63-SDS	•	•		—	3⅝	8 to 30	4½	—	(16) ¼ x 2½ SDS	(12) ¼ x 2½ SDS	5,555	6,720	6,720	6,720	4,840	4,840	4,840	
	MGU3.63-SDS	•	•		—	3⅝	9¼ to 30	4½	—	(24) ¼ x 2½ SDS	(16) ¼ x 2½ SDS	7,260	9,450	9,450	9,450	6,805	6,805	6,805	
3½ x 11⅞	IUS3.56/11.88			•	—	3⅝	11⅞	2	—	(12) 0.148 x 3	—	70	1,420	1,615	1,745	1,220	1,390	1,485	
	MIU3.56/11			•	—	3 9/16	11⅛	2½	—	(20) 0.162 x 3½	(2) 0.148 x 1½	210	2,880	3,135	3,135	2,475	2,695	2,695	
	U414	•	•	•	✓	3 9/16	10	2	—	(16) 0.162 x 3½	(6) 0.148 x 3	970	2,305	2,615	2,820	1,980	2,245	2,425	
	HHUS410	•	•		—	3⅝	9	3	—	(30) 0.162 x 3½	(10) 0.162 x 3½	3,565	5,635	6,380	6,445	4,845	5,486	5,545	
	HUS412	•	•		—	3 9/16	10½	2	—	(10) 0.162 x 3½	(10) 0.162 x 3½	3,435	2,660	3,025	3,265	2,275	2,590	2,795	
	HU412 / HUC412	•	•		—	3 9/16	10 5/16	2½	Min.	(16) 0.162 x 3½	(6) 0.148 x 3	1,135	2,380	2,685	2,890	2,050	2,315	2,490	
									Max.	(22) 0.162 x 3½	(10) 0.148 x 3	1,795	3,275	3,695	3,970	2,820	3,180	3,425	
	HUCQ412-SDS	•	•		—	3 9/16	11		—	(14) ¼ x 2½ SDS	(6) ¼ x 2½ SDS	2,265	5,045	5,045	5,045	3,630	3,630	3,630	
	HGUS412	•	•		—	3⅝	10 7/16	4	—	(56) 0.162 x 3½	(20) 0.162 x 3½	5,205	11,915	13,330	14,290	10,280	12,160	12,420	
	LGU3.63-SDS	•	•		—	3⅝	8 to 30	4½	—	(16) ¼ x 2½ SDS	(12) ¼ x 2½ SDS	5,555	6,720	6,720	6,720	4,840	4,840	4,840	
	MGU3.63-SDS	•	•		—	3⅝	9¼ to 30	4½	—	(24) ¼ x 2½ SDS	(16) ¼ x 2½ SDS	7,260	9,450	9,450	9,450	6,805	6,805	6,805	
	HGU3.63-SDS	•	•		—	3⅝	11 to 30	4½	—	(36) ¼ x 2½ SDS	(24) ¼ x 2½ SDS	9,460	13,160	13,160	13,160	9,475	9,475	9,475	

See footnotes on p. 152.

C-C-2021 ©2021 SIMPSON STRONG-TIE COMPANY INC.

Face-Mount Hangers — I-Joists, Glulam and SCL

SIMPSON Strong-Tie

These products are available with additional corrosion protection. For more information, see p. 14.

SS For stainless-steel fasteners, see p. 21.

Codes: See p. 11 for Code Reference Key Chart.

Actual Joist Size (in.)	Model No.	Carried Member: Glulam	SCL	I-joist	Web Stiff Reqd.	Dimensions (in.): W	H	B	Min./ Max.	Fasteners (in.): Face	Joist	Allowable Loads: DF/SP Species Header: Uplift (160)	Floor (100)	Snow (115)	Roof (125)	SPF/HF Species Header: Floor (100)	Snow (115)	Roof (125)	Code Ref.
3½ x 14	IUS3.56/14			•	—	3⅝	14	2	Min.	(12) 0.148 x 3	—	70	1,420	1,615	1,745	1,220	1,390	1,500	IBC, FL, LA
									Max.	(14) 0.148 x 3	—	70	1,660	1,805	1,805	1,425	1,555	1,555	
	MIU3.56/14			•		3 9/16	13 5/16	2½	—	(22) 0.162 x 3½	(2) 0.148 x 1½	210	3,170	3,595	3,875	2,725	3,090	3,335	
	U414	•	•	•	✓	3 9/16	10	2	—	(16) 0.162 x 3½	(6) 0.148 x 3	970	2,305	2,615	2,820	1,980	2,245	2,425	
	HHUS410	•	•		—	3⅝	9	3	—	(30) 0.162 x 3½	(10) 0.162 x 3½	3,565	5,635	6,380	6,445	4,845	5,486	5,545	
	HUS412	•	•		—	3 9/16	10½	2	—	(10) 0.162 x 3½	(10) 0.162 x 3½	3,635	2,660	3,025	3,265	2,275	2,590	2,795	
	HU414	•	•	•	✓	3 9/16	12⅝	2½	Max.	(24) 0.162 x 3½	(12) 0.148 x 3	1,795	3,570	4,030	4,335	3,075	3,470	3,735	
	HU416 / HUC416	•	•	•	✓	3 9/16	13⅝	2½	Min.	(20) 0.162 x 3½	(8) 0.148 x 3	1,515	2,975	3,360	3,610	2,565	2,895	3,110	
									Max.	(26) 0.162 x 3½	(12) 0.148 x 3	1,795	3,870	4,365	4,695	3,330	3,760	4,045	
	HUCQ412-SDS	•	•		—	3 9/16	11	3	—	(14) ¼ x 2½ SDS	(6) ¼ x 2½ SDS	2,265	5,045	5,045	5,045	3,630	3,630	3,630	
	HGUS414	•	•		—	3⅝	12 7/16	4	—	(66) 0.162 x 3½	(22) 0.162 x 3½	5,360	13,860	14,350	14,350	11,115	12,420	12,420	
	LGU3.63-SDS	•	•		—	3⅝	8 to 30	4½	—	(16) ¼ x 2½ SDS	(12) ¼ x 2½ SDS	5,555	6,720	6,720	6,720	4,840	4,840	4,840	
	MGU3.63-SDS	•	•		—	3⅝	9¼ to 30	4½	—	(24) ¼ x 2½ SDS	(16) ¼ x 2½ SDS	7,260	9,450	9,450	9,450	6,805	6,805	6,805	
	HGU3.63-SDS	•	•		—	3⅝	11 to 30	4½	—	(36) ¼ x 2½ SDS	(24) ¼ x 2½ SDS	9,460	13,160	13,160	13,160	9,475	9,475	9,475	
3½ x 16	IUS3.56/16			•	—	3⅝	16	2	Min.	(14) 0.148 x 3	—	70	1,660	1,805	1,805	1,425	1,555	1,555	
									Max.	(16) 0.148 x 3	—	70	1,805	1,805	1,805	1,555	1,555	1,555	
	MIU3.56/16	•	•	•	—	3 9/16	15 5/16	2½	—	(24) 0.162 x 3½	(2) 0.148 x 1½	210	3,455	3,920	4,045	2,970	3,370	3,480	
	HU416 / HUC416	•	•	•	—	3 9/16	13⅝	2½	Min.	(20) 0.162 x 3½	(8) 0.148 x 3	1,515	2,975	3,360	3,610	2,565	2,895	3,110	
									Max.	(26) 0.162 x 3½	(12) 0.148 x 3	1,795	3,870	4,365	4,695	3,330	3,760	4,045	
	HGUS414	•	•		—	3⅝	12 7/16	4	—	(66) 0.162 x 3½	(22) 0.162 x 3½	5,360	13,860	14,350	14,350	11,115	12,420	12,420	
	HUCQ412-SDS	•	•		—	3 9/16	11	3	—	(14) ¼ x 2½ SDS	(6) ¼ x 2½ SDS	2,265	5,045	5,045	5,045	3,630	3,630	3,630	
	LGU3.63-SDS	•	•		—	3⅝	8 to 30	4½	—	(16) ¼ x 2½ SDS	(12) ¼ x 2½ SDS	5,555	6,720	6,720	6,720	4,840	4,840	4,840	
	MGU3.63-SDS	•	•		—	3⅝	9¼ to 30	4½	—	(24) ¼ x 2½ SDS	(16) ¼ x 2½ SDS	7,260	9,450	9,450	9,450	6,805	6,805	6,805	
	HGU3.63-SDS	•	•		—	3⅝	11 to 30	4½	—	(36) ¼ x 2½ SDS	(24) ¼ x 2½ SDS	9,895	14,145	14,145	14,145	10,185	10,185	10,185	
3½ x 18	MIU3.56/18			•	—	3 9/16	17 5/16	2½	—	(26) 0.162 x 3½	(2) 0.148 x 1½	210	3,745	4,045	4,045	3,220	3,480	3,480	
	HU416 / HUC416	•	•	•	✓	3 9/16	13⅝	2½	Min.	(20) 0.162 x 3½	(8) 0.148 x 3	1,515	2,975	3,360	3,610	2,565	2,895	3,110	
	HGUS414	•	•		—	3⅝	12 7/16	4	—	(66) 0.162 x 3½	(22) 0.162 x 3½	5,360	13,860	14,350	14,350	11,115	12,420	12,420	
	HUCQ412-SDS	•	•		—	3 9/16	11	3	—	(14) ¼ x 2½ SDS	(6) ¼ x 2½ SDS	2,265	5,045	5,045	5,045	3,630	3,630	3,630	
	LGU3.63-SDS	•	•		—	3⅝	8 to 30	4½	—	(16) ¼ x 2½ SDS	(12) ¼ x 2½ SDS	5,555	6,720	6,720	6,720	4,840	4,840	4,840	
	MGU3.63-SDS	•	•		—	3⅝	9¼ to 30	4½	—	(24) ¼ x 2½ SDS	(16) ¼ x 2½ SDS	7,260	9,450	9,450	9,450	6,805	6,805	6,805	
	HGU3.63-SDS	•	•		—	3⅝	11 to 30	4½	—	(36) ¼ x 2½ SDS	(24) ¼ x 2½ SDS	9,460	13,160	13,160	13,160	9,475	9,475	9,475	
3½ x 20	MIU3.56/20			•	—	3 9/16	19 5/16	2½	—	(28) 0.162 x 3½	(2) 0.148 x 1½	210	4,030	4,060	4,060	3,465	3,495	3,495	
3½ x 21 to 30	MIU3.56/20			•	✓	3 9/16	19 5/16	2½	—	(28) 0.162 x 3½	(2) 0.148 x 1½	210	4,030	4,060	4,060	3,465	3,495	3,495	
	LGU3.63-SDS	•	•		—	3⅝	8 to 30	4½	—	(16) ¼ x 2½ SDS	(12) ¼ x 2½ SDS	5,555	6,720	6,720	6,720	4,840	4,840	4,840	
	MGU3.63-SDS	•	•		—	3⅝	9¼ to 30	4½	—	(24) ¼ x 2½ SDS	(16) ¼ x 2½ SDS	7,260	9,450	9,450	9,450	6,805	6,805	6,805	
	HGU3.63-SDS	•	•		—	3⅝	11 to 30	4½	—	(36) ¼ x 2½ SDS	(24) ¼ x 2½ SDS	9,460	13,160	13,160	13,160	9,475	9,475	9,475	
4 x 9½	MIU4.12/9	•		•	—	4⅛	9 1/16	2½	—	(16) 0.162 x 3½	(2) 0.148 x 1½	210	2,305	2,615	2,820	1,980	2,245	2,425	
	HU4.12/9 / HUC4.12/9			•	✓	4⅛	8⅝	2½	Max.	(18) 0.162 x 3½	(10) 0.148 x 3	1,795	2,680	3,020	3,250	2,305	2,605	2,800	
4 x 11⅞	MIU4.12/11			•	—	4⅛	11⅛	2½	—	(20) 0.162 x 3½	(2) 0.148 x 1½	210	2,880	3,135	3,135	2,475	2,695	2,695	
	HU4.12/11 / HUC4.12/11			•	✓	4⅛	10 5/16	2½	Max.	(22) 0.162 x 3½	(10) 0.148 x 3	1,795	3,275	3,695	3,970	2,820	3,180	3,425	
4 x 14	MIU4.12/14			•	—	4⅛	13 9/16	2½	—	(22) 0.162 x 3½	(2) 0.148 x 1½	210	3,170	3,595	3,875	2,725	3,090	3,335	
	HU4.12/11 / HUC4.12/11			•	✓	4⅛	10 5/16	2½	Max.	(22) 0.162 x 3½	(10) 0.148 x 3	1,795	3,275	3,695	3,970	2,820	3,180	3,425	
4 x 16	MIU4.12/16			•	—	4⅛	15 9/16	2½	—	(24) 0.162 x 3½	(2) 0.148 x 1½	210	3,455	3,920	4,045	2,970	3,370	3,480	
	HU4.12/11 / HUC4.12/11			•	✓	4⅛	10 5/16	2½	Max.	(22) 0.162 x 3½	(10) 0.148 x 3	1,795	3,275	3,695	3,970	2,820	3,180	3,425	
4⅛ x 9½	MIU4.28/9			•	—	4 9/32	9	2½	—	(16) 0.162 x 3½	(2) 0.148 x 1½	210	2,305	2,615	2,820	1,980	2,245	2,425	
	HU4.28/9 / HUC4.28/9			•	✓	4 9/32	9	2½	—	(18) 0.162 x 3½	(8) 0.148 x 3	1,515	2,680	3,020	3,250	2,305	2,605	2,800	
4⅛ x 11⅞	MIU4.28/11			•	—	4 9/32	11⅛	2½	—	(20) 0.162 x 3½	(2) 0.148 x 1½	210	2,880	3,135	3,135	2,475	2,695	2,695	
	HU4.28/11 / HUC4.28/11			•	✓	4 9/32	11	2½	—	(22) 0.162 x 3½	(8) 0.148 x 3	1,515	3,275	3,695	3,970	2,820	3,180	3,425	
4⅛ x 14	MIU4.28/14			•	—	4 9/32	13½	2½	—	(22) 0.162 x 3½	(2) 0.148 x 1½	210	3,170	3,595	3,875	2,725	3,090	3,335	
4⅛ x 16	MIU4.28/16			•	—	4 9/32	15½	2½	—	(24) 0.162 x 3½	(2) 0.148 x 1½	210	3,455	3,920	4,045	2,970	3,370	3,480	

See footnotes on p. 152.

C-C-2021 ©2021 SIMPSON STRONG-TIE COMPANY INC.

Face-Mount Hangers — I-Joists, Glulam and SCL

SIMPSON Strong-Tie®

Codes: See p. 11 for Code Reference Key Chart.

Actual Joist Size (in.)	Model No.	Carried Member: Glulam	Carried Member: SCL	Carried Member: I-joist	Carried Member: Web Stiff Reqd.	Dimensions (in.): W	Dimensions (in.): H	Dimensions (in.): B	Min./ Max.	Fasteners (in.): Face	Fasteners (in.): Joist	Allowable Loads: DF/SP Species Header: Uplift (160)	DF/SP Species Header: Floor (100)	DF/SP Species Header: Snow (115)	DF/SP Species Header: Roof (125)	SPF/HF Species Header: Floor (100)	SPF/HF Species Header: Snow (115)	SPF/HF Species Header: Roof (125)	Code Ref.
4½ x 9½ to 20	Double 2 ¼"-wide joists use the same hangers as double 2 5/16"-wide joists with the following loads adjustments: MIU and U downloads are the lesser of the table load or 2,140 lb.																		
4⅝ x 9½	MIU4.75/9			•	—	4¾	9 1/16	2½	—	(16) 0.162 x 3½	(2) 0.148 x 1½	210	2,305	2,615	2,820	1,980	2,245	2,425	IBC, FL, LA
	U3510-2			•	✓	4¾	8¾	2	—	(14) 0.162 x 3½	(6) 0.148 x 3	970	2,015	2,285	2,465	1,735	1,965	2,120	
	HU4.75/9 / HUC4.75/9			•	✓	4¾	9	2½	—	(18) 0.162 x 3½	(8) 0.148 x 3	1,515	2,680	3,020	3,250	2,305	2,605	2,800	
4⅝ x 11⅞	MIU4.75/11			•	—	4¾	11 1/16	2½	—	(20) 0.162 x 3½	(2) 0.148 x 1½	210	2,880	3,135	3,135	2,475	2,695	2,695	
	U3512-2			•	✓	4¾	11¼	2	—	(16) 0.162 x 3½	(6) 0.148 x 3	970	2,305	2,615	2,820	1,980	2,245	2,425	
	HU4.75/11 / HUC4.75/11			•	✓	4¾	11	2½	—	(22) 0.162 x 3½	(8) 0.148 x 3	1,515	3,275	3,695	3,970	2,820	3,180	3,425	
4⅝ x 14	MIU4.75/14			•	—	4¾	13½	2½	—	(22) 0.162 x 3½	(2) 0.148 x 1½	210	3,170	3,595	3,875	2,725	3,090	3,335	
	HU3514-2 / HUC3514-2			•	✓	4¾	13¼	2½	—	(18) 0.162 x 3½	(8) 0.148 x 3	1,515	2,680	3,020	3,250	2,305	2,605	2,800	
4⅝ x 16	MIU4.75/16			•	—	4¾	15½	2½	—	(24) 0.162 x 3½	(2) 0.148 x 1½	210	3,455	3,920	4,045	2,970	3,370	3,480	
	HU3516-2 / HUC3516-2			•	✓	4¾	15¼	2½	Max.	(26) 0.162 x 3½	(12) 0.148 x 3	1,795	3,870	4,365	4,695	3,330	3,760	4,045	
4⅝ x 18	MIU4.75/18			•	—	4¾	17½	2½	—	(26) 0.162 x 3½	(2) 0.148 x 1½	210	3,745	4,045	4,045	3,220	3,480	3,480	
	HU3516-2 / HUC3516-2			•	✓	4¾	15¼	2½	Max.	(26) 0.162 x 3½	(12) 0.148 x 3	1,795	3,870	4,365	4,695	3,330	3,760	4,045	
4⅝ x 20	MIU4.75/20			•	—	4¾	19½	2½	—	(28) 0.162 x 3½	(2) 0.148 x 1½	210	4,030	4,060	4,060	3,465	3,495	3,495	
	HU3520-2			•		4¾	19¼	2½	Max.	(26) 0.162 x 3½	(12) 0.148 x 3	1,795	3,870	4,365	4,695	3,330	3,760	4,045	
4⅝ x 21 to 30	MIU4.75/20			•	✓	4¾	19½	2½	—	(28) 0.162 x 3½	(2) 0.148 x 1½	210	4,030	4,060	4,060	3,465	3,495	3,495	
	HU3520-2			•		4¾	19¼	2½	Max.	(26) 0.162 x 3½	(12) 0.148 x 3	1,795	3,870	4,365	4,695	3,330	3,760	4,045	
5 x 9½	MIU5.12/9			•	—	5⅛	8 13/16	2½	—	(16) 0.162 x 3½	(2) 0.148 x 1½	210	2,305	2,615	2,820	1,980	2,245	2,425	
	HU310-2 / HUC310-2			•	✓	5⅛	7 13/16	2½	—	(14) 0.162 x 3½	(6) 0.148 x 3	1,135	2,085	2,350	2,530	1,795	2,025	2,170	
5 x 11⅞	MIU5.12/11			•	—	5⅛	11⅛	2½	—	(20) 0.162 x 3½	(2) 0.148 x 1½	210	2,880	3,135	3,135	2,475	2,695	2,695	
	HU312-2 / HUC312-2			•	✓	5⅛	10⅝	2½	—	(16) 0.162 x 3½	(6) 0.148 x 3	1,135	2,380	2,685	2,890	2,050	2,315	2,490	
5 x 14	MIU5.12/14			•	—	5⅛	13 5/16	2½	—	(22) 0.162 x 3½	(2) 0.148" x 1½	210	3,170	3,595	3,875	2,725	3,090	3,335	
	HU314-2 / HUC314-2			•	✓	5⅛	12⅝	2½	—	(18) 0.162 x 3½	(8) 0.148 x 3	1,515	2,680	3,020	3,250	2,305	2,605	2,800	
5 x 16	MIU5.12/16			•	—	5⅛	15 5/16	2½	—	(24) 0.162 x 3½	(2) 0.148 x 1½	210	3,455	3,920	4,045	2,970	3,370	3,480	
	HU314-2 / HUC314-2			•	✓	5⅛	12⅝	2½	—	(18) 0.162 x 3½	(8) 0.148 x 3	1515	2,680	3,020	3,250	2,305	2,605	2,800	
5 x 18	MIU5.12/18			•	—	5⅛	17 5/16	2½	—	(26) 0.162 x 3½	(2) 0.148 x 1½	210	3,745	4,045	4,045	3,220	3,480	3,480	
	HU314-2 / HUC314-2			•	✓	5⅛	12⅝	2½	—	(18) 0.162 x 3½	(8) 0.148 x 3	1515	2,680	3,020	3,250	2,305	2,605	2,800	
5 x 20	MIU5.12/20			•	—	5⅛	19 5/16	2½	—	(28) 0.162 x 3½	(2) 0.148 x 1½	210	4,030	4,060	4,060	3,465	3,495	3,495	
	HU314-2 / HUC314-2			•	✓	5⅛	12⅝	2½	—	(18) 0.162 x 3½	(8) 0.148 x 3	1515	2,680	3,020	3,250	2,305	2,605	2,800	
5 x 21 to 30	MIU5.12/20			•	✓	5⅛	19 5/16	2½	—	(28) 0.162 x 3½	(2) 0.148 x 1½	210	4,030	4,060	4,060	3,465	3,495	3,495	
5⅛ glulam	HUCQ5.25/9-SDS	•			—	5¼	9	3	—	(12) ¼ x 2½ SDS	(6) ¼ x 2½ SDS	2,265	4,500	4,500	4,500	3,240	3,240	3,240	
	HUCQ5.25/11-SDS	•			—	5¼	11	3	—	(14) ¼ x 2½ SDS	(6) ¼ x 2½ SDS	2,265	5,045	5,045	5,045	3,630	3,630	3,630	
	LGU5.25-SDS	•			—	5¼	8 to 30	4½	—	(16) ¼ x 2½ SDS	(12) ¼ x 2½ SDS	5,555	6,720	6,720	6,720	4,840	4,840	4,840	
	MGU5.25-SDS	•			—	5¼	9¼ to 30	4½	—	(24) ¼ x 2½ SDS	(16) ¼ x 2½ SDS	7,260	9,450	9,450	9,450	6,805	6,805	6,805	
	HGUS5.25/10	•			—	5¼	9 1/16	4	—	(46) 0.162 x 3½	(16) 0.162 x 3½	4,095	9,100	9,100	9,100	7,825	7,825	7,825	
	HGU5.25-SDS	•			—	5¼	11 to 30	5¼	—	(36) ¼ x 2½ SDS	(24) ¼ x 2½ SDS	9,460	13,160	13,160	13,160	9,475	9,475	9,475	
	HU5.125/12 / HUC5.125/12	•			—	5¼	10¼	2½	—	(22) 0.162 x 3½	(8) 0.162 x 3½	1,515	3,275	3,695	3,970	2,820	3,180	3,425	
	HGUS5.25/12	•			—	5¼	10 9/16	4	—	(56) 0.162 x 3½	(20) 0.162 x 3½	5,205	11,915	13,330	14,290	10,280	12,420	12,420	
	HU5.125/13.5 / HUC5.125/13.5	•			—	5¼	13¼	2½	—	(26) 0.162 x 3½	(12) 0.162 x 3½	2,695	3,870	4,365	4,695	3,330	3,760	4,045	
	HU5.125/16/ HUC5.125/16	•			—	5¼	13⅞	2½	—	(26) 0.162 x 3½	(12) 0.162 x 3½	2,695	3,870	4,365	4,695	3,330	3,760	4,045	
5¼ x 7¼	HU68 / HUC68		•		—	5½	5 13/16	2½	Min.	(10) 0.162 x 3½	(4) 0.148 x 3½	760	1,490	1,680	1,805	1,280	1,445	1,555	
						5½	5 13/16	2½	Max.	(14) 0.162 x 3½	(6) 0.148 x 3½	1,135	2,085	2,350	2,530	1,795	2,025	2,180	
	HGUS5.50/8		•		—	5½	6 15/16	4	—	(36) 0.162 x 3½	(12) 0.162 x 3½	3,235	7,460	7,460	7,460	6,415	6,415	6,415	

See footnotes on p. 152.

C-C-2021 ©2021 SIMPSON STRONG-TIE COMPANY INC.

Face-Mount Hangers — I-Joists, Glulam and SCL

SIMPSON Strong-Tie

These products are available with additional corrosion protection. For more information, see p. 14.

SS For stainless-steel fasteners, see p. 21.

Codes: See p. 11 for Code Reference Key Chart.

Actual Joist Size (in.)	Model No.	Carried Member: Glulam	Carried Member: SCL	Carried Member: I-joist	Carried Member: Web Stiff Reqd.	Dimensions (in.): W	Dimensions (in.): H	Dimensions (in.): B	Min./Max.	Fasteners (in.): Face	Fasteners (in.): Joist	Allowable Loads: DF/SP Species Header: Uplift (160)	DF/SP Species Header: Floor (100)	DF/SP Species Header: Snow (115)	DF/SP Species Header: Roof (125)	SPF/HF Species Header: Floor (100)	SPF/HF Species Header: Snow (115)	SPF/HF Species Header: Roof (125)	Code Ref.
5¼ x 9½	HU610 / HUC610		•		—	5½	7⅝	2½	Min.	(14) 0.162 x 3½	(6) 0.162 x 3½	1,345	2,085	2,350	2,530	1,795	2,025	2,180	IBC, FL, LA
						5½	7⅝	2½	Max.	(18) 0.162 x 3½	(8) 0.162 x 3½	1,795	2,680	3,020	3,250	2,305	2,605	2,800	
	HGUS5.50/10		•		—	5½	8 15/16	4	—	(46) 0.162 x 3½	(16) 0.162 x 3½	4,095	9,100	9,100	9,100	7,825	7,825	7,825	
	HHUS5.50/10		•		—	5½	9	3	—	(30) 0.162 x 3½	(10) 0.162 x 3½	3,565	5,635	6,380	6,880	4,845	5,490	5,915	
	HUCQ610-SDS		•		—	5½	9	3	—	(12) ¼ x 2½ SDS	(6) ¼ x 2½ SDS	2,325	4,680	5,185	5,185	3,370	3,735	3,735	
	MGU5.50-SDS		•		—	5½	9¼ to 30	4½	—	(24) ¼ x 2½ SDS	(16) ¼ x 2½ SDS	7,260	9,450	9,450	9,450	6,805	6,805	6,805	
5¼ x 11⅞	HHUS5.50/10		•		—	5½	9	3	—	(30) 0.162 x 3½	(10) 0.162 x 3½	3,565	5,635	6,380	6,880	4,845	5,490	5,915	
	MGU5.50-SDS				—	5½	9¼ to 30	4½		(24) ¼ x 2½ SDS	(16) ¼ x 2½ SDS	7,260	9,450	9,450	9,450	6,805	6,805	6,805	
	HU612 / HUC612		•		—	5½	9⅜	2½	Min.	(16) 0.162 x 3½	(6) 0.162 x 3½	1,345	2,380	2,685	2,890	2,050	2,315	2,490	
						5½	9⅜	2½	Max.	(22) 0.162 x 3½	(8) 0.162 x 3½	1,795	3,275	3,695	3,970	2,820	3,180	3,425	
	HGUS5.50/12		•		—	5½	10½	4	—	(56) 0.162 x 3½	(20) 0.162 x 3½	5,205	11,915	13,330	14,290	10,280	12,420	12,420	
SS	HUCQ612-SDS		•		—	5½	11	3	—	(14) ¼ x 2½ SDS	(6) ¼ x 2½ SDS	2,325	5,185	5,185	5,185	3,735	3,735	3,735	
5¼ x 14	HHUS5.50/10		•		—	5½	9	3	—	(30) 0.162 x 3½	(10) 0.162 x 3½	3,565	5,635	6,380	6,880	4,845	5,490	5,915	
	MGU5.50-SDS				—	5½	9¼ to 30	4½	—	(24) ¼ x 2½ SDS	(16) ¼ x 2½ SDS	7,260	9,450	9,450	9,450	6,805	6,805	6,805	
SS	HUCQ612-SDS		•		—	5½	11	3	—	(14) ¼ x 2½ SDS	(6) ¼ x 2½ SDS	2,325	5,185	5,185	5,185	3,735	3,735	3,735	
	HGU5.50-SDS				—	5½	11 to 30	5¼	—	(36) ¼ x 2½ SDS	(24) ¼ x 2½ SDS	9,460	13,160	13,160	13,160	9,475	9,475	9,475	
	HGUS5.50/14		•		—	5½	12½	4	—	(66) 0.162 x 3½	(22) 0.162 x 3½	5,360	13,860	14,350	14,350	11,960	12,420	12,420	
	HU616 / HUC616		•		—	5½	12 11/16	2½	Min.	(20) 0.162 x 3½	(8) 0.162 x 3½	1,795	2,975	3,360	3,610	2,565	2,895	3,110	
						5½	12 11/16	2½	Max.	(26) 0.162 x 3½	(12) 0.162 x 3½	2,695	3,870	4,365	4,695	3,330	3,760	4,045	
	HHGU5.50-SDS				—	5½	13 to 30	5¼	—	(44) ¼ x 2½ SDS	(28) ¼ x 2½ SDS	14,145	17,345	17,345	17,345	12,490	12,490	12,490	
5¼ x 16	HHUS5.50/10		•		—	5½	9	3	—	(30) 0.162 x 3½	(10) 0.162 x 3½	3,565	5,635	6,380	6,880	4,845	5,490	5,915	
	MGU5.50-SDS				—	5½	9¼ to 30	4½	—	(24) ¼ x 2½ SDS	(16) ¼ x 2½ SDS	7,260	9,450	9,450	9,450	6,805	6,805	6,805	
SS	HUCQ612-SDS		•		—	5½	11	3	—	(14) ¼ x 2½ SDS	(6) ¼ x 2½ SDS	2,325	5,185	5,185	5,185	3,735	3,735	3,735	
	HGU5.50-SDS				—	5½	11 to 30	5¼	—	(36) ¼ x 2½ SDS	(24) ¼ x 2½ SDS	9,460	13,160	13,160	13,160	9,475	9,475	9,475	
	HGUS5.50/14		•		—	5½	12½	4	—	(66) 0.162 x 3½	(22) 0.162 x 3½	5,360	13,860	14,350	14,350	11,960	12,420	12,420	
	HU616 / HUC616		•		—	5½	12 11/16	2½	Min.	(20) 0.162 x 3½	(8) 0.162 x 3½	1,795	2,975	3,360	3,610	2,565	2,895	3,110	
						5½	12 11/16	2½	Max.	(26) 0.162 x 3½	(12) 0.162 x 3½	2,695	3,870	4,365	4,695	3,330	3,760	4,045	
	HHGU5.50-SDS		•		—	5½	13 to 30	5¼	—	(44) ¼ x 2½ SDS	(28) ¼ x 2½ SDS	14,145	17,345	17,345	17,345	12,490	12,490	12,490	
SS	HUCQ612-SDS		•		—	5½	11	3	—	(14) ¼ x 2½ SDS	(6) ¼ x 2½ SDS	2,325	5,185	5,185	5,185	3,735	3,735	3,735	
5¼ x 18	HGUS5.50/14		•		—	5½	12½	4	—	(66) 0.162 x 3½	(22) 0.162 x 3½	5,360	13,860	14,350	14,350	11,960	12,420	12,420	
	HU616 / HUC616		•		—	5½	12 11/16	2½	Min.	(20) 0.162 x 3½	(8) 0.162 x 3½	1,795	2,975	3,360	3,610	2,565	2,895	3,110	
						5½	12 11/16	2½	Max.	(26) 0.162 x 3½	(12) 0.162 x 3½	2,695	3,870	4,365	4,695	3,330	3,760	4,045	
	HGU5.50-SDS		•		—	5½	16 to 17⅞	5¼	—	(36) ¼ x 2½ SDS	(24) ¼ x 2½ SDS	9,460	13,160	13,160	13,160	9,475	9,475	9,475	
	MGU5.50-SDS		•		—	5½	16 to 17⅞	4½	—	(24) ¼ x 2½ SDS	(16) ¼ x 2½ SDS	7,260	9,450	9,450	9,450	6,805	6,805	6,805	
	HHGU5.50-SDS		•		—	5½	16 to 17⅞	5¼	—	(44) ¼ x 2½ SDS	(28) ¼ x 2½ SDS	14,145	17,345	17,345	17,345	12,490	12,490	12,490	
5¼ x 20 to 30	MGU5.50-SDS		•		—	5½	18 to 30	4½	—	(24) ¼ x 2½ SDS	(16) ¼ x 2½ SDS	7,260	9,450	9,450	9,450	6,805	6,805	6,805	
	HGU5.50-SDS		•		—	5½	18 to 30	5¼	—	(36) ¼ x 2½ SDS	(24) ¼ x 2½ SDS	9,460	13,160	13,160	13,160	9,475	9,475	9,475	
	HHGU5.50-SDS		•		—	5½	18 to 30	5¼	—	(44) ¼ x 2½ SDS	(28) ¼ x 2½ SDS	14,145	17,345	17,345	17,345	12,490	12,490	12,490	
5½ glulam	HU610 / HUC610		•		—	5½	7⅝	2½	Max.	(18) 0.162 x 3½	(8) 0.162 x 3½	1,795	2,680	3,020	3,250	2,305	2,605	2,800	
	HGUS5.50/10	•			—	5½	8 15/16	4	—	(46) 0.162 x 3½	(16) 0.162 x 3½	4,095	9,100	9,100	9,100	7,825	7,825	7,825	
	HUCQ610-SDS	•			—	5½	9	3	—	(12) ¼ x 2½ SDS	(6) ¼ x 2½ SDS	2,325	4,680	5,185	5,185	3,370	3,735	3,735	
	HHUS5.50/10	•			—	5½	9	3	—	(30) 0.162 x 3½	(10) 0.162 x 3½	3,565	5,635	6,380	6,880	4,845	5,490	5,915	
	MGU5.62-SDS	•			—	5⅝	9¼ to 30	4½	—	(24) ¼ x 2½ SDS	(16) ¼ x 2½ SDS	7,260	9,450	9,450	9,450	6,805	6,805	6,805	
	HU612 / HUC612		•		—	5½	9⅜	2½	Max.	(22) 0.162 x 3½	(8) 0.162 x 3½	1,795	3,275	3,695	3,970	2,820	3,180	3,425	
	HUCQ612-SDS	•			—	5½	11	3	—	(14) ¼ x 2½ SDS	(6) ¼ x 2½ SDS	2,325	5,185	5,185	5,185	3,735	3,735	3,735	
	HGU5.62-SDS	•			—	5⅝	11 to 30	5¼	—	(36) ¼ x 2½ SDS	(24) ¼ x 2½ SDS	5,360	13,735	14,360	14,360	11,810	12,350	12,350	
	HGUS5.50/14	•			—	5½	12½	4	—	(66) 0.162 x 3½	(22) 0.162 x 3½	5,515	13,860	14,350	14,350	11,960	12,420	12,420	
	HU616 / HUC616		•		—	5½	13⅜	2½	Max.	(26) 0.162 x 3½	(12) 0.162 x 3½	2,695	3,870	4,365	4,695	3,330	3,760	4,045	
	HHGU5.62-SDS	•			—	5⅝	13 to 30	5¼	—	(44) ¼ x 2½ SDS	(28) ¼ x 2½ SDS	14,145	17,345	17,345	17,345	12,490	12,490	12,490	

See footnotes on p. 152.

C-C-2021 ©2021 SIMPSON STRONG-TIE COMPANY INC.

Face-Mount Hangers — I-Joists, Glulam and SCL

Codes: See p. 11 for Code Reference Key Chart.

Actual Joist Size (in.)	Model No.	Carried Member				Dimensions (in.)			Min./ Max.	Fasteners (in.)		Allowable Loads							Code Ref.
												DF/SP Species Header				SPF/HF Species Header			
		Glulam	SCL	I-joist	Web Stiff Reqd.	W	H	B		Face	Joist	Uplift (160)	Floor (100)	Snow (115)	Roof (125)	Floor (100)	Snow (115)	Roof (125)	
6¾ glulam	HGUS6.88/10	•			—	6⅞	8 13/16	4	—	(46) 0.162 x 3½	(16) 0.162 x 3½	4,095	9,100	9,100	9,100	7,825	7,825	7,825	IBC, FL, LA
	MGU7.00-SDS	•			—	7	9¼ to 30	4½	—	(24) ¼ x 2½ SDS	(16) ¼ x 2½ SDS	7,260	9,450	9,450	9,450	6,805	6,805	6,805	
	HGUS6.88/12	•			—	6⅞	10 13/16	4	—	(56) 0.162 x 3½	(20) 0.162 x 3½	5,205	11,915	13,330	14,290	10,280	12,420	12,420	
	HGUS6.88/14	•			—	6⅞	12 13/16	4	—	(66) 0.162 x 3½	(22) 0.162 x 3½	5,360	13,860	14,350	14,350	11,960	12,420	12,420	
	HGU7.00-SDS	•			—	7	11 to 30	5¼	—	(36) ¼ x 2½ SDS	(24) ¼ x 2½ SDS	9,460	13,160	13,160	13,160	9,475	9,475	9,475	
	HHGU7.00-SDS	•			—	7	13 to 30	5¼	—	(44) ¼ x 2½ SDS	(28) ¼ x 2½ SDS	14,145	17,345	17,345	17,345	12,490	12,490	12,490	
7 x 9½	HGUS7.25/10	•	•		—	7¼	8⅝	4	—	(46) 0.162 x 3½	(16) 0.162 x 3½	4,095	9,100	9,100	9,100	7,825	7,825	7,825	
	HU410-2 / HUC410-2	•	•	•		7⅛	8 9/16	2½	Max.	(18) 0.162 x 3½	(8) 0.162 x 3½	1,795	2,680	3,020	3,250	2,305	2,605	2,800	
	HHUS7.25/10	•	•		—	7¼	9	3 5/16	—	(30) 0.162 x 3½	(10) 0.162 x 3½	3,565	5,635	6,380	6,880	4,845	5,490	5,915	
7 x 11⅞	HHUS7.25/10	•	•		—	7¼	9	3 5/16	—	(30) 0.162 x 3½	(10) 0.162 x 3½	3,565	5,635	6,380	6,880	4,845	5,490	5,915	
	HGUS7.25/12	•	•		—	7¼	10⅝	4	—	(56) 0.162 x 3½	(20) 0.162 x 3½	5,205	11,915	13,330	14,290	10,280	12,420	12,420	
	HU412-2 / HUC412-2	•	•	•	✓	7⅛	10 13/16	2½	Max.	(22) 0.162 x 3½	(8) 0.162 x 3½	1,795	3,275	3,695	3,970	2,820	3,180	3,425	
	HGU7.25-SDS	•			—	7¼	11 to 30	5¼	—	(36) ¼ x 2½ SDS	(24) ¼ x 2½ SDS	9,460	13,160	13,160	13,160	9,475	9,475	9,475	
7 x 14	HHUS7.25/10	•	•		—	7¼	9	3 5/16	—	(30) 0.162 x 3½	(10) 0.162 x 3½	3,565	5,635	6,380	6,880	4,845	5,490	5,915	
	HGUS7.25/14	•	•		—	7¼	12⅝	4	—	(66) 0.162 x 3½	(22) 0.162 x 3½	5,360	13,860	14,350	14,350	11,960	12,420	12,420	
	HGU7.25-SDS	•	•		—	7¼	11 to 13⅞	5¼	—	(36) ¼ x 2½ SDS	(24) ¼ x 2½ SDS	9,460	13,160	13,160	13,160	9,475	9,475	9,475	
	HHGU7.25-SDS	•	•		—	7¼	13 to 13⅞	5¼	—	(44) ¼ x 2½ SDS	(28) ¼ x 2½ SDS	14,145	17,345	17,345	17,345	12,490	12,490	12,490	
	HU414-2 / HUC414-2	•	•	•	✓	7⅛	12 9/16	2½	Max.	(26) 0.162 x 3½	(12) 0.162 x 3½	2,695	3,870	4,365	4,695	3,330	3,760	4,045	
7 x 16	HGUS7.25/14	•	•		—	7¼	12 7/16	4	—	(66) 0.162 x 3½	(22) 0.162 x 3½	5,360	13,860	14,350	14,350	11,960	12,420	12,420	
	HGU7.25-SDS	•	•		—	7¼	11 to 15⅞	5¼	—	(36) ¼ x 2½ SDS	(24) ¼ x 2½ SDS	9,460	13,160	13,160	13,160	9,475	9,475	9,475	
	HHGU7.25-SDS	•	•		—	7¼	13 to 15⅞	5¼	—	(44) ¼ x 2½ SDS	(28) ¼ x 2½ SDS	14,145	17,345	17,345	17,345	12,490	12,490	12,490	
	HU414-2 / HUC414-2	•	•	•	✓	7⅛	12 9/16	2½	Max.	(26) 0.162 x 3½	(12) 0.162 x 3½	2,695	3,870	4,365	4,695	3,330	3,760	4,045	
7 x 18	HGUS7.25/14	•	•		—	7¼	12 7/16	4	—	(66) 0.162 x 3½	(22) 0.162 x 3½	5,360	13,860	14,350	14,350	11,960	12,420	12,420	
	HGU7.25-SDS	•	•		—	7¼	11 to 17⅞	5¼	—	(36) ¼ x 2½ SDS	(24) ¼ x 2½ SDS	9,460	13,160	13,160	13,160	9,475	9,475	9,475	
	HHGU7.25-SDS	•	•		—	7¼	13 to 17⅞	5¼	—	(44) ¼ x 2½ SDS	(28) ¼ x 2½ SDS	14,145	17,345	17,345	17,345	12,490	12,490	12,490	
	HU414-2 / HUC414-2	•	•	•	✓	7⅛	13⅞	2½	Max.	(26) 0.162 x 3½	(12) 0.162 x 3½	2,695	3,870	4,365	4,695	3,330	3,760	4,045	
7 x 20 to 30	HGU7.25-SDS	•	•		—	7¼	11 to 30	5¼	—	(36) ¼ x 2½ SDS	(24) ¼ x 2½ SDS	9,460	13,160	13,160	13,160	9,475	9,475	9,475	
	HHGU7.25-SDS	•	•		—	7¼	13 to 30	5¼	—	(44) ¼ x 2½ SDS	(28) ¼ x 2½ SDS	14,145	17,345	17,345	17,345	12,490	12,490	12,490	
8¾ glulam	HGU9.00-SDS	•			—	9	11 to 30	5¼	—	(36) ¼ x 2½ SDS	(24) ¼ x 2½ SDS	9,460	13,160	13,160	13,160	9,475	9,475	9,475	
	HHGU9.00-SDS	•			—	9	13 to 30	5¼	—	(44) ¼ x 2½ SDS	(28) ¼ x 2½ SDS	14,145	17,345	17,345	17,345	12,490	12,490	12,490	
10¾ glulam	HHGU11.00-SDS	•			—	11	13 to 30	5¼	—	(44) ¼ x 2½ SDS	(28) ¼ x 2½ SDS	14,145	17,345	17,345	17,345	12,490	12,490	12,490	

1. Uplift loads have been increased for earthquake or wind loading with no further increase allowed. Reduce where other loads govern.
2. Uplift loads are based on DF/SP. For SPF/HF, use 0.86 x DF/SP Uplift Load for products requiring nails and 0.72 x DF/SP Uplift Load for products requiring screws.
3. For minimum nailing quantity and load values, fill all round holes; for maximum nailing quantity and load values, fill all round and trianglular holes.
4. Hangers sorted in order of recommended selection for best overall performance and installation value.
5. Web stiffeners are required where noted in the table, or when the joist top flange isn't supported laterally by the hanger, or when it supports double I-joists with flanges less than 1 5/16" thick.
6. Allowable downloads are based on a joist-bearing capacity of 750 psi.
7. **Fasteners:** Nail dimensions are diameter by length. SDS screws are Simpson Strong-Tie® Strong-Drive® SDS Heavy-Duty Connector screws. See pp. 21–22 for fastener information.

C-C-2021 ©2021 SIMPSON STRONG-TIE COMPANY INC.

THAI

Adjustable Hanger

Designed for I-joists, the THAI has extra long straps and can be field-formed to give height adjustability and top-flange hanger convenience. Positive-angle nailing helps eliminate splitting of the I-joist's bottom flange.

Material: THAI-2 — 14 gauge; all others — 18 gauge

Finish: Galvanized

Installation:

- Factory-order the THAI-2 for hanger width needed. See table for allowable widths.
- Use all specified fasteners. Verify that the header can take the fasteners specified in the table.
- Web stiffeners are required for all I-joists used with these hangers.
- When a total of 20 face nails are used in THAI straps, or 30 face nails are used in THAI-2 straps, the maximum load-carrying capacity is achieved.
- Reduce load given by allowable nail shear capacity for each nail less than maximum.
- A minimum nailing configuration is shown for top nailing installations. The strap must be field-formed over the top of the header by a minimum of 2½".
- Uplift — Lowest face nails must be filled to achieve uplift loads.

Codes: See p. 11 for Code Reference Key Chart

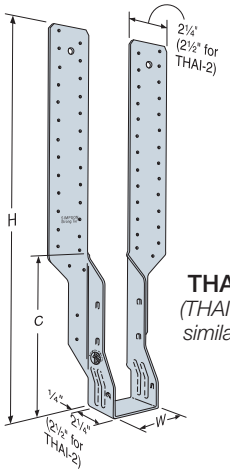

THAI
(THAI-2 similar)

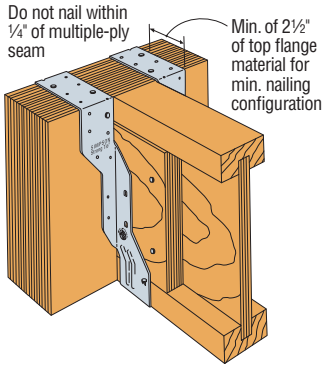

Typical THAI Installation with Minimum Nailing Configuration

Joist Dimensions (in.)		Model No.	Hanger Dimensions (in.)			Code Ref.
Width	Depth		W_1	H	C	
1½	9¼ – 14	THAI222	1 9/16	22⅞	9⅜	IBC, FL, LA
1¾	9¼ – 14	THAI1.81/22	1 13/16	22¾	9¼	
2	9¼ – 14	THAI2.06/22	2 1/16	22⅝	9⅛	
2 1/16	9¼ – 14	THAI2.1/22	2⅛	22 9/16	9⅛	
2¼ to 2 5/16	9¼ – 14	THAI3522	2 5/16	22½	9	
2½	9¼ – 14	THAI322	2 9/16	22⅜	8⅞	
3½	9¼ – 14	THAI422	3 9/16	21⅞	8⅜	
3 to 5¼	9¼ – 14	THAI-2	3⅛ to 5 5/16	21 11/16	8 13/16	—

1. The W dimension should be ordered at 1/16" to ⅛" greater than the joist width.

Allowable Loads for Various Headers

Nailing Options	Fasteners (in.)			Allowable Loads										
					LVL Header			DF/SP Header			SPF/HF Header		
	Top	Face	Joist	Uplift (160)	Floor (100)	Snow (115)	Roof (125)	Floor (100)	Snow (115)	Roof (125)	Floor (100)	Snow (115)	Roof (125)
THAI minimum	(4) 0.148 x 1½	(2) 0.148 x 1½	(2) 0.148 x 1½	—	1,350	1,350	1,350	1,325	1,325	1,325	1,070	1,070	1,070
	(4) 0.148 x 3	(2) 0.148 x 3	(2) 0.148 x 1½	—	1,465	1,465	1,465	1,735	1,735	1,735	1,680	1,680	1,680
THAI maximum	—	(20) 0.148 x 3	(2) 0.148 x 1½	185	2,080	2,080	2,080	2,080	2,080	2,080	1,790	1,790	1,790
THAI-2 minimum	(4) 0.148 x 3	(2) 0.148 x 3	(2) 0.148 x 1½	—	1,445	1,445	1,445	2,095	2,095	2,095	2,095	2,095	2,095
THAI-2 maximum	—	(30) 0.148 x 3	(2) 0.148 x 1½	185	3,390	3,900	4,135	3,390	3,900	4,135	2,940	3,310	3,310

1. Uplift loads have been increased for earthquake or wind loading with no further increase allowed. Reduce where other loads govern.
2. Uplift loads are based on DF/SP lumber. For SPF/HF, use 0.86 x DF/SP uplift load.
3. The minimum header depth to achieve the maximum nail configuration is 16".
4. For the THAI3522 supporting a 2¼" joist, the download shall be the lesser of the table load or 1,400 lb.
5. **Fasteners:** Nail dimensions are listed diameter by length. See pp. 21–22 for fastener information.

THAI Allowable Loads for Top-Flange Min. Nailing Installation on Nailers

Model	Nailer	Top (in.)	Face (in.)	Joist (in.)	Uplift (160)	Allowable Loads (100/115/125)	
						DF/SP	SPF/HF
THAI Series	2x	(4) 0.148 x 1½	(2) 0.148 x 1½	(2) 0.148 x 1½	—	1,245	1,070
	Min. 2–2x	(4) 0.148 x 3	(2) 0.148 x 3	(2) 0.148 x 1½	—	1,735	1,680
THAI-2	Min. 2–2x	(4) 0.148 x 3	(2) 0.148 x 3	(2) 0.148 x 1½	—	2,095	2,095

1. Loads for 2x nailers are applicable to single 4x2 top chord carrying members provided the hanger is located at a top chord panel point and there is no splice at that panel point location.
2. Attachment of nailer to supporting member is the responsibility of the designer.
3. **Fasteners:** Nail dimensions are listed diameter by length. See pp. 21–22 for fastener information.

C-C-2021 ©2021 SIMPSON STRONG-TIE COMPANY INC.

SUR/SUL/HSUR/HSUL

Skewed 45° Hangers

This product is preferable to similar connectors because of (a) easier installation, (b) higher loads, (c) lower installed cost, or a combination of these features.

The SUR/L1.81, 2.06, 2.1, 2.37, 2.56 and HSUR/L series are 45° skewed hangers designed specifically to ease the installation of single and double I-joists. In addition to Positive Angle Nailing these hangers encapsulate the top flange of the I-joist, so no web stiffeners are required for standard installation.

The full range of 45° skewed hangers feature obround nail holes on the acute side, allowing nails to be easily installed parallel to the joist. Installation is further simplified with no required bevel cuts.

Material: See table on p. 155

Finish: Galvanized. Some products available in ZMAX® coating; See Corrosion Information, pp. 12–15.

Installation:

- Use all specified fasteners; see General Notes.
- Illustrations show left and right skews SUR/L (SUR = skewed right; SUL = skewed left).
- The joist end may be square cut or bevel cut.
- Fill all round and obround nail holes with specified fasteners to achieve table loads. Where noted, triangle holes in the joist flange may be filled for additional uplift capacity (see footnote on p. 155).
- For I-joists with flanges less than 1 5/16", web stiffeners are required for all double joist hangers when using hangers that are 14 gauge and lighter.

Options:

- These hangers cannot be modified but will accommodate a 40° to 50° skewed joist.
- Available with the A_2 flange turned in on (2) 2x and 4x models only (see illustration). For example, specify HSURC410, HSULC410, SURC210-2 or SULC210-2.

Codes: See p. 11 for Code Reference Key Chart

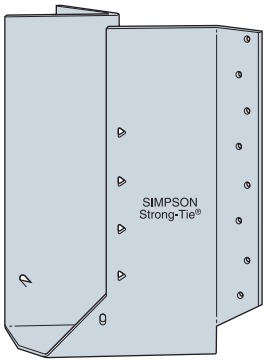

SUL2.56/11

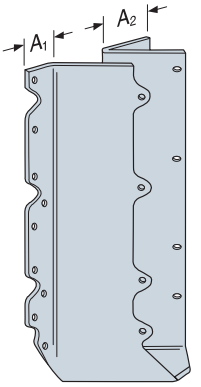

HSUR414

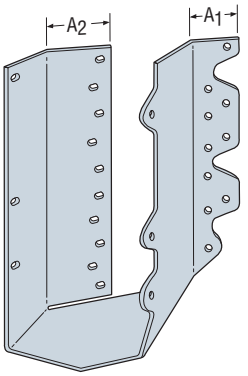

HSULC
Available for 3"- and 3½"-wide joists only

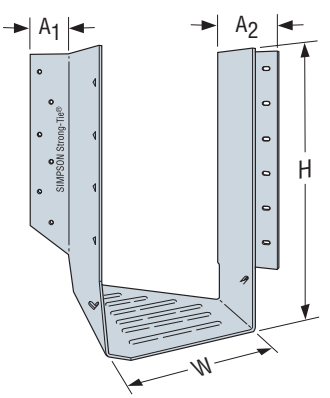

HSUR4.12/9

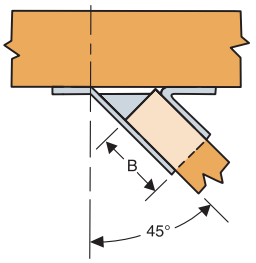

Typical SUR Installation with Square Cut Joist
(HSUR similar)

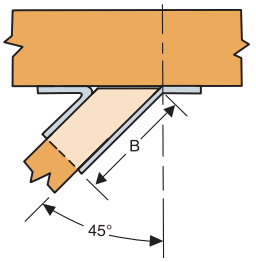

Typical SUL Installation with Bevel Cut Joist
(HSUL similar)

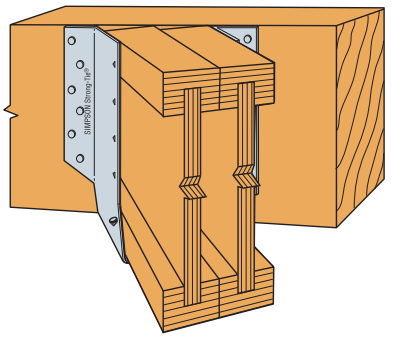

Typical HSUR4.12/9 Installation

C-C-2021 ©2021 SIMPSON STRONG-TIE COMPANY INC.

SUR/SUL/HSUR/HSUL

Skewed 45° Hangers (cont.)

These products are available with additional corrosion protection. For more information, see p. 14.

SS For stainless-steel fasteners, see p. 21.

SD Many of these products are approved for installation with Strong-Drive® SD Connector screws. See pp. 348–352 for more information.

Actual Joist Size (in.)	Model No.	Web Stiff Reqd.	Ga.	Dimensions (in.)					Fasteners (in.)		Allowable Loads								Code Ref.
											DF/SP Species Header				SPF/HF Species Header				
				W	H	B	A_1	A_2	Face	Joist	Uplift (160)	Floor (100)	Snow (115)	Roof (125)	Uplift (160)	Floor (100)	Snow (115)	Roof (125)	
SS 1½x9¼-12	SUR/L210	✓	16	1 9/16	8 3/16	2	1⅛	1 5/16	(10) 0.162 x 3½	(10) 0.148 x 1½	1,250	1,440	1,630	1,760	1,075	1,240	1,400	1,515	IBC, FL, LA
1½x10-16	SUR/L214	✓	16	1 9/16	10	2	1⅛	1 5/16	(12) 0.162 x 3½	(12) 0.148 x 1½	1,890	1,730	1,955	2,110	1,625	1,490	1,680	1,815	
1¾x9¼-9½	SUR/L1.81/9	—	16	1 13/16	9	3	1⅝	2 5/16	(12) 0.162 x 3½	(2) 0.148 x 1½	175	1,730	1,945	1,945	150	1,490	1,675	1,675	
1¾x11¼-11⅞	SUR/L1.81/11	—	16	1 13/16	11	3	1⅝	2 5/16	(16) 0.162 x 3½	(2) 0.148 x 1½	175	2,305	2,465	2,465	150	1,980	2,120	2,120	
1¾x14	SUR/L1.81/14	—	16	1 13/16	13¾	3	1⅝	2 5/16	(20) 0.162 x 3½	(2) 0.148 x 1½	175	2,470	2,470	2,470	150	2,125	2,125	2,125	
2x9½	SUR/L2.06/9	—	16	2 1/16	9 1/16	3 3/16	1⅝	2⅛	(14) 0.162 x 3½	(2) 0.148 x 1½	175	2,015	2,285	2,465	150	1,735	1,965	2,120	
2x11⅞	SUR/L2.06/11	—	16	2 1/16	11¼	3 3/16	1⅝	2⅛	(16) 0.162 x 3½	(2) 0.148 x 1½	175	2,305	2,525	2,525	150	1,980	2,170	2,170	
2x14	SUR/L2.06/14	—	16	2 1/16	13⅝	3 3/16	1⅝	2⅛	(18) 0.162 x 3½	(2) 0.148 x 1½	175	2,525	2,525	2,525	150	2,170	2,170	2,170	
2x16	SUR/L2.06/14	✓	16	2 1/16	13⅝	3 3/16	1⅝	2⅛	(18) 0.162 x 3½	(2) 0.148 x 1½	175	2,525	2,525	2,525	150	2,170	2,170	2,170	
2 1/16x9½	SUR/L2.1/9	—	16	2⅛	9 1/16	3 3/16	1 9/16	2⅛	(14) 0.162 x 3½	(2) 0.148 x 1½	175	2,015	2,285	2,465	150	1,735	1,965	2,120	
2 1/16x11⅞	SUR/L2.1/11	—	16	2⅛	11 3/16	3 3/16	1 9/16	2⅛	(16) 0.162 x 3½	(2) 0.148 x 1½	175	2,305	2,525	2,525	150	1,980	2,170	2,170	
2 1/16x14	SUR/L2.1/14	—	16	2⅛	13 9/16	3 3/16	1 9/16	2⅛	(18) 0.162 x 3½	(2) 0.148 x 1½	175	2,525	2,525	2,525	150	2,170	2,170	2,170	
2 1/16x16	SUR/L2.1/14	✓	16	2⅛	13 9/16	3 3/16	1 9/16	2⅛	(18) 0.162 x 3½	(2) 0.148 x 1½	175	2,525	2,525	2,525	150	2,170	2,170	2,170	
2¼-2 5/16x9½	SUR/L2.37/9	—	16	2⅜	8 15/16	3 3/16	1 5/16	2⅛	(14) 0.162 x 3½	(2) 0.148 x 1½	175	2,015	2,285	2,465	150	1,735	1,965	2,120	
2¼-2 5/16x11⅞	SUR/L2.37/11	—	16	2⅜	11 3/16	3 3/16	1 5/16	2⅛	(16) 0.162 x 3½	(2) 0.148 x 1½	175	2,305	2,525	2,525	150	1,980	2,170	2,170	
2¼-2 5/16x14	SUR/L2.37/14	—	16	2⅜	13 7/16	3 3/16	1 5/16	2⅛	(18) 0.162 x 3½	(2) 0.148 x 1½	175	2,525	2,525	2,525	150	2,170	2,170	2,170	
2¼-2 5/16x16	SUR/L2.37/14	✓	16	2⅜	13 7/16	3 3/16	1 5/16	2⅛	(18) 0.162 x 3½	(2) 0.148 x 1½	175	2,525	2,525	2,525	150	2,170	2,170	2,170	
2½x9½ (3x10,12)	SUR/L2.56/9	—	16	2 9/16	8 13/16	3 3/16	1⅛	2⅛	(14) 0.162 x 3½	(2) 0.148 x 1½	210	2,015	2,280	2,465	180	1,735	1,960	2,120	
2½-2 9/16x 11¼-11⅞	SUR/L2.56/11	—	16	2 9/16	11 3/16	3 3/16	1⅛	2⅛	(16) 0.162 x 3½	(2) 0.148 x 1½	210	2,305	2,610	2,665	180	1,980	2,245	2,290	
2½x14 (3x14)	SUR/L2.56/14	—	16	2 9/16	13 5/16	3 3/16	1⅛	2⅛	(18) 0.162 x 3½	(2) 0.148 x 1½	210	2,525	2,525	2,525	180	2,170	2,170	2,170	
2½x16	SUR/L2.56/14	✓	16	2 9/16	13 5/16	3 3/16	1⅛	2⅛	(18) 0.162 x 3½	(2) 0.148 x 1½	210	2,525	2,525	2,525	180	2,170	2,170	2,170	
3x9¼-14	SUR/L210-2	✓	16	3⅛	8 1/16	2⅝	1 7/16	2⅜	(14) 0.162 x 3½	(6) 0.162 x 2½	1,150	2,015	2,280	2,345	990	1,735	1,960	2,015	
	HSUR/L210-2	✓	14	3⅛	8 1/16	2 7/16	1¼	2⅜	(20) 0.162 x 3½	(6) 0.162 x 2½	1,150	2,980	3,360	3,410	990	2,565	2,890	2,935	
3x14-20	SUR/L214-2	✓	16	3⅛	12 11/16	2 7/16	1 7/16	2⅜	(18) 0.162 x 3½	(8) 0.162 x 2½	1,580	2,265	2,265	2,265	1,360	1,950	1,950	1,950	
	HSUR/L214-2	✓	14	3⅛	12 11/16	2 7/16	1¼	2 3/16	(26) 0.162 x 3½	(8) 0.162 x 2½	1,490	3,875	4,370	4,680	1,280	3,335	3,760	4,025	
3½x9¼-14	SUR/L410	✓	16	3 9/16	8½	2⅝	1	2⅜	(14) 0.162 x 3½	(6) 0.162 x 3½	1,140	2,015	2,245	2,245	980	1,735	1,930	1,930	
	HSUR/L410	✓	14	3 9/16	8½	2 7/16	1	2 3/16	(20) 0.162 x 3½	(6) 0.162 x 3½	1,150	2,980	3,360	3,410	990	2,565	2,890	2,935	
3½x14-20	SUR/L414	✓	16	3 9/16	12½	2⅝	1	2⅜	(18) 0.162 x 3½	(8) 0.162 x 3½	1,490	2,400	2,400	2,400	1,280	2,065	2,065	2,065	
	HSUR/L414	✓	14	3 9/16	12½	2 7/16	1	2 3/16	(26) 0.162 x 3½	(8) 0.162 x 3½	1,490	3,875	4,370	4,680	1,280	3,335	3,760	4,025	
4x9½	HSUR/L4.12/9	—	14	4⅛	9	3	1 7/16	2⅜	(12) 0.162 x 3½	(2) 0.148 x 1½	165	1,785	2,015	2,025	140	1,535	1,735	1,740	
4x11⅞	HSUR/L4.12/11	—	14	4⅛	11⅛	3	1 7/16	2⅜	(16) 0.162 x 3½	(2) 0.148 x 1½	165	2,380	2,685	2,890	140	2,045	2,310	2,485	
4x14	HSUR/L4.12/14	—	14	4⅛	13¾	3	1 7/16	2⅜	(20) 0.162 x 3½	(2) 0.148 x 1½	165	2,975	3,330	3,330	140	2,560	2,865	2,865	
4x16	HSUR/L4.12/16	—	14	4⅛	15¾	3	1 7/16	2⅜	(24) 0.162 x 3½	(2) 0.148 x 1½	165	3,330	3,330	3,330	140	2,865	2,865	2,865	
4⅛x9½	HSUR/L4.28/9	—	14	4 5/16	9	3	1 7/16	2⅜	(12) 0.162 x 3½	(2) 0.148 x 1½	165	1,785	2,015	2,025	140	1,535	1,735	1,740	
4⅛x11⅞	HSUR/L4.28/11	—	14	4 5/16	11⅛	3	1 7/16	2⅜	(16) 0.162 x 3½	(2) 0.148 x 1½	165	2,380	2,685	2,890	140	2,045	2,310	2,485	
4⅛x14-16	HSUR/L4.28/11	✓	14	4 5/16	11⅛	3	1 7/16	2⅜	(16) 0.162 x 3½	(2) 0.148 x 1½	165	2,380	2,685	2,890	140	2,045	2,310	2,485	
4⅝x9½	HSUR/L4.75/9	—	14	4¾	8 15/16	2¾	1 7/16	2⅜	(12) 0.162 x 3½	(2) 0.148 x 1½	165	1,785	2,015	2,025	140	1,535	1,735	1,740	
4⅝x11⅞	HSUR/L4.75/11	—	14	4¾	10 15/16	2¾	1 7/16	2⅜	(16) 0.162 x 3½	(2) 0.148 x 1½	165	2,380	2,685	2,890	140	2,045	2,310	2,485	
4⅝x14	HSUR/L4.75/14	—	14	4¾	13¾	2¾	1 7/16	2⅜	(20) 0.162 x 3½	(2) 0.148 x 1½	165	2,975	3,330	3,330	140	2,560	2,865	2,865	
4⅝x16	HSUR/L4.75/16	—	14	4¾	15¾	2¾	1 7/16	2⅜	(24) 0.162 x 3½	(2) 0.148 x 1½	165	3,330	3,330	3,330	140	2,865	2,865	2,865	
5x9½	HSUR/L5.12/9	—	14	5⅛	9	2 13/16	1 7/16	2⅜	(12) 0.162 x 3½	(2) 0.148 x 1½	165	1,785	2,015	2,025	140	1,535	1,735	1,740	
5x11⅞	HSUR/L5.12/11	—	14	5⅛	11	2 13/16	1 7/16	2⅜	(16) 0.162 x 3½	(2) 0.148 x 1½	165	2,380	2,685	2,890	140	2,045	2,310	2,485	
5x14	HSUR/L5.12/14	—	14	5⅛	13¾	2 13/16	1 7/16	2⅜	(20) 0.162 x 3½	(2) 0.148 x 1½	165	2,975	3,330	3,330	140	2,560	2,865	2,865	
5x16	HSUR/L5.12/16	—	14	5⅛	15¾	2 13/16	1 7/16	2⅜	(24) 0.162 x 3½	(2) 0.148 x 1½	165	3,330	3,330	3,330	140	2,865	2,865	2,865	

1. Uplift loads have been increased for earthquake or wind loading with no further increase allowed. Reduce where other loads govern.
2. Triangular nail holes may be filled with 0.148" x 1½" nails for additional uplift (requires web stiffeners).
   - SUR/SUL 9" and 11", SUR/SUL1.81/14, and all HSUR/HSUL models have additional holes that, when filled, can resist 795 lb. for DF/SP or 685 lb. for SPF/HF.
   - SUR/SUL 14" models have (6) additional holes that, when filled, can resist 1,190 lb. for DF/SP and 1,025 lb. for SPF/HF.
3. When the supported member is an I-joist with flanges less than 1 5/16" thick, the allowable uplift shall not exceed 190 lb. without web stiffeners.
4. Allowable downloads are based on a joist-bearing capacity of 750 psi.
5. **Fasteners:** Nail dimensions are listed diameter by length. See pp. 21–22 for fastener information.

C-C-2021 ©2021 SIMPSON STRONG-TIE COMPANY INC.

LSSR/LSU

Slopeable/Skewable Rafter Hanger

This product is preferable to similar connectors because of (a) easier installation, (b) higher loads, (c) lower installed cost, or a combination of these features.

The patent-pending LSSR slopeable/skewable rafter hanger is the next generation of field-adjustable rafter hangers. One of its key features is it can be installed after the rafter has been tacked into place. A versatile hanger, it is field adjustable for skews up to 45° and features an innovative hinged swivel seat which adjusts up to a 45° slope. New models are now available for single 2x truss members. See pp. 118–119 for more information.

Features:

- Makes it possible to install after the rafters are already in place
- Flange design allows for easy skew adjustment, from 0° to 45°
- Swivel seat adjusts easily from 0° to 45° up or down, and attaches to both sides of I-joist

Material: See table on p. 157

Finish: ZMAX® coating

Installation:

- Use all specified fasteners; see General Notes
- For a common rafter:
  - Slide hanger into position; Adjust seat and install seat nails
  - Make sure side stirrups are snug close to the joist; bend lines are plumb
  - Install a face nail on each side to hold in place
  - Install all round and obround holes on the header and joist
- For jack rafters:
  - Fold acute side forward
  - Slide hanger into position; adjust seat and install seat nails
  - Make sure hanger is snug close to the joist; bend line is plumb
  - Install obround nails on acute side, both header and joist
  - Make sure hanger is snug close to the joist and header; bend line is plumb
  - Install joist nails on obtuse side
  - Bend obtuse side flange back so that header flange is flush against header
  - Install header nails

Codes: See p. 11 for Code Reference Key Chart

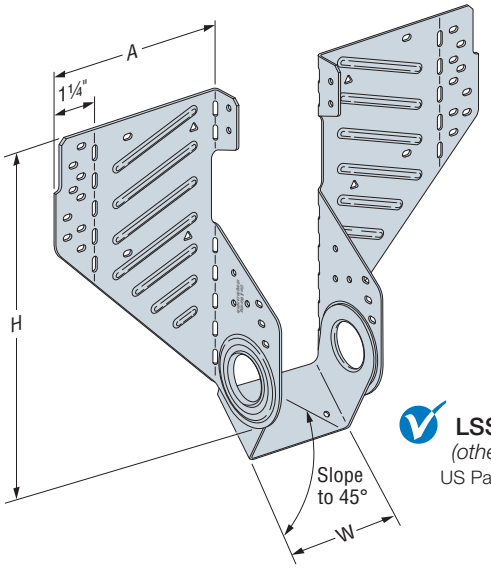

LSSR210-2
(others similar)
US Patent Pending

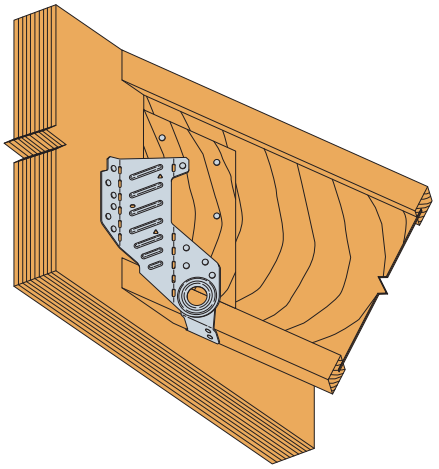

Typical LSSR Sloped and Skewed Installation

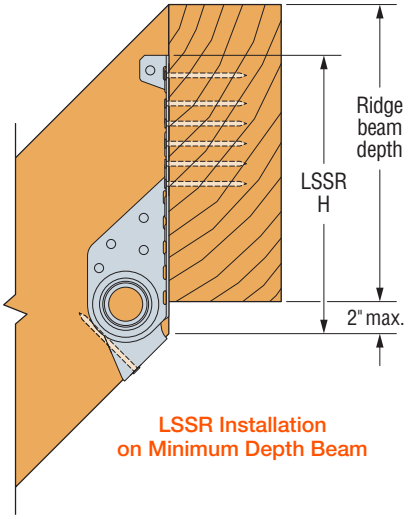

LSSR Installation on Minimum Depth Beam

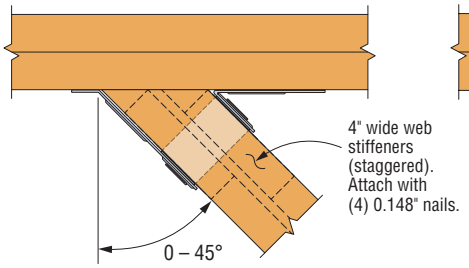

Typical LSSR Installation
(compound miter cut)

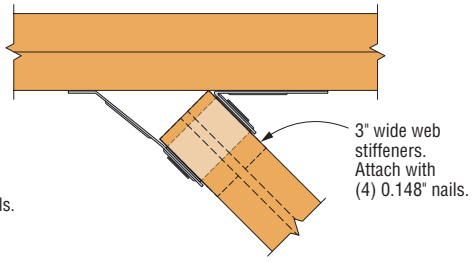

Alternate LSSR Installation
(plumb cut)

To watch an installation video, go to **strongtie.com/lssr**.

C-C-2021 ©2021 SIMPSON STRONG-TIE COMPANY INC.

LSSR/LSU

Slopeable/Skewable Rafter Hanger (cont.)

These products are available with additional corrosion protection. For more information, see p. 14.

Actual Joist Width (in.)	Model No.	Ga.	Dimensions (in.) W	Dimensions (in.) H	Dimensions (in.) A	Fasteners (in.) Face	Fasteners (in.) Joist	Allowable Loads DF/SP Species Header Uplift (160)	DF/SP Floor (100)	DF/SP Roof Snow (115)	DF/SP Roof Const. (125)	SPF/HF Species Header Uplift (160)	SPF/HF Floor (100)	SPF/HF Roof Snow (115)	SPF/HF Roof Const. (125)	Code Ref.
Sloped Only Hangers																
1¾	LSSR1.81Z	18	1 13/16	8 15/16	4⅛	(14) 0.148 x 2½	(12) 0.148 x 1½	510	1,565	1,565	1,565	440	1,345	1,345	1,345	IBC, FL, LA
2 to 2 1/16	LSSR2.1Z	18	2⅛	8 15/16	4⅛	(14) 0.148 x 2½	(12) 0.148 x 1½	510	1,565	1,565	1,565	440	1,345	1,345	1,345	
2 5/16	LSSR2.37Z	18	2⅜	8 15/16	4⅛	(14) 0.148 x 2½	(12) 0.148 x 1½	510	1,565	1,565	1,565	440	1,345	1,345	1,345	
2½	LSSR2.56Z	18	2 9/16	8 15/16	4⅛	(14) 0.148 x 2½	(12) 0.148 x 1½	510	1,565	1,565	1,565	440	1,345	1,345	1,345	
3	LSSR210-2Z	16	3⅛	8 15/16	5⅛	(22) 0.162 x 2½	(18) 0.162 x 2½	695	2,365	2,365	2,365	600	2,035	2,035	2,035	
3½	LSSR410Z	16	3⅝	8 15/16	5⅛	(22) 0.162 x 2½	(18) 0.162 x 2½	695	2,365	2,365	2,365	600	2,035	2,035	2,035	
Dbl 2	LSU4.12	14	4⅛	9	2¼	(24) 0.162 x 3½	(16) 0.148 x 1½	1,150	3,215	3,700	4,020	990	2,785	3,200	3,480	—
Dbl 2 1/16	LSU4.28	14	4¼	9	2⅜	(24) 0.162 x 3½	(16) 0.148 x 1½	1,150	3,215	3,700	4,020	990	2,785	3,200	3,480	
Dbl 2 5/16	LSU3510-2	14	4¾	8⅞	3⅝	(24) 0.162 x 3½	(16) 0.148 x 1½	1,150	3,215	3,700	4,020	990	2,785	3,200	3,480	
Dbl 2½	LSU5.12	14	5⅛	9	2¼	(24) 0.162 x 3½	(16) 0.148 x 1½	885	3,215	3,700	3,785	760	2,785	3,200	3,280	
Skewed Hangers or Sloped and Skewed Hangers																
1¾	LSSR1.81Z	18	1 13/16	8 15/16	4⅛	(13) 0.148 x 2½	(9) 0.148 x 1½	510	1,205	1,205	1,205	440	1035	1,035	1,035	IBC, FL, LA
2 to 2 1/16	LSSR2.1Z	18	2⅛	8 15/16	4⅛	(13) 0.148 x 2½	(9) 0.148 x 1½	510	1,205	1,205	1,205	440	1035	1,035	1,035	
2 5/16	LSSR2.37Z	18	2⅜	8 15/16	4⅛	(13) 0.148 x 2½	(9) 0.148 x 1½	510	1,205	1,205	1,205	440	1035	1,035	1,035	
2½	LSSR2.56Z	18	2 9/16	8 15/16	4⅛	(13) 0.148 x 2½	(9) 0.148 x 1½	510	1,205	1,205	1,205	440	1035	1,035	1,035	
3	LSSR210-2Z	16	3⅛	8 15/16	5⅛	(20) 0.162 x 2½	(13) 0.162 x 2½	695	1,810	1,810	1,810	600	1,555	1,555	1,555	
3½	LSSR410Z	16	3 9/16	8 15/16	5⅛	(20) 0.162 x 2½	(13) 0.162 x 2½	695	1,810	1,810	1,810	600	1,555	1,555	1,555	
Dbl 2	LSU4.12[4]	14	4⅛	9	2¼	(24) 0.162 x 3½	(16) 0.148 x 1½	1,150	2,300	2,300	2,300	990	1,990	1,990	1,990	—
Dbl 2 1/16	LSU4.28[4]	14	4¼	9	2⅜	(24) 0.162 x 3½	(16) 0.148 x 1½	1,150	2,300	2,300	2,300	990	1,990	1,990	1,990	
Dbl 2 5/16	LSU3510-2[4]	14	4¾	8⅞	3⅝	(24) 0.162 x 3½	(16) 0.148 x 1½	1,150	2,300	2,300	2,300	990	1,990	1,990	1,990	
Dbl 2½	LSU5.12[4]	14	5⅛	9	2¼	(24) 0.162 x 3½	(16) 0.148 x 1½	885	1,790	1,790	1,790	760	1,550	1,550	1,550	

1. Uplift loads have been increased for earthquake or wind loading with no further increase allowed. Reduce where other loads govern.
2. For slope-only installations, the four triangle holes may be filled for an allowable roof download of 3,015 lb. for DF/SP and 2,595 lb. for SPF/HF for LSSR 16GA.
3. Roof loads are 125% of floor loads unless limited by other criteria. Floor loads may be adjusted for load durations according to the code provided they do not exceed those in the roof column.
4. LSU3510-2, LSU4.12, LSU4.28, and LSU5.12 skew options must be factory-ordered.
5. Minimum 11" joist height for LSU3510-2, LSU4.12, LSU5.12; 9½" for all others.
6. On the acute side of the skewed LSSR hanger, fill obround holes only.
7. **Fasteners:** Nail dimensions are listed diameter by length. See pp. 21–22 for fastener information.

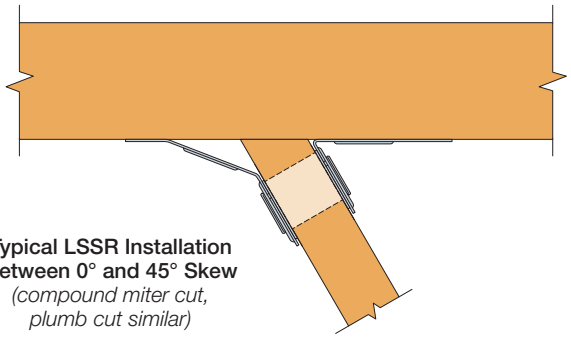

Typical LSSR Installation Between 0° and 45° Skew
(compound miter cut, plumb cut similar)

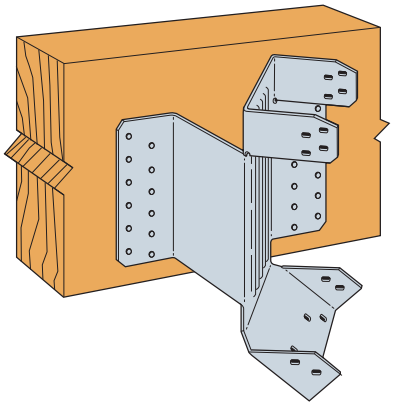

The LSU5.12 must be factory-skewed 0° to 45°. It may be field-sloped to 45°.
(LSU4.12, LSU4.28 and LSU3510-2 similar)
Hanger shown skewed right.

C-C-2021 ©2021 SIMPSON STRONG-TIE COMPANY INC.

HRC/HHRC

Hip-Ridge Connectors

The HRC series are field slopeable connectors that attach hip roof beams to the end of a ridge beam. The HRC may be sloped downward a maximum of 45° (included with part).

HHRC accommodates higher loads and uses Strong-Drive® SD Connector screws.

Material: HRC1.81 — 16 gauge; HHRC — 12 gauge

Finish: Galvanized

Installation:

- Use all specified fasteners (included with HHRC); see General Notes.
- On end of ridge — use optional diamond holes on HRC1.81 to secure the HRC. Bend face flanges on HRC1.81 back flush with ridge, and complete nailing.
- HRC1.81 on face of ridge — adjust to correct height and install nails.
- Double bevel-cut hip members to achieve full bearing loads with HRC.
- The HRC may be sloped to 45° with no reduction in loads.

Codes: See p. 11 for Code Reference Key Chart

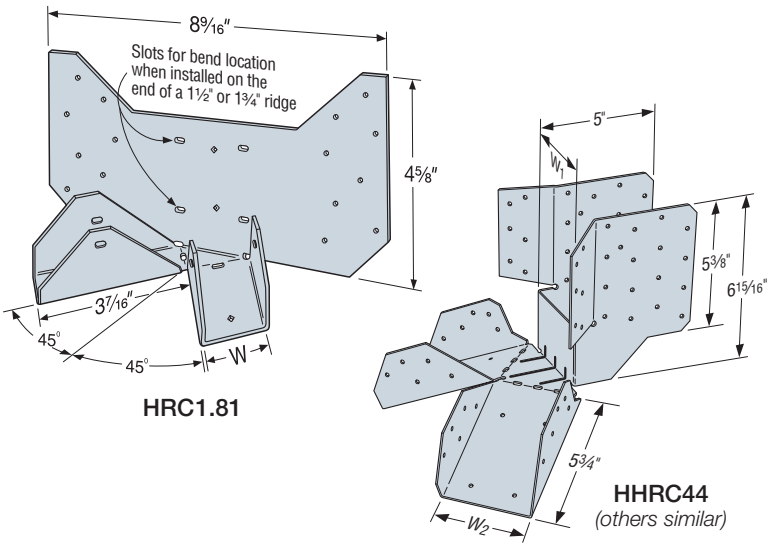

HRC Allowable Loads

Model No.	W (in.)	Member Size		Fasteners (in.)		DF/SP Allowable Loads				SPF/HF Allowable Loads				Code Ref.
		Hip	Ridge	Carrying Member	Each Hip	Uplift (160)	Floor (100)	Snow (115)	Roof (125)	Uplift (160)	Floor (100)	Snow (115)	Roof (125)	
HRC1.81	1 13/16	1¾"	2x or 1¾" wide	(16) 0.148 x 1½	(2) 0.148 x 1½	370	975	1,105	1,185	320	840	950	1,020	IBC, FL, LA

1. Allowable loads shown are for each hip. Total load carried by the connector is double this number.
2. Uplift loads have been increased for earthquake or wind loading with no further increase allowed. Reduce where other loads govern.
3. Roof loads are 125% of floor loads unless limited by other criteria. Floor loads may be adjusted for load durations according to the code provided they do not exceed those in the roof column.
4. **Fasteners:** Nail dimensions are listed diameter by length. See pp. 21–22 for fastener information.

HHRC Allowable Loads

Model No.	Member Type	Connection Members		Connector Width (in.)		Fasteners[3]		Allowable Loads Per Hip (lb.)				Code Ref.
								DF/SP		SPF/HF		
		Ridge	Hip	Ridge (W_1)	Hip (W_2)	Ridge	Each Hip	Uplift (160)	Download (100/115/125)	Uplift (160)	Download (100/115/125)	
HHRC4/1.81	SCL / Sawn lumber	4x	1¾	3⅝	1 13/16	(40) #10 x 2½" SD	(22) #10 x 1½" SD	1,490	3,110	1,385	2,315	IBC, FL, LA
HHRC44	SCL / Sawn lumber	4x	4x	3⅝	3⅝	(40) #10 x 2½" SD	(22) #10 x 2½" SD	1,970	3,110	1,635	2,315	
HHRC5.25/3.25	SCL / Glulam	5⅛	3⅛	5¼	3¼	(40) #10 x 2½" SD	(22) #10 x 2½" SD	1,970	3,110	1,635	2,315	
HHRC5.37/3.12	SCL / Sawn lumber	5¼	2-2x	5¼	3¼	(40) #10 x 2½" SD	(22) #10 x 2½" SD	1,970	3,110	1,635	2,315	
HHRC5.37/3.56	SCL / Sawn lumber / Glulam	5¼	3½	5⅜	3⅝	(40) #10 x 2½" SD	(22) #10 x 2½" SD	1,970	3,110	1,635	2,315	

1. Allowable loads shown are for each hip. Total load carried by the connector is double this number.
2. Uplift loads have been increased for earthquake or wind loading with no further increase allowed. Reduce where other loads govern.
3. See p. 121 for solid sawn sizes.
4. **Fasteners:** SD screws are Simpson Strong-Tie® Strong-Drive® SD Connector screws. See pp. 21–22 for fastener information.

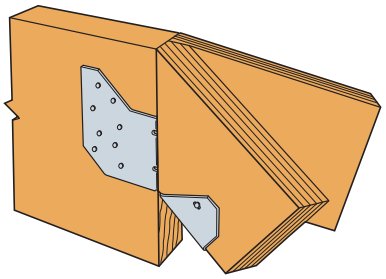

Typical HRC Installation on the End of a Ridge

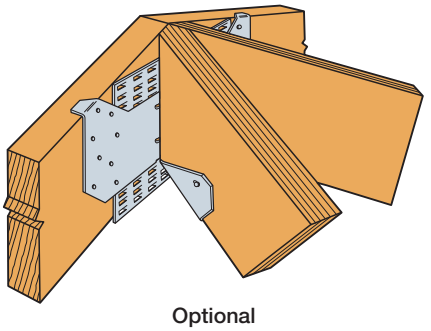

Optional HRC1.81 Installation

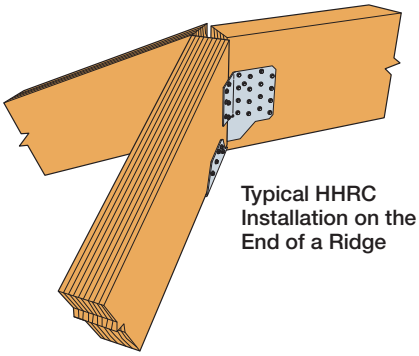

Typical HHRC Installation on the End of a Ridge

C-C-2021 ©2021 SIMPSON STRONG-TIE COMPANY INC.

VPA

Variable-Pitch Connector

The VPA may be sloped in the field, offering a versatile solution for attaching rafters to the top plate. It will adjust to accommodate slopes between 3:12 and 12:12, making it a complement to the versatile LSSR. This connector eliminates the need for notched rafters, beveled top plates and toenailing.

Material: 18 gauge

Finish: Galvanized

Installation:

- Use all specified fasteners; see General Notes

Codes: See p. 11 for Code Reference Key Chart

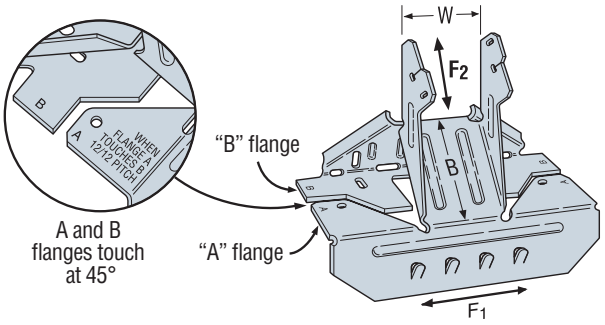

VPA25

Actual Joist Width (in.)	Model No.	W (in.)	B (in.)	Fasteners (in.)		Allowable Loads								Code Ref.
						Uplift		Download		Lateral				
						DF/SP Species	SPF Species			DF/SP Species		SPF/HF Species		
										(160)		(160)		
				Carrying Member	Carried Member	(160)	(160)	DF/SP	SPF	F_1	F_2	F_1	F_2	
1½	VPA2	1 9/16	2	(8) 0.148 x 3	(2) 0.148 x 1½	255	220	1,105	950	345	300	295	260	IBC, FL, LA
1¾	VPA25	1 13/16	2	(8) 0.148 x 3	(2) 0.148 x 1½	255	220	1,105	950	345	300	295	260	
2	VPA2.06	2 1/16	2	(9) 0.148 x 3	(2) 0.148 x 1½	255	220	1,245	1,070	345	300	295	260	—
2 1/16	VPA2.1	2⅛	2	(9) 0.148 x 3	(2) 0.148 x 1½	255	220	1,245	1,070	345	300	295	260	
2¼ – 2 5/16	VPA35	2 5/16	2	(9) 0.148 x 3	(2) 0.148 x 1½	255	220	1,245	1,070	345	300	295	260	IBC, FL, LA
2½ – 2 9/16	VPA3	2 9/16	2	(9) 0.148 x 3	(2) 0.148 x 1½	255	220	1,245	1,070	345	300	295	260	
3½	VPA4	3 9/16	2	(11) 0.148 x 3	(2) 0.148 x 1½	255	220	1,245	1,070	345	300	295	260	

1. Uplift loads have been increased for earthquake or wind loading with no further increase allowed. Reduce where other loads govern.
2. Loads may not be increased for duration of load.
3. **Fasteners:** Nail dimensions are listed diameter by length. See pp. 21–22 for fastener information.

VPA Installation Sequence

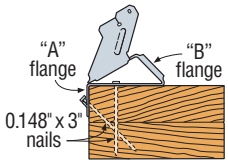

Step 1
Install top nails and face PAN nails in "A" flange to outside wall top plate.

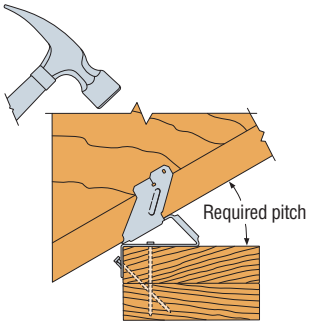

Step 2
Seat rafter with a hammer, adjusting "B" flange to the required pitch.

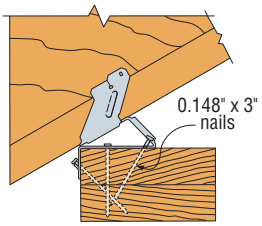

Step 3
Install "B" flange nails in the obround nail holes, locking the pitch.

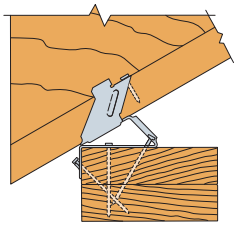

Step 4
Bend tab with hammer and install 0.148" x 1½" nail into tab nail hole. Hammer nail in at an approximate 45° angle to limit splitting.

C-C-2021 ©2021 SIMPSON STRONG-TIE COMPANY INC.

HCP

Hip Corner Plate

For complementary ridge connection, see pp. 156-157.

The HCP connects a rafter or joist to double top plates at a 45° angle.

Material: 18 gauge

Finish: Galvanized

Installation:

- Use all specified fasteners; see General Notes.
- Attach HCP to double top plates.
- Birdsmouth not required for table uplift loads but may be required for download.
- Install rafter and complete nailing. Rafter may be sloped to 45°.

Codes: See p. 11 for Code Reference Key Chart

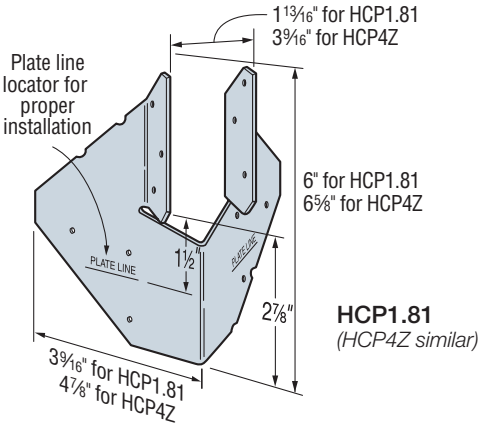

HCP1.81
(HCP4Z similar)

These products are available with additional corrosion protection. For more information, see p. 14.

Member Size (in.)	Model No.	Fasteners		DF/SP Allowable Loads		SPF/HF Allowable Loads		Code Ref.
		To Rafters	To Plates	(160)		(160)		
				Uplift	F_1	Uplift	F_1	
1¾	HCP1.81	(6) 0.148 x 1½	(6) 0.148 x 1½	590	255	510	220	IBC, FL, LA
3½	HCP4Z	(8) 0.148 x 3	(8) 0.148 x 3	990	230	850	200	

1. Loads have been increased for wind or earthquake loading, with no further increase allowed. Reduce where other loads govern.
2. The HCP can be installed on the inside and the outside of the wall with a flat bottom chord truss and achieve twice the load capacity.
3. **Fasteners:** Nail dimensions are listed diameter by length. See pp. 21–22 for fastener information.

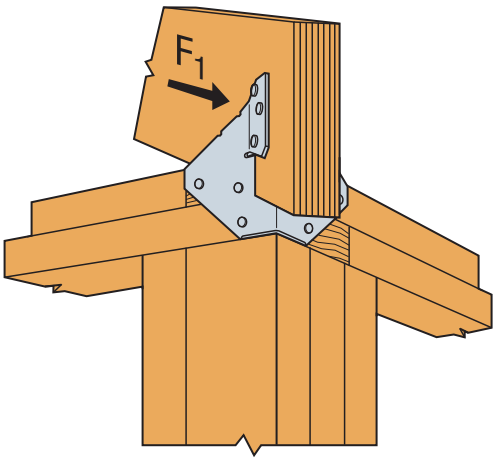

Typical HCP Installation

C-C-2021 ©2021 SIMPSON STRONG-TIE COMPANY INC.

ITS/MIT/HIT

Engineered Wood Product Top-Flange Hangers

This product is preferable to similar connectors because of (a) easier installation, (b) higher loads, (c) lower installed cost, or a combination of these features.

Simpson Strong-Tie offers a dedicated range of top-flange I-joist hangers that meet the unique needs of I-joists while offering superior performance and ease of installation.

ITS

The innovative ITS sets the standard for engineered wood top-flange hangers. The ITS installs faster and uses fewer nails than any other EWP top-flange hanger. The Strong-Grip™ seat and Funnel Flange™ features allow standard joist installation without requiring joist nails, resulting in the lowest installed cost. The Strong-Grip seat firmly secures I-joists with flange thicknesses from 1⅛" to 1½".

MIT/HIT — Positive-Angle Nailing (PAN)

PAN is specifically designed for I-joists when used with the MIT or HIT. With PAN, the nail hole material is not removed, but is formed to channel and confine the path of the nail at approximately 45°. PAN minimizes splitting of the flanges while permitting time-saving nailing from a better angle. See top flange tables on pp. 175–184.

Refer to joist manufacturer's literature or appropriate Simpson Strong-Tie Connector Selection Guide for actual joist sizes.

Material: ITS — 18 gauge; MIT, HIT — 16 gauge

Finish: Galvanized

Installation:

- Use all specified fasteners. Verify that the header can take the required fasteners specified in the table.
- See pp. 95–96 for more installation information.
- ITS — no joist nailing required for standard I-joist installation without web stiffeners. When supporting I-joists with web stiffeners or rectangular SCL member (2) 0.148" x 1½" nails must be installed into optional triangle joist nail holes for standard installation values.
- ITS — optional triangle nail holes may be used for additional load. See allowable load tables.
- MIT — optional triangle nail holes may be used for increased uplift capacity. See Optional Nailing For Increased Uplift table.
- HIT — closed PAN nail holes may be used for increased uplift capacity. See Optional Nailing For Increased Uplift table.
- For sloped joists up to ¼:12 there is no reduction, between ¼:12 and up to ½:12, tests show a 10% reduction in ultimate hanger strength. Local crushing of the bottom flange or excessive deflection may be limiting; check with joist manufacturer for specific limitations on bearing of this type.

Allowable Loads:

- The ITS, MIT and HIT hangers have locations for optional nails if additional uplift is needed. Optional uplift nailing requires the addition of properly-secured web stiffeners. See the load tables for minimum required fasteners and allowable uplift loads.
- For attaching to multi-ply headers, refer to technical bulletin T-C-MPLYHEADR at **strongtie.com**.

Options:

- Because these hangers are fully die-formed, they cannot be modified. However these models will normally accommodate a skew of up to 5°.

Codes: See p. 11 for Code Reference Key Chart

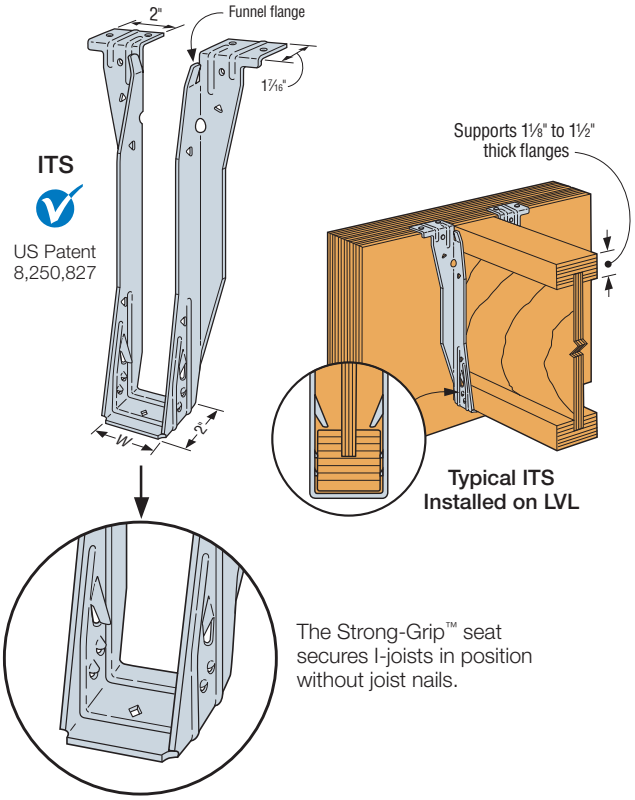

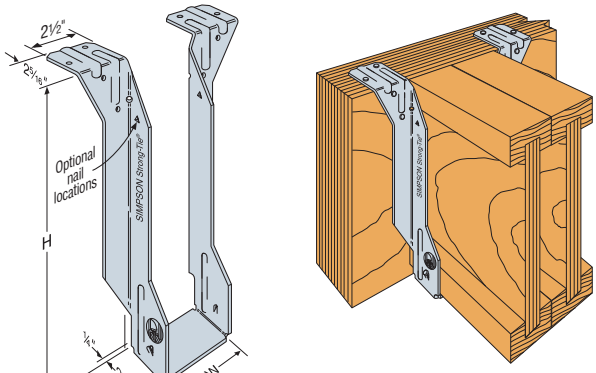

MIT

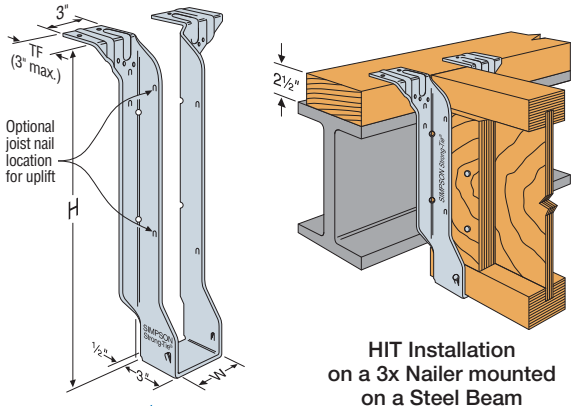

HIT

C-C-2021 ©2021 SIMPSON STRONG-TIE COMPANY INC.

Engineered Wood Product Top-Flange Hangers (cont.)

ITS Installation Sequence

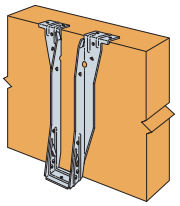

Step 1
Attach the ITS to the header.

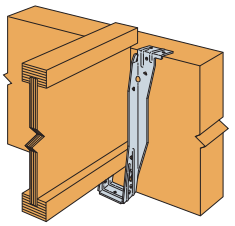

Step 2
Slide the I-joist downward into the ITS until it rests above the Strong-Grip™ seat.

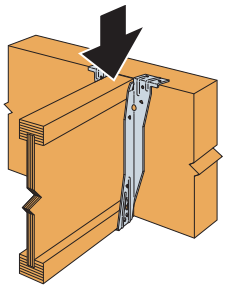

Step 3
Firmly push or snap I-joist fully into the seat of the ITS.

Positive-Angle Nailing

Correct Nailing
Approx. 45° angle

ITS Series with Various Header Applications

Model	Fasteners (in.)			Allowable Loads Header Type								Code Ref.
	Top	Face	Joist	Uplift (160)	LVL	PSL	LSL	DF/SP	SPF/HF	DF/SCL I-Joist	SPF/HF I-Joist	
ITS Series (Standard Installation)	(4) 0.148 x 1½	(2) 0.148 x 1½	—	120	1,395	1,245	1,625	1,455	1,140	1,085	940	—
	(4) 0.148 x 3	(2) 0.148 x 3	—	120	1,550	1,365	1,780	1,470	1,150	—	—	IBC, FL, LA
	(4) 0.162 x 3½	(2) 0.162 x 3½	—	120	1,785	1,735	1,905	1,565	1,225	—	—	—
ITS Series (Alternate Installation)	(4) 0.148 x 3	(4) 0.148 x 3	—	120	1,735	1,595	1,885	1,955	1,230	—	—	
	(4) 0.162 x 3½	(4) 0.162 x 3½	—	120	1,785	1,735	1,905	1,955	1,490	—	—	
	(4) 0.148 x 3	(4) 0.148 x 3	(4) 0.148 x 1½	630	1,735	1,595	1,885	1,955	1,230	—	—	
	(4) 0.162 x 3½	(4) 0.162 x 3½	(4) 0.148 x 1½	630	1,785	1,735	1,905	1,955	1,490	—	—	
MIT Series	(4) 0.148 x 1½	(4) 0.148 x 1½	(2) 0.148 x 1½	215	2,035	1,500	1,605	2,275	1,115	1,230	885	IBC, FL, LA
	(4) 0.148 x 3	(4) 0.148 x 3	(2) 0.148 x 1½	215	2,335	2,000	1,605	2,570	1,665	—	—	
	(4) 0.162 x 3½	(4) 0.162 x 3½	(2) 0.148 x 1½	215	2,550	2,140	2,115	2,575	1,665	—	—	
HIT Series	(4) 0.162 x 3½	(6) 0.162 x 3½	(2) 0.148 x 1½	315	2,550	2,220	2,500	2,875	2,000	—	—	

1. Loads may not be increased for duration of load.
2. Uplift loads have been increased for earthquake or wind loading with no further increase allowed. Reduce where other loads govern.
3. Uplift loads are based on DF/SP lumber. For SPF/HF, use 0.86 x DF/SP uplift load.
4. ITS uplift loads are valid for all lumber species and need not be reduced for duration of load.
5. LVL headers are assumed to be made primarily from Douglas fir or southern pine. For LVL made from spruce-pine-fir or similar less-dense veneers, use the values found in the SPF/HF column.
6. DF I-joists headers include flanges made from solid sawn Douglas fir, LVL made primarily of DF/SP, or LSL. For header flanges with thicknesses from 1 5⁄16" to 1 3⁄8", use 0.85 of the I-joist header load. For header flanges with thicknesses from 1 1⁄8" to 1 1⁄4", use 0.75 of the I-joist header load.
7. SCL (structural composite lumber) is LVL, LSL, and Parallam® PSL.
8. Web stiffeners required for the ITS Alternate Installation when installing optional joist nails for additional uplift load.
9. Code values are based on DF/SP header species.
10. I-joists with flanges less than 1 5⁄16" thick used in combination with hangers thinner than 14 gauge may deflect an additional 1⁄32" beyond the standard 1⁄8" limit.
11. For 2 1⁄4"-wide joists, see tables on p. 176 for allowable loads.

Optional Nailing for Increased Uplift

Model	Fasteners (in.)			Allowable Uplift Loads
	Top	Face	Joist	(160)
ITS	(4) 0.148 x 1½	(4) 0.148 x 1½	(4) 0.148 x 1½	630
	(4) 0.148 x 3	(4) 0.148 x 3	(4) 0.148 x 1½	630
	(4) 0.162 x 3½	(4) 0.162 x 3½	(4) 0.148 x 1½	630
MIT	(4) 0.148 x 1½	(4) 0.148 x 1½	(4) 0.148 x 1½	575
	(4) 0.162 x 3½	(4) 0.162 x 3½	(4) 0.148 x 1½	575
HIT	(4) 0.162 x 3½	(6) 0.162 x 3½	(4) 0.148 x 1½	575
	(4) 0.162 x 2½	(6) 0.162 x 2½	(4) 0.148 x 1½	575
	(4) 0.162 x 3½	(6) 0.162 x 3½	(6) 0.148 x 1½	850

1. Uplift loads have been increased for earthquake or wind loading with no further increase allowed. Reduce where other loads govern.
2. Uplift loads are based on DF/SP lumber. For SPF/HF, use 0.86 x DF/SP uplift load.
3. Web stiffeners are required on I-joist for additional nailing.

C-C-2021 ©2021 SIMPSON STRONG-TIE COMPANY INC.

Engineered Wood Product Top-Flange Hangers (cont.)

Nailer Table

This table indicates various allowable loads for ITS/MIT/HIT hangers used on wood nailers. The header nail type must be substituted for those listed in other tables. See technical bulletin T-C-NAILUPLFT at **strongtie.com** for other uplift values and options.

Model	Nailer	Fasteners (in.)		DF/SP Allowable Loads		SPF/HF Allowable Loads	
		Header	Joist	Uplift (160)	Download (100)	Uplift (160)	Download (100)
ITS Series	2x	(6) 0.148 x 1½	—	120	1,260	105	1,260
	2x	(6) 0.148 x 1½	(2) 0.148 x 1½	355	1,260	190	1,260
	(2) 2x	(6) 0.148 x 3	—	120	1,220	105	1,220
	(2) 2x	(8) 0.148 x 3	(4) 0.148 x 1½	630	1,745	630	1,530
	3x	(6) 0.162 x 2½	—	120	1,500	—	—
	3x	(8) 0.162 x 2½	(4) 0.148 x 1½	630	1,540	—	—
	4x	(6) 0.162 x 3½	—	120	1,525	—	—
	4x	(8) 0.162 x 3½	(4) 0.148 x 1½	630	1,905	—	—
	Steel	(4) 0.157 x ⅝ PAT[3]	(4) 0.148 x 1½	—	1,400	—	1,400
MIT Series	2x	(6) 0.148 x 1½	(2) 0.148 x 1½	215	1,475	190	1,440
	(2) 2x	(8) 0.148 x 3	(2) 0.148 x 1½	215	1,630	215	1,255
	3x	(8) 0.162 x 2½	(2) 0.148 x 1½	215	1,975	—	—
	4x	(8) 0.162 x 3½	(2) 0.148 x 1½	215	2,250	—	—
	Steel	(4) 0.157 x ⅝ PAT[3]	(2) 0.148 x 1½	—	2,045	—	2,045
HIT Series	(2) 2x	(10) 0.148 x 3	(2) 0.148 x 1½	305	2,595	315	1,950
	3x	(10) 0.162 x 2½	(2) 0.148 x 1½	305	2,835	—	—
	4x	(10) 0.162 x 3½	(2) 0.148 x 1½	305	2,875	—	—

1. Uplift loads have been increased for earthquake or wind loading with no further increase allowed. Reduce where other loads govern. See technical bulletin T-C-NAILUPLFT at **strongtie.com** for additional information.
2. Steel nailer allowable loads apply to steel header material with thickness between ¼" and ¾" with minimum F_y = 36 ksi. Design of steel header by designer.
3. 0.157"-diameter x ⅝"-long powder-actuated fastener = PDPAT-62KP. A red (level 5) or purple (level 6) load may be required to achieve specified penetration.

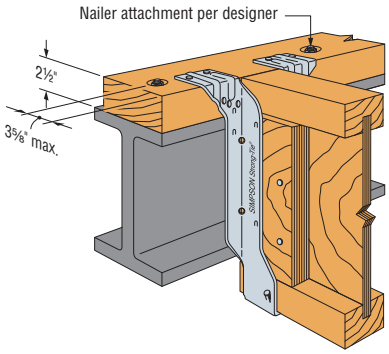

HIT Installation on a 3x Nailer mounted on a Steel Beam
(ITS, MIT similar)

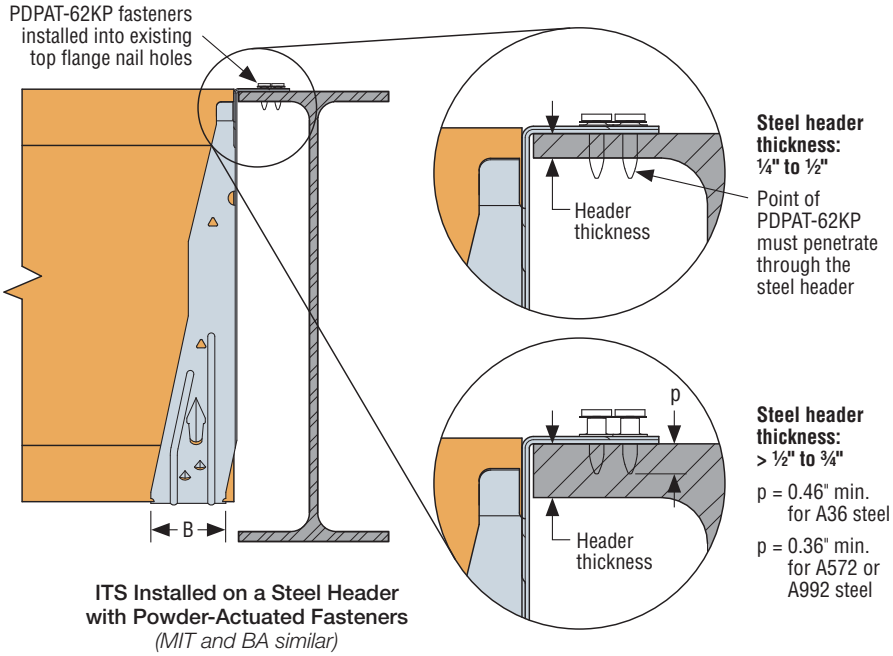

ITS Installed on a Steel Header with Powder-Actuated Fasteners
(MIT and BA similar)

PDPAT

C-C-2021 ©2021 SIMPSON STRONG-TIE COMPANY INC.

BA/HB

Top-Flange Hangers

This product is preferable to similar connectors because of (a) easier installation, (b) higher loads, (c) lower installed cost, or a combination of these features.

The BA hanger is a cost-effective hanger used for structural composite lumber and high-capacity I-joists. When used with I-joists, the positive angle nailing at the joist seat allows the hanger to be used without web stiffeners.

The HB hanger is also available with higher capacity for structural composite lumber and heavier I-joist applications.

See top flange tables on pp. 175–184.

Material: See tables on pp. 175–184.

- For modified hangers, gauge may increase from that specified for non-modified hangers. Hanger configurations, height and fastener quantity may increase from the tables depending on joist size, skew and slope.

Finish: BA and HB — Galvanized; BA and HB may be ordered hot-dip galvanized; specify HDG.

Installation:

- Use all specified fasteners; see General Notes and nailer table.
- BA and HB may be used for weld-on applications. The minimum size weld is a 2"-long fillet weld to each side of each top flange; weld size to match hanger material thickness. Distribute the weld equally on both top flanges. Welding cancels the top and face nailing requirements. Consult the code for special considerations when welding galvanized steel. The area should be well-ventilated, see p. 18, note k for weld information. Weld on applications produce the maximum allowable down load listed. For additional load information, refer to technical bulletin T-C-WELDUPLFT at **strongtie.com**.
- HB hanger requires the use of web stiffeners. BA min. nailing does not require web stiffeners. BA max. nailing requires the use of web stiffeners.
- Ledgers must be evaluated for each application separately. Check TF dimension, nail length and nail location on ledger.
- Refer to technical bulletin T-C-SLOPEJST at **strongtie.com** for information regarding load reductions on selected hangers which can be used without modification to support joists which have shallow slopes (≤ ¾:12).
- Bevel cut the carried member for skewed applications.

Options:

- Other widths are available; specify W dimension (the minimum W dimension is 1⁹⁄₁₆").
- The coating on special BA hangers will depend on the manufacturing process used. Check with your Simpson Strong-Tie representative for details. Hot-dip galvanized available: specify HDG.
- For modified hangers, fastener quantity may increase from the tables depending on joist size, skew and slope. All modified hangers are 12 gauge.
- The BA and HB hangers may be modified for slopes and/or skews up to 45°. The top flanges may be sloped up to 35° and may be open or closed up to 30°. See associated load reduction on p. 166.

Codes: See p. 11 for Code Reference Key Chart

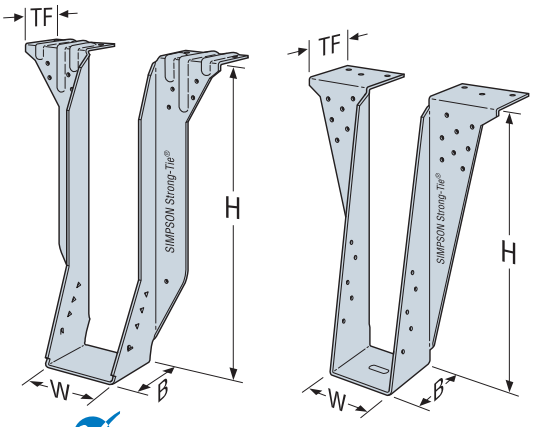

BA
US Patent 7,334,372

HB

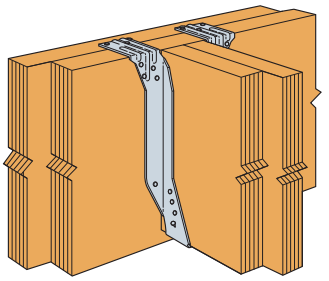

BA Supporting Double LVL

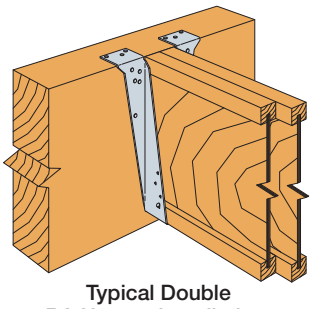

Typical Double BA Hanger Installation. BA Supporting Double I-Joist.

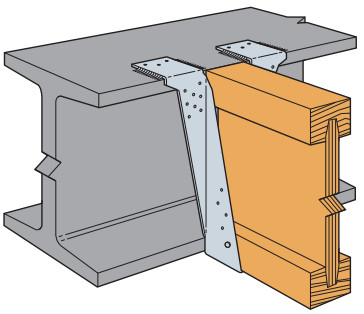

BA and HB are acceptable for weld-on applications. See Installation Information.
(HB shown)

C-C-2021 ©2021 SIMPSON STRONG-TIE COMPANY INC.

Top-Flange Hangers (cont.)

Model No.	Nailer	Fasteners (in.)		DF/SP Allowable Loads		SPF/HF Allowable Loads	
		Header	Joist	Uplift (160)	Download (100)	Uplift (160)	Download (100)
BA	2x	(10) 0.148 x 1½	(2) 0.148 x 1½	255	1,970	220	1,875
	(2) 2x	(14) 0.148 x 3	(2) 0.148 x 1½	255	2,695	220	2,235
	3x	(14) 0.162 x 2½	(2) 0.148 x 1½	255	3,230	220	2,650
	4x	(14) 0.162 x 3½	(2) 0.148 x 1½	255	3,230	—	—
	Steel	(6) 0.157 x ⅝ PAT	(2) 0.148 x 1½	—	3,695	—	3,695
HB	(2) 2x	(18) 0.148 x 3	(10) 0.148 x 1½	585	3,680	505	3,000
	3x	(18) 0.162 x 2½	(10) 0.148 x 1½	885	3,680	765	3,000
	4x	(22) 0.162 x 3½	(10) 0.148 x 1½	1,465	5,200	—	—

1. Uplift loads have been increased for earthquake or wind loading with no further increase allowed. Reduce where other loads govern. BA hangers resist more uplift when web stiffeners are used. Refer to technical bulletin T-C-NAILUPLFT at **strongtie.com** for additional information.
2. Steel nailer allowable loads apply to steel header material with thickness between ¼" and ¾" with minimum F_y = 36 ksi. Design of steel header by designer.
3. 0.157"-diameter x ⅝"-long powder-actuated fastener = PDPAT-62KP. A red (level 5) or purple (level 6) load may be required to achieve specified penetration.
4. **Fasteners:** Nail dimensions are listed diameter by length. See pp. 21–22 for fastener information.

Nailer Table

The table indicates the maximum allowable loads for BA and HB hangers used on wood nailers. Nailers are wood members attached to the top of a steel I-beam, concrete or masonry wall.

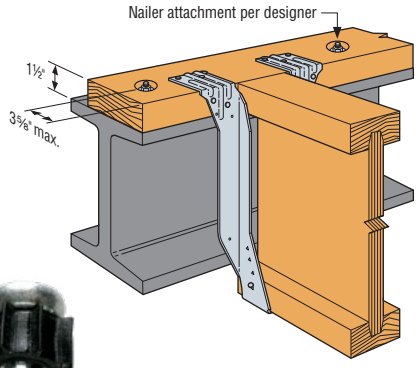

PDPAT

BA and HB are acceptable for nailer applications.
(BA shown on 2x nailer)

Various Header Applications

Model Series	W	H	Fasteners (in.)			Allowable Loads Header Type								Code Ref.
			Top	Face	Joist	Uplift (160)	LVL	PSL	LSL	DF/SP	SPF/ HF	I-Joist DF/SCL	I-Joist SPF/HF	
BA (Min.)	1⁹⁄₁₆–7½	7⅛ to <11	(6) 0.148 x 1½	(4) 0.148 x 1½	(2) 0.148 x 1½	255	2,295	2,610	2,270	1,970	1,875	1,495	1,495	IBC, FL, LA
			(6) 0.148 x 3	(10) 0.148 x 3	(2) 0.148 x 1½	255	3,230	3,630	4,005	2,980	2,980	—	—	
			(6) 0.162 x 3½	(10) 0.162 x 3½	(2) 0.148 x 1½	255	4,015	3,705	4,005	3,205	2,660	—	—	
		11 to 30	(6) 0.148 x 1½	(4) 0.148 x 1½	(2) 0.148 x 1½	255	2,295	2,610	2,270	1,970	1,875	1,495	1,495	
			(6) 0.148 x 3	(10) 0.148 x 3	(2) 0.148 x 1½	255	3,230	3,630	4,005	3,800	2,980	—	—	
			(6) 0.162 x 3½	(10) 0.162 x 3½	(2) 0.148 x 1½	255	4,015	3,705	4,005	3,780	3,095	—	—	
BA (Max.)	1⁹⁄₁₆–7½	7⅛ to 30	(6) 0.148 x 3	(10) 0.148 x 3	(8) 0.148 x 1½	1,275	3,555	3,630	4,120	3,625	3,550	—	—	
			(6) 0.162 x 3½	(10) 0.162 x 3½	(8) 0.148 x 1½	1,275	4,715	4,320	4,500	4,720	4,005	—	—	
HB	1⁹⁄₁₆–2½	8 to 33	(6) 0.162 x 3½	(16) 0.162 x 3½	(10) 0.148 x 1½	2,210	5,815	5,640	6,395	5,810	3,820	—	—	
	2⁹⁄₁₆–3½		(6) 0.162 x 3½	(16) 0.162 x 3½	(10) 0.162 x 2½	1,560	5,815	5,640	6,395	5,650	3,820	—	—	
	3⁹⁄₁₆ to 7½		(6) 0.162 x 3½	(16) 0.162 x 3½	(10) 0.162 x 3½	2,075	5,815	5,640	6,395	5,395	3,820	—	—	

1. This table assumes joists with $F_c \perp$ = 750 psi. For other joists, check that bearing and joist nails are adequate.
2. Uplift loads have been increased for earthquake or wind loading with no further increase allowed. Reduce where other loads govern.
3. Uplift loads are based on DF/SP lumber. For SPF/HF, use 0.86 x DF/SP uplift load.
4. Loads may not be increased for duration of load.
5. SCL (structural composite lumber) is LVL (laminated veneer lumber), LSL (laminated strand lumber), and Parallam® PSL.
6. LVL headers are assumed to be made primarily from Douglas fir or southern pine. For LVL made from spruce-pine-fir or similar less-dense veneers, use the values found in the SPF/HF column.
7. DF I-joists headers include flanges made from solid sawn Douglas fir, LVL made primarily of DF/SP, or LSL. For I-joist header flanges with thicknesses from 1⁵⁄₁₆" to 1⅜", use 0.85 of the I-joist header load. For I-joist header flanges with thicknesses from 1⅛" to 1¼", use 0.75 of the I-joist header load.
8. **Fasteners:** Nail dimensions are listed diameter by length. See pp. 21–22 for fastener information.

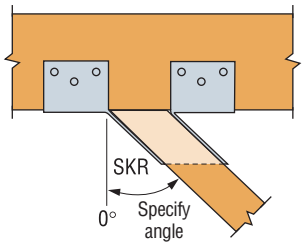

Top View BA Hanger Skewed Right

C-C-2021 ©2021 SIMPSON STRONG-TIE COMPANY INC.

Top-Flange Hangers (cont.)

Modifications and Associated Load Reductions[1]

Hanger	Condition	Seat							Top Flange	
		Sloped Down 45° Max.	Sloped Up 45° Max.	Skewed 45° Max.	Sloped Down and Skewed		Sloped Up and Skewed		Top Flange Sloped 35° Max.	Top Flange Bent Open or Closed 30° Max.
BA	Min. height →	7¼	7¼	7¼	9¼	14	9¼	14	14[4]	9¼
	W < 2½"	0.82	0.66	0.95	0.54	0.82	0.64	0.64	(90 – a) / 90	(90 – a) / 90
	W ≥ 2½"	0.8	0.95	1	0.7	1	0.8	0.8	(90 – a) / 90	(90 – a) / 90
HB	Min. height →	8	8	8	11¼	14	11¼	14	14	11¼
	W < 2½"	0.84	0.7	1	0.47	0.84	0.62	0.69	(90 – a) / 90	(90 – a) / 90
	W ≥ 2½"	0.87	0.7	0.96	0.59	0.87	0.7	0.7	(90 – a) / 90	(90 – a) / 90

1. Reduction factors are not cumulative. Use the lowest factors that apply.
2. Web stiffeners are required for sloped or skewed conditions.
3. For straight-line interpolation, "a" is the specified angle.
4. The sloped top flange option is permitted for BA hangers with a minimum height of 11¼" when the load reduction factor is applied to the tabulated BA allowable loads for the minimum installation.

Reduction Factor Instructions

Allowable Download = Lower of (Seat or Top Flange) × (Table Load)

Allowable Uplift = 0.90 × (Table Load) for BA with W < 2½"
= 0.71 × (Table Load) for HB with W < 2½"
= 1.00 × (Table Load) for all others

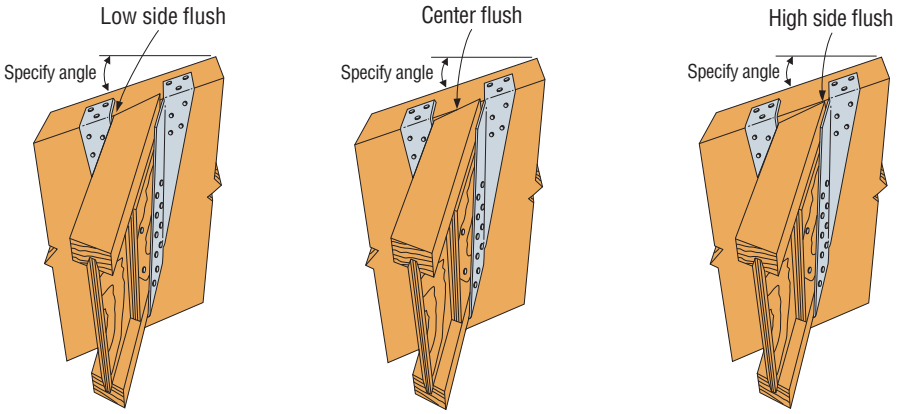

Sloped down and skewed left with sloped top flange Installation.
When ordering, specify low side flush, center flush or high side flush.

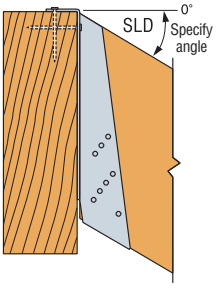

Typical Sloped Down Installation with Full Backing

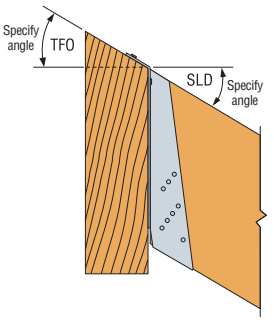

Typical Sloped Down with Top Flange Open

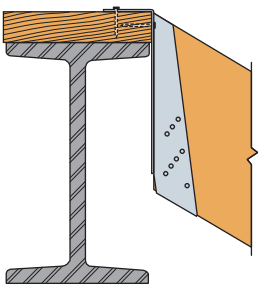

Typical Sloped Down on Nailer Non-Backed

C-C-2021 ©2021 SIMPSON STRONG-TIE COMPANY INC.

WP/HWP/HWPH/WMU

High-Capacity Top-Flange Hangers

The WP, HWP and HWPH series are designed to support joists on wood purlins or beams. WMU hangers are designed for use on standard 8"-grouted masonry block wall construction.

The HWP and HWPH high-wind purlin hangers have enhanced uplift and are ideal for high-wind applications.

Material: (Top flange/stirrup): WP — 7/12 gauge; HWP — 7/12 gauge; HWPH — 3/7 gauge

Finish: Simpson Strong-Tie gray paint. HDG available; contact Simpson Strong-Tie.

Installation:

- Use all specified fasteners.
- The WP, HWP and HWPH may be used for weld-on applications. The minimum size weld is a 1½" long fillet weld to each side of the top flange; weld size to match hanger material thickness. See p. 18 note k for weld information. Weld-on applications have the maximum allowable capacity listed. For WP, uplift loads do not apply to this application. For additional load information, refer to technical bulletin T-C-WELDUPLFT at **strongtie.com.**
- Non-modified hangers can support joists sloped up to ¼:12 using table loads. For joists sloping between ¼:12 and ¾:12 use 85% of the table loads. See technical bulletin T-C-SLOPEJST at **strongtie.com**.
- Web stiffeners are required for these hangers.
- If joist is shorter than hanger by more than ½" use only 50% of the table loads.
- For attaching to multi-ply headers, refer to technical bulletin T-C-MPLYHEADR at **strongtie.com**.

Options:

- The WP, HWP and HWPH may have a sloped and/or skewed seat up to 45°. The WP may be skewed up to 84°. See p. 169 for reduction associated with modifications.
- The top flange of the WP, HWP and HWPH may be offset and/or sloped down up to 35°. The top flange may also be opened/closed up to 30°. See p. 169 for reduction associated with modifications.
- All models are available in Type A (joist bevel cut up to 45º). See p. 169. WP is also available in Type B style (square-cut joist). Contact Simpson Strong-Tie when ordering.
- HWPH is available in a Type B configuration for skews up to 84°.
- Hangers with a skew greater than 15° may have all the joist nails on the outside angle.
- Specify the slope up or down in degrees from the horizontal plane and/or the skew right or left in degrees from the perpendicular vertical plane.
- When combining skews and slopes specify whether low side, high side, or center of joist will be flush with the top of the header (see illustration on p. 169).
- Uplift loads are not available for open/closed TF, TF sloped and offset options.

Ridge Hanger (WP only)

- Top flange may be sloped to a maximum of 35° to accommodate a ridge (see illustration). Specify angle of the slope. Reduce allowable load using straight-line interpolation. See open/closed example.

Codes: See p. 11 for Code Reference Key Chart

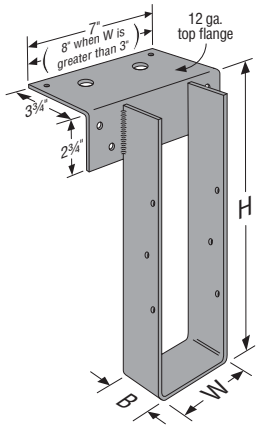

WMU

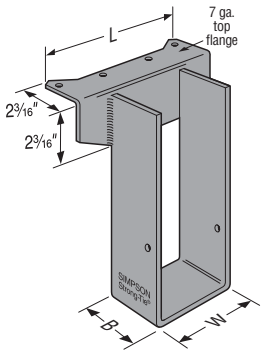

WP

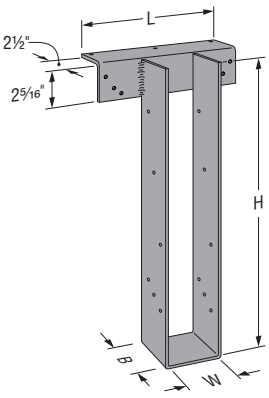

HWP

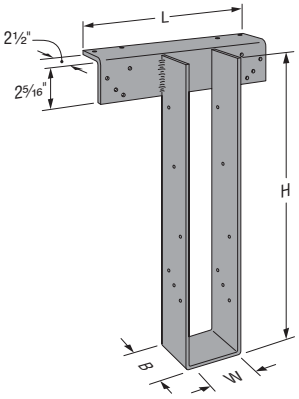

HWPH

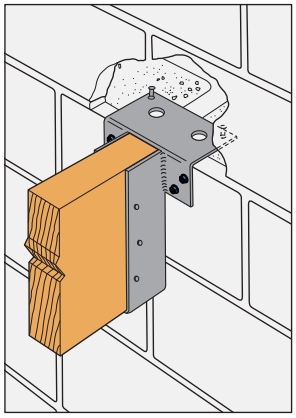

WMU Mid-Wall Installation
See pp. 240–241 for models and more information.

C-C-2021 ©2021 SIMPSON STRONG-TIE COMPANY INC.

WP/HWP/HWPH/WMU

High-Capacity Top-Flange Hangers (cont.)

Model	Stirrup Width (W) (in.)	Stirrup Seat Depth (B) (in.)	Top Flange Length (L) (in.)
WP	1 9/16 – 2 1/16	See load table	7
	2 1/8 – 3 5/8	2 1/2	7
	3 11/16 – 7 1/8	2 1/2	8
	7 3/16 – 7 1/2	2 1/2	10
HWP	1 9/16	5	10
	1 13/16	4	10
	2 3/8 – 5 3/8	3	10
	5 11/16 – 7 1/8	3	12
HWPH	1 13/16 – 2 1/2	See load table	10
	2 9/16 – 2 3/4	4	10
	3 1/4 – 3 9/16	3 1/4	10
	3 13/16 – 6 3/4	3 1/4	12
	6 13/16 – 7 1/2	3 1/4	14

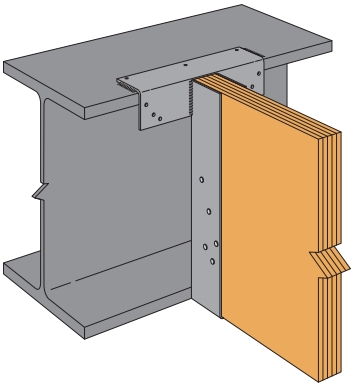

HWP Welded on Steel Flange

Model	Nailer	Top Flange Nailing (in.)	Uplift[1] (160)	Allowable Loads		
				DF/SP	SPF/HF	LSL
WP	2x	(4) 0.148 x 1 1/2	—	2,465	1,985	3,150
	(2) 2x	(4) 0.148 x 2 1/2	—	2,985	2,330	—
	3x or 4x	(4) 0.162 x 2 1/2	—	2,985	2,330	3,375
HWP	(2) 2x	(3) 0.148 x 3	710	4,415	3,860	—
	3x	(3) 0.162 x 2 1/2	970	4,415	3,860	—
	4x	(3) 0.162 x 2 1/2	1,535	4,920	3,860	—
HWPH	(2) 2x	(4) 0.162 x 2 1/2	710	5,910	4,820	—
	3x	(4) 0.162 x 2 1/2	970	5,970	5,125	—
	4x	(4) 0.162 x 3 1/2	1,550	5,970	5,125	—

1. Attachment of nailer to supporting member is the responsibility of the designer.
2. Uplift loads are based on DF/SP lumber. For SPF/HF, use 0.86 x DF/SP uplift load.

Nailer Table

The table indicates the maximum allowable loads for WP, HWP and HWPH hangers used on wood nailers. Nailers are wood members attached to the top of a steel I-beam, concrete or masonry wall.

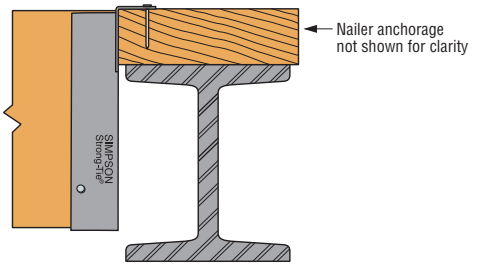

Installation on Wood Nailer

Various Header Applications

Model	Joist (in.)		Fasteners (in.)			Allowable Loads Header Type								Code Ref.
	Width	Depth	Top	Face	Joist	Uplift (160)	LVL	PSL	LSL	DF/SP	SPF/HF	I-Joist	GFCMU	
WMU	1 1/2 to 1 3/4	5 3/8 to 28	(2) 0.162 x 3 1/2 DPLX	(4) 1/4 x 1 3/4 Titen Turbo™	(6) 0.148 x 1 1/2	920	Mid-Wall Installation						4,895	—
	2 1/2 to 7 1/2	5 3/8 to 28	(2) 0.162 x 3 1/2 DPLX	(4) 1/4 x 1 3/4 Titen Turbo	(6) 0.148 x 1 1/2	920							4,895	
	1 1/2 to 7 1/2	5 3/8 to 28	(2) 1/4 x 1 3/4 Titen Turbo	(4) 1/4 x 1 3/4 Titen Turbo	(6) 0.148 x 1 1/2	650	Top-of-Wall Installation						3,545	
WP	1 1/2 to 7 1/2	5 3/8 to 30	(4) 0.148 x 1 1/2	—	(2) 0.148 x 1 1/2	—	2,935	3,150	—	2,465	1,985	2,030	—	IBC, FL, LA
	1 1/2 to 7 1/2	5 3/8 to 30	(4) 0.148 x 2 1/2	—	(2) 0.148 x 1 1/2	—	2,935	3,150	3,150	2,985	2,230	—	—	
	1 1/2 to 7 1/2	5 3/8 to 30	(4) 0.162 x 2 1/2	—	(2) 0.148 x 1 1/2	—	3,095	3,605	3,605	2,985	2,230	—	—	
HWP	1 1/2 to 7	6 to 15 5/8	(3) 0.162 x 3 1/2	(6) 0.162 x 3 1/2	(10) 0.148 x 1 1/2	1,535	3,995	4,500	4,350	3,955	3,955	—	—	
	1 1/2 to 7	15 3/4 to 28	(3) 0.162 x 3 1/2	(6) 0.162 x 3 1/2	(12) 0.148 x 1 1/2	1,560	3,995	4,500	4,350	3,955	3,955	—	—	
HWPH	2 1/2 to 7 1/2	6 to 15 5/8	(4) 0.162 x 3 1/2	(8) 0.162 x 3 1/2	(10) 0.148 x 1 1/2	1,685	6,595	7,025	5,450	5,920	4,740	—	—	
	2 1/2 to 7 1/2	15 3/4 to 32	(4) 0.162 x 3 1/2	(8) 0.162 x 3 1/2	(12) 0.148 x 1 1/2	2,075	6,595	7,025	5,450	5,920	4,740	—	—	

1. Uplift loads have been increased for earthquake or wind loading with no further increase allowed. Reduce where other loads govern.
2. Uplift loads are based on DF/SP lumber. For SPF/HF, use 0.86 x DF/SP uplift load except WMU, use 0.75 x DF/SP uplift loads.
3. LVL headers are assumed to be made primarily from Douglas fir or southern pine. For LVL made from spruce-pine-fir or similar less-dense veneers, use the values found in the SPF/HF column.
4. WP quantity of nail holes in the top flange varies.
5. Grout-filled CMU (GFCMU) shall have a minimum compressive strength of f'_m = 1,500 psi.
6. For hanger heights exceeding the joist height, the allowable load is 0.50 of the table load.
7. **Fasteners:** Nail dimensions are listed diameter by length. Titen Turbo screws are Simpson Strong-Tie concrete and masonry screws. See pp. 21–22 for fastener information.

C-C-2021 ©2021 SIMPSON STRONG-TIE COMPANY INC.

High-Capacity Top-Flange Hangers (cont.)

Modifications and Associated Load Reductions for WP/HWP/HWPH

Models	Seat							Top Flange				Top Flange and Seat				Joist Height
	Seat Sloped 45° Max.		Seat Skewed Type A	Seat Skewed Type B		Seat Sloped and Skewed Type A 1°–45°		Top Flange Sloped 35° Max.	Top Flange Bent Open or Closed 30° Max.	Top Flange Offset		Top Flange Offset and Skewed Seat Type A, Bevel Cut 1°–45°		Top Flange Offset and Skewed Seat Type B, Plumb Cut 1°–84°		Joist Shorter Than Hanger
	Slope Up	Slope Down	1°–45°	1°–45°	46°–84°	Up	Down			Narrow	Wide	Narrow	Wide	Narrow	Wide	
WP	1.0	1.0	1.0	1.0		1.0	1.0	(90–a)/90	(90–a)/90	0.5		0.5		0.25	0.3	By more than ½": 0.50 By ½" or less: 1.00
HWP		0.8		N/A			0.8			0.5	0.6	0.5	0.6	N/A		
HWPH				0.8	0.7									0.5		

1. For straight-line interpolation, "a" is the specified angle.
2. Reduction factors are not cumulative. Use the lowest factors that apply.
3. Narrow ≤ 3½", Wide > 3½".
4. HWP & HWPH options receive catalog uplift loads except: skewed type A is 75% of the table load, skewed type B is 50% of the table load, top flange offset 30% of the table load.
5. Top flange bent closed is not available for HWP or HWPH.

Reduction Factor Instructions

Allowable Download = (lowest of Seat, Top Flange, or Joist Height) × (Table Load)

Allowable Uplift = as noted in table per height.

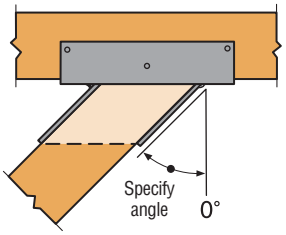

HWP Top View
Skewed Left Type A Hanger
(bevel-cut joist shown)

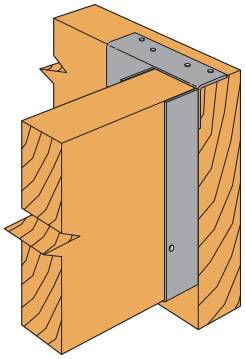

Typical WP Top Flange Offset Left

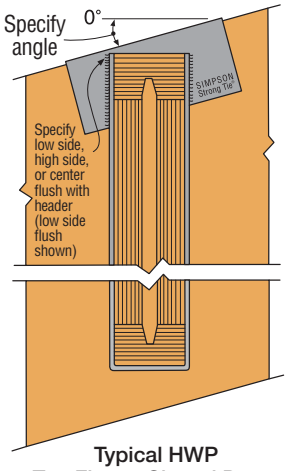

Typical HWP
Top Flange Sloped Down
Left with Low Side Flush

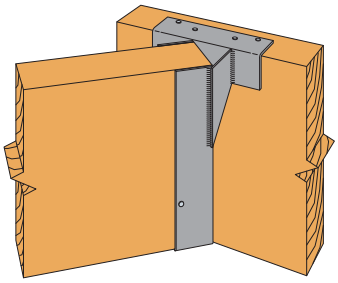

WP Skewed Left
Type B Hanger
(square-cut joist shown)

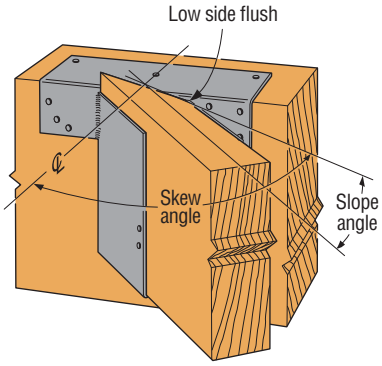

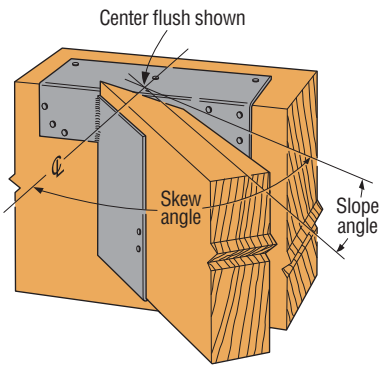

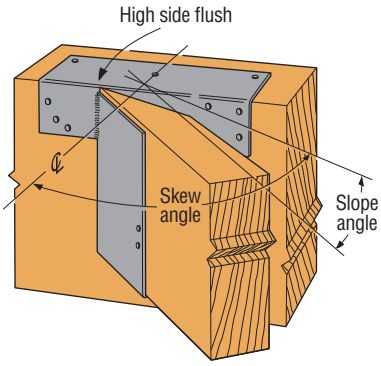

Typical HWP sloped down, skewed right with type A hanger (joist end must be bevel cut).
When ordering, specify low side flush, center flush or high side flush.

C-C-2021 ©2021 SIMPSON STRONG-TIE COMPANY INC.

HGLT/HGLTV/HGLS/GLS

Heavy-Duty Top-Flange Hangers

HGLTV hangers are designed for structural composite lumber header applications that require high loads. The top-flange nails are sized and specifically located to prevent degradation of the header due to splitting of laminations.

HGLT accommodate typical structural requirements for timber and glulam beams. Not acceptable for nailer applications. The Funnel Flange™ design allows easy installation of beams.

GLS and HGLS are heavy glulam beam saddle hangers.

For heavy loads with a face-mount application, see the HGUS and GU series.

Material: 3 ga. top flange; 7 ga. stirrup

Finish: Simpson Strong-Tie® gray paint.
Hot-dip galvanized is available; specify HDG.

Installation:

- Use all specified fasteners. Verify that the header can take the required fasteners specified in the table.
- For attaching to multi-ply headers, refer to technical bulletin T-C-MPLYHEADR at **strongtie.com**.
- Flatten edge of header to match top flange radius.
- Bevel cut the carried beam for skewed hangers.
- For hangers exceeding the joist height by more than ½", allowable load is 50% of the table load.
- This series may be used for weld-on applications. Minimum required weld is a ¼" x 2½" fillet weld at each end of the top flange; see p. 18, note k for weld information. Weld-on applications produce maximum loads listed. For uplift loads, refer to technical bulletin T-C-WELDUPLFT at **strongtie.com**.
- HGLTV hangers may be installed on ledgers provided the ledgers are made of 4x solid sawn or 3½" SCL shown in the table below. Thinner ledgers must be evaluated by the building designer.
- N54A nails are included with HGLT, HGLS and GLS hangers. N54A nails should only be used with solid sawn, timber, or glulam headers. For HGLS or GLS with SCL members, ¼" x 2½" Strong-Drive® SDS Heavy-Duty Connector screws may be used in place of N54A nails. For HGLT, consider HGLTV as an alternative when used with SCL.
- For HGLS and GLS, loads shown are per side.
- To order GLS and HGLS, specify H_1, H_2, W_1, W_2 and S dimensions (see illustration).

Options:

- Hot-dip galvanized; specify HDG.
- HGLT/HGLTV, GLS and HGLS series seats may be skewed to a maximum of 50° or sloped to a maximum of 45°.
- For sloped seat, the maximum allowable load for the HGLT/HGLS/HGLTV is 9,165 lb. The maximum allowable load for the GLS is 6,550 lb.
- For skewed seat, the maximum allowable load for the HGLT/HGLS/HGLTV is 7,980 lb. The maximum allowable load for the GLS is 6,550 lb. The deflection at full loading may reach ¼". For skews greater than 15°, multiply the table uplift load by 0.50.
- Sloped and skewed seat combinations are not available for the HGLT/HGLS/HGLTV. For GLS sloped and skewed seat combinations, the maximum download is 5,500 lb. per supported member.
- Sloped or skewed seat hangers may not be installed in non-backed header installations.
- Top flange may be sloped down to the left or right up to 30°. Reduce allowable loads using the following reduction factor based on linear interpolation $(90-\alpha)/90$; where α is the angle measure from the horizontal. This reduction is not cumulative with other load reductions.
- Top flange may be offset left or right for placement at the end of a header. Minimum seat width 3¼". The maximum allowable load is 0.45 for the HGLT/HGLS/HGLTV and 0.50 for the GLS. No uplift load is available.
- For skewed and offset or skewed only top-flange HGLS/HGLT/HGLTV hangers with inward or outward configuration, the maximum allowable load is the lesser of a) 45% of the catalog load or b) 4,300 lb. for HGLS/HGLT/HGLTV and 3,500 lb. for GLS.

Codes: See p. 11 for Code Reference Key Chart

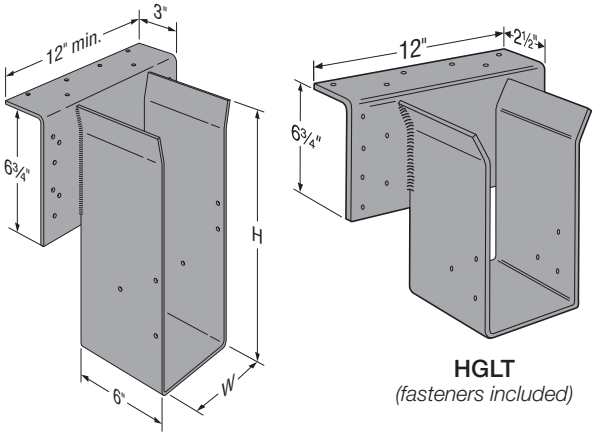

HGLTV

HGLT
(fasteners included)

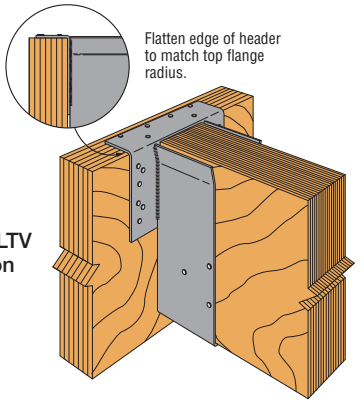

Typical HGLTV Installation

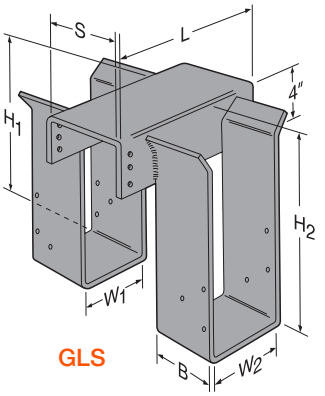

GLS

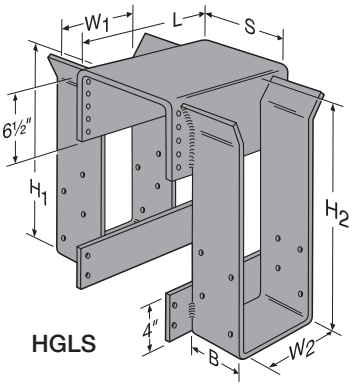

HGLS

C-C-2021 ©2021 SIMPSON STRONG-TIE COMPANY INC.

Heavy-Duty Top-Flange Hangers (cont.)

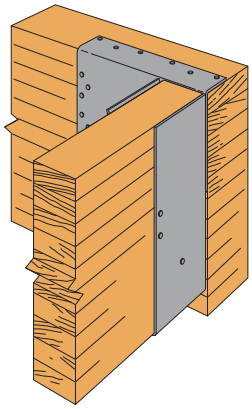

Typical HGLT
Top Flange Offset Left

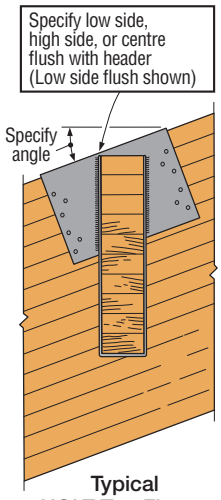

Typical
HGLT Top Flange
Sloped Down Left
with Low Side Flush

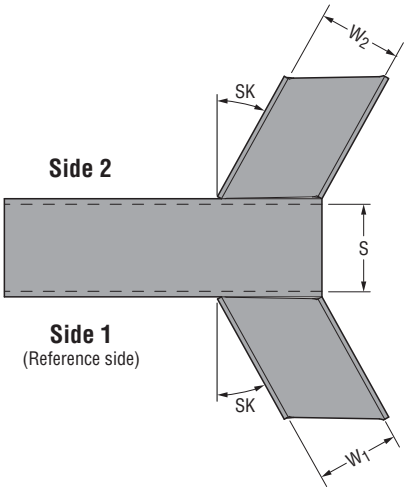

HGLS (Skewed Outward)
Skewed Right, Offset Left
(Top View)

Model No.		Hanger Dimensions (in.)			
		W_1, W_2	L		S
GLS	HGLS		GLS	HGLS	
3–5	—	3¼	9	—	5¼
3–7*	—	3¼	9	—	6⅞
5–5	5–5	5¼	9	9	5¼
5–7	5–7	5¼	9	9	6⅞
5–9	5–9	5¼	9	9	8⅞
5–11	5–11	5¼	9	9	10⅞
7–7	7–7	6⅞	12	12	6⅞
7–9	7–9	6⅞	12	12	8⅞
7–11	7–11	6⅞	12	12	10⅞
—	9–9	8⅞	—	12	8⅞
3.6–3.6–SDS	3.6–3.6–SDS	3⅝	9	9	3⅝
3.6–5.3–SDS	3.6–5.3–SDS	3⅝	9	9	5⅜
5.3–5.3–SDS*	5.3–5.3–SDS	5⅜	9	12	5⅜
5.3–7.1–SDS	5.3–7.1–SDS	5⅜	9	12	7⅛
7.1–7.1–SDS	7.1–7.1–SDS	7⅛	12	12	7⅛

*Slope, skew and offset top flange not available.

These products are available with additional corrosion protection. For more information, see p. 14.

Model No.	Joist (in.)		Fasteners (in.)			Allowable Loads Header Type						Code Ref.
	Width	Height	Top	Face	Joist	Uplift (160)	LVL	PSL	LSL	DF/SP	SPF/HF	
HGLTV series	2 11/16 – 8¾	7½ – 33	(6) 0.162 x 3½	(12) 0.162 x 3½	(6) 0.162 x 3½	1,120	10,585	9,485	9,500	7,805	6,770	IBC, FL, LA
HGLT Series	3⅛ – 8¾	7½ – 33	(6) N54A	(12) N54A	(6) N54A	2,450	—	—	—	10,720	—	
HGLS Series	5⅛ – 8¾	10½ – 33	—	(28) N54A	(16) N54A	2,265	—	—	—	13,850	—	
GLS Series	3¼ – 7⅛	8½ – 28	—	(12) N54A	(12) N54A	2,265	—	—	—	8,620	—	

1. Uplift loads have been increased for earthquake or wind loading with no further increase allowed. Reduce where other loads govern.
2. Uplift loads apply only when "H" is 28" or less.
3. For hanger heights exceeding the joist height, the allowable load is 0.50 of the table load.
4. LVL headers are assumed to be made primarily from Douglas fir or southern pine.
   For LVL made from spruce-pine-fir or similar less-dense veneers, use the values found in the SPF/HF column.
5. For SCL products made primarily from Douglas Fir or Southern Pine, use 1,640 lb. for uplift. For SPF members, use 1,115 lb. for uplift.
6. GLS and HGLS saddle hanger allowable loads are for each stirrup. Fasteners listed are total fasteners required.
7. **Fasteners:** Nail dimensions are listed diameter by length. See pp. 21–22 for fastener information.

C-C-2021 ©2021 SIMPSON STRONG-TIE COMPANY INC.

EGQ

High-Capacity Top-Flange Hanger

This product is preferable to similar connectors because of (a) easier installation, (b) higher loads, (c) lower installed cost, or a combination of these features.

The EGQ hanger is a high-capacity top-flange connector designed for use with structural composite lumber beams. It utilizes Strong-Drive® SDS Heavy-Duty Connector screws for higher capacity and ease of installation. Available in standard SCL widths and made to specified heights. SDS screws are included.

Material: Top flange — 3 gauge; stirrups — 7 gauge

Finish: Simpson Strong-Tie gray paint. HDG available; contact Simpson Strong-Tie.

Installation:

- Use all specified fasteners; see General Notes.
- Install with ¼" x 3" Strong-Drive SDS Heavy-Duty Connector screws, which are provided with the EGQ. (Lag screws will not achieve the same load.)
- All multiple members must be fastened together per the designer.
- Multiple member headers may require additional fasteners at hanger locations. Quantity and location to be determined by designer.

Options:

Skewed Seat

- The EGQ can be skewed a maximum of 45°
- The maximum allowable download when skewed is 16,300 lb.
- The maximum allowable uplift when skewed is 5,770 lb.
- Joist must be bevel cut for skewed seat installation

Sloped Seat

- The EGQ can be sloped up or down a maximum of 45°
- The maximum allowable download when sloped is 15,360 lb.
- The allowable uplift when sloped is 100% of the table load
- Sloped seat installation requires an additional 14 joist screws (supplied with the connector)

No Sloped and Skewed Combo Available

Codes: See p. 11 for Code Reference Key Chart

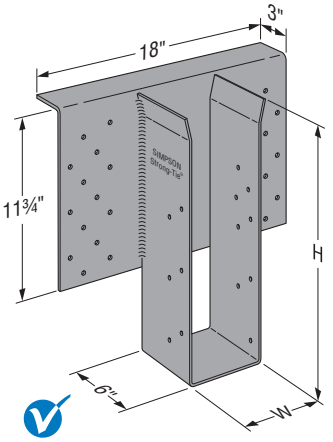

EGQ

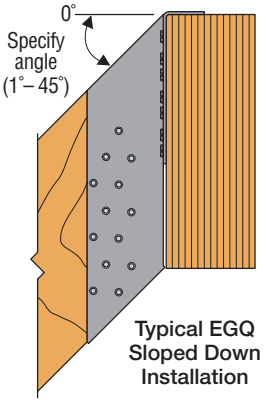

Typical EGQ Sloped Down Installation

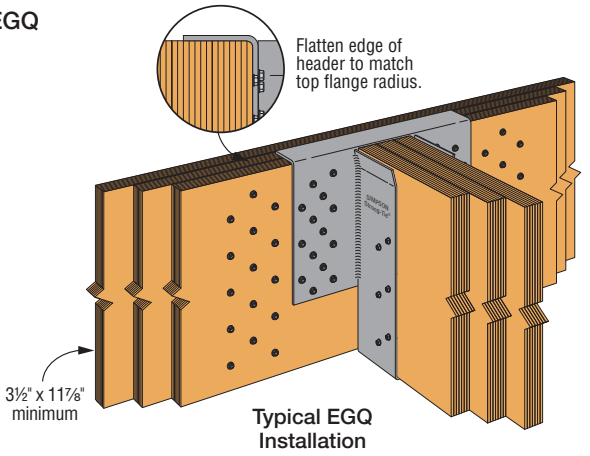

Typical EGQ Installation

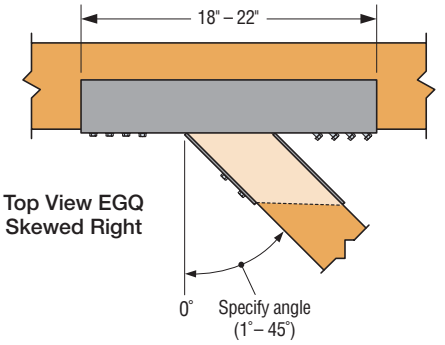

Top View EGQ Skewed Right

These products are available with additional corrosion protection. For more information, see p. 14.

Model No.	Joist or Purlin Size (in.)	Dimensions (in.)			SDS Fasteners		Allowable Loads Header Type				Code Ref.
		W	H (Min.)	H (Max.)	Header	Joist	Uplift (160)	LVL/LSL	PSL	DF/SP	
EGQ3.62-SDS3	3½	3⅝	11¼	32	(28) ¼" x 3"	(12) ¼" x 3"	7,670	19,800	18,680	17,085	IBC, FL, LA
EGQ5.25-SDS3	5⅛	5¼	11¼	32	(28) ¼" x 3"	(12) ¼" x 3"	7,670	19,800	18,680	17,085	
EGQ5.37-SDS3	5¼	5⅜	11¼	32	(28) ¼" x 3"	(12) ¼" x 3"	7,670	19,800	18,680	17,085	
EGQ5.62-SDS3	5½	5⅝	11¼	32	(28) ¼" x 3"	(12) ¼" x 3"	7,670	19,800	18,680	17,085	
EGQ6.88-SDS3	6¾	6⅞	11¼	32	(28) ¼" x 3"	(12) ¼" x 3"	7,670	19,800	18,680	17,085	
EGQ7.25-SDS3	7	7¼	11¼	32	(28) ¼" x 3"	(12) ¼" x 3"	7,670	19,800	18,680	17,085	

1. Uplift loads have been increased for earthquake or wind loading with no further increase allowed. Reduce where other loads govern.
2. "H (Min.)" is the minimum H dimension that may be specified.
3. Loads are based on 750 psi wood bearing for SCL.
4. For normal loading, such as in cantilever construction, use an uplift value of 4,800 lb.

C-C-2021 ©2021 SIMPSON STRONG-TIE COMPANY INC.

LEG/MEG/EG

Beam and Glulam Top-Flange Hangers

Designed to support large members typically found in glulam beam construction.

Material: Stirrup — 7 gauge; LEG/MEG TF — 7 gauge; all other TF — 3 gauge

Finish: Simpson Strong-Tie gray paint. Some products available hot-dip galvanized or in black powder coat.

Installation:

- Use all specified fasteners: see General Notes
- Maintain minimum 4D end distance and edge distance from bolt to end of header and nearest loaded edge per NDS requirements

Options:

Skewed Seat — Top-Flange Models Only

- The LEG/MEG/EG series can be skewed up to 45°. The maximum allowable load is 10,000 lb. for LEG and MEG, 14,250 lb. for EG.

Sloped Seat — Top-Flange Models Only

- The LEG/MEG/EG series can be sloped up to 45°. The maximum allowable load is 9,665 lb.; see illustration.

No Sloped and Skewed Combo Available.

Offset Top Flange

- The LEG/MEG (only) top flange may be offset left or right for placement at the end of a header (see illustration). The maximum allowable load is 5,665 lb. (Min. H = 11" for MEG, 9" for LEG).
- No skews allowed on offset hangers.
- Models available without top flanges; see table loads.

Codes: See p. 11 for Code Reference Key Chart

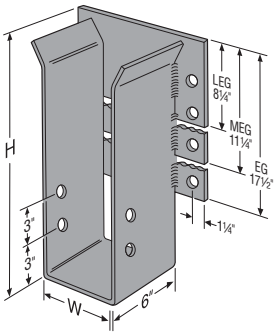

LEG/MEG/EG Without Top Flange
(see options)

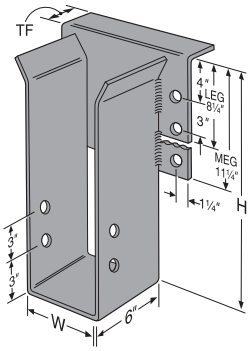

LEG and MEG

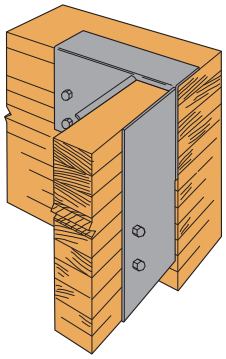

Typical LEG/MEG Top Flange Offset Left

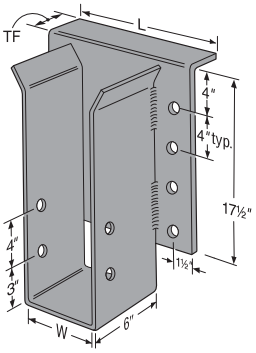

EG

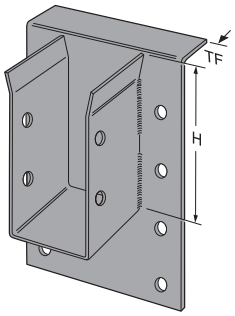

EG with "H" dimension less than the face plate height. The EG's back plate is always 17½", regardless of the stirrup height.

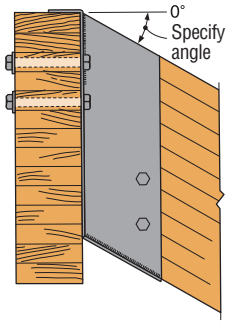

Typical LEG Sloped Down Installation
(MEG/EG similar)

Joist or Purlin Size (in.)	Model No.	Dimensions (in.)					Min. Header Depth (in.)	Bolts				Allowable Loads						Code Ref.
		L	W	Min. H	Max. H	TF		Header		Joist		Without Top Flange		Top Flange No Triangle Theory		Top Flange Triangle Theory		
								Qty.	Dia. (in.)	Qty.	Dia. (in.)	Floor (100)	Roof (125)	Floor (100)	Roof (125)	Floor (100)	Roof (125)	
3⅛ LAM	LEG3	12	3¼	9	33½	2½	10	4	¾	2	¾	3,465	4,330	13,045	13,870	13,045	13,870	IBC, FL, LA
5⅛ LAM	LEG5	12	5¼	9	32½	2½	10	4	¾	2	¾	3,465	4,330	16,290	16,290	13,045	13,870	
	MEG5	12	5¼	9	32½	2½	13	6	¾	2	¾	5,170	6,460	19,710	19,710	14,515	14,515	
	EG5	11¾	5¼	11	32½	2½	20	8	1	2	1	8,870	11,085	20,895	21,815	17,895	19,875	
6¾ LAM	LEG7	12	6⅞	9	31½	2½	10	4	¾	2	¾	3,465	4,330	16,290	16,290	13,045	13,870	
	MEG7	12	6⅞	9	31½	2½	13	6	¾	2	¾	5,170	6,460	19,710	19,710	14,515	14,515	
	EG7	13½	6⅞	11	31½	2½	20	8	1	2	1	8,870	11,085	25,320	25,835	19,305	21,300	
8¾ LAM	EG9	15½	8⅞	11	30½	2½	20	8	1	2	1	8,870	11,085	25,320	25,835	20,895	22,895	

1. Roof loads are 125% of floor loads unless limited by other criteria. Floor loads may be adjusted for load durations according to the code provided they do not exceed those in the roof column.
2. Allowable loads assume a carrying member width of 5⅛".
3. Specify H dimension.
4. Triangle Theory: Some code jurisdictions allow only half of the top-flange bearing area to be considered when performing a top-flange hanger calculation, as there is non-uniform stress under the top flange (presumed to be a triangular-shaped distribution). Therefore, loads are published above using the calculated "Triangle Theory." Loads are also published in the "No Triangle Theory" columns, which are based on calculations assuming full bearing on the top flange which do not exceed the tested value with a reduction factor of 3.

C-C-2021 ©2021 SIMPSON STRONG-TIE COMPANY INC.

MSC

Multiple-Seat Top-Flange Connector

The MSC supports the ridge and two valleys for roof construction. Ideal for dormer roof applications.

Material: Top flange — 3 gauge; stirrups — 11 gauge (MSC2 and MSC1.81), 7 gauge (MSC4 and MSC5)

Finish: Simpson Strong-Tie gray paint. HDG available; contact Simpson Strong-Tie.

Installation:

- Distribute the total load evenly about the centerline to avoid eccentric loading
- Fasten all built-up members together as one unit
- Net height will be calculated based on specified valley member depth and slope by the factory unless noted otherwise

Sloped and/or Skewed Valleys

- The valley stirrups can be sloped down to 45° and skewed from 25° to 45°. (MSC5 skewed 20°–45°.)
- Reminder: Hip and valley slopes are typically much different than roof slopes. See **strongtie.com** Slope and Skew Calculator for assistance in computing slopes and skews.
- The total design load of the hanger is split between the ridge (20%) and each valley (40%).
- MSC connectors can be used for two valley connections with no ridge member. Divide the total load by two for each valley load.
- Hip/valley connections and many combinations of joist sizes, slopes and skews can be manufactured (refer to technical bulletin T-C-MSC-WS at **strongtie.com**).

Codes: See p. 11 for Code Reference Key Chart

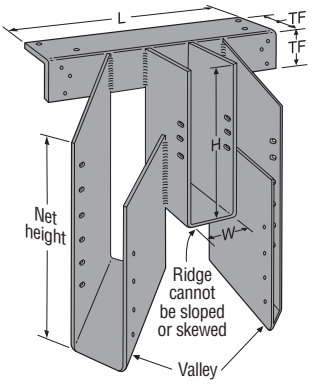

MSC4 with Valley Sloped and Skewed 45°

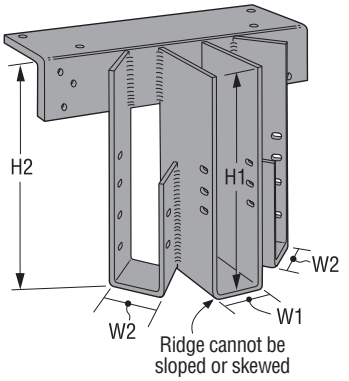

MSC1.81 with Valley Skewed 45° and Sloped 0°

These products are available with additional corrosion protection. For more information, see p. 14.

Model No.	Dimensions (in.)				Fasteners (in.)		Hips		Allowable Loads DF/SP			Code Ref.
	W	H (Min.)	TF	L	Header	Joist	Max. Skew	Max. Slope	Floor/Snow/Roof (100/115/125)			
									Valley	Ridge	Total	
MSC2	1 9/16	5 1/2	2 7/8	12	(10) 0.162 x 3 1/2	(18) 0.148 x 1 1/2	45°	0°	2,270	1,130	5,670	—
						(26) 0.148 x 1 1/2		45°	1,800	900	4,495	
MSC1.81	1 13/16	5 1/2	2 7/8	12	(10) 0.162 x 3 1/2	(18) 0.148 x 1 1/2	45°	0°	2,270	1,130	5,670	
						(26) 0.148 x 1 1/2		45°	1,800	900	4,495	
MSC4	3 9/16	7 1/2	2 7/8	18	(10) 0.162 x 3 1/2	(18) 0.148 x 3	45°	0°	2,985	1,490	7,460	
						(26) 0.148 x 3		45°	2,985	1,490	7,460	
MSC5	5 1/4	9 1/2	2 7/8	26	(13) 0.162 x 3 1/2	(18) 0.162 x 3 1/2	45°	0°	5,775	2,880	14,430	
						(26) 0.162 x 3 1/2		45°	5,630	2,815	14,075	

1. Valley loads are for each valley.
2. Other valley-ridge load distributions are allowed, provided the load sum of all three carried members is distributed symmetrically about the center of the hanger and combined does not exceed the total load.
3. MSC4 is also available in 3 1/8" glulam width.
4. MSC5 is also available in widths up to 5 1/2". W_2 minimum width is 3 1/8".
5. MSC4 is also available in widths down to 1 9/16". Use 0.148" x 1 1/2" nails and MSC2 allowable loads.
6. Refer to technical bulletin T-C-MSC-WS at **strongtie.com** for the hip/valley rafter roof pitch conversion table.
7. **Fasteners:** Nail dimensions are listed diameter by length. See pp. 21–22 for fastener information.

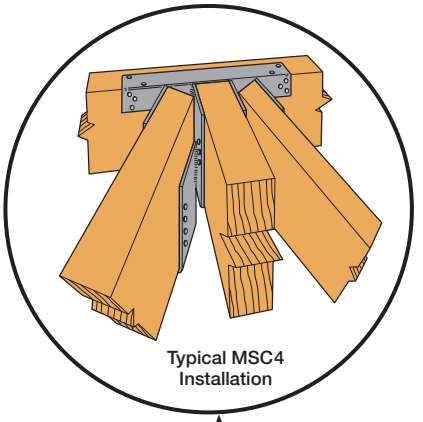

Typical MSC4 Installation

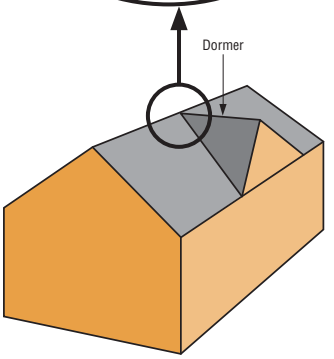

C-C-2021 ©2021 SIMPSON STRONG-TIE COMPANY INC.

Top-Flange Hangers – I-Joists, Glulam and SCL

Visit **strongtie.com/software** to learn more about our Joist Hanger Selector software.

Actual Joist Size (in.)	Model No.	Joist Types				Dimensions (in.)				Fasteners (in.)		Allowable Loads Header Type						
		Glulam	SCL	I-Joist	Web Stiff Reqd.[7]	W	H	B	TF	Header	Joist	Uplift (160)	LVL	PSL	LSL	DF/SP	SPF/HF	DF/SCL I-Joist[4]
1½ x 9½	BA1.56/9.5 (Min.)		•	•	—	1 9/16	9½	3	2½	(16) 0.162 x 3½	(2) 0.148 x 1½	255	4,015	3,705	4,005	3,205	2,660	1,495
	BA1.56/9.5 (Max.)		•	•	✓	1 9/16	9½	3	2½	(16) 0.162 x 3½	(8) 0.148 x 1½	1,275	4,715	4,320	4,500	4,645	4,005	1,495
	WP1.56 H=9.5		•	•	✓	1 9/16	5⅜ to 30	4	2 9/16	(4) 0.162 x 2½	(2) 0.148 x 1½	—	3,095	3,605	3,605	2,985	2,230	2,030
1½ x 11⅞	ITS1.56/11.88		•	•	—	1⅝	11 13/16	2	1 7/16	(6) 0.148 x 3	—	120	1,550	1,365	1,780	1,470	1,150	1,085
	BA1.56/11.88 (Min.)		•	•	—	1 9/16	11⅞	3	2½	(16) 0.162 x 3½	(2) 0.148 x 1½	255	4,015	3,705	4,005	3,780	3,095	1,495
	BA1.56/11.88 (Max.)		•	•	✓	1 9/16	11⅞	3	2½	(16) 0.162 x 3½	(8) 0.148 x 1½	1,275	4,715	4,320	4,500	4,645	4,005	1,495
	WP1.56 H=11.875		•	•	✓	1 9/16	5⅜ to 30	4	2 9/16	(4) 0.162 x 2½	(2) 0.148 x 1½	—	3,095	3,605	3,605	2,985	2,230	2,030
1¾ x 7¼	BA1.81/7.25 (Min.)		•	•	—	1 13/16	7¼	3	2½	(16) 0.162 x 3½	(2) 0.148 x 1½	255	4,015	3,705	4,005	3,205	2,660	1,495
	BA1.81/7.25 (Max.)		•	•	✓	1 13/16	7¼	3	2½	(16) 0.162 x 3½	(8) 0.148 x 1½	1,275	4,715	4,320	4,500	4,720	4,005	1,495
	WP1.81 H=7.25		•	•	✓	1 13/16	5⅜ to 30	4	2 9/16	(4) 0.162 x 2½	(2) 0.148 x 1½	—	3,095	3,605	3,605	2,985	2,230	2,030
1¾ x 9¼	BA1.81/9.25 (Min.)		•	•	—	1 13/16	9¼	3	2½	(16) 0.162 x 3½	(2) 0.148 x 1½	255	4,015	3,705	4,005	2,980	2,660	1,495
	BA1.81/9.25 (Max.)		•	•	✓	1 13/16	9¼	3	2½	(16) 0.162 x 3½	(8) 0.148 x 1½	1,275	4,715	4,320	4,500	4,720	4,005	1,495
	WP1.81 H=9.25		•	•	✓	1 13/16	5⅜ to 30	4	2 9/16	(4) 0.162 x 2½	(2) 0.148 x 1½	—	3,095	3,605	3,605	2,985	2,230	2,030
1¾ x 9½	ITS1.81/9.5		•	•	—	1⅞	9 7/16	2	1 7/16	(6) 0.148 x 3	—	120	1,550	1,365	1,780	1,470	1,150	1,085
	MIT9.5		•	•	—	1 13/16	9½	2½	2 5/16	(8) 0.162 x 3½	(2) 0.148 x 1½	215	2,550	2,140	2,115	2,575	1,665	1,230
	BA1.81/9.5 (Min.)		•	•	—	1 13/16	9½	3	2½	(16) 0.162 x 3½	(2) 0.148 x 1½	255	4,015	3,705	4,005	3,205	2,660	1,495
	BA1.81/9.5 (Max.)		•	•	✓	1 13/16	9½	3	2½	(16) 0.162 x 3½	(8) 0.148 x 1½	1,275	4,715	4,320	4,500	4,720	4,005	1,495
	WP1.81 H=9.5		•	•	✓	1 13/16	5⅜ to 30	4	2 9/16	(4) 0.162 x 2½	(2) 0.148 x 1½	—	3,095	3,605	3,605	2,985	2,230	2,030
1¾ x 11¼	BA1.81/11.25 (Min.)		•	•	—	1 13/16	11¼	3	2½	(16) 0.162 x 3½	(2) 0.148 x 1½	255	4,015	3,705	4,005	3,780	3,095	1,495
	BA1.81/11.25 (Max.)		•	•	✓	1 13/16	11¼	3	2½	(16) 0.162 x 3½	(8) 0.148 x 1½	1,275	4,715	4,320	4,500	4,720	4,005	1,495
	WP1.81 H=11.25		•	•	✓	1 13/16	5⅜ to 30	4	2 9/16	(4) 0.162 x 2½	(2) 0.148 x 1½	—	3,095	3,605	3,605	2,985	2,230	2,030
1¾ x 11⅞	ITS1.81/11.88		•	•	—	1⅞	11 13/16	2	1 7/16	(6) 0.148 x 3	—	120	1,550	1,365	1,780	1,470	1,150	1,085
	MIT11.88		•	•	—	1 13/16	11⅞	2½	2 5/16	(8) 0.162 x 3½	(2) 0.148 x 1½	215	2,550	2,140	2,115	2,575	1,665	1,230
	BA1.81/11.88 (Min.)		•	•	—	1 13/16	11⅞	3	2½	(16) 0.162 x 3½	(2) 0.148 x 1½	255	4,015	3,705	4,005	3,780	3,095	1,495
	BA1.81/11.88 (Max.)		•	•	✓	1 13/16	11⅞	3	2½	(16) 0.162 x 3½	(8) 0.148 x 1½	1,275	4,715	4,320	4,500	4,720	4,005	1,495
	WP1.81 H=11.875		•	•	✓	1 13/16	5⅜ to 30	4	2 9/16	(4) 0.162 x 2½	(2) 0.148 x 1½	—	3,095	3,605	3,605	2,985	2,230	2,030
1¾ x 14	ITS1.81/14		•	•	—	1⅞	13 15/16	2	1 7/16	(6) 0.148 x 3	—	120	1,550	1,365	1,780	1,470	1,150	1,085
	MIT1.81/14		•	•	—	1 13/16	14	2½	2 5/16	(8) 0.162 x 3½	(2) 0.148 x 1½	215	2,550	2,140	2,115	2,575	1,665	1,230
	BA1.81/14 (Min.)		•	•	—	1 13/16	14	3	2½	(16) 0.162 x 3½	(2) 0.148 x 1½	255	4,015	3,705	4,005	3,780	3,095	1,495
	BA1.81/14 (Max.)		•	•	✓	1 13/16	14	3	2½	(16) 0.162 x 3½	(8) 0.148 x 1½	1,275	4,715	4,320	4,500	4,720	4,005	1,495
	WP1.81 H=14		•	•	✓	1 13/16	5⅜ to 30	4	2 9/16	(4) 0.162 x 2½	(2) 0.148 x 1½	—	3,095	3,605	3,605	2,985	2,230	2,030
1¾ x 16	ITS1.81/16		•	•	—	1⅞	15 15/16	2	1 7/16	(6) 0.148 x 3	—	120	1,550	1,365	1,780	1,470	1,150	1,085
	MIT1.81/16		•	•	—	1 13/16	16	2½	2 5/16	(8) 0.162 x 3½	(2) 0.148 x 1½	215	2,550	2,140	2,115	2,575	1,665	1,230
	BA1.81/16 (Min.)		•	•	—	1 13/16	16	3	2½	(16) 0.162 x 3½	(2) 0.148 x 1½	255	4,015	3,705	4,005	3,780	3,095	1,495
	BA1.81/16 (Max.)		•	•	✓	1 13/16	16	3	2½	(16) 0.162 x 3½	(8) 0.148 x 1½	1,275	4,715	4,320	4,500	4,720	4,005	1,495
	WP1.81 H=16		•	•	✓	1 13/16	5⅜ to 30	4	2 9/16	(4) 0.162 x 2½	(2) 0.148 x 1½	—	3,095	3,605	3,605	2,985	2,230	2,030
2 x 9½	ITS2.06/9.5			•	—	2⅛	9 7/16	2	1 7/16	(6) 0.148 x 3	—	120	1,550	1,365	1,780	1,470	1,150	1,085
	BA2.1/9.5 (Min.)			•	—	2⅛	9½	3	2½	(16) 0.162 x 3½	(2) 0.148 x 1½	255	4,015	3,705	4,005	2,980	2,660	1,495
	BA2.1/9.5 (Max.)			•	✓	2⅛	9½	3	2½	(16) 0.162 x 3½	(8) 0.148 x 1½	1,275	4,715	4,320	4,500	4,720	4,005	1,495
	WP2.1 H=9.5			•	✓	2⅛	5⅜ to 30	2½	2 9/16	(4) 0.162 x 2½	(2) 0.148 x 1½	—	3,095	3,605	3,605	2,985	2,230	2,030
2 x 11⅞	ITS2.06/11.88			•	—	2⅛	11 13/16	2	1 7/16	(6) 0.148 x 3	—	120	1,550	1,365	1,780	1,470	1,150	1,085
	MIT2.1/11.88			•	—	2⅛	11⅞	2½	2 5/16	(8) 0.162 x 3½	(2) 0.148 x 1½	215	2,550	2,140	2,115	2,575	1,665	1,230
	BA2.1/11.88 (Min.)			•	—	2⅛	11⅞	3	2½	(16) 0.162 x 3½	(2) 0.148 x 1½	255	4,015	3,705	4,005	3,780	3,095	1,495
	BA2.1/11.88 (Max.)			•	✓	2⅛	11⅞	3	2½	(16) 0.162 x 3½	(8) 0.148 x 1½	1,275	4,715	4,320	4,500	4,720	4,005	1,495
	WP2.1 H=11.875			•	✓	2⅛	5⅜ to 30	2½	2 9/16	(4) 0.162 x 2½	(2) 0.148 x 1½	—	3,095	3,605	3,605	2.985	2,230	2,030
2 x 14	ITS2.06/14			•	—	2⅛	13 15/16	2	1 7/16	(6) 0.148 x 3	—	120	1,550	1,365	1,780	1,470	1,150	1,085
	BA2.1/14 (Min.)			•	—	2⅛	14	3	2½	(16) 0.162 x 3½	(2) 0.148 x 1½	255	4,015	3,705	4,005	3,780	3,095	1,495
	BA2.1/14 (Max.)			•	✓	2⅛	14	3	2½	(16) 0.162 x 3½	(8) 0.148 x 1½	1,275	4,715	4,320	4,500	4,720	4,005	1,495
	WP2.1 H=14			•	✓	2⅛	5⅜ to 30	2½	2 9/16	(4) 0.162 x 2½	(2) 0.148 x 1½	—	3,095	3,605	3,605	2,985	2,230	2,030
2 x 16	ITS2.06/16			•	—	2⅛	15 15/16	2	1 7/16	(6) 0.148 x 3	—	120	1,550	1,365	1,780	1,470	1,150	1,085
	BA2.1/16 (Min.)			•	—	2⅛	16	3	2½	(16) 0.162 x 3½	(2) 0.148 x 1½	255	4,015	3,705	4,005	3,780	3,095	1,495
	BA2.1/16 (Max.)			•	✓	2⅛	16	3	2½	(16) 0.162 x 3½	(8) 0.148 x 1½	1,275	4,715	4,320	4,500	4,720	4,005	1,495
	WP2.1 H=16			•	✓	2⅛	5⅜ to 30	2½	2 9/16	(4) 0.162 x 2½	(2) 0.148 x 1½	—	3,095	3,605	3,605	2,985	2,230	2,030

See footnotes on p. 184.

C-C-2021 ©2021 SIMPSON STRONG-TIE COMPANY INC.

Top-Flange Hangers – I-Joists, Glulam and SCL

Actual Joist Size (in.)	Model No.	Joist Types				Dimensions (in.)				Fasteners (in.)		Allowable Loads Header Type						
		Glulam	SCL	I-Joist	Web Stiff Reqd.[7]	W	H	B	TF	Header	Joist	Uplift (160)	LVL	PSL	LSL	DF/SP	SPF/HF	DF/SCL I-Joist[4]
2 1/16 x 9 1/2	ITS2.06/9.5			•	—	2 1/8	9 7/16	2	1 7/16	(6) 0.148 x 3	—	120	1,550	1,365	1,780	1,470	1,150	1,085
	BA2.1/9.5 (Min.)			•	—	2 1/8	9 1/2	3	2 1/2	(16) 0.162 x 3 1/2	(2) 0.148 x 1 1/2	255	4,015	3,705	4,005	2,980	2,660	1,495
	BA2.1/9.5 (Max.)			•	✓	2 1/8	9 1/2	3	2 1/2	(16) 0.162 x 3 1/2	(8) 0.148 x 1 1/2	1,275	4,715	4,320	4,500	4,720	4,005	1,495
	WP2.1 H=9.5			•	✓	2 1/8	5 3/8 to 30	2 1/2	2 3/16	(4) 0.162 x 2 1/2	(2) 0.148 x 1 1/2	—	3,095	3,605	3,605	2,985	2,230	2,030
2 1/16 x 11 7/8	ITS2.06/11.88			•	—	2 1/8	11 13/16	2	1 7/16	(6) 0.148 x 3	—	120	1,550	1,365	1,780	1,470	1,150	1,085
	MIT2.1/11.88			•	—	2 1/8	11 7/8	2 1/2	2 5/16	(8) 0.162 x 3 1/2	(2) 0.148 x 1 1/2	215	2,550	2,140	2,115	2,575	1,665	1,230
	BA2.1/11.88 (Min.)			•	—	2 1/8	11 7/8	3	2 1/2	(16) 0.162 x 3 1/2	(2) 0.148 x 1 1/2	255	4,015	3,705	4,005	3,780	3,095	1,495
	BA2.1/11.88 (Max.)			•	✓	2 1/8	11 7/8	3	2 1/2	(16) 0.162 x 3 1/2	(8) 0.148 x 1 1/2	1,275	4,715	4,320	4,500	4,720	4,005	1,495
	WP2.1 H=11.875			•	✓	2 1/8	5 3/8 to 30	2 1/2	2 3/16	(4) 0.162 x 2 1/2	(2) 0.148 x 1 1/2	—	3,095	3,605	3,605	2,985	2,230	2,030
2 1/16 x 14	ITS2.06/14			•	—	2 1/8	13 15/16	2	1 7/16	(6) 0.148 x 3	—	120	1,550	1,365	1,780	1,470	1,150	1,085
	BA2.1/14 (Min.)			•	—	2 1/8	14	3	2 1/2	(16) 0.162 x 3 1/2	(2) 0.148 x 1 1/2	255	4,015	3,705	4,005	3,780	3,095	1,495
	BA2.1/14 (Max.)			•	✓	2 1/8	14	3	2 1/2	(16) 0.162 x 3 1/2	(8) 0.148 x 1 1/2	1,275	4,715	4,320	4,500	4,720	4,005	1,495
	WP2.1 H=14			•	✓	2 1/8	5 3/8 to 30	2 1/2	2 3/16	(4) 0.162 x 2 1/2	(2) 0.148 x 1 1/2	—	3,095	3,605	3,605	2,985	2,230	2,030
2 1/16 x 16	ITS2.06/16			•	—	2 1/8	15 15/16	2	1 7/16	(6) 0.148 x 3	—	120	1,550	1,365	1,780	1,470	1,150	1,085
	BA2.1/16 (Min.)			•	—	2 1/8	16	3	2 1/2	(16) 0.162 x 3 1/2	(2) 0.148 x 1 1/2	255	4,015	3,705	4,005	3,780	3,095	1,495
	BA2.1/16 (Max.)			•	✓	2 1/8	16	3	2 1/2	(16) 0.162 x 3 1/2	(8) 0.148 x 1 1/2	1,275	4,715	4,320	4,500	4,720	4,005	1,495
	WP2.1 H=16			•	✓	2 1/8	5 3/8 to 30	2 1/2	2 3/16	(4) 0.162 x 2 1/2	(2) 0.148 x 1 1/2	—	3,095	3,605	3,605	2,985	2,230	2,030
2 1/4 x 9 1/2 to 20	2 1/4"-wide joists use the same hangers as 2 5/16"-wide joists with the following load adjustments to the table loads: ITS download is the lesser of the table load or 1,400 lb.; ITS uplift is 85 lb.; MIT and HIT downloads are the lesser of the table load or 2,140 lb.																	
2 5/16 x 9 1/2	ITS2.37/9.5			•	—	2 7/16	9 7/16	2	1 7/16	(6) 0.148 x 3	—	120	1,550	1,365	1,780	1,470	1,150	1,085
	BA2.37/9.5 (Min.)			•	—	2 3/8	9 1/2	3	2 1/2	(16) 0.162 x 3 1/2	(2) 0.148 x 1 1/2	255	4,015	3,705	4,005	3,205	2,660	1,495
	BA2.37/9.5 (Max.)			•	✓	2 3/8	9 1/2	3	2 1/2	(16) 0.162 x 3 1/2	(8) 0.148 x 1 1/2	1,275	4,715	4,320	4,500	4,720	4,005	1,495
	WP2.37 H=9.5			•	✓	2 3/8	5 3/8 to 30	2 1/2	2 3/16	(4) 0.162 x 2 1/2	(2) 0.148 x 1 1/2	—	3,095	3,605	3,605	2,985	2,230	2030
2 5/16 x 11 7/8	ITS2.37/11.88			•	—	2 7/16	11 13/16	2	1 7/16	(6) 0.148 x 3	—	120	1,550	1,365	1,780	1,470	1,150	1,085
	MIT3511.88			•	—	2 3/8	11 7/8	2 1/2	2 5/16	(8) 0.162 x 3 1/2	(2) 0.148 x 1 1/2	215	2,550	2,140	2,115	2,575	1,665	1,230
	BA2.37/11.88 (Min.)			•	—	2 3/8	11 7/8	3	2 1/2	(16) 0.162 x 3 1/2	(2) 0.148 x 1 1/2	255	4,015	3,705	4,005	3,780	3,095	1,495
	BA2.37/11.88 (Max.)			•	✓	2 3/8	11 7/8	3	2 1/2	(16) 0.162 x 3 1/2	(8) 0.148 x 1 1/2	1,275	4,715	4,320	4,500	4,720	4,005	1,495
	WP2.37 H=11.875			•	✓	2 5/16	5 3/8 to 30	2 1/2	2 1/2	(4) 0.162 x 2 1/2	(2) 0.148 x 1 1/2	—	3,095	3,605	3,605	2.985	2,230	—
2 5/16 x 14	ITS2.37/14			•	—	2 7/16	13 15/16	2	1 7/16	(6) 0.148 x 3	—	120	1,550	1,365	1,780	1,470	1,150	1,085
	MIT3514			•	—	2 3/8	14	2 1/2	2 5/16	(8) 0.162 x 3 1/2	(2) 0.148 x 1 1/2	215	2,550	2,140	2,115	2,575	1,665	1,230
	BA2.37/14 (Min.)			•	—	2 3/8	14	3	2 1/2	(16) 0.162 x 3 1/2	(2) 0.148 x 1 1/2	255	4,015	3,705	4,005	3,780	3,095	1,495
	BA2.37/14 (Max.)			•	✓	2 3/8	14	3	2 1/2	(16) 0.162 x 3 1/2	(8) 0.148 x 1 1/2	1,275	4,715	4,320	4,500	4,720	4,005	1,495
	WP2.37 H=14			•	✓	2 5/16	5 3/8 to 30	2 1/2	2 3/16	(4) 0.162 x 2 1/2	(2) 0.148 x 1 1/2	—	3,095	3,605	3,605	2,985	2,230	2030
2 5/16 x 16	ITS2.37/16			•	—	2 7/16	15 15/16	2	1 7/16	(6) 0.148 x 3	—	120	1,550	1,365	1,780	1,470	1,150	1,085
	MIT3516			•	—	2 3/8	16	2 1/2	2 5/16	(8) 0.162 x 3 1/2	(2) 0.148 x 1 1/2	215	2,550	2,140	2,115	2,575	1,665	1,230
	BA2.37/16 (Min.)			•	—	2 3/8	16	3	2 1/2	(16) 0.162 x 3 1/2	(2) 0.148 x 1 1/2	255	4,015	3,705	4,005	3,780	3,095	1,495
	BA2.37/16 (Max.)			•	✓	2 3/8	16	3	2 1/2	(16) 0.162 x 3 1/2	(8) 0.148 x 1 1/2	1,275	4,715	4,320	4,500	4,720	4,005	1,495
	WP2.37 H=16			•	✓	2 5/16	5 3/8 to 30	2 1/2	2 3/16	(4) 0.162 x 2 1/2	(2) 0.148 x 1 1/2	—	3,095	3,605	3,605	2,985	2,230	2,030
2 5/16 x 18	MIT3518			•	—	2 3/8	18	2 1/2	2 5/16	(8) 0.162 x 3 1/2	(2) 0.148 x 1 1/2	215	2,550	2,140	2,115	2,575	1,665	1,230
	BA2.37/18 (Min.)			•	—	2 3/8	18	3	2 1/2	(16) 0.162 x 3 1/2	(2) 0.148 x 1 1/2	255	4,015	3,705	4,005	3,780	3,095	1,495
	BA2.37/18 (Max.)			•	✓	2 3/8	18	3	2 1/2	(16) 0.162 x 3 1/2	(8) 0.148 x 1 1/2	1,275	4,715	4,320	4,500	4,720	4,005	1,495
	WP2.37 H=18			•	✓	2 5/16	5 3/8 to 30	2 1/2	2 3/16	(4) 0.162 x 2 1/2	(2) 0.148 x 1 1/2	—	3,095	3,605	3,605	2,985	2,230	2,030
2 5/16 x 20	MIT3520			•	—	2 3/8	20	2 1/2	2 5/16	(8) 0.162 x 3 1/2	(2) 0.148 x 1 1/2	215	2,550	2,140	2,115	2,575	1,665	1,230
	BA2.37/20 (Min.)			•	—	2 3/8	20	3	2 1/2	(16) 0.162 x 3 1/2	(2) 0.148 x 1 1/2	255	4,015	3,705	4,005	3,780	3,095	1,495
	BA2.37/20 (Max.)			•	✓	2 3/8	20	3	2 1/2	(16) 0.162 x 3 1/2	(8) 0.148 x 1 1/2	1,275	4,715	4,320	4,500	4,720	4,005	1,495
	WP2.37 H=20			•	✓	2 5/16	5 3/8 to 30	2 1/2	2 3/16	(4) 0.162 x 2 1/2	(2) 0.148 x 1 1/2	—	3,095	3,605	3,605	2,985	2,230	2,030
2 1/2 x 9 1/4	BA2.56 H=9.25 (Min.)			•	—	2 9/16	9 1/4	3	2 1/2	(16) 0.162 x 3 1/2	(2) 0.148 x 1 1/2	255	4,015	3,705	4,005	3,205	2,660	1,495
	BA2.56 H=9.25 (Max.)			•	✓	2 9/16	9 1/4	3	2 1/2	(16) 0.162 x 3 1/2	(8) 0.148 x 1 1/2	1,275	4,715	4,320	4,500	4,720	4,005	1,495
	WP2.56 H=9.25			•	✓	2 9/16	5 3/8 to 30	2 1/2	2 3/16	(4) 0.162 x 2 1/2	(2) 0.148 x 1 1/2	—	3,095	3,605	3,605	2,985	2,230	2,030
	HWP2.56 H=9.25			•	✓	2 9/16	6 to 28	3	2 1/2	(9) 0.162 x 3 1/2	(10) 0.148 x 1 1/2	1,535	3,995	4,500	4,350	3,955	3,955	—

See footnotes on p. 184.

C-C-2021 ©2021 SIMPSON STRONG-TIE COMPANY INC.

Top-Flange Hangers – I-Joists, Glulam and SCL

Actual Joist Size (in.)	Model No.	Joist Types				Dimensions (in.)				Fasteners (in.)		Allowable Loads Header Type						
		Glulam	SCL	I-Joist	Web Stiff Reqd.[7]	W	H	B	TF	Header	Joist	Uplift (160)	LVL	PSL	LSL	DF/SP	SPF/HF	DF/SCL I-Joist[4]
2½ x 9½	ITS2.56/9.5			•	—	2⅝	9 7/16	2	1 7/16	(6) 0.148 x 3	—	120	1,550	1,365	1,780	1,470	1,150	1,085
	BA2.56/9.5 (Min.)			•	—	2 9/16	9½	3	2½	(16) 0.162 x 3½	(2) 0.148 x 1½	255	4,015	3,705	4,005	3,205	2,660	1,495
	BA2.56/9.5 (Max.)			•	✓	2 9/16	9½	3	2½	(16) 0.162 x 3½	(8) 0.148 x 1½	1,275	4,715	4,320	4,500	4,720	4,005	1,495
	WP2.56 H=9.5			•	✓	2 9/16	5⅜ to 30	2	2½	(4) 0.162 x 2½	(2) 0.148 x 1½	—	3,095	3,605	3,605	2,985	2,230	—
	HWP2.56 H=9.5			•	✓	2 9/16	6 to 28	3	2½	(9) 0.162 x 3½	(10) 0.148 x 1½	1,560	3,995	4,500	4,350	3,955	3,955	—
2½ x 11¼	BA2.56 H=11.25 (Min.)			•	—	2 9/16	11¼	3	2½	(16) 0.162 x 3½	(2) 0.148 x 1½	255	4,015	3,705	4,005	3,780	3,095	1,495
	BA2.56 H=11.25 (Max.)			•	✓	2 9/16	11¼	3	2½	(16) 0.162 x 3½	(8) 0.148 x 1½	1,275	4,715	4,320	4,500	4,720	4,005	1,495
	WP2.56 H=11.25			•	✓	2 9/16	5⅜ to 30	2	2½	(4) 0.162 x 2½	(2) 0.148 x 1½	—	3,095	3,605	3,605	2,985	2,230	—
	HWP2.56 H=11.25			•	✓	2 9/16	6 to 28	3	2½	(9) 0.162 x 3½	(10) 0.148 x 1½	1,560	3,995	4,500	4,350	3,955	3,955	—
2½ x 11⅞	ITS2.56/11.88			•	—	2⅝	11 13/16	2	1 7/16	(6) 0.148 x 3	—	120	1,550	1,365	1,780	1,470	1,150	1,085
	MIT311.88			•	—	2 9/16	11⅞	2½	2 5/16	(8) 0.162 x 3½	(2) 0.148 x 1½	255	2,550	2,140	2,115	2,575	1,665	1,230
	BA2.56/11.88 (Min.)			•	—	2 9/16	11⅞	3	2½	(16) 0.162 x 3½	(2) 0.148 x 1½	255	4,015	3,705	4,005	3,780	3,095	1,495
	BA2.56/11.88 (Max.)			•	✓	2 9/16	11⅞	3	2½	(16) 0.162 x 3½	(8) 0.148 x 1½	1,275	4,715	4,320	4,500	4,720	4,005	1,495
	WP2.56 H=11.875			•	✓	2 9/16	5⅜ to 30	2½	2 3/16	(4) 0.162 x 2½	(2) 0.148 x 1½	—	3,095	3,605	3,605	2,985	2,230	2,030
	HWP2.56 H=11.875			•	✓	2 9/16	6 to 28	3	2½	(9) 0.162 x 3½	(10) 0.148 x 1½	1,560	3,995	4,500	4,350	3,955	3,955	—
2½ x 14	ITS2.56/14			•	—	2⅝	13 15/16	2	1 7/16	(6) 0.148 x 3	—	120	1,550	1,365	1,780	1,470	1,150	1,085
	MIT314			•	—	2 9/16	14	2½	2 5/16	(8) 0.162 x 3½	(2) 0.148 x 1½	215	2,550	2,140	2,115	2,575	1,665	1,230
	BA2.56/14 (Min.)			•	—	2 9/16	14	3	2½	(16) 0.162 x 3½	(2) 0.148 x 1½	255	4,015	3,705	4,005	3,780	3,095	1,495
	BA2.56/14 (Max.)			•	✓	2 9/16	14	3	2½	(16) 0.162 x 3½	(8) 0.148 x 1½	1,275	4,715	4,320	4,500	4,720	4,005	1,495
	WP2.56 H=14			•	✓	2 9/16	5⅜ to 30	2½	2 3/16	(4) 0.162 x 2½	(2) 0.148 x 1½	—	3,095	3,605	3,605	2,985	2,230	2,030
	HWP2.56 H=14			•	✓	2 9/16	6 to 28	3	2½	(9) 0.162 x 3½	(10) 0.148 x 1½	1,560	3,995	4,500	4,350	3,955	3,955	—
2½ x 16	ITS2.56/16			•	—	2⅝	15 15/16	2	1 7/16	(6) 0.148 x 3	—	120	1,550	1,365	1,780	1,470	1,150	1,085
	MIT316			•	—	2 9/16	16	2½	2 5/16	(8) 0.162 x 3½	(2) 0.148 x 1½	255	2,550	2,140	2,115	2,575	1,665	1,230
	BA2.56/16 (Min.)			•	—	2 9/16	16	3	2½	(16) 0.162 x 3½	(2) 0.148 x 1½	255	4,015	3,705	4,005	3,780	3,095	1,495
	BA2.56/16 (Max.)			•	✓	2 9/16	16	3	2½	(16) 0.162 x 3½	(8) 0.148 x 1½	1,275	4,715	4,320	4,500	4,720	4,005	1,495
	WP2.56 H=16			•	✓	2 9/16	5⅜ to 30	2½	2 3/16	(4) 0.162 x 2½	(2) 0.148 x 1½	—	3,095	3,605	3,605	2,985	2,230	2,030
	HWP2.56 H=16			•	✓	2 9/16	6 to 28	3	2½	(9) 0.162 x 3½	(10) 0.148 x 1½	1,560	3,995	4,500	4,350	3,955	3,955	—
2½ x 18	MIT318			•	—	2 9/16	18	2½	2 5/16	(8) 0.162 x 3½	(2) 0.148 x 1½	215	2,550	2,140	2,115	2,575	1,665	1,230
	HIT318			•	—	2 9/16	18	3	2⅞	(10) 0.162 x 3½	(2) 0.148 x 1½	305	2,550	2,220	2,500	2,875	1,950	—
	BA2.56/18 (Min.)			•	—	2 9/16	18	3	2½	(16) 0.162 x 3½	(2) 0.148 x 1½	255	4,015	3,705	4,005	3,780	3,095	1,495
	BA2.56/18 (Max.)			•	✓	2 9/16	18	3	2½	(16) 0.162 x 3½	(8) 0.148 x 1½	1,275	4,715	4,320	4,500	4,720	4,005	1,495
	WP2.56 H=18			•	✓	2 9/16	5⅜ to 30	2½	2 3/16	(4) 0.162 x 2½	(2) 0.148 x 1½	—	3,095	3,605	3,605	2,985	2,230	2,030
	HWP2.56 H=18			•	✓	2 9/16	6 to 28	3	2½	(9) 0.162 x 3½	(10) 0.148 x 1½	1,560	3,995	4,500	4,350	3,955	3,955	—
2½ x 20	MIT320			•	—	2 9/16	20	2½	2 5/16	(8) 0.162 x 3½	(2) 0.148 x 1½	215	2,550	2,140	2,115	2,575	1,665	1,230
	HIT320			•	—	2 9/16	20	3	2⅞	(10) 0.162 x 3½	(2) 0.148 x 1½	305	2,550	2,220	2,500	2,875	1,950	—
	BA2.56/20 (Min.)			•	—	2 9/16	20	3	2½	(16) 0.162 x 3½	(2) 0.148 x 1½	255	4,015	3,705	4,005	3,780	3,095	1,495
	BA2.56/20 (Max.)			•	✓	2 9/16	20	3	2½	(16) 0.162 x 3½	(8) 0.148 x 1½	1,275	4,715	4,320	4,500	4,720	4,005	1,495
	WP2.56 H=20			•	✓	2 9/16	5⅜ to 30	2½	2 3/16	(4) 0.162 x 2½	(2) 0.148 x 1½	—	3,095	3,605	3,605	2,985	2,230	2,030
	HWP2.56 H=20			•	✓	2 9/16	6 to 28	3	2½	(9) 0.162 x 3½	(10) 0.148 x 1½	1,560	3,995	4,500	4,350	3,955	3,955	—
2½ x 22	HIT322			•	✓	2 9/16	22	3	2⅞	(10) 0.162 x 3½	(2) 0.148 x 1½	305	2,550	2,220	2,500	2,875	1,950	—
	BA2.56/22 (Min.)			•	—	2 9/16	22	3	2½	(16) 0.162 x 3½	(2) 0.148 x 1½	255	4,015	3,705	4,005	3,780	3,095	1,495
	BA2.56/22 (Max.)			•	✓	2 9/16	22	3	2½	(16) 0.162 x 3½	(8) 0.148 x 1½	1,275	4,715	4,320	4,500	4,720	4,005	1,495
	WP2.56 H=22			•	✓	2 9/16	5⅜ to 30	2½	2 3/16	(4) 0.162 x 2½	(2) 0.148 x 1½	—	3,095	3,605	3,605	2,985	2,230	2,030
	HWP2.56 H=22			•	✓	2 9/16	6 to 28	3	2½	(9) 0.162 x 3½	(12) 0.148 x 1½	1,560	3,995	4,500	4,350	3,955	3,955	—
2½ x 24	HIT324			•	✓	2 9/16	24	3	2⅞	(10) 0.162 x 3½	(2) 0.148 x 1½	305	2,550	2,220	2,500	2,875	1,950	—
	BA2.56/24 (Min.)			•	—	2 9/16	24	3	2½	(16) 0.162 x 3½	(2) 0.148 x 1½	255	4,015	3,705	4,005	3,780	3,095	1,495
	BA2.56/24 (Max.)			•	✓	2 9/16	24	3	2½	(16) 0.162 x 3½	(8) 0.148 x 1½	1,275	4,715	4,320	4,500	4,720	4,005	1,495
	WP2.56 H=24			•	✓	2 9/16	5⅜ to 30	2½	2 3/16	(4) 0.162 x 2½	(2) 0.148 x 1½	—	3,095	3,605	3,605	2,985	2,230	2,030
	HB2.56/24			•	✓	2 9/16	24	3½	3	(22) 0.162 x 3½	(10) 0.162 x 2½	2,075	5,815	5,640	6,395	5,395	3,820	—
	HWP2.56 H=24			•	✓	2 9/16	6 to 28	3	2½	(9) 0.162 x 3½	(12) 0.148 x 1½	1,560	3,995	4,500	4,350	3,955	3,955	—
2½ x 26	BA2.56/26 (Min.)			•	—	2 9/16	26	3	2½	(16) 0.162 x 3½	(2) 0.148 x 1½	255	4,015	3,705	4,005	3,780	3,095	1,495
	BA2.56/26 (Max.)			•	✓	2 9/16	26	3	2½	(16) 0.162 x 3½	(8) 0.148 x 1½	1,275	4,715	4,320	4,500	4,720	4,005	1,495
	WP2.56 H=26			•	✓	2 9/16	5⅜ to 30	2½	2 3/16	(4) 0.162 x 2½	(2) 0.148 x 1½	—	3,095	3,605	3,605	2,985	2,230	2,030
	HB2.56/26			•	✓	2 9/16	26	3½	3	(22) 0.162 x 3½	(10) 0.162 x 2½	2,075	5,815	5,640	6,395	5,395	3,820	—
	HWP2.56 H=26			•	✓	2 9/16	6 to 28	3	2½	(9) 0.162 x 3½	(12) 0.148 x 1½	1,560	3,995	4,500	4,350	3,955	3,955	—

See footnotes on p. 184.

C-C-2021 ©2021 SIMPSON STRONG-TIE COMPANY INC.

Top-Flange Hangers – I-Joists, Glulam and SCL

Actual Joist Size (in.)	Model No.	Joist Types				Dimensions (in.)				Fasteners (in.)		Allowable Loads Header Type						
		Glulam	SCL	I-Joist	Web Stiff Reqd.[7]	W	H	B	TF	Header	Joist	Uplift (160)	LVL	PSL	LSL	DF/SP	SPF/HF	DF/SCL I-Joist[4]
2½ x 28	BA2.56/28 (Min.)			•	—	2 9/16	26	3	2½	(16) 0.162 x 3½	(2) 0.148 x 1½	255	4,015	3,705	4,005	3,780	3,095	1,495
	BA2.56/28 (Max.)			•	✓	2 9/16	26	3	2½	(16) 0.162 x 3½	(8) 0.148 x 1½	1,275	4,715	4,320	4,500	4,720	4,005	1,495
	WP2.56 H=28			•	✓	2 9/16	5⅜ to 30	2½	2 3/16	(4) 0.162 x 2½	(2) 0.148 x 1½	—	3,095	3,605	3,605	2,985	2,230	2,030
	HB2.56/28			•	✓	2 9/16	28	3½	3	(22) 0.162 x 3½	(10) 0.162 x 2½	2,075	5,815	5,640	6,395	5,395	3,820	—
	HWP2.56 H=28			•	✓	2 9/16	6 to 28	3	2½	(9) 0.162 x 3½	(12) 0.148 x 1½	1,560	3,995	4,500	4,350	3,955	3,955	—
2½ x 30	WP2.56 H=30			•	✓	2 9/16	5⅜ to 30	2½	2 3/16	(4) 0.162 x 2½	(2) 0.148 x 1½	—	3,095	3,605	3,605	2,985	2,230	2,030
	HWP2.56 H=30			•	✓	2 9/16	6 to 28	3	2½	(9) 0.162 x 3½	(12) 0.148 x 1½	1,560	3,995	4,500	4,350	3,955	3,955	—
2 9/16 x 9½ to 20	2 9/16"-wide joists use the same hangers as 2 ½"																	
2 11/16	BA2.75X (Min.)	•			—	2¾	7⅛ to 30	3	2½	(16) 0.162 x 3½	(2) 0.148 x 1½	255	4,015	3,705	4,005	3,205	2,660	1,495
	BA2.75X (Max.)	•			✓	2¾	7⅛ to 30	3	2½	(16) 0.162 x 3½	(8) 0.148 x 1½	1,275	4,715	4,320	4,500	4,720	4,005	1495
	HWP2.75		•		✓	2¾	6 to 28	3	2½	(9) 0.162 x 3½	(12) 0.148 x 1½	1,560	3,995	4,500	4,350	3,955	3,955	—
	HWPH2.75		•		✓	2¾	6 to 32	4	2½	(12) 0.162 x 3½	(10) 0.148 x 1½	1,685	6,595	7,025	5,450	5,920	4,740	—
	HGLTV2.75		•		✓	2¾	7½ to 33	6	2⅞	(18) 0.162 x 3½	(6) 0.162 x 3½	1,120	10,585	9,485	9,500	7,805	6,770	—
3⅛ LAM	BA3.25X (Min.)	•			—	3¼	7⅛ to 30	3	2½	(16) 0.162 x 3½	(2) 0.148 x 1½	255	4,015	3,705	4,005	3,205	2,660	1,495
	BA3.25X (Max.)	•			✓	3¼	7⅛ to 30	3	2½	(16) 0.162 x 3½	(8) 0.148 x 1½	1,275	4,715	4,320	4,500	4,720	4,005	1,495
	HB3.25	•			✓	3¼	8 to 33	3½	3	(22) 0.162 x 3½	(10) 0.162 x 3½	2,075	5,815	5,640	6,395	5,395	3,820	—
	WP3.25	•			✓	3¼	5⅜ to 30	2½	2 3/16	(4) 0.162 x 2½	(2) 0.148 x 1½	—	3,095	3,605	3,605	2,985	2,230	2,030
	HWP3.25	•			✓	3¼	6 to 30	3	2½	(9) 0.162 x 3½	(10) 0.148 x 1½	1,560	3,995	4,500	4,350	3,955	3,955	—
	HWPH3.25	•			✓	3¼	6 to 32	3¼	2½	(12) 0.162 x 3½	(10) 0.148 x 1½	1,685	6,595	7,025	5,450	5,920	4,740	—
	HGLT3	•			—	3¼	7½ to 33	6	2½	(18) N54A	(6) N54A	2,450	—	—	—	10,720	—	—
3½ LAM	BA3.56X (Min.)	•	•		—	3 9/16	7⅛ to 30	3	2½	(16) 0.162 x 3½	(2) 0.148 x 1½	255	4,015	3,705	4,005	3,205	2,660	1,495
	BA3.56X (Max.)	•	•		✓	3 9/16	7⅛ to 30	3	2½	(16) 0.162 x 3½	(8) 0.148 x 1½	1,275	4,715	4,320	4,500	4,720	4,005	1,495
	HB3.56	•	•		✓	3 9/16	8 to 33	3½	3	(22) 0.162 x 3½	(10) 0.162 x 3½	2,075	5,815	5,640	6,395	5,395	3,820	—
	WP3.56	•	•		✓	3 9/16	5⅜ to 30	2½	2 3/16	(4) 0.162 x 2½	(2) 0.148 x 1½	—	3,095	3,605	3,605	2,985	2,230	2,030
	HWP3.56	•	•		✓	3 9/16	6 to 30	3	2½	(9) 0.162 x 3½	(10) 0.148 x 1½	1,560	3,995	4,500	4,350	3,955	3,955	—
	HWPH3.56	•	•		✓	3 9/16	6 to 30	3¼	2½	(12) 0.162 x 3½	(10) 0.148 x 1½	1,685	6,595	7,025	5,450	5,920	4,740	—
	HGLT4	•			—	3 9/16	7½ to 33	6	2½	(18) N54A	(6) N54A	2,450	—	—	—	10,720	—	—
	HGLTV4	•	•		✓	3 9/16	7½ to 33	6	2⅞	(18) 0.162 x 3½	(6) 0.162 x 3½	1,120	10,585	9,485	9,500	7,805	6,770	—
3½ x 9¼	BA3.56/9.25 (Min.)		•		—	3 9/16	9¼	3	2½	(16) 0.162 x 3½	(2) 0.148 x 1½	255	4,015	3,705	4,005	3,205	2,660	1,495
	BA3.56/9.25 (Max.)		•		✓	3 9/16	9¼	3	2½	(16) 0.162 x 3½	(8) 0.148 x 1½	1,275	4,715	4,320	4,500	4,720	4,005	1,495
	HB3.56/9.25		•		✓	3 9/16	9¼	3½	3	(22) 0.162 x 3½	(10) 0.162 x 3½	2,075	5,815	5,640	6,395	5,395	3,820	—
	WP3.56 H=9.25		•		✓	3 9/16	5⅜ to 30	2½	2 3/16	(4) 0.162 x 2½	(2) 0.148 x 1½	—	3,095	3,605	3,605	2,985	2,230	2,030
	HWP3.56 H=9.25		•		✓	3 9/16	6 to 28	3	2½	(9) 0.162 x 3½	(10) 0.148 x 1½	1,535	3,995	4,500	4,350	3,955	3,955	—
3½ x 9½	ITS3.56/9.5			•	—	3⅝	9 7/16	2	1 7/16	(6) 0.148 x 3	—	120	1,550	1,365	1,780	1,470	1,150	1,085
	MIT49.5	•	•	•	—	3 9/16	9½	2½	2 5/16	(8) 0.162 x 3½	(2) 0.148 x 1½	—	1,675	1,675	1,675	1,675	1,665	1,230
					✓							215	2,550	2,140	2,115	2,575	1,665	1,230
	BA3.56/9.5 (Min.)	•	•	•	—	3 9/16	9½	3	2½	(16) 0.162 x 3½	(2) 0.148 x 1½	255	4,015	3,705	4,005	3,205	2,660	1,495
	BA3.56/9.5 (Max.)	•	•	•	✓	3 9/16	9½	3	2½	(16) 0.162 x 3½	(8) 0.148 x 1½	1,275	4,715	4,320	4,500	4,720	4,005	1,495
	HB3.56/9.5	•	•	•	✓	3 9/16	9½	3½	3	(22) 0.162 x 3½	(10) 0.162 x 3½	2,075	5,815	5,640	6,395	5,395	3,820	—
	WP3.56 H=9.5	•	•	•	✓	3 9/16	5⅜ to 30	2½	2 3/16	(4) 0.162 x 2½	(2) 0.148 x 1½	—	3,095	3,605	3,605	2,985	2,230	2,030
	HWP3.56 H=9.5	•	•	•	✓	3 9/16	6 to 28	3	2½	(9) 0.162 x 3½	(10) 0.148 x 1½	1,535	3,995	4,500	4,350	3,955	3,955	—
3½ x 10½	BA3.56 H=10.5 (Min.)	•			—	3 9/16	7⅛ to 30	3	2½	(16) 0.162 x 3½	(2) 0.148 x 1½	255	4,015	3,705	4,005	3,205	2,660	1,495
	BA3.56 H =10.5 (Max.)	•			✓	3 9/16	7⅛ to 30	3	2½	(16) 0.162 x 3½	(8) 0.148 x 1½	1,275	4,715	4,320	4,500	4,720	4,005	1,495
	HB3.56X	•			✓	3 9/16	11¼	3½	3	(22) 0.162 x 3½	(10) 0.162 x 3½	2,075	5,815	5,640	6,395	5,395	3,820	—
	WP3.56 H=10.5	•			✓	3 9/16	5⅜ to 30	2½	2 3/16	(4) 0.162 x 2½	(2) 0.148 x 1½	—	3,095	3,605	3,605	2,985	2,230	2,030
	HWP3.56 H=10.5	•			✓	3 9/16	6 to 28	3	2½	(9) 0.162 x 3½	(10) 0.148 x 1½	1,535	3,995	4,500	4,350	3,955	3,955	—
3½ x 11¼	BA3.56/11.25 (Min.)	•	•		—	3 9/16	11¼	3	2½	(16) 0.162 x 3½	(2) 0.148 x 1½	255	4,015	3,705	4,005	3,780	3,095	1,495
	BA3.56/11.25 (Max.)	•	•		✓	3 9/16	11¼	3	2½	(16) 0.162 x 3½	(8) 0.148 x 1½	1,275	4,715	4,320	4,500	4,720	4,005	1,495
	HB3.56/11.25	•	•		✓	3 9/16	11¼	3½	3	(22) 0.162 x 3½	(10) 0.162 x 3½	2,075	5,815	5,640	6,395	5,395	3,820	—
	WP3.56 H=11.25	•	•		✓	3 9/16	5⅜ to 30	2½	2 3/16	(4) 0.162 x 2½	(2) 0.148 x 1½	—	3,095	3,605	3,605	2,985	2,230	2,030
	HWP3.56 H=11.25	•	•		✓	3 9/16	6 to 28	3	2½	(9) 0.162 x 3½	(10) 0.148 x 1½	1,535	3,995	4,500	4,350	3,955	3,955	—

See footnotes on p. 184.

C-C-2021 ©2021 SIMPSON STRONG-TIE COMPANY INC.

Top-Flange Hangers – I-Joists, Glulam and SCL

SIMPSON Strong-Tie®

Actual Joist Size (in.)	Model No.	Joist Types				Dimensions (in.)				Fasteners (in.)		Allowable Loads Header Type						
		Glulam	SCL	I-Joist	Web Stiff Reqd.[7]	W	H	B	TF	Header	Joist	Uplift (160)	LVL	PSL	LSL	DF/SP	SPF/HF	DF/SCL I-Joist[4]
3½ x 11⅞	ITS3.56/11.88			•	—	3⅝	11 13/16	2	1 7/16	(6) 0.148 x 3	—	120	1,550	1,365	1,780	1,470	1,150	1,085
	MIT411.88	•	•	•	—	3 9/16	11⅞	2½	2 5/16	(8) 0.162 x 3½	(2) 0.148 x 1½	—	1,675	1,675	1,675	1,675	1,665	1,230
					✓							215	2,550	2,140	2,115	2,575	1,665	1,230
	BA3.56/11.88 (Min.)	•	•	•	—	3 9/16	11⅞	3	2½	(16) 0.162 x 3½	(2) 0.148 x 1½	255	4,015	3,705	4,005	3,780	3,095	1,495
	BA3.56/11.88 (Max.)	•	•	•	✓	3 9/16	11⅞	3	2½	(16) 0.162 x 3½	(8) 0.148 x 1½	1,275	4,715	4,320	4,500	4,720	4,005	1,495
	HB3.56/11.88	•	•	•	✓	3 9/16	11⅞	3½	3	(22) 0.162 x 3½	(10) 0.162 x 3½	2,075	5,815	5,640	6,395	5,395	3,820	—
	WP3.56 H=11.875	•	•	•	✓	3 9/16	5⅜ to 30	2½	2 3/16	(4) 0.162 x 2½	(2) 0.148 x 1½	—	3,095	3,605	3,605	2,985	2,230	2,030
	HWP3.56 H=11.875	•	•	•	✓	3 9/16	6 to 28	3	2½	(9) 0.162 x 3½	(10) 0.148 x 1½	1,535	3,995	4,500	4,350	3,955	3,955	—
	HWPH3.56 H=11.875	•	•	•	✓	3 9/16	6 to 32	3¼	2½	(12) 0.162 x 3½	(10) 0.148 x 1½	1,685	6,595	7,025	5,450	5,920	4,740	—
	HGLT4 H=11.875	•			—	3 9/16	7½ to 33	6	2½	(18) N54A	(6) N54A	2,450	—	—	—	10,720	—	—
	HGLTV3.511	•	•	•	✓	3 9/16	11⅞	6	2⅞	(18) 0.162 x 3½	(6) 0.162 x 3½	1,120	10,585	9,485	9,500	7,805	6,770	—
3½ x 14	ITS3.56/14			•	—	3⅝	13 15/16	2	1 7/16	(6) 0.148 x 3	—	120	1,550	1,365	1,780	1,470	1,150	1,085
	MIT414	•	•	•	—	3 9/16	14	2½	2 5/16	(8) 0.162 x 3½	(2) 0.148 x 1½	—	1,675	1,675	1,675	1,675	1,665	1,230
					✓							215	2,550	2,140	2,115	2,575	1,665	1,230
	BA3.56/14 (Min.)	•	•	•	—	3 9/16	14	3	2½	(16) 0.162 x 3½	(2) 0.148 x 1½	255	4,015	3,705	4,005	3,780	3,095	1,495
	BA3.56/14 (Max.)	•	•	•	✓	3 9/16	14	3	2½	(16) 0.162 x 3½	(8) 0.148 x 1½	1,275	4,715	4,320	4,500	4,720	4,005	1,495
	HB3.56/14	•	•	•	✓	3 9/16	14	3½	3	(22) 0.162 x 3½	(10) 0.162 x 3½	2,075	5,815	5,640	6,395	5,395	3,820	—
	WP3.56 H=14	•	•	•	✓	3 9/16	5⅜ to 30	2½	2 3/16	(4) 0.162 x 2½	(2) 0.148 x 1½	—	3,095	3,605	3,605	2,985	2,230	2,030
	HWP3.56 H=14	•	•	•	✓	3 9/16	6 to 28	3	2½	(9) 0.162 x 3½	(10) 0.148 x 1½	1,535	3,995	4,500	4,350	3,955	3,955	—
	HWPH3.56 H=14	•	•	•	✓	3 9/16	6 to 32	3¼	2½	(12) 0.162 x 3½	(10) 0.148 x 1½	1,685	6,595	7,025	5,450	5,920	4,740	—
	HGLT4 H=14	•			—	3⅝	7½ to 33	6	2½	(18) N54A	(6) N54A	2,450	—	—	—	10,720	—	—
	HGLTV3.514	•	•	•	✓	3 9/16	14	6	2⅞	(18) 0.162 x 3½	(6) 0.162 x 3½	1,120	10,585	9,485	9,500	7,805	6,770	—
3½ x 16	ITS3.56/16			•	—	3⅝	15 15/16	2	1 7/16	(6) 0.148 x 3	—	120	1,550	1,365	1,780	1,470	1,150	1,085
	MIT416	•	•	•	—	3 9/16	16	2½	2 5/16	(8) 0.162 x 3½	(2) 0.148 x 1½	—	1,675	1,675	1,675	1,675	1,665	1,230
					✓							215	2,550	2,140	2,115	2,575	1,665	1,230
	BA3.56/16 (Min.)	•	•	•	—	3 9/16	16	3	2½	(16) 0.162 x 3½	(2) 0.148 x 1½	255	4,015	3,705	4,005	3,780	3,095	1,495
	BA3.56/16 (Max.)	•	•	•	✓	3 9/16	16	3	2½	(16) 0.162 x 3½	(8) 0.148 x 1½	1,275	4,715	4,320	4,500	4,720	4,005	1,495
	HB3.56/16	•	•	•	✓	3 9/16	16	3½	3	(22) 0.162 x 3½	(10) 0.162 x 3½	2,075	5,815	5,640	6,395	5,395	3,820	—
	WP3.56 H=16	•	•	•	✓	3 9/16	5⅜ to 30	2½	2 3/16	(4) 0.162 x 2½	(2) 0.148 x 1½	—	3,095	3,605	3,605	2,985	2,230	2,030
	HWP3.56 H=16	•	•	•	✓	3 9/16	6 to 28	3	2½	(9) 0.162 x 3½	(12) 0.148 x 1½	1,560	3,995	4,500	4,350	3,955	3,955	—
	HWPH3.56 H=16	•	•	•	✓	3 9/16	6 to 32	3¼	2½	(12) 0.162 x 3½	(12) 0.148 x 1½	2,075	6,595	7,025	5,450	5,920	4,740	—
	HGLT4 H=16	•			—	3⅝	7½ to 33	6	2½	(18) N54A	(6) N54A	2,450	—	—	—	10,720	—	—
	HGLTV3.516	•	•	•	✓	3 9/16	16	6	2⅞	(18) 0.162 x 3½	(6) 0.162 x 3½	1,120	10,585	9,485	9,500	7,805	6,770	—
3½ x 18	MIT418	•	•	•	—	3 9/16	18	2½	2 5/16	(8) 0.162 x 3½	(2) 0.148 x 1½	—	1,675	1,675	1,675	1,675	1,665	1,230
					✓							215	2,550	2,140	2,115	2,575	1,665	1,230
	HIT418	•	•	•	—	3 9/16	18	3	2⅜	(10) 0.162 x 3½	(2) 0.148 x 1½	305	2,550	2,220	2,500	2,875	1,950	—
	BA3.56/18 (Min.)	•	•	•	—	3 9/16	18	3	2½	(16) 0.162 x 3½	(2) 0.148 x 1½	255	4,015	3,705	4,005	3,780	3,095	1,495
	BA3.56/18 (Max.)	•	•	•	✓	3 9/16	18	3	2½	(16) 0.162 x 3½	(8) 0.148 x 1½	1,275	4,715	4,320	4,500	4,720	4,005	1,495
	HB3.56/18	•	•	•	✓	3 9/16	18	3½	3	(22) 0.162 x 3½	(10) 0.162 x 3½	2,075	5,815	5,640	6,395	5,395	3,820	—
	WP3.56 H=18	•	•	•	✓	3 9/16	5⅜ to 30	2½	2 3/16	(4) 0.162 x 2½	(2) 0.148 x 1½	—	3,095	3,605	3,605	2,985	2,230	2,030
	HWP3.56 H=18	•	•	•	✓	3 9/16	6 to 28	3	2½	(9) 0.162 x 3½	(12) 0.148 x 1½	1,560	3,995	4,500	4,350	3,955	3,955	—
	HWPH3.56 H=18	•	•	•	✓	3 9/16	6 to 32	3¼	2½	(12) 0.162 x 3½	(12) 0.148 x 1½	2,075	6,595	7,025	5,450	5,920	4,740	—
	HGLT4 H=18	•			—	3⅝	7½ to 33	6	2½	(18) N54A	(6) N54A	2,450	—	—	—	10,720	—	—
	HGLTV3.518	•	•	•	✓	3 9/16	18	6	2⅞	(18) 0.162 x 3½	(6) 0.162 x 3½	1,120	10,585	9,485	9,500	7,805	6,770	—
3½ x 20	MIT420	•	•	•	—	3 9/16	20	2½	2 5/16	(8) 0.162 x 3½	(2) 0.148 x 1½	—	1,675	1,675	1,675	1,675	1,665	1,230
					✓							215	2,550	2,140	2,115	2,575	1,665	1,230
	HIT420		•	•	—	3 9/16	20	3	2⅜	(10) 0.162 x 3½	(2) 0.148 x 1½	305	2,550	2,220	2,500	2,875	1,950	—
	BA3.56/20 (Min.)		•	•	—	3 9/16	20	3	2½	(16) 0.162 x 3½	(2) 0.148 x 1½	255	4,015	3,705	4,005	3,780	3,095	1,495
	BA3.56/20 (Max.)		•	•	✓	3 9/16	20	3	2½	(16) 0.162 x 3½	(8) 0.148 x 1½	1,275	4,715	4,320	4,500	4,720	4,005	1,495
	HB3.56/20		•	•	✓	3 9/16	20	3½	3	(22) 0.162 x 3½	(10) 0.162 x 3½	2,075	5,815	5,640	6,395	5,395	3,820	—
	WP3.56 H=20		•	•	✓	3 9/16	5⅜ to 30	2½	2 3/16	(4) 0.162 x 2½	(2) 0.148 x 1½	—	3,095	3,605	3,605	2,985	2,230	2,030
	HWP3.56 H=20		•	•	✓	3 9/16	6 to 28	3	2½	(9) 0.162 x 3½	(12) 0.148 x 1½	1,560	3,995	4,500	4,350	3,955	3,955	—
	HWPH3.56 H=20		•	•	✓	3 9/16	6 to 32	3¼	2½	(12) 0.162 x 3½	(12) 0.148 x 1½	2,075	6,595	7,025	5,450	5,920	4,740	—
	HGLTV4 H=20		•	•	✓	3⅝	7½ to 33	6	2⅞	(18) 0.162 x 3½	(6) 0.162 x 3½	1,120	10,585	9,485	9,500	7,805	6,770	—

See footnotes on p. 184.

C-C-2021 ©2021 SIMPSON STRONG-TIE COMPANY INC.

Top-Flange Hangers – I-Joists, Glulam and SCL

Actual Joist Size (in.)	Model No.	Joist Types				Dimensions (in.)				Fasteners (in.)		Allowable Loads Header Type						
		Glulam	SCL	I-Joist	Web Stiff Reqd.[7]	W	H	B	TF	Header	Joist	Uplift (160)	LVL	PSL	LSL	DF/SP	SPF/HF	DF/SCL I-Joist[4]
3½ x 22	HIT422		•	•	—	3⁹⁄₁₆	22	3	2⅜	(10) 0.162 x 3½	(2) 0.148 x 1½	305	2,550	2,220	2,500	2,875	1,950	—
	BA3.56/22 (Min.)		•	•	—	3⁹⁄₁₆	22	3	2½	(16) 0.162 x 3½	(2) 0.148 x 1½	255	4,015	3,705	4,005	3,780	3,095	1,495
	BA3.56/22 (Max.)		•	•	✓	3⁹⁄₁₆	22	3	2½	(16) 0.162 x 3½	(8) 0.148 x 1½	1,275	4,715	4,320	4,500	4,720	4,005	1,495
	HB3.56/22		•	•	✓	3⁹⁄₁₆	22	3½	3	(22) 0.162 x 3½	(10) 0.162 x 3½	2,075	5,815	5,640	6,395	5,395	3,820	—
	WP3.56 H=22		•	•	✓	3⁹⁄₁₆	5⅜ to 30	2½	2³⁄₁₆	(4) 0.162 x 2½	(2) 0.148 x 1½	—	3,095	3,605	3,605	2,985	2,230	2,030
	HWP3.56 H=22		•	•	✓	3⁹⁄₁₆	6 to 28	3	2½	(9) 0.162 x 3½	(12) 0.148 x 1½	1,560	3,995	4,500	4,350	3,955	3,955	—
	HWPH3.56 H=22		•	•	✓	3⁹⁄₁₆	6 to 32	3¼	2½	(12) 0.162 x 3½	(12) 0.148 x 1½	2,075	6,595	7,025	5,450	5,920	4,740	—
	HGLTV4 H=22		•	•	✓	3⁹⁄₁₆	7½ to 33	6	2⅞	(18) 0.162 x 3½	(6) 0.162 x 3½	1,120	10,585	9,485	9,500	7,805	6,770	—
3½ x 24	HIT424		•	•	—	3⁹⁄₁₆	24	3	2⅜	(10) 0.162 x 3½	(2) 0.148 x 1½	305	2,550	2,220	2,500	2,875	1,950	—
	BA3.56/24 (Min.)		•	•	—	3⁹⁄₁₆	24	3	2½	(16) 0.162 x 3½	(2) 0.148 x 1½	255	4,015	3,705	4,005	3,780	3,095	1,495
	BA3.56/24 (Max.)		•	•	✓	3⁹⁄₁₆	24	3	2½	(16) 0.162 x 3½	(8) 0.148 x 1½	1,275	4,715	4,320	4,500	4,720	4,005	1,495
	HB3.56/24		•	•	✓	3⁹⁄₁₆	24	3½	3	(22) 0.162 x 3½	(10) 0.162 x 3½	2,075	5,815	5,640	6,395	5,395	3,820	—
	WP3.56 H=24		•	•	✓	3⁹⁄₁₆	5⅜ to 30	2½	2³⁄₁₆	(4) 0.162 x 2½	(2) 0.148 x 1½	—	3,095	3,605	3,605	2,985	2,230	2,030
	HWP3.56 H=24		•	•	✓	3⁹⁄₁₆	6 to 28	3	2½	(9) 0.162 x 3½	(12) 0.148 x 1½	1,560	3,995	4,500	4,350	3,955	3,955	—
	HWPH3.56 H=24		•	•	✓	3⁹⁄₁₆	6 to 32	3¼	2½	(12) 0.162 x 3½	(12) 0.148 x 1½	2,075	6,595	7,025	5,450	5,920	4,740	—
	HGLTV4 H=24		•	•	✓	3⁹⁄₁₆	7½ to 33	6	2⅞	(18) 0.162 x 3½	(6) 0.162 x 3½	1,120	10,585	9,485	9,500	7,805	6,770	—
3½ x 26	BA3.56/26 (Min.)		•	•	—	3⁹⁄₁₆	26	3	2½	(16) 0.162 x 3½	(2) 0.148 x 1½	255	4,015	3,705	4,005	3,780	3,095	1,495
	BA3.56/26 (Max.)		•	•	✓	3⁹⁄₁₆	26	3	2½	(16) 0.162 x 3½	(8) 0.148 x 1½	1,275	4,715	4,320	4,500	4,720	4,005	1,495
	HB3.56/26		•	•	✓	3⁹⁄₁₆	26	3½	3	(22) 0.162 x 3½	(10) 0.162 x 3½	2,075	5,815	5,640	6,395	5,395	3,820	—
	WP3.56 H=26		•	•	✓	3⁹⁄₁₆	5⅜ to 30	2½	2³⁄₁₆	(4) 0.162 x 2½	(2) 0.148 x 1½	—	3,095	3,605	3,605	2,985	2,230	2,030
	HWP3.56 H=26		•	•	✓	3⁹⁄₁₆	6 to 28	3	2½	(9) 0.162 x 3½	(12) 0.148 x 1½	1,560	3,995	4,500	4,350	3,955	3,955	—
	HWPH3.56 H=26		•	•	✓	3⁹⁄₁₆	6 to 32	3¼	2½	(12) 0.162 x 3½	(12) 0.148 x 1½	2,075	6,595	7,025	5,450	5,920	4,740	—
	HGLTV4 H=26		•	•	✓	3⁹⁄₁₆	7½ to 33	6	2⅞	(18) 0.162 x 3½	(6) 0.162 x 3½	1,120	10,585	9,485	9,500	7,805	6,770	—
3½ x 28	BA3.56/28 (Min.)		•	•	—	3⁹⁄₁₆	28	3	2½	(16) 0.162 x 3½	(2) 0.148 x 1½	255	4,015	3,705	4,005	3,780	3,095	1,495
	BA3.56/28 (Max.)		•	•	✓	3⁹⁄₁₆	28	3	2½	(16) 0.162 x 3½	(8) 0.148 x 1½	1,275	4,715	4,320	4,500	4,720	4,005	1,495
	HB3.56/28		•	•	✓	3⁹⁄₁₆	28	3½	3	(22) 0.162 x 3½	(10) 0.162 x 3½	2,075	5,815	5,640	6,395	5,395	3,820	—
	WP3.56 H=28		•	•	✓	3⁹⁄₁₆	5⅜ to 30	2½	2³⁄₁₆	(4) 0.162 x 2½	(2) 0.148 x 1½	—	3,095	3,605	3,605	2,985	2,230	2,030
	HWP3.56 H=28		•	•	✓	3⁹⁄₁₆	6 to 28	3	2½	(9) 0.162 x 3½	(12) 0.148 x 1½	1,560	3,995	4,500	4,350	3,955	3,955	—
	HWPH3.56 H=28		•	•	✓	3⁹⁄₁₆	6 to 32	3¼	2½	(12) 0.162 x 3½	(12) 0.148 x 1½	2,075	6,595	7,025	5,450	5,920	4,740	—
	HGLTV4 H=28		•	•	✓	3⁹⁄₁₆	7½ to 33	6	2⅞	(18) 0.162 x 3½	(6) 0.162 x 3½	1,120	10,585	9,485	9,500	7,805	6,770	—
3½ x 30	BA3.56/30 (Min.)		•	•	—	3⁹⁄₁₆	30	3	2½	(16) 0.162 x 3½	(2) 0.148 x 1½	255	4,015	3,705	4,005	3,780	3,095	1,495
	BA3.56/30 (Max.)		•	•	✓	3⁹⁄₁₆	30	3	2½	(16) 0.162 x 3½	(8) 0.148 x 1½	1,275	4,715	4,320	4,500	4,720	4,005	1,495
	HB3.56/30		•	•	✓	3⁹⁄₁₆	30	3½	3	(22) 0.162 x 3½	(10) 0.162 x 3½	2,075	5,815	5,640	6,395	5,395	3,820	—
	WP3.56 H=30		•	•	✓	3⁹⁄₁₆	5⅜ to 30	2½	2³⁄₁₆	(4) 0.162 x 2½	(2) 0.148 x 1½	—	3,095	3,605	3,605	2,985	2,230	2,030
	HWP3.56 H=30		•	•	✓	3⁹⁄₁₆	6 to 28	3	2½	(9) 0.162 x 3½	(12) 0.148 x 1½	1,560	3,995	4,500	4,350	3,955	3,955	—
	HWPH3.56 H=30		•	•	✓	3⁹⁄₁₆	6 to 32	3¼	2½	(12) 0.162 x 3½	(12) 0.148 x 1½	2,075	6,595	7,025	5,450	5,920	4,740	—
	HGLTV4 H=30		•	•	✓	3⁹⁄₁₆	7½ to 33	6	2⅞	(18) 0.162 x 3½	(6) 0.162 x 3½	1,120	10,585	9,485	9,500	7,805	6,770	—
Double 2 x 9½	MIT4.12/9.5		•	•	—	4⅛	9½	2½	2⁵⁄₁₆	(8) 0.162 x 3½	(2) 0.148 x 1½	—	1,675	1,675	1,675	1,675	1,665	1,230
					✓							215	2,550	2,140	2,115	2,575	1,665	1,230
	BA4.12/9.5 (Min.)			•	—	4⅛	9½	3	2½	(16) 0.162 x 3½	(2) 0.148 x 1½	255	4,015	3,705	4,005	2,980	2,660	1,495
	BA4.12/9.5 (Max.)			•	✓	4⅛	9½	3	2½	(16) 0.162 x 3½	(8) 0.148 x 1½	1,275	4,715	4,320	4,500	4,720	4,005	1,495
	WP4.12 H=9.5			•	✓	4⅛	5⅜ to 30	2½	2³⁄₁₆	(4) 0.162 x 2½	(2) 0.148 x 1½	—	3,095	3,605	3,605	2,985	2,230	2,030
Double 2 x 11⅞	MIT4.12/11.88			•	—	4⅛	11⅞	2½	2⁵⁄₁₆	(8) 0.162 x 3½	(2) 0.148 x 1½	—	1,675	1,675	1,675	1,675	1,665	1,230
					✓							215	2,550	2,140	2,115	2,575	1,665	1,230
	BA4.12/11.88 (Min.)			•	—	4⅛	11⅞	3	2½	(16) 0.162 x 3½	(2) 0.148 x 1½	255	4,015	3,705	4,005	3,780	3,095	1,495
	BA4.12/11.88 (Max.)			•	✓	4⅛	11⅞	3	2½	(16) 0.162 x 3½	(8) 0.148 x 1½	1,275	4,715	4,320	4,500	4,720	4,005	1,495
	WP4.12 H=11.875			•	✓	4⅛	5⅜ to 30	2½	2³⁄₁₆	(4) 0.162 x 2½	(2) 0.148 x 1½	—	3,095	3,605	3,605	2,985	2,230	2,030
Double 2 x 14	BA4.12/14 (Min.)			•	—	4⅛	14	3	2½	(16) 0.162 x 3½	(2) 0.148 x 1½	255	4,015	3,705	4,005	3,780	3,095	1,495
	BA4.12/14 (Max.)			•	✓	4⅛	14	3	2½	(16) 0.162 x 3½	(8) 0.148 x 1½	1,275	4,715	4,320	4,500	4,720	4,005	1,495
	WP4.12 H=14			•	✓	4⅛	5⅜ to 30	2½	2³⁄₁₆	(4) 0.162 x 2½	(2) 0.148 x 1½	—	3,095	3,605	3,605	2,985	2,230	2,030
Double 2 x 16	BA4.12/16 (Min.)			•	—	4⅛	16	3	2½	(16) 0.162 x 3½	(2) 0.148 x 1½	255	4,015	3,705	4,005	3,780	2,665	1,495
	BA4.12/16 (Max.)			•	✓	4⅛	16	3	2½	(16) 0.162 x 3½	(8) 0.148 x 1½	1,275	4,715	4,320	4,500	4,720	4,005	1,495
	WP4.12 H=16			•	✓	4⅛	5⅜ to 30	2½	2³⁄₁₆	(4) 0.162 x 2½	(2) 0.148 x 1½	—	3,095	3,605	3,605	2,985	2,230	2,030
Double 2¹⁄₁₆ x 9½	MIT4.28/9.5			•	—	4⁹⁄₃₂	9½	2½	2⁵⁄₁₆	(8) 0.162 x 3½	(2) 0.148 x 1½	—	1,675	1,675	1,675	1,675	1,665	1,230
					✓							215	2,550	2,140	2,115	2,575	1,665	1,230
	BA4.28/9.5 (Min.)			•	—	4⁹⁄₃₂	9½	3	2½	(16) 0.162 x 3½	(2) 0.148 x 1½	255	4,015	3,705	4,005	2,980	2,660	1,495
	BA4.28/9.5 (Max.)			•	✓	4⁹⁄₃₂	9½	3	2½	(16) 0.162 x 3½	(8) 0.148 x 1½	1,275	4,715	4,320	4,500	4,720	4,005	1,495
	WP4.28X H=9.5			•	✓	4⁹⁄₃₂	5⅜ to 30	2½	2³⁄₁₆	(4) 0.162 x 2½	(2) 0.148 x 1½	—	3,095	3,605	3,605	2,985	2,230	2,030

See footnotes on p. 184.

C-C-2021 ©2021 SIMPSON STRONG-TIE COMPANY INC.

Top-Flange Hangers – I-Joists, Glulam and SCL

SIMPSON Strong-Tie

Actual Joist Size (in.)	Model No.	Joist Types				Dimensions (in.)				Fasteners (in.)		Allowable Loads Header Type						
		Glulam	SCL	I-Joist	Web Stiff Reqd.[7]	W	H	B	TF	Header	Joist	Uplift (160)	LVL	PSL	LSL	DF/SP	SPF/HF	DF/SCL I-Joist[4]
Double 2 1/16 x 11 7/8	MIT4.28/11.88			•	—	4 9/32	11 7/8	2 1/2	2 5/16	(8) 0.162 x 3 1/2	(2) 0.148 x 1 1/2	—	1,675	1,675	1,675	1,675	1,665	1,230
					✓							215	2,550	2,140	2,115	2,575	1,665	1,230
	BA4.28/11.88 (Min.)			•	—	4 9/32	11 7/8	3	2 1/2	(16) 0.162 x 3 1/2	(2) 0.148 x 1 1/2	255	4,015	3,705	4,005	3,780	3,095	1,495
	BA4.28/11.88 (Max.)			•	✓	4 9/32	11 7/8	3	2 1/2	(16) 0.162 x 3 1/2	(8) 0.148 x 1 1/2	1,275	4,715	4,320	4,500	4,720	4,005	1,495
	WP4.28X H=11.875			•	✓	4 9/32	5 3/8 to 30	2 1/2	2 3/16	(4) 0.162 x 2 1/2	(2) 0.148 x 1 1/2	—	3,095	3,605	3,605	2,985	2,230	2,030
Double 2 1/16 x 14	MIT4.28/14			•	—	4 9/32	14	2 1/2	2 5/16	(8) 0.162 x 3 1/2	(2) 0.148 x 1 1/2	—	1,675	1,675	1,675	1,675	1,665	1,230
					✓							215	2,550	2,140	2,115	2,575	1,665	1,230
	BA4.28/14 (Min.)			•	—	4 9/32	14	3	2 1/2	(16) 0.162 x 3 1/2	(2) 0.148 x 1 1/2	255	4,015	3,705	4,005	3,780	3,095	1,495
	BA4.28/14 (Max.)			•	✓	4 9/32	14	3	2 1/2	(16) 0.162 x 3 1/2	(8) 0.148 x 1 1/2	1,275	4,715	4,320	4,500	4,720	4,005	1,495
	WP4.28X H=14			•	✓	4 9/32	5 3/8 to 30	2 1/2	2 3/16	(4) 0.162 x 2 1/2	(2) 0.148 x 1 1/2	—	3,095	3,605	3,605	2,985	2,230	2,030
Double 2 1/16 x 16	BA4.28/16 (Min.)			•	—	4 9/32	16	3	2 1/2	(16) 0.162 x 3 1/2	(2) 0.148 x 1 1/2	255	4,015	3,705	4,005	3,780	3,095	1,495
	BA4.28/16 (Max.)			•	✓	4 9/32	16	3	2 1/2	(16) 0.162 x 3 1/2	(8) 0.148 x 1 1/2	1,275	4,715	4,320	4,500	4,720	4,005	1,495
	WP4.28X H=16			•	✓	4 9/32	5 3/8 to 30	2 1/2	2 3/16	(4) 0.162 x 2 1/2	(2) 0.148 x 1 1/2	—	3,095	3,605	3,605	2,985	2,230	2,030
Double 2 1/4 x 9 1/2 to 20	Double 2 1/4"-wide joists use the same hangers as double 2 5/16"-wide joists with the following loads adjustments: MIT downloads are the lesser of the table load or 2,140 lb.																	
Double 2 5/16 x 9 1/2	MIT359.5-2			•	—	4 3/4	9 1/2	2 1/2	2 5/16	(8) 0.162 x 3 1/2	(2) 0.148 x 1 1/2	—	1,675	1,675	1,675	1,675	1,665	1,230
					✓							215	2,550	2,140	2,115	2,575	1,665	1,230
	BA4.75/9.5 (Min.)			•	—	4 3/4	9 1/2	3	2 1/2	(16) 0.162 x 3 1/2	(2) 0.148 x 1 1/2	255	4,015	3,705	4,005	2,980	2,660	1,495
	BA4.75/9.5 (Max.)			•	✓	4 3/4	9 1/2	3	2 1/2	(16) 0.162 x 3 1/2	(8) 0.148 x 1 1/2	1,275	4,715	4,320	4,500	4,720	4,005	1,495
	WP4.75 H=9.5			•	✓	4 3/4	5 3/8 to 30	2 1/2	2 5/16	(4) 0.162 x 2 1/2	(2) 0.148 x 3	—	3,095	3,605	3,605	2,985	2,230	2,030
Double 2 5/16 x 11 7/8	MIT3511.88-2			•	—	4 3/4	11 7/8	2 1/2	2 5/16	(8) 0.162 x 3 1/2	(2) 0.148 x 1 1/2	—	1,675	1,675	1,675	1,675	1,665	1,230
					✓							215	2,550	2,140	2,115	2,575	1,665	1,230
	BA4.75/11.88 (Min.)			•	—	4 3/4	11 7/8	3	2 1/2	(16) 0.162 x 3 1/2	(2) 0.148 x 1 1/2	255	4,015	3,705	4,005	3,780	3,095	1,495
	BA4.75/11.88 (Max.)			•	✓	4 3/4	11 7/8	3	2 1/2	(16) 0.162 x 3 1/2	(8) 0.148 x 1 1/2	1,275	4,715	4,320	4,500	4,720	4,005	1,495
	WP4.75 H=11.875			•	✓	4 3/4	5 3/8 to 30	2 1/2	2 5/16	(4) 0.162 x 2 1/2	(2) 0.148 x 1 1/2	—	3,095	3,605	3,605	2,985	2,230	2,030
Double 2 5/16 x 14	MIT3514-2			•	—	4 3/4	14	2 1/2	2 5/16	(8) 0.162 x 3 1/2	(2) 0.148 x 1 1/2	—	1,675	1,675	1,675	1,675	1,665	1,230
					✓							215	2,550	2,140	2,115	2,575	1,665	1,230
	BA4.75/14 (Min.)			•	—	4 3/4	14	3	2 1/2	(16) 0.162 x 3 1/2	(2) 0.148 x 1 1/2	255	4,015	3,705	4,005	3,780	3,095	1,495
	BA4.75/14 (Max.)			•	✓	4 3/4	14	3	2 1/2	(16) 0.162 x 3 1/2	(8) 0.148 x 1 1/2	1,275	4,715	4,320	4,500	4,720	4,005	1,495
	WP4.75 H=14			•	✓	4 3/4	5 3/8 to 30	2 1/2	2 5/16	(4) 0.162 x 2 1/2	(2) 0.148 x 1 1/2	—	3,095	3,605	3,605	2,985	2,230	2,030
Double 2 5/16 x 16	MIT4.75/16			•	—	4 3/4	16	2 1/2	2 5/16	(8) 0.162 x 3 1/2	(2) 0.148 x 1 1/2	—	1,675	1,675	1,675	1,675	1,665	1,230
					✓							215	2,550	2,140	2,115	2,575	1,665	1,230
	BA4.75/16 (Min.)			•	—	4 3/4	16	3	2 1/2	(16) 0.162 x 3 1/2	(2) 0.148 x 1 1/2	255	4,015	3,705	4,005	3,780	3,095	1,495
	BA4.75/16 (Max.)			•	✓	4 3/4	16	3	2 1/2	(16) 0.162 x 3 1/2	(8) 0.148 x 1 1/2	1,275	4,715	4,320	4,500	4,720	4,005	1,495
	WP4.75 H=16			•	✓	4 3/4	5 3/8 to 30	2 1/2	2 5/16	(4) 0.162 x 2 1/2	(2) 0.148 x 1 1/2	—	3,095	3,605	3,605	2,985	2,230	2,030
Double 2 5/16 x 18	BA4.75/18 (Min.)			•	—	4 3/4	18	3	2 1/2	(16) 0.162 x 3 1/2	(2) 0.148 x 1 1/2	255	4,015	3,705	4,005	3,780	3,095	1,495
	BA4.75/18 (Max.)			•	✓	4 3/4	18	3	2 1/2	(16) 0.162 x 3 1/2	(8) 0.148 x 1 1/2	1,275	4,715	4,320	4,500	4,720	4,005	1,495
	WP4.75 H=18			•	✓	4 3/4	5 3/8 to 30	2 1/2	2 5/16	(4) 0.162 x 2 1/2	(2) 0.148 x 1 1/2	—	3,095	3,605	3,605	2,985	2,230	2,030
Double 2 5/16 x 20	BA4.75/20 (Min.)			•	—	4 3/4	18	3	2 1/2	(16) 0.162 x 3 1/2	(2) 0.148 x 1 1/2	255	4,015	3,705	4,005	3,780	3,095	1,495
	BA4.75/20 (Max.)			•	✓	4 3/4	18	3	2 1/2	(16) 0.162 x 3 1/2	(8) 0.148 x 1 1/2	1,275	4,715	4,320	4,500	4,720	4,005	1,495
	WP4.75 H=20			•	✓	4 3/4	5 3/8 to 30	2 1/2	2 5/16	(4) 0.162 x 2 1/2	(2) 0.148 x 1 1/2	—	3,095	3,605	3,605	2,985	2,230	2,030
Double 2 1/2 x 9 1/4	BA5.12 H=9.25 (Min.)			•	—	5 1/8	9 1/4	3	2 1/2	(16) 0.162 x 3 1/2	(2) 0.148 x 1 1/2	255	4,015	3,705	4,005	3,205	2,660	1,495
	BA5.12 H=9.25 (Max.)			•	✓	5 1/8	9 1/4	3	2 1/2	(16) 0.162 x 3 1/2	(8) 0.148 x 1 1/2	1,275	4,715	4,320	4,500	4,720	4,005	1,495
	WP5.12 H=9.25			•	✓	5 1/8	5 3/8 to 30	2 1/2	2 5/16	(4) 0.162 x 2 1/2	(2) 0.148 x 1 1/2	—	3,095	3,605	3,605	2,985	2,230	2,030
Double 2 1/2 x 9 1/2	MIT39.5-2			•	—	5 1/8	9 1/2	2 1/2	2 5/16	(8) 0.162 x 3 1/2	(2) 0.148 x 1 1/2	—	1,675	1,675	1,675	1,675	1,665	1,230
					✓							215	2,550	2,140	2,115	2,575	1,665	1,230
	BA5.12/9.5 (Min.)			•	—	5 1/8	9 1/2	3	2 1/2	(16) 0.162 x 3 1/2	(2) 0.148 x 1 1/2	255	4,015	3,705	4,005	3,205	2,660	1,495
	BA5.12/9.5 (Max.)			•	✓	5 1/8	9 1/2	3	2 1/2	(16) 0.162 x 3 1/2	(8) 0.148 x 1 1/2	1,275	4,715	4,320	4,500	4,720	4,005	1,495
	WP5.12 H=9.5			•	✓	5 1/8	5 3/8 to 30	2 1/2	2 5/16	(4) 0.162 x 2 1/2	(2) 0.148 x 1 1/2	—	3,095	3,605	3,605	2,985	2,230	2,030
Double 2 1/2 x 11 7/8	MIT311.88-2			•	—	5 1/8	11 7/8	2 1/2	2 5/16	(8) 0.162 x 3 1/2	(2) 0.148 x 1 1/2	—	1,675	1,675	1,675	1,675	1,665	1,230
					✓							215	2,550	2,140	2,115	2,575	1,665	1,230
	BA5.12/11.88 (Min.)			•	—	5 1/8	11 7/8	3	2 1/2	(16) 0.162 x 3 1/2	(2) 0.148 x 1 1/2	255	4,015	3,705	4,005	3,780	3,095	1,495
	BA5.12/11.88 (Max.)			•	✓	5 1/8	11 7/8	3	2 1/2	(16) 0.162 x 3 1/2	(8) 0.148 x 1 1/2	1,275	4,715	4,320	4,500	4,720	4,005	1,495
	HB5.12/11.88			•	✓	5 1/8	11 7/8	3 1/2	3	(22) 0.162 x 3 1/2	(10) 0.162 x 3 1/2	2,075	5,815	5,640	6,395	5,395	3,820	—
	WP5.12 H=11.875			•	✓	5 1/8	5 3/8 to 30	2 1/2	2 5/16	(4) 0.162 x 2 1/2	(2) 0.148 x 1 1/2	—	3,095	3,605	3,605	2,985	2,230	2,030

See footnotes on p. 184.

C-C-2021 ©2021 SIMPSON STRONG-TIE COMPANY INC.

Top-Flange Hangers – I-Joists, Glulam and SCL

Actual Joist Size (in.)	Model No.	Joist Types				Dimensions (in.)				Fasteners (in.)		Allowable Loads Header Type						
		Glulam	SCL	I-Joist	Web Stiff Reqd.[7]	W	H	B	TF	Header	Joist	Uplift (160)	LVL	PSL	LSL	DF/SP	SPF/HF	DF/SCL I-Joist[4]
Double 2½ x 14	MIT314-2			•	—	5⅛	14	2½	2⁵⁄₁₆	(8) 0.162 x 3½	(2) 0.148 x 1½	—	1,675	1,675	1,675	1,675	1,665	1,230
					✓							215	2,550	2,140	2,115	2,575	1,665	1,230
	BA5.12/14 (Min.)			•	—	5⅛	14	3	2½	(16) 0.162 x 3½	(2) 0.148 x 1½	255	4,015	3,705	4,005	3,780	3,095	1,495
	BA5.12/14 (Max.)			•	✓	5⅛	14	3	2½	(16) 0.162 x 3½	(8) 0.148 x 1½	1,275	4,715	4,320	4,500	4,720	4,005	1,495
	HB5.12/14			•	✓	5⅛	14	3½	3	(22) 0.162 x 3½	(10) 0.162 x 3½	2,075	5,815	5,640	6,395	5,395	3,820	—
	WP5.12 H=14			•	✓	5⅛	5⅜ to 30	2½	2⁵⁄₁₆	(4) 0.162 x 2½	(2) 0.148 x 1½	—	3,095	3,605	3,605	2.985	2,230	2,030
Double 2½ x 16	MIT5.12/16			•	—	5⅛	16	2½	2⁵⁄₁₆	(8) 0.162 x 3½	(2) 0.148 x 1½	—	1,675	1,675	1,675	1,675	1,665	1,230
					✓							215	2,550	2,140	2,115	2,575	1,665	1,230
	BA5.12/16 (Min.)			•	—	5⅛	16	3	2½	(16) 0.162 x 3½	(2) 0.148 x 1½	255	4,015	3,705	4,005	3,780	3,095	1,495
	BA5.12/16 (Max.)			•	✓	5⅛	16	3	2½	(16) 0.162 x 3½	(8) 0.148 x 1½	1,275	4,715	4,320	4,500	4,720	4,005	1,495
	HB5.12/16			•	✓	5⅛	16	3½	3	(22) 0.162 x 3½	(10) 0.162 x 3½	2,075	5,815	5,640	6,395	5,395	3,820	—
	WP5.12 H=16			•	✓	5⅛	5⅜ to 30	2½	2⁵⁄₁₆	(4) 0.162 x 2½	(2) 0.148 x 1½	—	3,095	3,605	3,605	2,985	2,230	2,030
	HWP5.12 H=16			•	✓	5⅛	6 to 28	3	2½	(9) 0.162 x 3½	(12) 0.148 x 1½	1,560	3,995	4,500	4,350	3,955	3,955	—
Double 2½ x 18	BA5.12/18 (Min.)			•	—	5⅛	18	3	2½	(16) 0.162 x 3½	(2) 0.148 x 1½	255	4,015	3,705	4,005	3,780	3,095	1,495
	BA5.12/18 (Max.)			•	✓	5⅛	18	3	2½	(16) 0.162 x 3½	(8) 0.148 x 1½	1,275	4,715	4,320	4,500	4,720	4,005	1,495
	HB5.12/18			•	✓	5⅛	18	3½	3	(22) 0.162 x 3½	(10) 0.162 x 3½	2,075	5,815	5,640	6,395	5,395	3,820	—
	WP5.12 H=18			•	✓	5⅛	5⅜ to 30	2½	2⁵⁄₁₆	(4) 0.162 x 2½	(2) 0.148 x 1½	—	3,095	3,605	3,605	2.985	2,230	2,030
	HWP5.12 H=18			•	✓	5⅛	6 to 28	3	2½	(9) 0.162 x 3½	(12) 0.148 x 1½	1,560	3,995	4,500	4,350	3,955	3,955	—
Double 2½ x 20	BA5.12/20 (Min.)			•	—	5⅛	20	3	2½	(16) 0.162 x 3½	(2) 0.148 x 1½	255	4,015	3,705	4,005	3,780	3,095	1,495
	BA5.12/20 (Max.)			•	✓	5⅛	20	3	2½	(16) 0.162 x 3½	(8) 0.148 x 1½	1,275	4,715	4,320	4,500	4,720	4,005	1,495
	HB5.12/20			•	✓	5⅛	20	3½	3	(22) 0.162 x 3½	(10) 0.162 x 3½	2,075	5,815	5,640	6,395	5,395	3,820	—
	WP5.12 H=20			•	✓	5⅛	5⅜ to 30	2½	2⁵⁄₁₆	(4) 0.162 x 2½	(2) 0.148 x 1½	—	3,095	3,605	3,605	2,985	2,230	2,030
	HWP5.12 H=20			•	✓	5⅛	6 to 28	3	2½	(9) 0.162 x 3½	(12) 0.148 x 1½	1,560	3,995	4,500	4,350	3,955	3,955	—
Double 2½ x 22	BA5.12/22 (Min.)			•	—	5⅛	22	3	2½	(16) 0.162 x 3½	(2) 0.148 x 1½	255	4,015	3,705	4,005	3,780	3,095	1,495
	BA5.12/22 (Max.)			•	✓	5⅛	22	3	2½	(16) 0.162 x 3½	(8) 0.148 x 1½	1,275	4,715	4,320	4,500	4,720	4,005	1,495
	HB5.12/22			•	✓	5⅛	22	3½	3	(22) 0.162 x 3½	(10) 0.162 x 3½	2,075	5,815	5,640	6,395	5,395	3,820	—
	WP5.12 H=22			•	✓	5⅛	5⅜ to 30	2½	2⁵⁄₁₆	(4) 0.162 x 2½	(2) 0.148 x 1½	—	3,095	3,605	3,605	2,985	2,230	2,030
	HWP5.12 H=22			•	✓	5⅛	6 to 28	3	2½	(9) 0.162 x 3½	(12) 0.148 x 1½	1,560	3,995	4,500	4,350	3,955	3,955	—
Double 2½ x 24	BA5.12/24 (Min.)			•	—	5⅛	24	3	2½	(16) 0.162 x 3½	(2) 0.148 x 1½	255	4,015	3,705	4,005	3,780	3,095	1,495
	BA5.12/24 (Max.)			•	✓	5⅛	24	3	2½	(16) 0.162 x 3½	(8) 0.148 x 1½	1,275	4,715	4,320	4,500	4,720	4,005	1,495
	HB5.12/24			•	✓	5⅛	24	3½	3	(22) 0.162 x 3½	(10) 0.162 x 3½	2,075	5,815	5,640	6,395	5,395	3,820	—
	WP5.12X H=24			•	✓	5⅛	5⅜ to 30	2½	2⁵⁄₁₆	(4) 0.162 x 2½	(2) 0.148 x 1½	—	3,095	3,605	3,605	2.985	2,230	2,030
	HWP5.12 H=24			•	✓	5⅛	6 to 28	3	2½	(9) 0.162 x 3½	(12) 0.148 x 1½	1,560	3,995	4,500	4,350	3,955	3,955	—
Double 2½ x 26	BA5.12/26 (Max.)			•	✓	5⅛	26	3	2½	(16) 0.162 x 3½	(8) 0.148 x 1½	1,275	4,715	4,320	4,500	4,720	4,005	1495
	HB5.12/26			•	✓	5⅛	26	3½	3	(22) 0.162 x 3½	(10) 0.162 x 3½	2,075	5,815	5,640	6,395	5,395	3,820	—
	WP5.12 H=26			•	✓	5⅛	5⅜ to 30	2½	2⁵⁄₁₆	(4) 0.162 x 2½	(2) 0.148 x 1½	—	3,095	3,605	3,605	2,985	2,230	2,030
	HWP5.12 H=26			•	✓	5⅛	6 to 28	3	2½	(9) 0.162 x 3½	(12) 0.148 x 1½	1,560	3,995	4,500	4,350	3,955	3,955	—
	HWPH5.12 H=28			•	✓	5⅛	6 to 32	3¼	2½	(12) 0.162 x 3½	(12) 0.148 x 1½	2,075	6,595	7,025	5,450	5,920	4,740	—
Double 2½ x 28	HB5.12/28			•	✓	5⅛	28	3½	3	(22) 0.162 x 3½	(10) 0.162 x 3½	2,075	5,815	5,640	6,395	5,395	3,820	—
	WP5.12 H=28			•	✓	5⅛	5⅜ to 30	2½	2⁵⁄₁₆	(4) 0.162 x 2½	(2) 0.148 x 1½	—	3,095	3,605	3,605	2,985	2,230	2,030
	HWP5.12 H=28			•	✓	5⅛	6 to 28	3	2½	(9) 0.162 x 3½	(12) 0.148 x 1½	1,560	3,995	4,500	4,350	3,955	3,955	—
	HWPH5.12 H=28			•	✓	5⅛	6 to 32	3¼	2½	(12) 0.162 x 3½	(12) 0.148 x 1½	2,075	6,595	7,025	5,450	5,920	4,740	—
Double 2½ x 30	WP5.12 H=30			•	✓	5⅛	5⅜ to 30	2½	2⁵⁄₁₆	(4) 0.162 x 2½	(2) 0.148 x 1½	—	3,095	3,605	3,605	2,985	2,230	2,030
	HWP5.12 H=30			•	✓	5⅛	6 to 28	3	2½	(9) 0.162 x 3½	(12) 0.148 x 1½	1,560	3,995	4,500	4,350	3,955	3,955	—
	HWPH5.12 H=30			•	✓	5⅛	6 to 32	3¼	2½	(12) 0.162 x 3½	(12) 0.148 x 1½	2,075	6,595	7,025	5,450	5,920	4,740	—
5⅛ LAM	HB5.25	•	•	•	✓	5¼	8 to 33	3½	3	(22) 0.162 x 3½	(10) 0.162 x 3½	2,075	5,815	5,640	6,395	5,395	3,820	—
	HWP5.25	•	•	•	✓	5¼	6 to 28	3	2½	(9) 0.162 x 3½	(12) 0.148 x 1½	1,560	3,995	4,500	4,350	3,955	3,955	—
	HWPH5.25	•	•	•	✓	5¼	6 to 28	3¼	2½	(12) 0.162 x 3½	(12) 0.148 x 1½	2,075	6,595	7,025	5,450	5,920	4,740	—
	HGLTV5	•	•			5¼	7½ to 32½	6	2⅞	(18) 0.162 x 3½	(6) 0.162 x 3½	1,120	10,585	9,485	9,500	7,805	6,770	—
	HGLT5	•				5¼	7½ to 32½	6	2½	(18) N54A	(6) N54A	2,450	—	—	—	10,720	—	—
	HGLS5	•				5¼	7½ to 32½	6	SPEC	(28) N54A	(16) N54A	2,265	—	—	—	13,850	—	—
	EGQ5.25-SDS	•				5¼	11¼ to 32	6	3	(28) ¼ x 3 SDS	(12) ¼ x 3 SDS	7,670	19,800	18,680	19,800	17,085	12,915	—

See footnotes on p. 184.

C-C-2021 ©2021 SIMPSON STRONG-TIE COMPANY INC.

Top-Flange Hangers – I-Joists, Glulam and SCL

SIMPSON Strong-Tie

Actual Joist Size (in.)	Model No.	Joist Types				Dimensions (in.)				Fasteners (in.)		Allowable Loads Header Type						
		Glulam	SCL	I-Joist	Web Stiff Reqd.[7]	W	H	B	TF	Header	Joist	Uplift (160)	LVL	PSL	LSL	DF/SP	SPF/HF	DF/SCL I-Joist[4]
5¼ x 9¼	HB5.50/9.25		•		✓	5½	9¼	3½	3	(22) 0.162 x 3½	(10) 0.162 x 3½	2,075	5,815	5,640	6,395	5,395	3,820	—
	HWP5.37 H=9.25		•		✓	5⅜	6 to 28	3	2½	(9) 0.162 x 3½	(10) 0.148 x 1½	1,560	3,995	4,500	4,350	3,955	3,955	—
	HWPH5.37 H=9.25		•		✓	5⅜	6 to 32	3¼	2½	(12) 0.162 x 3½	(10) 0.148 x 1½	1,685	6,595	7,025	5,450	5,920	4,740	—
	HGLTV5.37 H=9.25		•			5⅜	7½ to 32½	6	2⅞	(18) 0.162 x 3½	(6) 0.162 x 3½	1,120	10,585	9,485	9,500	7,805	6,770	—
5¼ x 9½	HB5.50/9.5		•		✓	5½	9½	3½	3	(22) 0.162 x 3½	(10) 0.162 x 3½	2,075	5,815	5,640	6,395	5,395	3,820	—
	HWP5.37 H=9.5		•		✓	5⅜	6 to 28	3	2½	(9) 0.162 x 3½	(10) 0.148 x 1½	1,560	3,995	4,500	4,350	3,955	3,955	—
	HWPH5.37 H=9.5		•		✓	5⅜	6 to 32	3¼	2½	(12) 0.162 x 3½	(10) 0.148 x 1½	1,685	6,595	7,025	5,450	5,920	4,740	—
	HGLTV5.37 H=9.5		•		✓	5⅜	7½ to 32½	6	2⅞	(18) 0.162 x 3½	(6) 0.162 x 3½	1,120	10,585	9,485	9,500	7,805	6,770	—
5¼ x 11¼	HB5.50/11.25		•		✓	5½	11¼	3½	3	(22) 0.162 x 3½	(10) 0.162 x 3½	2,075	5,815	5,640	6,395	5,395	3,820	—
	HWP5.37 H=11.25		•		✓	5⅜	6 to 28	3	2½	(9) 0.162 x 3½	(10) 0.148 x 1½	1,560	3,995	4,500	4,350	3,955	3,955	—
	HWPH5.37 H=11.25		•		✓	5⅜	6 to 32	3¼	2½	(12) 0.162 x 3½	(10) 0.148 x 1½	1,685	6,595	7,025	5,450	5,920	4,740	—
	HGLTV5.37 H=11.25		•		✓	5⅜	7½ to 32½	6	2⅞	(18) 0.162 x 3½	(6) 0.162 x 3½	1,120	10,585	9,485	9,500	7,805	6,770	—
5¼ x 11⅞	HB5.50/11.88		•		✓	5½	11⅞	3½	3	(22) 0.162 x 3½	(10) 0.162 x 3½	2,075	5,815	5,640	6,395	5,395	3,820	—
	HWP5.37 H=11.875		•		✓	5⅜	6 to 28	3	2½	(9) 0.162 x 3½	(10) 0.148 x 1½	1,560	3,995	4,500	4,350	3,955	3,955	—
	HWPH5.37 H=11.875		•		✓	5⅜	6 to 32	3¼	2½	(12) 0.162 x 3½	(10) 0.148 x 1½	1,685	6,595	7,025	5,450	5,920	4,740	—
	HGLTV5.37 H=11.875		•		✓	5⅜	7½ to 32½	6	2⅞	(18) 0.162 x 3½	(6) 0.162 x 3½	1,120	10,585	9,485	9,500	7,805	6,770	—
	EGQ5.37-SDS H=11.875		•			5⅜	11¼ to 32	6	3	(28) ¼ x 3 SDS	(12) ¼ x 3 SDS	7,670	19,800	18,680	19,800	17,085	12,915	—
5¼ x 14	HB5.50/14		•		✓	5½	14	3½	3	(22) 0.162 x 3½	(10) 0.162 x 3½	2,075	5,815	5,640	6,395	5,395	3,820	—
	HWP5.37 H=14		•		✓	5⅜	6 to 28	3	2½	(9) 0.162 x 3½	(10) 0.148 x 1½	1,535	3,995	4,500	4,350	3,955	3,955	—
	HWPH5.37 H=14		•		✓	5⅜	6 to 32	3¼	2½	(12) 0.162 x 3½	(10) 0.148 x 1½	1,685	6,595	7,025	5,450	5,920	4,740	—
	HGLTV5.37 H=14		•		✓	5⅜	7½ to 32½	6	2⅞	(18) 0.162 x 3½	(6) 0.162 x 3½	1,120	10,585	9,485	9,500	7,805	6,770	—
	EGQ5.37-SDS H=14		•			5⅜	11¼ to 32	6	3	(28) ¼ x 3 SDS	(12) ¼ x 3 SDS	7,670	19,800	18,680	19,800	17,085	12,915	—
5¼ x 16	HB5.50/16		•		✓	5½	16	3½	3	(22) 0.162 x 3½	(10) 0.162 x 3½	2,075	5,815	5,640	6,395	5,395	3,820	—
	HWP5.37 H=16		•		✓	5⅜	6 to 28	3	2½	(9) 0.162 x 3½	(12) 0.148 x 1½	1,560	3,995	4,500	4,350	3,955	3,955	—
	HWPH5.37 H=16		•		✓	5⅜	6 to 32	3¼	2½	(12) 0.162 x 3½	(12) 0.148 x 1½	2,075	6,595	7,025	5,450	5,920	4,740	—
	HGLTV5.37 H=16		•		✓	5⅜	7½ to 32½	6	2⅞	(18) 0.162 x 3½	(6) 0.162 x 3½	1,120	10,585	9,485	9,500	7,805	6,770	—
	EGQ5.37-SDS H=16		•			5⅜	11¼ to 32	6	3	(28) ¼ x 3 SDS	(12) ¼ x 3 SDS	7,670	19,800	18,680	19,800	17,085	12,915	—
5¼ x 18	HB5.50/18		•		✓	5½	18	3½	3	(22) 0.162 x 3½	(10) 0.162 x 3½	2,075	5,815	5,640	6,395	5,395	3,820	—
	HWPH5.37 H=18		•		✓	5⅜	6 to 32	3¼	2½	(12) 0.162 x 3½	(12) 0.148 x 1½	2,075	6,595	7,025	5,450	5,920	4,740	—
	HGLTV5.37 H=18		•		✓	5⅜	7½ to 32½	6	2⅞	(18) 0.162 x 3½	(6) 0.162 x 3½	1,120	10,585	9,485	9,500	7,805	6,770	—
	EGQ5.37-SDS H=18		•			5⅜	11¼ to 32	6	3	(28) ¼ x 3 SDS	(12) ¼ x 3 SDS	7,670	19,800	18,680	19,800	17,085	12,915	—
5¼ x 20	HB5.50/20		•		✓	5½	20	3½	3	(22) 0.162 x 3½	(10) 0.162 x 3½	2,075	5,815	5,640	6,395	5,395	3,820	—
	HWPH5.37 H=20		•		✓	5⅜	6 to 32	3¼	2½	(12) 0.162 x 3½	(12) 0.148 x 1½	2,075	6,595	7,025	5,450	5,920	4,740	—
	HGLTV5.37 H=20		•		✓	5⅜	7½ to 32½	6	2⅞	(18) 0.162 x 3½	(6) 0.162 x 3½	1,120	10,585	9,485	9,500	7,805	6,770	—
	EGQ5.37-SDS H=20		•			5⅜	11¼ to 32	6	3	(28) ¼ x 3 SDS	(12) ¼ x 3 SDS	7,670	19,800	18,680	19,800	17,085	12,915	—
5¼ x 22	HWPH5.37 H=22		•		✓	5⅜	6 to 32	3¼	2½	(12) 0.162 x 3½	(12) 0.148 x 1½	2,075	6,595	7,025	5,450	5,920	4,740	—
	HGLTV5.37X H=22		•		✓	5⅜	7½ to 32½	6	2⅞	(18) 0.162 x 3½	(6) 0.162 x 3½	1,120	10,585	9,485	9,500	7,805	6,770	—
	EGQ5.37-SDS H=22		•			5⅜	4 to 30	6	3	(28) ¼ x 3 SDS	(12) ¼ x 3 SDS	7,670	19,800	18,680	19,800	17,085	12,915	—
5¼ x 24	HWPH5.37 H=24		•		✓	5⅜	6 to 32	3¼	2½	(12) 0.162 x 3½	(12) 0.148 x 1½	2,075	6,595	7,025	5,450	5,920	4,740	—
	HGLTV5.37X H=24		•		✓	5⅜	7½ to 32½	6	2⅞	(18) 0.162 x 3½	(6) 0.162 x 3½	1,120	10,585	9,485	9,500	7,805	6,770	—
	EGQ5.37-SDS H=24		•			5⅜	11¼ to 32	6	3	(28) ¼ x 3 SDS	(12) ¼ x 3 SDS	7,670	19,800	18,680	19,800	17,085	12,915	—
5½ LAM	HB5.50X	•			✓	5½	8 to 33	3½	3	(22) 0.162 x 3½	(10) 0.162 x 3½	2,075	5,815	5,640	6,395	5,395	3,820	—
	HWP5.62	•			✓	5⅝	6 to 28	3	2½	(9) 0.162 x 3½	(12) 0.148 x 1½	1,560	3,995	4,500	4,350	3,955	3,955	—
	HWPH5.62	•			✓	5⅝	6 to 28	3¼	2½	(12) 0.162 x 3½	(12) 0.148 x 1½	2,075	6,595	7,025	5,450	5,920	4,740	—
	HGLTV6	•			✓	5⁹⁄₁₆	7½ to 32	6	2⅞	(18) 0.162 x 3½	(6) 0.162 x 3½	1,120	10,585	9,485	9,500	7,805	6,770	—
	HGLT6	•			—	5⁹⁄₁₆	7½ to 32	6	2½	(18) N54A	(6) N54A	2,450	—	—	—	10,720	—	—
	EGQ5.62-SDS	•				5⅝	11¼ to 32	6	3	(28) ¼ x 3 SDS	(12) ¼ x 3 SDS	7,670	19,800	18,680	19,800	17,085	12,915	—
6¾ LAM	HB6.88X	•	•	•	✓	6⅞	8 to 33	3½	3	(22) 0.162 x 3½	(10) 0.162 x 3½	2,075	5,815	5,640	6,395	5,395	3,820	—
	HWPH6.88	•	•	•	✓	6⅞	6 to 28	3¼	2½	(12) 0.162 x 3½	(12) 0.148 x 1½	2,075	6,595	7,025	5,450	5,920	4,740	—
	HGLTV7	•	•	•	✓	6⅞	7½ to 31½	6	2⅞	(18) 0.162 x 3½	(6) 0.162 x 3½	1,120	10,585	9,485	9,500	7,805	6,770	—
	HGLT7	•			—	6⅞	7½ to 32	6	2½	(18) N54A	(6) N54A	2,450	—	—	—	10,720	—	—
	HGLS7	•				6⅞	7½ to 32½	6	SPEC	(28) N54A	(16) N54A	2,265	—	—	—	13,850	—	—
	EGQ6.88-SDS	•	•			6⅞	11¼ to 32	6	3	(28) ¼ x 3 SDS	(12) ¼ x 3 SDS	7,670	19,800	18,680	19,800	17,085	12,915	—

See footnotes on p. 184.

C-C-2021 ©2021 SIMPSON STRONG-TIE COMPANY INC.

Top-Flange Hangers – I-Joists, Glulam and SCL

Actual Joist Size (in.)	Model No.	Joist Types				Dimensions (in.)				Fasteners (in.)		Allowable Loads Header Type						
		Glulam	SCL	I-Joist	Web Stiff Reqd.[7]	W	H	B	TF	Header	Joist	Uplift (160)	LVL	PSL	LSL	DF/SP	SPF/HF	DF/SCL I-Joist[4]
7x SCL	HB7.12X		•	•	✓	7⅛	8 to 33	3½	3	(22) 0.162 x 3½	(10) 0.162 x 3½	2,075	5,815	5,640	6,395	5,395	3,820	—
	HWP7.12		•	•	✓	7⅛	6 to 28	3	2½	(9) 0.162 x 3½	(12) 0.148 x 1½	1,560	3,995	4,500	4,350	3,955	3,955	—
	HWPH712		•	•	✓	7⅛	6 to 28	3¼	2½	(12) 0.162 x 3½	(12) 0.148 x 1½	2,075	6,595	7,025	5,450	5,920	4,740	—
	HGLTV7		•	•	✓	7⅛	7½ to 31½	6	2⅞	(18) 0.162 x 3½	(6) 0.162 x 3½	1,120	10,585	9,485	9,500	7,805	6,770	—
	EGQ7.25-SDS		•			7⅛	11¼ to 32	6	3	(28) ¼ x 3 SDS	(12) ¼ x 3 SDS	7,670	19,800	18,680	19,800	17,085	12,915	—
Double 3½ x 9½	HB7.12/9.5			•	✓	7⅛	9½	3½	3	(22) 0.162 x 3½	(10) 0.162 x 3½	2,075	5,815	5,640	6,395	5,395	3,820	—
	HWP7.12 H=9.5			•	✓	7⅛	6 to 28	3	2½	(9) 0.162 x 3½	(10) 0.148 x 1½	1,560	3,995	4,500	4,350	3,955	3,955	—
Double 3½ x 11⅞	HB7.12/11.88			•	✓	7⅛	11⅞	3½	3	(22) 0.162 x 3½	(10) 0.162 x 3½	2,075	5,815	5,640	6,395	5,395	3,820	—
	HWP7.12 H=11.875			•	✓	7⅛	6 to 28	3	2½	(9) 0.162 x 3½	(10) 0.148 x 1½	1,560	3,995	4,500	4,350	3,955	3,955	—
Double 3½ x 14	HB7.12/14			•	✓	7⅛	14	3½	3	(22) 0.162 x 3½	(10) 0.162 x 3½	2,075	5,815	5,640	6,395	5,395	3,820	—
	HWP7.12 H=14			•	✓	7⅛	6 to 28	3	2½	(9) 0.162 x 3½	(10) 0.148 x 1½	1,535	3,995	4,500	4,350	3,955	3,955	—
Double 3½ x 16	HB7.12/16			•	✓	7⅛	16	3½	3	(22) 0.162 x 3½	(10) 0.162 x 3½	2,075	5,815	5,640	6,395	5,395	3,820	—
	HWP7.12 H=16			•	✓	7⅛	6 to 28	3	2½	(9) 0.162 x 3½	(12) 0.148 x 1½	1,560	3,995	4,500	4,350	3,955	3,955	—
Double 3½ x 18	HB7.12/18			•	✓	7⅛	18	3½	3	(22) 0.162 x 3½	(10) 0.162 x 3½	2,075	5,815	5,640	6,395	5,395	3,820	—
	HWP7.12 H=18			•	✓	7⅛	6 to 28	3	2½	(9) 0.162 x 3½	(12) 0.148 x 1½	1,560	3,995	4,500	4,350	3,955	3,955	—
	HWPH7.12 H=18			•	✓	7⅛	6 to 32	3¼	2½	(12) 0.162 x 3½	(12) 0.148 x 1½	2,075	6,595	7,025	5,450	5,920	4,740	—
Double 3½ x 20	HB7.12/20			•	✓	7⅛	20	3½	3	(22) 0.162 x 3½	(10) 0.162 x 3½	2,075	5,815	5,640	6,395	5,395	3,820	—
	HWP7.12 H=20			•	✓	7⅛	6 to 28	3	2½	(9) 0.162 x 3½	(12) 0.148 x 1½	1,560	3,995	4,500	4,350	3,955	3,955	—
	HWPH7.12 H=20			•	✓	7⅛	6 to 32	3¼	2½	(12) 0.162 x 3½	(12) 0.148 x 1½	2,075	6,595	7,025	5,450	5,920	4,740	—
Double 3½ x 22	HB7.12/22			•	✓	7⅛	22	3½	3	(22) 0.162 x 3½	(10) 0.162 x 3½	2,075	5,815	5,640	6,395	5,395	3,820	—
	HWP7.12 H=22			•	✓	7⅛	6 to 28	3	2½	(9) 0.162 x 3½	(12) 0.148 x 1½	1,560	3,995	4,500	4,350	3,955	3,955	—
	HWPH7.12 H=22			•	✓	7⅛	6 to 32	3¼	2½	(12) 0.162 x 3½	(12) 0.148 x 1½	2,075	6,595	7,025	5,450	5,920	4,740	—
	HGLTV7.12/22			•	✓	7⅛	22	6	2⅞	(18) 0.162 x 3½	(6) 0.162 x 3½	1,120	10,585	9,485	9,500	7,805	6,770	—
Double 3½ x 24	HB7.12/24			•	✓	7⅛	24	3½	3	(22) 0.162 x 3½	(10) 0.162 x 3½	2,075	5,815	5,640	6,395	5,395	3,820	—
	HWP7.12 H=24			•	✓	7⅛	6 to 28	3	2½	(9) 0.162 x 3½	(12) 0.148 x 1½	1,560	3,995	4,500	4,350	3,955	3,955	—
	HWPH7.12 H=24			•	✓	7⅛	6 to 32	3¼	2½	(12) 0.162 x 3½	(12) 0.148 x 1½	2,075	6,595	7,025	5,450	5,920	4,740	—
	HGLTV7.12/24			•	✓	7⅛	24	6	2⅞	(18) 0.162 x 3½	(6) 0.162 x 3½	1,120	10,585	9,485	9,500	7,805	6,770	—
Double 3½ x 26	HB7.12/26			•	✓	7⅛	26	3½	3	(22) 0.162 x 3½	(10) 0.162 x 3½	2,075	5,815	5,640	6,395	5,395	3,820	—
	HWP7.12 H=26			•	✓	7⅛	6 to 28	3	2½	(9) 0.162 x 3½	(12) 0.148 x 1½	1,560	3,995	4,500	4,350	3,955	3,955	—
	HWPH7.12 H=26			•	✓	7⅛	6 to 32	3¼	2½	(12) 0.162 x 3½	(12) 0.148 x 1½	2,075	6,595	7,025	5,450	5,920	4,740	—
	HGLTV426-2			•	✓	7⅛	26	6	2⅞	(18) 0.162 x 3½	(6) 0.162 x 3½	1,120	10,585	9,485	9,500	7,805	6,770	—
Double 3½ x 28	HB7.12/28			•	✓	7⅛	28	3½	3	(22) 0.162 x 3½	(10) 0.162 x 3½	2,075	5,815	5,640	6,395	5,395	3,820	—
	HWP7.12 H=28			•	✓	7⅛	6 to 28	3	2½	(9) 0.162 x 3½	(12) 0.148 x 1½	1,560	3,995	4,500	4,350	3,955	3,955	—
	HWPH7.12 H=28			•	✓	7⅛	6 to 32	3¼	2½	(12) 0.162 x 3½	(12) 0.148 x 1½	2,075	6,595	7,025	5,450	5,920	4,740	—
	HGLTV428-2			•	✓	7⅛	28	6	2⅞	(18) 0.162 x 3½	(6) 0.162 x 3½	1,120	10,585	9,485	9,500	7,805	6,770	—
Double 3½ x 30	HWPH7.12 H=30			•	✓	7⅛	6 to 32	3¼	2½	(12) 0.162 x 3½	(12) 0.148 x 1½	2,075	6,595	7,025	5,450	5,920	4,740	—
	HGLTV430-2			•	✓	7⅛	30	6	2⅞	(18) 0.162 x 3½	(6) 0.162 x 3½	1,120	10,585	9,485	9,500	7,805	6,770	—
8¾ LAM	HGLT9	•				8⅞	7½ to 30½	6	2½	(18) N54A	(6) N54A	2,450	—	—	—	10,720	—	—
	HGLS9	•				8⅞	7½ to 30½	6	SPEC	(28) N54A	(16) N54A	2,265	—	—	—	13,850	—	—

1. Loads may not be increased for duration of load.
2. Uplift loads have been increased for earthquake or wind loading with no further increase allowed. Reduce where other loads govern.
3. Uplift loads are based on DF/SP lumber. For SPF/HF, use 0.86 x DF/SP uplift load.
4. When an I-joist is used as header, all nails must be 0.148" x 1½", and allowable loads assume flanges that are at least 1½" thick and made of Douglas fir, LVL, or LSL. For other flange thicknesses, apply load adjustment factors found in the table below.
5. Hangers sorted in order of recommended selection for best overall performance and installation value.
6. Other nail schedules and loads are listed on product pages.
7. Web stiffeners are required where noted, when hanger is sloped or skewed, and when it supports double I-joists with flanges lesthan 1 5⁄16" thick in hangers that are 14 gauge and thinner.
8. HGLS saddle hanger allowable loads are for each stirrup. Joist fasteners listed are for one side only. Fasteners are provided for both sides of the saddle.
9. **Fasteners:** Nail dimensions are listed diameter by length. SDS screws are Simpson Strong-Tie® Strong-Drive® SDS Heavy-Duty Connector screws. See pp. 21–22 for fastener information.

I-Joist Header Load Adjustment Factors

Flange Material or Thickness	Hanger Series				
	ITS	MIT	LBV	WP	BA
1⅛" to 1¼"	0.75	0.75	0.75	0.75	0.75
1 5⁄16" to 1⅜"	0.85	0.85	0.85	0.85	0.85
SPF	0.86	0.72	0.90	1.00	1.00

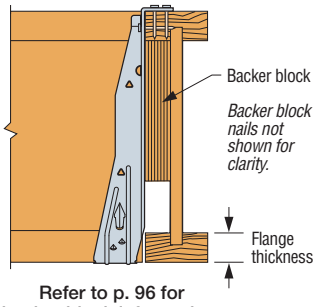

Refer to p. 96 for backer block information.

C-C-2021 ©2021 SIMPSON STRONG-TIE COMPANY INC.

VB

Knee Brace

The VB provides lateral resistance force at the bottom of beams when installed approximately 45° or more to the vertical plane.

Material: 12 gauge

Finish: Galvanized

Installation:

- Use specified fasteners; see General Notes
- 16-N54A fasteners are included with the brace

Codes: See p. 11 for Code Reference Key Chart

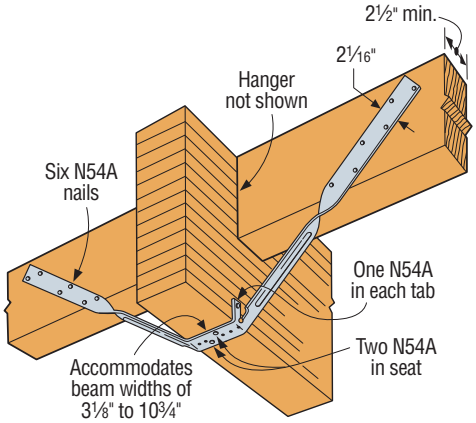

Typical VB Installation

Model No.	H (Beam Depth) (in.)	L (ft.)	Fasteners (Total)	Allowable Tension Loads			Code Ref.
				Floor (100)	Roof (125)	Roof (160)	
VB5	10 – 15	5	(16) N54A	1,195	1,440	1,790	IBC, LA
VB7	15 – 22½	7	(16) N54A	1,195	1,440	1,790	
VB8	22½ – 28½	8	(16) N54A	1,195	1,440	1,790	
VB10	28½ – 36	10	(16) N54A	1,195	1,440	1,790	
VB12	36 – 42	12	(16) N54A	1,195	1,440	1,790	

1. **Fasteners:** See pp. 21–22 for fastener information.

C-C-2021 ©2021 SIMPSON STRONG-TIE COMPANY INC.

HCA

Hinge Connectors

Hinge connectors are designed to transfer loads between two beams aligned end-to-end through a combination of bearing plates, side plates and bolts. In addition to supporting vertical loads, hinge connectors can also be specified with additional slotted bolt holes to resist horizontal loads as part of a continuous load path.

Material: Side plates — 7 gauge; top and bottom plates — see PT dimensions in table

Finish: Simpson Strong-Tie gray paint

Installation: • Use all specified fasteners; see General Notes

- Bolt holes shall be a minimum of 1⁄32" and a maximum of 1⁄16" larger than the bolt diameter (per 2015 NDS 12.1.2.2)
- The model size (suffix) column in the Allowable Download table gives the basic HCA model with two rotation bolts
- Contact Simpson Strong-Tie for heights greater than 60"
- Position ¾"-diameter bolts in slots away from bearing seat to allow for wood shrinkage
- For retrofit hinge connector strap applications, see **strongtie.com**.

Options: • The Horizontal Load table gives other bolt options

Ordering: • To order, add the width (W) and bearing plate size (PD) designation after the model name. Specify the H dimension.

- For dapped beams, reduce the H dimension by the PT dimension for each dap. See **strongtie.com/dap**.
- Specify model no., model size, and height H. Ordering example: HC4C3TA5-6 H = 18".

Codes: See p. 11 for Code Reference Key Chart

Model No. (Prefix)	Dimensions (in.)			Rotation Bolts per Beam	Slotted Tension Bolts	Allowable Horizontal Loads[2,3]
	L	H_3 Min.	H Max.			(160)
HCA	19½	8	60	2	—	—
HCCTA	19½	14	60	2	3	14,850
HC3A	25½	8	60	3	—	—
HC4C3TA	25½	14	60	3	4	19,720

1. Loads have been increased for wind or earthquake loading, with no further increase allowed. Reduce where other loads govern.
2. Horizontal loads are for Douglas fir–larch glulams with minimum W = 3⅛". For other wood types, adjust the load according to the code.
3. H min. is the absolute minimum height. Reduce downloads according to footnote 1 in the Allowable Download table.

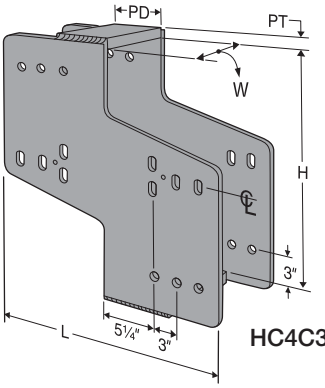

HC4C3TA

Subtract PT dimension from H dimension if beam is dapped.

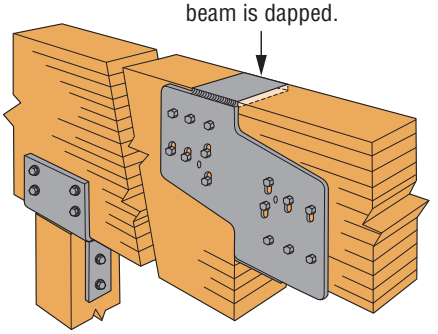

HC4C3TA
Top of carrying beam dapped the PT thickness for flush installation

Allowable Download Table

Model Size (Suffix)	Dimensions (in.)				Bolt Dia. (in.)	Two Rotation Bolts per Beam				Three Rotation Bolts per Beam				Code Ref.
	Beam Width	W	PT	PD		H_1	H_1 Allowable Roof Loads	Min. H	Min. H Allowable Roof Loads	H_1	H_1 Allowable Roof Loads	Min. H	Min. H Allowable Roof Loads	
3-5	3⅛	3¼	¾	5	¾	12	8,750	8	3,070	10	8,750	8	4,465	—
3-7	3⅛	3¼	¾	7	¾	18	12,250	15	9,240	14	12,250	12	9,235	
5-5	5⅛	5¼	¾	5	¾	16	14,350	8	3,100	13	14,350	8	4,560	IBC, LA
5-7	5⅛	5¼	¾	7	¾	25	20,090	20	14,835	19	20,090	16	15,505	
5-9	5⅛	5¼	¾	9	¾	36	25,830	25	16,365	27	25,830	19	16,030	
5.62-5	5½	5⅝	¾	5	¾	18	17,190	8	3,100	14	17,190	8	4,640	
5.62-7	5½	5⅝	¾	7	¾	28	24,065	19	14,495	21	24,065	15	15,020	
7-5	6¾	6⅞	1	5	¾	19	18,900	8	3,100	15	18,900	8	4,605	
7-7	6¾	6⅞	1	7	¾	30	26,460	24	19,850	22	26,460	18	19,845	
7-9	6¾	6⅞	1	9	¾	40	29,615	30	20,905	33	34,020	22	20,190	
9-5	8¾	8⅞	1¼	5	¾	22	24,500	8	3,100	17	24,500	8	4,605	
9-7	8¾	8⅞	1¼	7	¾	37	34,300	29	25,455	27	34,300	22	26,145	
9-9	8¾	8⅞	1¼	9	¾	40	29,615	37	27,000	40	43,975	27	27,160	
11-5	10¾	10⅞	1½	5	¾	26	30,100	8	3,100	20	30,100	8	4,605	
11-7	10¾	10⅞	1½	7	¾	40	37,925	34	31,230	32	42,140	25	30,815	
11-9	10¾	10⅞	1½	9	¾	40	29,615	40	29,615	40	43,975	32	33,630	
3.62-5	3½	3⅝	¾	5	¾	15	13,125	8	3,100	12	13,125	8	4,625	—
3.62-9	3½	3⅝	¾	9	¾	34	23,625	16	8,710	25	23,625	13	9,125	
5.37-5	5¼	5⅜	1	5	¾	19	19,690	8	3,100	15	19,690	8	4,640	
5.37-9	5¼	5⅜	1	9	¾	40	29,605	20	12,190	34	35,440	16	13,040	
7.12-5	7	7⅛	1¼	5	¾	23	26,250	8	3,100	18	26,250	8	4,635	
7.12-9	7	7⅛	1¼	9	¾	40	29,600	24	15,670	40	44,330	19	16,950	

1. Allowable loads have been increased for wind or earthquake loading with no further increase allowed. Reduce where other loads govern.
2. Loads are based on 560 psi perpendicular-to-grain bearing stress.
3. H_1 is the minimum dimension required to achieve full load for the hinge connector. For H dimensions between H_1 and Minimum H, loads may be linearly interpolated.
4. See Horizontal Load table for models available with three rotation bolts.
5. Beams must be the same width for both members in the connection.

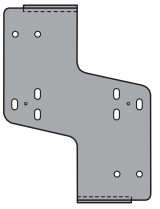

HCCTA

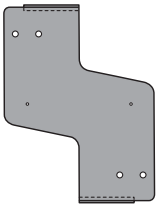

HCA

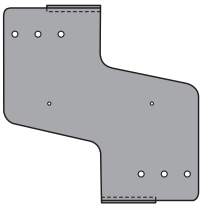

HC3A

C-C-2021 ©2021 SIMPSON STRONG-TIE COMPANY INC.

GLB/HGLB

Beam Seats

The GLB series provides a connection between beam and concrete or CMU pilaster.

Finish: Simpson Strong-Tie gray paint. Hot-dip galvanized available; specify HDG.

Installation:

- Use all specified fasteners; see General Notes
- Bolt holes in wood shall be a minimum of 1⁄32" to a maximum of 1⁄16" larger than the bolt diameter (per the 2015 NDS, section 11.1.3.2)
- Check the rebar spacing requirements on all installations

Options:

- Beam seats for sawn timber and other sizes may be ordered by specifying special dimensions; use the letter designations shown on the illustrations
- Specify if two-bolt GLB model is desired; see illustration

Codes: See p. 11 for Code Reference Key Chart

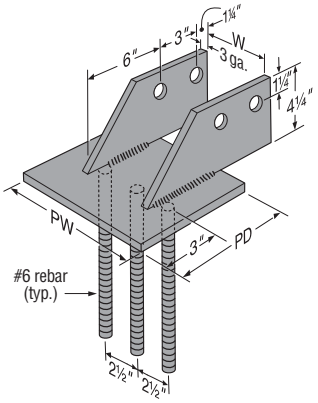

HGLB

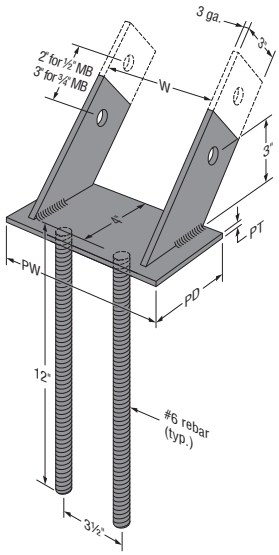

GLB

These products are available with additional corrosion protection. For more information, see p. 14.

Model No.	Dimensions (in.)				Bolts	Allowable Bearing Loads		Code Ref.
	W	PD	PW	PT		Masonry @ 375 psi	Wood Bearing	
GLB5A	5¼	5	7	3 ga.	(1) ½	13,125	16,655	IBC, FL, LA
GLB5B	5¼	6	7	⅜	(1) ½	15,750	19,990	
GLB5C	5¼	7	7	⅜	(1) ½	18,375	23,320	
GLB5D	5¼	8	7	⅜	(1) ½	21,000	26,650	
GLB7A	6⅞	5	9	3 ga.	(1) ¾	16,875	21,940	
GLB7B	6⅞	6	9	⅜	(1) ¾	20,250	26,325	
GLB7C	6⅞	7	9	⅜	(1) ¾	23,625	30,715	
GLB7D	6⅞	8	9	⅜	(1) ¾	27,000	35,100	

See footnotes below.

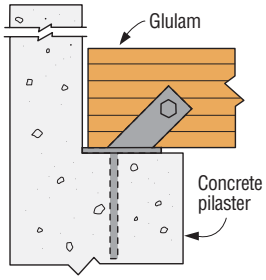

Typical GLB Installation

Model No.	Dimensions (in.)				Bolts (Qty.– Dia.)	Allowable Bearing Loads						Allowable Horizontal Bolt Loads	Code Ref.
	Width for Beam (W)	Bearing Plate				Masonry Bearing @ 375 psi	Wood Bearing						
		Depth PD	Width PW	Thickness PT			Glulam Beam Width (in.)						
							3⅛	5⅛	6¾	8¾	10¾		
HGLBA	3¼ to 9	5	10	⅜	(2) ¾	18,750	10,155	16,655	21,940	28,440	—	10,305	IBC, FL, LA
HGLBB		6	10	⅜	(2) ¾	22,500	12,190	19,990	26,325	34,125	—	10,305	
HGLBC		7	10	⅜	(2) ¾	26,250	14,220	23,320	30,715	39,815	—	10,305	
HGLBD		8	10	⅜	(2) ¾	30,000	16,250	26,650	35,100	45,500	—	10,305	

1. Allowable bearing stress for masonry is based on an f'_c of 1,500 psi using the IBC (ACI 530) Allowable Stress Design. Wood bearing is based on an $F_{c\perp}$ of 650 psi.
2. When installing on masonry, use the lesser of the masonry or the wood allowable load values. When installing on concrete, use a minimum f'_c = 2,500 psi and use the wood values as the limiting allowable bearing load values.
3. Allowable horizontal loads are bolt values and include increase for wind or earthquake loading. Loads must be reduced if stresses in masonry or concrete are limiting.
4. Beams must fully bear on base plate.
5. Specify "W" dimension when ordering.
6. Uplift loads do not apply for this connector.

C-C-2021 ©2021 SIMPSON STRONG-TIE COMPANY INC.

Code-listed fasteners. Concrete-anchoring adhesives. Concealed connectors, brackets and splines. Simpson Strong-Tie® mass timber structural solutions give you maximum strength and design flexibility. With our team of expert engineers, ongoing technical support and a nationwide supply network that delivers exactly what you need, when you need it — you can be sure that your mass timber projects are stronger, faster and easier than ever.

To learn more about our innovative solutions, see our Connectors & Fasteners for Mass Timber Construction catalog at **strongtie.com/masstimber**.

SIMPSON
Strong-Tie®

CBH Concealed Beam Hanger

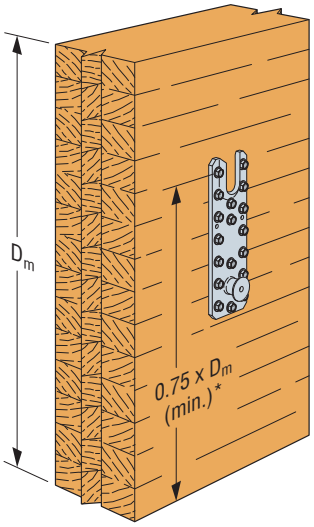

Carrying Member

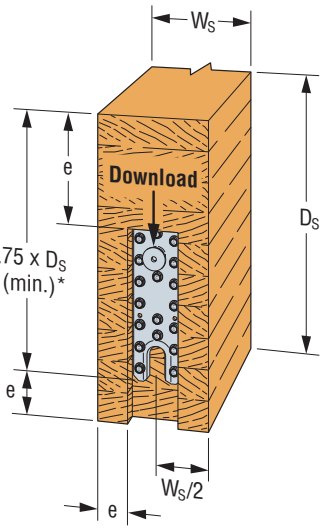

Carried Member

* Dimension line is to bottom of CBH

CBH Placement Relative to Member Depth/Width

Reference Simpson Strong-Tie engineering letter L-C-CBHEDGE and L-C-CBHCHAR at **strongtie.com** for additional guidance on edge distances and minimum carried member sizes.

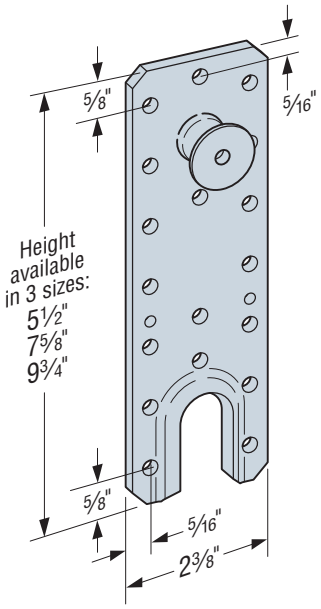

CBH2.37x7.63
(CBH2.37x5.5, CBH2.37x9.75 similar)

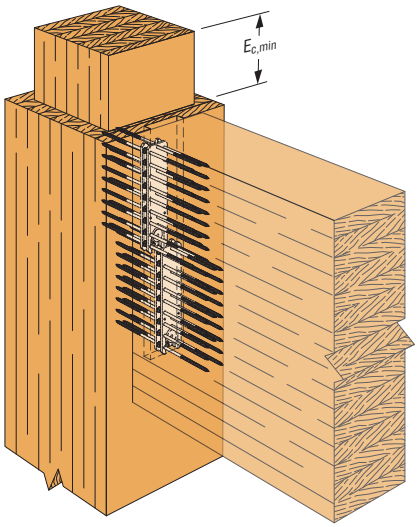

*Reference Simpson Strong-Tie engineering letter L-C-CBHDRIFT at **strongtie.com** for guidance on CBH drift behavior at columns and $E_{c,min}$ requirement.

Typical Double CBH2.37x7.63 Installation at Column
(CBH2.37x5.5 and CBH2.37x9.5 and installation at girder similar)

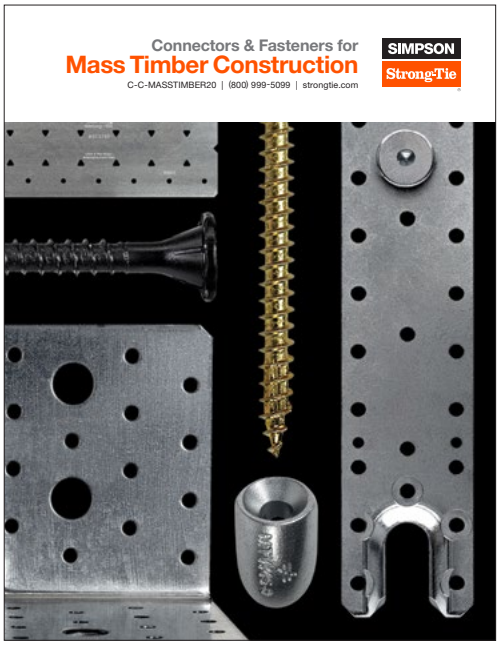

For more information about mass timber connectors and fasteners, see C-C-MASSTIMBER catalog at **strongtie.com**. Additional mass timber fasteners are on p. 343.

C-C-2021 ©2021 SIMPSON STRONG-TIE COMPANY INC.

Diaphragm Surface Spline

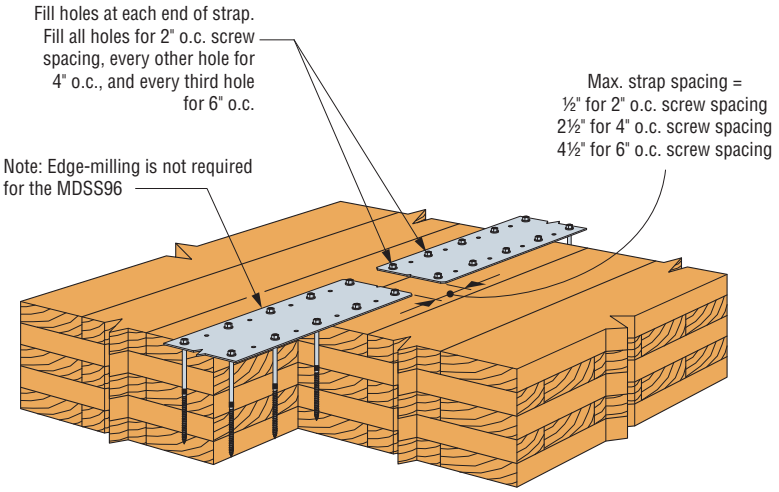

Typical MDSS96 Installation with ¼" x 6" SDS Heavy-Duty Connector Screws at 4" o.c. in a Five-Ply CLT Panel

(2" o.c and 6" o.c SDS screw spacing options similar; three-ply application similar)

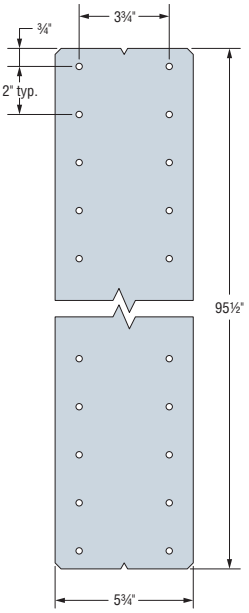

MDSS96

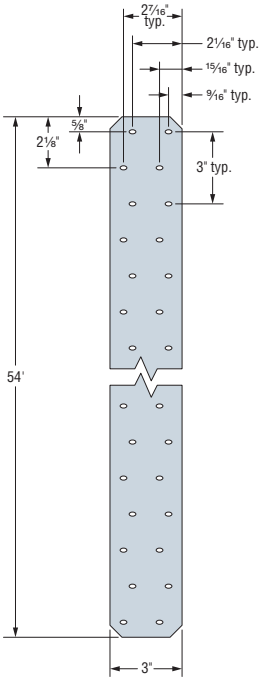

CMSTC16

Tension Straps for Cross-Laminated Timber

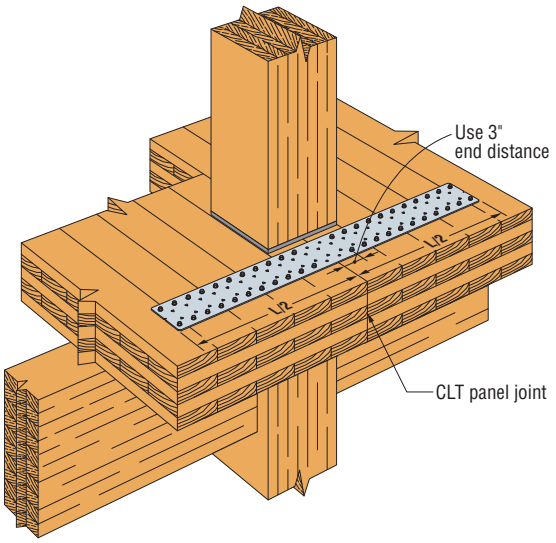

Typical MDCST48 Installation for Diaphragm Chord Tension Across a Five-Ply CLT Panel Joint

(three-ply and seven-ply CLT similar; other strap options similar)

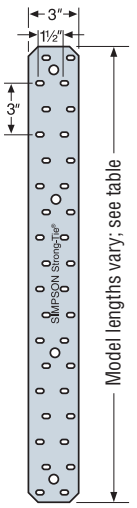

MSTC

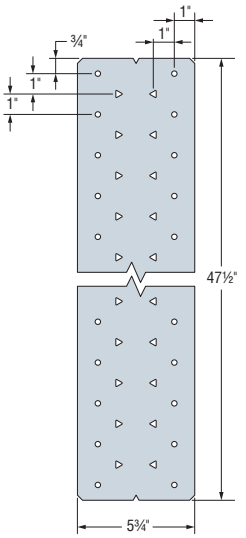

MDCST48

For more information about mass timber applications and loads, visit **strongtie.com/masstimber**.

C-C-2021 ©2021 SIMPSON STRONG-TIE COMPANY INC.

Angle Brackets for Cross-Laminated Timber

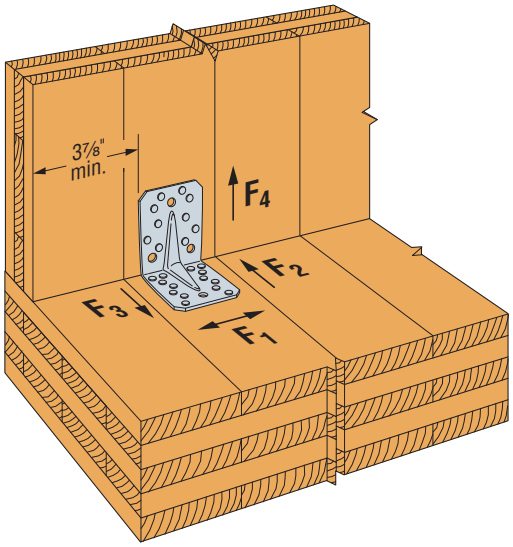

Typical ABR105 Installation to CLT Floor
(AE116, ABR9020, ABR255 similar)

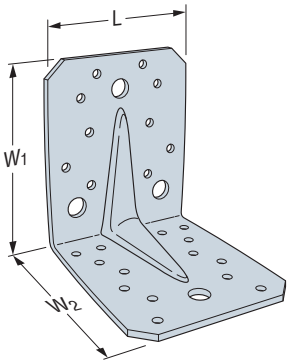

ABR105

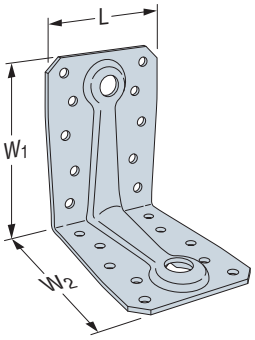

ABR9020

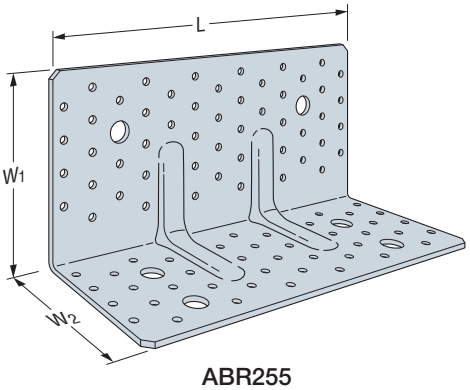

ABR255

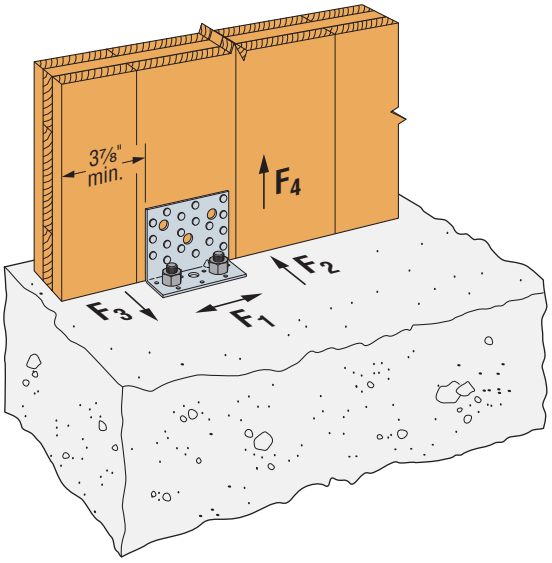

Typical AE116 Installation to Concrete Slab

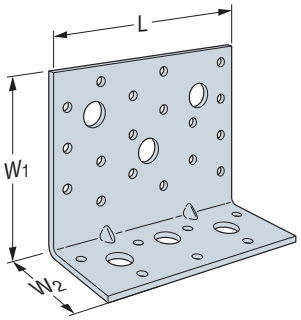

AE116

For more information about mass timber applications and loads, visit **strongtie.com/masstimber**.

C-C-2021 ©2021 SIMPSON STRONG-TIE COMPANY INC.

THA/THAC

Adjustable Truss Hangers

This product is preferable to similar connectors because of (a) easier installation, (b) higher loads, (c) lower installed cost, or a combination of these features.

The THA series have extra long straps that can be field-formed to give height adjustability and top-flange hanger convenience. THA hangers can be installed as top-flange or face-mount hangers.

THA4x and THA2x-2 models feature a dense nail pattern in the straps, which provides more installation options and allows for easy top-flange installation.

Material: See table

Finish: Galvanized. Some products available in ZMAX® coating. See Corrosion Information, pp. 12–15.

Installation:

- Use all specified fasteners; see General Notes.

The following installation methods may be used:

- **Top-Flange Installation** — The straps must be field formed over the header 2" minimum (2⁷⁄₁₆" for the THA29). Install top and face nails according to the table. Top nails shall not be within ¼" from the edge of the top-flange members. For all top-flange (max.) conditions, nails used for joist attachment must be driven at an angle so that they penetrate through the joist and into the header. For top-flange (min.) installations (not applicable to the THA29), straighten the double-shear nailing tabs and install the nails straight into the joist. Top-flange (max.) installations require full backing to allow for joist slanted fasteners to be properly installed.
- **Face-Mount (Min.) Installation** — Install face nails according to the table, with at least half of the required fasteners in the top half of the header. Not all nail holes in the straps will be filled. Nails must have a minimum ½" edge distance. Straighten the double-shear nailing tabs and install the joist nails straight into the joist. The face-mount (min.) installation option accommodates conditions where the supported member hangs either partially or entirely below the header.
- **Face-Mount (Max.) Installation** — Install face nails according to the table. Not all nail holes in the straps will be filled except for the following models: THA29, THA213, THA218 and THA413. For all other models with more nail holes than required, the straps may be installed straight or wrapped over the header, with the tabulated quantity of face nails installed into the face and top of the header. The lowest four face holes must be filled. Nails used for the joist attachment must be driven at an angle so that they penetrate through the corner of the joist into the header.
- **Uplift** — Lowest face nails must be filled to achieve uplift loads.

Options:

- THA hangers available with the header flanges turned in for 3⅝" (except THA413) and larger, with no load reduction — order THAC hanger.

Codes: See p. 11 for Code Reference Key Chart

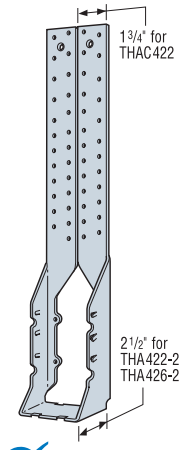

THAC422

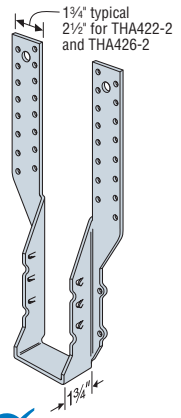

THA418

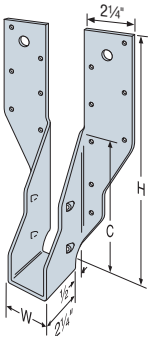

THA29

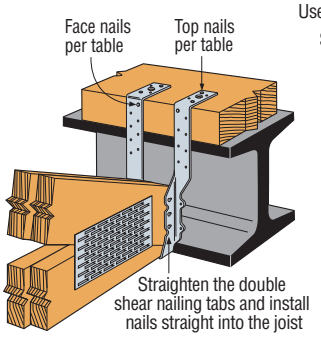

Typical THA Top Flange (Min.) Installation on a Nailer
(except THA29)

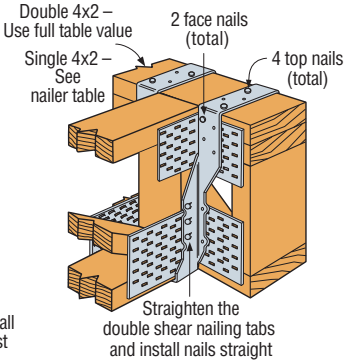

Typical THA422 Top Flange (Min.) Installation on a 4x2 Floor Truss

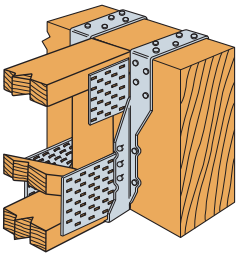

THA422 Face-Mount (Max.) Installation
Straps may be installed straight or wrapped over with tabulated face nails installed into top and face of header.

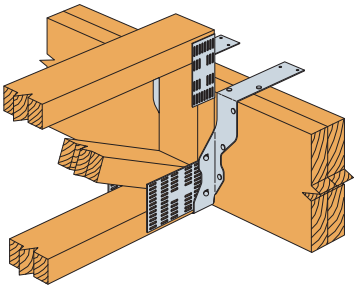

THA413 Top Flange (Max.) Installation

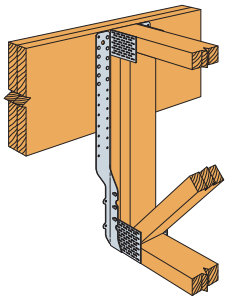

THA422 Face-Mount (Min.) Installation

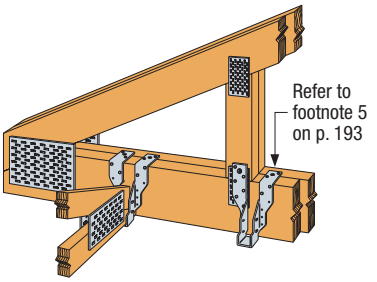

Typical THA29 Top Flange Installation

Double-Shear Nailing Top View

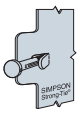

Double-Shear Nailing Side View; Do not bend tab

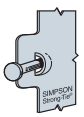

Dome Double-Shear Nailing Side View *(Available on some models)*

C-C-2021 ©2021 SIMPSON STRONG-TIE COMPANY INC.

Adjustable Truss Hangers (cont.)

These products are available with additional corrosion protection. For more information, see p. 14.

Model No.	Ga.	Dimensions (in.) W	Dimensions (in.) H	Dimensions (in.) C	Min. Header Depth (in.)	Fasteners (in.) Carrying Member Top	Fasteners (in.) Carrying Member Face	Fasteners (in.) Carried Member	DF/SP Allowable Loads Uplift (160)	DF/SP Floor (100)	DF/SP Snow (115)	DF/SP Roof (125)	DF/SP Wind (160)	SPF/HF Allowable Loads Uplift (160)	SPF/HF Floor (100)	SPF/HF Snow (115)	SPF/HF Roof (125)	SPF/HF Wind (160)	Code Ref.
Top-Flange Installation[3]																			
THA29 Max.	18	1⅝	9 11/16	5⅛	5½	(4) 0.148 x 3	(6) 0.148 x 3	(4) 0.148 x 3	465	2,560	2,560	2,560	2,560	405	2,040	2,040	2,040	2,040	IBC, FL, LA
THA213 Min.	18	1⅝	13 5/16	5½	—	(4) 0.148 x 3	(2) 0.148 x 3	(4) 0.148 x 1½	—	1,430	1,430	1,430	1,430	—	1,170	1,170	1,170	1,170	
THA213 Max.					7⅞	(4) 0.148 x 3	(6) 0.148 x 3	(4) 0.148 x 3	855	2,090	2,090	2,090	2,090	750	1,620	1,620	1,620	1,620	
THA218 Min.	18	1⅝	17 3/16	5½	—	(4) 0.148 x 3	(2) 0.148 x 3	(4) 0.148 x 1½	—	1,430	1,430	1,430	1,430	—	1,170	1,170	1,170	1,170	
THA218 Max.					7⅞	(4) 0.148 x 3	(6) 0.148 x 3	(4) 0.148 x 3	855	2,090	2,090	2,090	2,090	750	1,620	1,620	1,620	1,620	
THA218-2 Min.	16	3⅛	17 11/16	8	—	(4) 0.162 x 3½	(2) 0.162 x 3½	(6) 0.148 x 3	—	2,245	2,245	2,245	2,245	—	1,835	1,835	1,835	1,835	
THA218-2 Max.					11¼	(4) 0.162 x 3½	(6) 0.162 x 3½	(6) 0.162 x 3½	1,855	3,670	3,670	3,670	3,670	1,670	2,790	2,790	2,790	2,790	
THA222-2 Min.	16	3⅛	22 3/16	8	—	(4) 0.162 x 3½	(2) 0.162 x 3½	(6) 0.148 x 3	—	2,245	2,245	2,245	2,245	—	1,835	1,835	1,835	1,835	
THA222-2 Max.					11¼	(4) 0.162 x 3½	(6) 0.162 x 3½	(6) 0.162 x 3½	1,855	3,670	3,670	3,670	3,670	1,615	2,790	2,790	2,790	2,790	
THA413 Min.	18	3⅝	13 5/16	4½	—	(4) 0.148 x 3	(2) 0.148 x 3	(4) 0.148 x 3	—	1,430	1,430	1,430	1,430	—	1,055	1,055	1,055	1,055	
THA413 Max.					7¼	(4) 0.148 x 3	(6) 0.148 x 3	(4) 0.148 x 3	855	2,090	2,090	2,090	2,090	750	1,620	1,620	1,620	1,620	
THA418 Min.	16	3⅝	17½	7⅞	—	(4) 0.162 x 3½	(2) 0.162 x 3½	(6) 0.148 x 3	—	2,245	2,245	2,245	2,245	—	1,835	1,835	1,835	1,835	
THA418 Max.					11¼	(4) 0.162 x 3½	(6) 0.162 x 3½	(6) 0.162 x 3½	1,855	3,670	3,670	3,670	3,670	1,670	2,790	2,790	2,790	2,790	
THA422 Min.	16	3⅝	22	7⅞	—	(4) 0.162 x 3½	(2) 0.162 x 3½	(6) 0.148 x 3	—	2,245	2,245	2,245	2,245	—	1,835	1,835	1,835	1,835	
THA422 Max.					11¼	(4) 0.162 x 3½	(6) 0.162 x 3½	(6) 0.162 x 3½	1,855	3,670	3,670	3,670	3,670	1,670	2,790	2,790	2,790	2,790	
THA426 Min.	14	3⅝	26	7⅞	—	(4) 0.162 x 3½	(4) 0.162 x 3½	(6) 0.162 x 3½	—	2,870	2,870	2,870	2,870	—	2,270	2,270	2,270	2,270	
THA426 Max.					11¼	(4) 0.162 x 3½	(6) 0.162 x 3½	(6) 0.162 x 3½	1,855	3,755	3,755	3,755	3,755	1,670	2,945	2,945	2,945	2,945	
THA422-2 Min.	14	7¼	22 11/16	9¾	—	(4) 0.162 x 3½	(4) 0.162 x 3½	(6) 0.162 x 3½	—	3,330	3,330	3,330	3,330	—	2,465	2,465	2,465	2,465	
THA422-2 Max.					11¼	(4) 0.162 x 3½	(8) 0.162 x 3½	(6) 0.162 x 3½	1,855	4,210	4,210	4,210	4,210	1,670	3,285	3,285	3,285	3,285	
THA426-2 Min.	14	7¼	26 1/16	9¾	—	(4) 0.162 x 3½	(4) 0.162 x 3½	(6) 0.162 x 3½	—	3,330	3,330	3,330	3,330	—	2,465	2,465	2,465	2,465	
THA426-2 Max.					11¼	(4) 0.162 x 3½	(8) 0.162 x 3½	(6) 0.162 x 3½	1,855	4,210	4,210	4,210	4,210	1,670	3,285	3,285	3,285	3,285	
Face-Mount (Max.) Installation[4]																			
THA29	18	1⅝	9 11/16	5⅛	9 11/16	—	(16) 0.148 x 3	(4) 0.148 x 3	465	2,295	2,305	2,305	2,305	405	1,965	2,250	2,250	2,250	IBC, FL, LA
THA213	18	1⅝	13 5/16	5½	13 5/16	—	(14) 0.148 x 3	(4) 0.148 x 3	855	2,060	2,210	2,210	2,210	750	1,760	2,020	2,145	2,145	
THA218	18	1⅝	17 3/16	5½	17 3/16	—	(18) 0.148 x 3	(4) 0.148 x 3	855	2,210	2,210	2,210	2,210	750	2,145	2,145	2,145	2,145	
THA218-2	16	3⅛	17 11/16	8	14 1/16	—	(22) 0.162 x 3½	(6) 0.162 x 3½	1,855	3,695	3,695	3,695	3,695	1,670	3,330	3,535	3,535	3,535	
THA222-2	16	3⅛	22 3/16	8	14 1/16	—	(22) 0.162 x 3½	(6) 0.162 x 3½	1,855	3,695	3,695	3,695	3,695	1,670	3,330	3,535	3,535	3,535	
THA413	18	3⅝	13 5/16	4½	13⅜	—	(14) 0.148 x 3	(4) 0.148 x 3	855	2,060	2,210	2,210	2,210	750	1,760	2,020	2,145	2,145	
THA418	16	3⅝	17½	7⅞	14 1/16	—	(22) 0.162 x 3½	(6) 0.162 x 3½	1,855	3,695	3,695	3,695	3,695	1,670	3,330	3,535	3,535	3,535	
THA422	16	3⅝	22	7⅞	14 1/16	—	(22) 0.162 x 3½	(6) 0.162 x 3½	1,855	3,695	3,695	3,695	3,695	1,670	3,330	3,535	3,535	3,535	
THA426	14	3⅝	26	7⅞	16 1/16	—	(30) 0.162 x 3½	(6) 0.162 x 3½	1,855	4,315	4,315	4,315	4,315	1,670	3,225	3,225	3,225	3,225	
THA422-2	14	7¼	22 11/16	9¾	16 3/16	—	(30) 0.162 x 3½	(6) 0.162 x 3½	1,855	5,170	5,520	5,520	5,520	1,670	4,440	5,010	5,010	5,010	
THA426-2	14	7¼	26 1/16	9¾	18	—	(38) 0.162 x 3½	(6) 0.162 x 3½	1,855	5,520	5,520	5,520	5,520	1,670	5,010	5,010	5,010	5,010	

1. Uplift loads have been increased for earthquake or wind loading with no further increase allowed. Reduce where other loads govern.
2. Wind (160) is a download rating.
3. Top flange Installation loads are based on a minimum two-ply 2x carrying member. For top flange (min.) installation on 4x2 truss carrying members with double top chords, use the specified fasteners for full tabulated values; for single 4x2 top chord or nailer applications, refer to the Nailer Table.
4. Face-mount installation loads are based on a two-ply 2x carrying member minimum. For single 2x carrying members, use 0.148" x 1½" nails in the carrying member and tabulated fasteners in the carried member, and use 0.80 of the table value for 18 gauge, and 0.68 of the table value for 16 gauge and 14 gauge.
5. For the THA 2x models, one strap may be installed vertically according to the face-mount nailing requirements and the other strap wrapped over the truss chord according to the top-flange (min.) nailing requirements (see drawing on p. 192) and achieve full tabulated top flange (min.) installation loads.
6. Refer to installation instructions regarding fastener installation into carried (joist) member. Based on the installation condition, nails will be installed either straight with straightened double-shear nailing tabs or slanted.
7. THA29 may be installed on a single 2x6 or 2x8 carrying member using (2) 0.148" x 3" top nails, (6) 0.148" x 3" face nails and (4) 0.148" x 3" slant nails with an allowable download of 2,020 lb. for DF/SP and 1,500 lb. for SPF/HF.
8. **Fasteners:** Nail dimensions are listed diameter by length. See pp. 21–22 for fastener information.

C-C-2021 ©2021 SIMPSON STRONG-TIE COMPANY INC.

THA/THAC

Adjustable Truss Hangers (cont.)

Nailer Table

Model No.	Nailer	Top Nailing (in.)	Face Nailing (in.)	Joist Nailing (in.)	Allowable Loads (100/115/125)	
					DF/SP	SPF/HF
THA218-2/ THA222-2	2x	(4) 0.148 x 1½	(2) 0.148 x 1½	(6) 0.148 x 1½	1,335	1,245
		(4) 0.148 x 1½	(2) 0.162 x 3½	(6) 0.162 x 3½	1,415	1,245
	(2) 2x	(4) 0.148 x 3	(2) 0.148 x 3	(6) 0.148 x 3	1,835	1,680
	4x	(4) 0.162 x 3½	(2) 0.162 x 3½	(6) 0.148 x 3	2,245	1,930
THA418/ THA422	2x	(4) 0.148 x 1½	(2) 0.148 x 1½	(6) 0.148 x 1½	1,335	1,245
		(4) 0.148 x 1½	(2) 0.162 x 3½	(6) 0.162 x 3½	1,415	1,245
	(2) 2x	(4) 0.148 x 3	(2) 0.148 x 3	(6) 0.148 x 3	1,835	1,680
	4x	(4) 0.162 x 3½	(2) 0.162 x 3½	(6) 0.148 x 3	2,245	1,930
THA426	2x	(4) 0.148 x 1½	(2) 0.148 x 1½	(6) 0.148 x 1½	1,785	1,360
		(4) 0.148 x 1½	(2) 0.162 x 3½	(6) 0.162 x 3½	2,255	1,940
	(2) 2x	(4) 0.148 x 3	(2) 0.148 x 3	(6) 0.148 x 3	1,835	1,680
	4x	(4) 0.162 x 3½	(4) 0.162 x 3½	(6) 0.162 x 3½	2,435	2,095
THA422-2/ THA426-2	2x	(4) 0.148 x 1½	(2) 0.148 x 1½	(6) 0.148 x 1½	1,375	1,325
		(8) 0.148 x 1½	(2) 0.162 x 3½	(6) 0.162 x 3½	2,345	2,015
	(2) 2x	(4) 0.148 x 3	(4) 0.148 x 3	(6) 0.148 x 3	1,970	1,970
	4x	(4) 0.162 x 3½	(4) 0.162 x 3½	(6) 0.162 x 3½	3,330	2,865

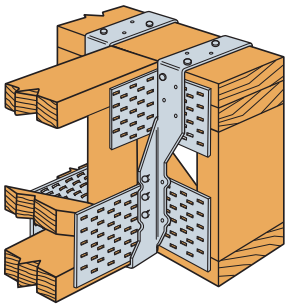

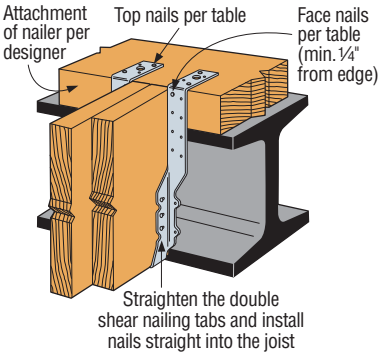

1. Loads for 2x Nailers are applicable to single 4x2 top chord carrying members provided: 1) the hanger is located at a top chord panel point; 2) there is no splice at that panel point location; 3) the floor truss girder must have adequate lateral bracing to prevent excessive displacement due to secondary torsional stresses (refer to ANSI/TPI 1-2014, Section 7.5.3.5).
2. Attachment of nailer to supporting member is the responsibility of the designer.
3. Refer to table on p. 193 for hanger dimensions, minimum top flange requirements and additional footnotes.

Allowable Loads for Face-Mount (Min.) Nailing Installation

Model No.	Ga.	Dimensions (in.)		Fasteners (in.)		Allowable Loads (lb.)					
						DF/SP			SPF/HF		
		W	H	Header (Face)[3]	Joist	Floor (100)	Snow (115)	Roof (125)	Floor (100)	Snow (115)	Roof (125)
THA213	18	1⅝	13 5/16	(10) 0.148 x 3	(4) 0.148 x 1½	1,180	1,200	1,200	1,020	1,160	1,200
THA218	18	1⅝	17 3/16	(10) 0.148 x 3	(4) 0.148 x 1½	1,180	1,200	1,200	1,020	1,160	1,200
THA218-2	16	3⅛	17 11/16	(20) 0.148 x 3	(6) 0.148 x 1½	2,440	2,485	2,485	2,100	2,140	2,140
THA222-2	16	3⅛	22 3/16	(20) 0.148 x 3	(6) 0.148 x 1½	2,440	2,485	2,485	2,100	2,140	2,140
THA413	18	3⅝	13 5/16	(10) 0.148 x 3	(4) 0.148 x 1½	1,180	1,200	1,200	1,020	1,160	1,200
THA418	16	3⅝	17½	(20) 0.148 x 3	(6) 0.148 x 1½	2,440	2,485	2,485	2,100	2,140	2,140
THA422	16	3⅝	22	(20) 0.148 x 3	(6) 0.148 x 1½	2,440	2,485	2,485	2,100	2,140	2,140
THA426	14	3⅝	26	(30) 0.148 x 3	(6) 0.148 x 1½	3,225	3,225	3,225	2,770	2,770	2,770

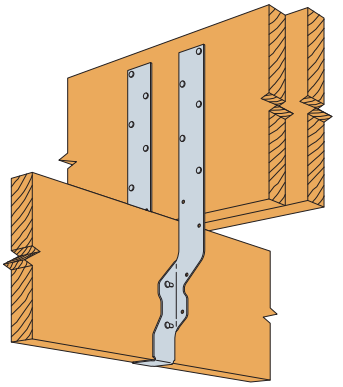

Typical THA Face-Mount Min. Nailing Installation for Supporting a Suspended Joist

1. Loads are based on a min. 2-ply 2x carrying member. 0.148" x 2½" nails may be used instead of the specified 10d commons at 1.00 of the table load. For single-ply 2x or 1¾" wide carrying members, use 0.148" x 1½" nails and use 0.77 of the table value. Alternately, #9 x1½" Strong-Drive® SD Connector screws may be used in place of the specified header and joist nails for full table loads.
2. The joist nails should be installed straight into the carried member by straightening the THA double shear nailing tabs. When used to support 2x4 joists, the THA213 or THA218 may be installed with (2) 0.148" x 1½" nails into the joist (one each side).
3. At least half of the face fasteners must be installed into the upper half of the header, unless some other means of mechanical reinforcement is used to resist the tension perpendicular to grain stresses. Nails must have a minimum ½" edge distance.
4. For installations with fewer face fasteners than specified, reduce the allowable load as follows: Allowable load = No. of Face Nails Used/No. Face Nails in Table x Table Load
5. **Fasteners:** Nail dimensions are listed diameter by length. SD screws are Simpson Strong-Tie® Strong-Drive SD Connector screws. See pp. 21–22 for fastener information.

C-C-2021 ©2021 SIMPSON STRONG-TIE COMPANY INC.

THAR/L422

Adjustable Skewed Truss Hanger

Designed for 4x2 floor trusses and 4x beams, the THAR/L422 has a standard skew of 45°. Straps must be bent for top flange installation. Positive-angle nailing (PAN) helps eliminate splitting of 4x2 truss bottom chords.

Material: 16 gauge

Finish: Galvanized

Installation:

- Use all specified fasteners; see General Notes
- Straps must be field-formed over the header a minimum of 2½"
- Minimum and maximum nailing configurations available — see table for nailing requirements

Codes: See p. 11 for Code Reference Key Chart

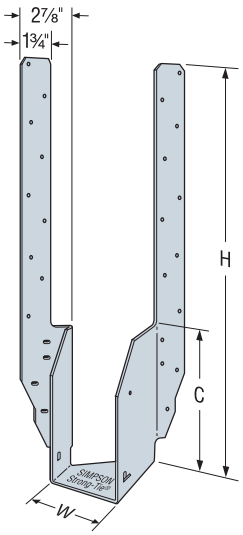

THAL422

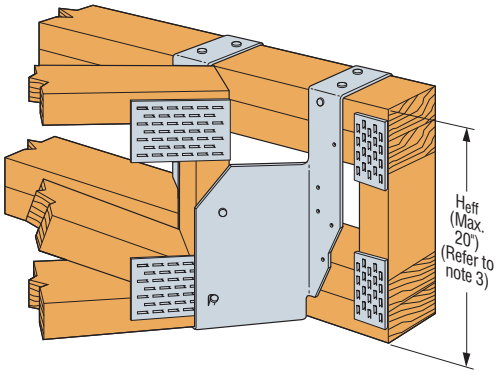

Typical THAL422 Installation with Minimum Nailing on a Floor Truss with Double 4x2 Top Chord

Model No.	Ga.	Dimensions (in.)			Min. Top Chord on Carrying Member	Effective Height Heff[3]	Fasteners (in.)				DF/SP Allowable Loads				SPF/HF Allowable Loads				Code Ref.
							Carrying Member		Carried Member		Uplift (160)	Floor (100)	Snow (115)	Roof (125)	Uplift (160)	Floor (100)	Snow (115)	Roof (125)	
		W	H	C			Top	Face	Straight	Slant									
THAR/L422 (Min.)	16	3⅝	22⅝	8	Single 4x2	9 min.	(4) 0.148 x 1½	(2) 0.148 x 1½	(1) 0.148 x 1½	(2) 0.148 x 1½	—	880	880	880	—	755	755	755	IBC, FL, LA
					Double 4x2	9 to 12	(4) 0.148 x 3	(2) 0.148 x 3	(1) 0.148 x 3	(2) 0.148 x 1½	—	1,525	1,525	1,525	—	1,315	1,315	1,315	
						> 12					—	1,090	1,090	1,090	—	935	935	935	
THAR/L422 (Max.)	16	3⅝	22⅝	8	Double 4x2	9 min.	(4) 0.148 x 3	(8) 0.148 x 3	(1) 0.148 x 3	(2) 0.148 x 1½	310	1,675	1,675	1,675	265	1,440	1,440	1,440	

1. Uplift loads have been increased for earthquake or wind loading with no further increase allowed. Reduce where other loads govern.
2. Roof loads are 125% of floor loads unless limited by other criteria. Floor loads may be adjusted for load durations according to the code provided they do not exceed those in the roof column.
3. Where the top of the carried member is flush with the top of the carrying member, H_{eff} is equal to the depth of the carried member. Otherwise, H_{eff} shall be measured from the top of the bearing seat to the top of the carrying member.
4. **Fasteners:** Nail dimensions are listed diameter by length. See pp. 21–22 for fastener information.

C-C-2021 ©2021 SIMPSON STRONG-TIE COMPANY INC.

THASR/L

Adjustable/Skewable Truss Hangers

The THASR/L hangers combine the height adjustability of THA hangers with field skewability, offering maximum flexibility for the installer, and eliminating the need for special orders. Shipped at 22½° right or left, the THASR/L hangers can be field skewed from 22½° to 75° (up to 85° for the THASR/L29 and THASR/L29-2).

Features:

- The THASR/L single and two-ply versions have straps 9" tall. The 4x version has 22" straps to fit more parallel-chord truss applications.
- The versions have only one acute side bend line to ease design and installation.
- Joist fasteners are only required from one side for skews greater than 22½°.
- Rated for installation with either nails or Strong-Drive® SD Connector screws.

Material: 16 gauge

Finish: Galvanized

Installation:

- Use all specified fasteners; see General Notes.
- Product is factory skewed to 22½° and may be field skewed from 22½° to 75° (up to 85° for the THASR/L29 and THASR/L29-2). See Installation Sequence below for skews greater than 22½°.
- For 22½° skew installations, fill all triangle holes. Triangle holes do not need to be filled for skews greater than 22½°.
- For all installations, fill the fastener hole(s) in the bottom of the hanger seat (THASR/L29 has one and all other models have two).
- For top-flange installations, the straps must be field-formed over the header a minimum of 2".
- THASR/L29 and THASR/L29-2 — For installations where either strap cannot be field-formed over the header, install the strap(s) vertical and fill all holes. Loads must be reduced as noted in the table footnotes.
- THASR/L422 — For face-mount installations, install the carrying member fasteners into the lowest holes.

Codes: See p. 11 for Code Reference Key Chart

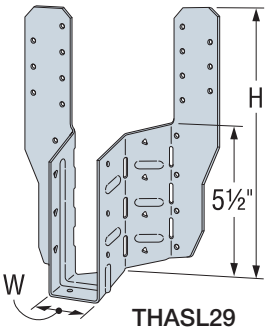

THASL29

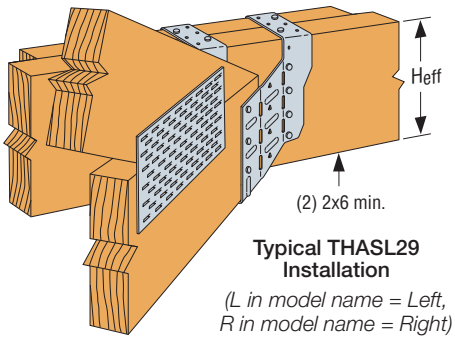

Typical THASL29 Installation

(L in model name = Left, R in model name = Right)

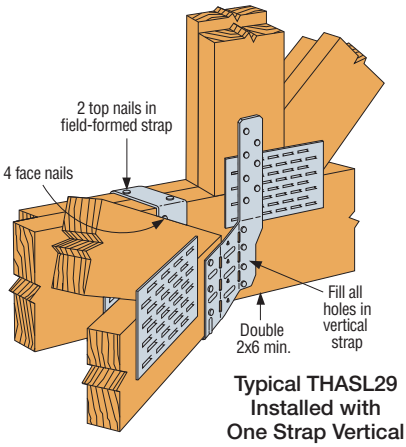

Typical THASL29 Installed with One Strap Vertical

Installation Sequence for Skews > 22½°

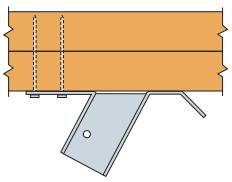

Step 1
Install acute side top and/or face header fasteners.

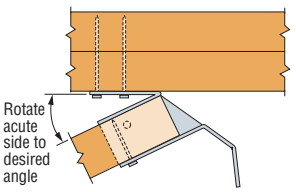

Step 2
Utilizing a piece of scrap fastened to the hanger (on obtuse side only), bend the hanger along the acute side bend line to the desired angle.

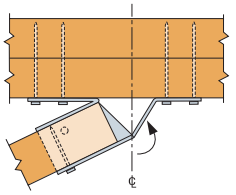

Step 3
Bend the obtuse side of the hanger back toward the header until the narrow nailing flange lies flat against the header, and install obtuse side header top and/or face fasteners.

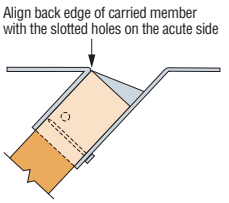

Step 4
Install joist/truss and install the carried member fasteners on the obtuse side and seat only.

C-C-2021 ©2021 SIMPSON STRONG-TIE COMPANY INC.

Adjustable/Skewable Truss Hangers (cont.)

These products are available with additional corrosion protection. For more information, see p. 14.

SD Many of these products are approved for installation with Strong-Drive® SD Connector screws. See pp. 348–352 for more information.

Allowable Loads for Installation with Nails

Min. Carried Member	Model No.	Dim. (in.) W	Dim. (in.) H	Min. H_{eff}	Skew (Degree)	Fasteners (in.) Carrying Member Top	Fasteners (in.) Carrying Member Face	Fasteners (in.) Carried Member	DF/SP Allowable Loads Uplift (160)	DF/SP Floor (100)	DF/SP Snow (115)	DF/SP Roof (125)	DF/SP Wind (160)	SPF/HF Allowable Loads Uplift (160)	SPF/HF Floor (100)	SPF/HF Snow (115)	SPF/HF Roof (125)	SPF/HF Wind (160)	Code Ref.
Top-Flange Installation																			
2x truss	THASR/L29	1⅝	9⅞	5½	22½	(4) 0.148 x 3	(8) 0.148 x 3	(7) 0.148 x 1½	795	1,975	1,975	1,975	1,975	685	1,695	1,700	1,700	1,700	—
					23 to 74	(4) 0.148 x 3	(8) 0.148 x 3	(4) 0.148 x 1½	385	1,485	1,485	1,485	1,485	330	1,275	1,275	1,275	1,275	
					75 to 85	(4) 0.148 x 3	(8) 0.148 x 3	(4) 0.148 x 1½	410	1,850	1,895	1,895	1,895	355	1,380	1,420	1,445	1,545	
2-2x truss	THASR/L29-2	3⅛	9⅞	5½	22½	(4) 0.148 x 3	(8) 0.148 x 3	(8) 0.148 x 3	825	1,660	1,660	1,660	1,660	710	1,425	1,425	1,425	1,425	
					23 to 45	(4) 0.148 x 3	(8) 0.148 x 3	(5) 0.148 x 3	295	1,285	1,285	1,285	1,285	255	1,105	1,105	1,105	1,105	
					46 to 85	(4) 0.148 x 3	(8) 0.148 x 3	(5) 0.148 x 3	260	1,285	1,285	1,285	1,285	225	1,105	1,105	1,105	1,105	
4x truss	THASR/L422	3⅝	22	8	22½	(4) 0.148 x 3	(4) 0.148 x 3	(8) 0.148 x 3	—	1,115	1,115	1,115	1,115	—	960	960	960	960	
					23 to 45	(4) 0.148 x 3	(4) 0.148 x 3	(5) 0.148 x 3	—	925	925	925	925	—	795	795	795	795	
					46 To 75	(4) 0.148 x 3	(4) 0.148 x 3	(5) 0.148 x 3	—	745	745	745	745	—	640	640	640	640	
Face-Mount Installation																			
4x truss	THASR/L422	3⅝	22	5½	22½	—	(8) 0.148 x 3	(8) 0.148 x 3	—	810	810	810	810	—	700	700	700	700	—
					23 to 45	—	(8) 0.148 x 3	(5) 0.148 x 3	—	730	730	730	730	—	625	625	625	625	
					46 to 75	—	(8) 0.148 x 3	(5) 0.148 x 3	—	730	730	730	730	—	625	625	625	625	

Allowable Loads for Installation with Strong-Drive® SD Connector Screws

Min. Carried Member	Model No.	Dim. (in.) W	Dim. (in.) H	Min. H_{eff}	Skew (Degree)	Fasteners (in.) Carrying Member Top	Fasteners (in.) Carrying Member Face	Fasteners (in.) Carried Member	DF/SP Allowable Loads Uplift (160)	DF/SP Floor (100)	DF/SP Snow (115)	DF/SP Roof (125)	DF/SP Wind (160)	SPF/HF Allowable Loads Uplift (160)	SPF/HF Floor (100)	SPF/HF Snow (115)	SPF/HF Roof (125)	SPF/HF Wind (160)	Code Ref.
Top-Flange Installation																			
2x truss	THASR/L29	1⅝	9⅞	5½	22½	(4) #9x2½" SD	(8) #9x2½" SD	(7) #9x1½" SD	1,085	2,510	2,665	2,765	2,790	935	1,735	1,835	1,905	2,140	—
					23 to 45	(4) #9x2½" SD	(8) #9x2½" SD	(4) #9x1½" SD	660	1,995	2,075	2,125	2,220	540	1,400	1,450	1,485	1,600	
					46 to 85	(4) #9x2½" SD	(8) #9x2½" SD	(4) #9x1½" SD	535	1,995	2,075	2,125	2,220	460	1,400	1,450	1,485	1,600	
2-2x truss	THASR/L29-2	3⅛	9⅞	5½	22½	(4) #9x2½" SD	(8) #9x2½" SD	(8) #9x2½" SD	1,450	2,745	2,745	2,745	2,745	1,075	2,360	2,360	2,360	2,360	
					23 to 45	(4) #9x2½" SD	(8) #9x2½" SD	(5) #9x2½" SD	530	1,915	1,915	1,915	1,915	455	1,645	1,645	1,645	1,645	
					46 to 85	(4) #9x2½" SD	(8) #9x2½" SD	(5) #9x2½" SD	665	1,530	1,530	1,530	1,530	540	1,315	1,315	1,315	1,315	
4x truss	THASR/L422	3⅝	22	8	22½	(4) #9x2½" SD	(4) #9x2½" SD	(8) #9x2½" SD	—	1,140	1,140	1,140	1,140	—	980	980	980	980	
					23 to 45	(4) #9x2½" SD	(4) #9x2½" SD	(5) #9x2½" SD	—	1,065	1,065	1,065	1,065	—	915	915	915	915	
					46 to 75	(4) #9x2½" SD	(4) #9x2½" SD	(5) #9x2½" SD	—	870	870	870	870	—	750	750	750	750	
Face-Mount Installation																			
4x truss	THASR/L422	3⅝	22	5½	22½	—	(8) #9x2½" SD	(8) #9x2½" SD	—	1,600	1,720	1,720	1,720	—	895	1,030	1,120	1,435	—
					23 to 45	—	(8) #9x2½" SD	(5) #9x2½" SD	—	1,330	1,330	1,330	1,330	—	895	1,030	1,120	1,145	
					46 to 75	—	(8) #9x2½" SD	(5) #9x2½" SD	—	1,330	1,330	1,330	1,330	—	895	1,030	1,120	1,145	

1. Uplift loads have been increased for earthquake or wind loading with no further increase allowed. Reduce where other loads govern.
2. Wind (160) is a download rating.
3. Minimum carried member heel height shall be 4½".
4. H_{eff} is the distance from the top of the hanger seat to the top of the carrying member.
5. For tabulated top-flange installation loads, the straps must be wrapped over the header a minimum of 2". Allowable downloads for the THASR/L29 and THASR/L29-2 with one or both straps installed vertically (all holes filled) are 90% of the tabulated downloads for skews greater than 22½° and 85% of the tabulated downloads for 22½° skews. Allowable uplift capacities are 100% of the tabulated uplift load capacities.
6. Allowable downloads for 75°–85° skews with one or both straps installed vertically (with all holes filled) shall be limited to 75% of these loads.
7. **Fasteners:** Nail dimensions are listed diameter by length. SD screws are Simpson Strong-Tie® Strong-Drive SD Connector screws. See pp. 21–22 for fastener information.

C-C-2021 ©2021 SIMPSON STRONG-TIE COMPANY INC.

VTCR

Single-Sided Valley Truss Clip

This product is preferable to similar connectors because of (a) easier installation, (b) higher loads, (c) lower installed cost, or a combination of these features.

The VTCR is a single-sided valley truss clip that provides a positive connection between the valley truss and the supporting framing below. Installed on top of the roof sheathing, it eliminates the need to add a support wedge under the valley truss or to bevel the bottom chord to match the roof pitch.

- Single-sided for new construction or retrofit applications — can be installed after the valley truss is set in place
- Accommodates pitches from 0/12 to 12/12
- Can be installed on either beveled or non-beveled bottom chords
- Installs with nails or Strong-Drive® SD Connector screws

Material: 18 gauge **Finish:** Galvanized

Installation:

- The dome holes assist in installing the fasteners into the supporting framing at approximately 45°

Codes: See p. 11 for Code Reference Key Chart

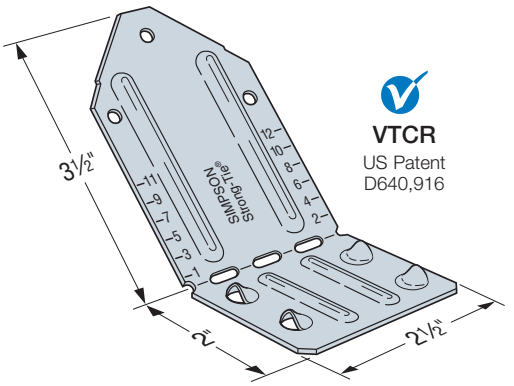

VTCR
US Patent D640,916

SD Many of these products are approved for installation with Strong-Drive® SD Connector screws. See pp. 348–352 for more information.

Model No.	Fasteners (in.)		Supporting Roof Pitch	DF/SP Allowable Loads		SPF/HF Allowable Loads		Code Ref.
	Supporting Framing	Valley Truss		Uplift[3] (160)	Download[5] (100/115/125/160)	Uplift[3] (160)	Download[6] (100/115/125/160)	
VTCR	(4) 0.148 x 3	(3) 0.148 x 1½	< 4/12	370	790	320	655	IBC, FL
			4/12 to 12/12	370	790	320	655	
	(4) #9 x 2½" SD	(3) #9 x 1½" SD	< 4/12	390	790	335	655	
			4/12 to 12/12	495	790	425	655	

1. Uplift loads have been increased for earthquake or wind loading with no further increase allowed. Reduce where other loads govern.
2. Loads are based on installation over 7⁄16" or 15⁄32" sheathing. For installation over 19⁄32" or 5⁄8" sheathing, allowable uplift loads are 285 lb. (DF/SP) and 245 lb. (SPF/HF) when installed with nails, or 370 lb. (DF/SP) and 320 lb. (SPF/HF) when installed with screws.
3. When attached directly to the supporting framing with either screws or nails, the allowable uplift for pitches less than 4/12 is 240 lb. (DF/SP) and 205 lb. (SPF/HF). For pitches 4/12 to 12/12, use the tabulated uplift loads.
4. Allowable uplift loads are based on the lower of the test loads at 3⁄16" deflection or the ultimate load divided by a safety factor of three.
5. Southern pine allowable download is 750 lb.
6. Hem-fir allowable download is 625 lb.
7. When the valley truss and supporting framing are of different species, use the lower tabulated values.
8. **Fasteners:** Nail dimensions are listed diameter by length. SD screws are Simpson Strong-Tie® Strong-Drive SD Connector screws. See pp. 21–22 for fastener information.

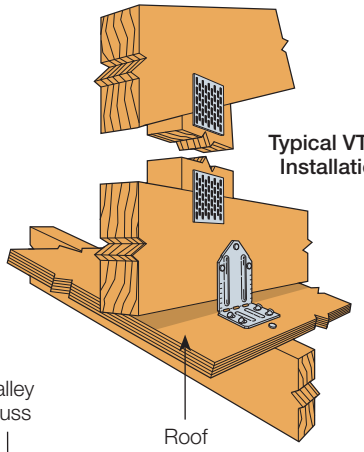

Typical VTCR Installation

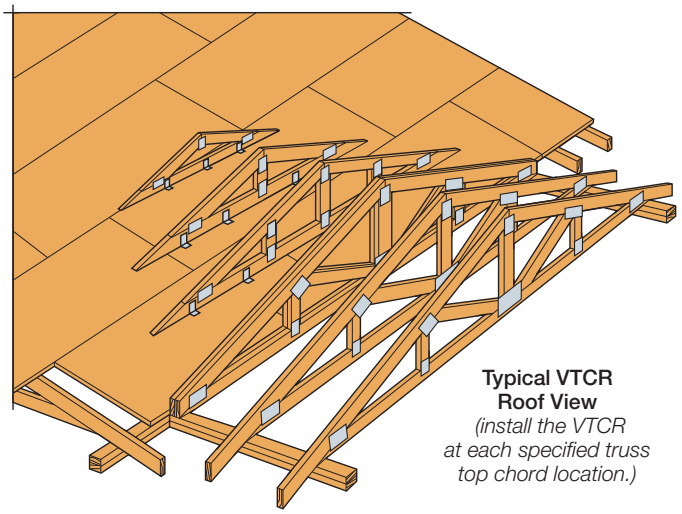

Typical VTCR Roof View
(install the VTCR at each specified truss top chord location.)

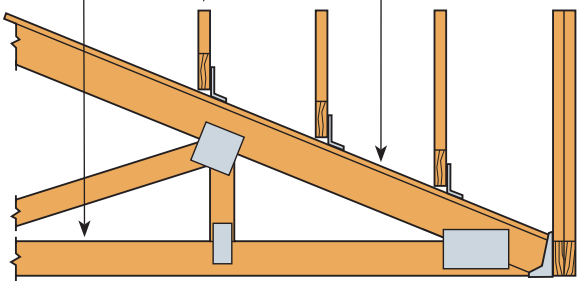

Typical VTCR Side View

C-C-2021 ©2021 SIMPSON STRONG-TIE COMPANY INC.

LUS/MUS/HUS/HHUS/HGUS

Face-Mount Joist Hangers

This product is preferable to similar connectors because of a) easier installation, b) higher loads, c) lower installed cost, or a combination of these features.

The double-shear hanger series, ranging from the light-capacity LUS hangers to the highest-capacity HGUS hangers, feature innovative double-shear nailing that distributes the load through two points on each joist nail for greater strength. This allows for fewer nails, faster installation and the use of all common nails for the same connection.

For medium-load truss applications, the MUS offers a lower-cost alternative and easier installation than the HUS or THA hangers, while providing greater load capacity and bearing than the LUS.

Material: See tables on pp. 200–201

Finish: Galvanized. Some products available in stainless steel or ZMAX® coating. See Corrosion Information, pp. 12–15.

Installation:

- Use all specified fasteners; see General Notes.
- Nails must be driven at an angle through the joist or truss into the header to achieve the table loads.
- Not designed for welded or nailer applications.

Options:

- LUS and MUS hangers cannot be modified
- Concealed flanges are not available for HGUS and HHUS
- Other sizes available; consult your Simpson Strong-Tie representative

Codes: See p. 11 for Code Reference Key Chart

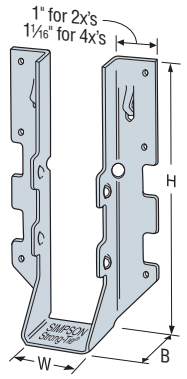

LUS28

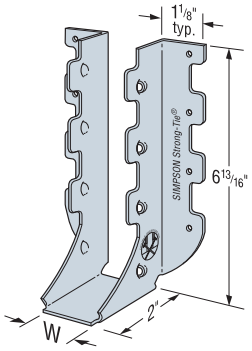

MUS28

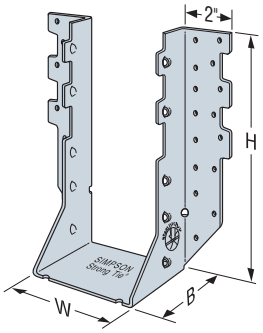

HHUS210-2

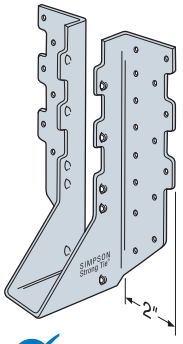

HUS210
(HUS26, HUS28, and HHUS similar)

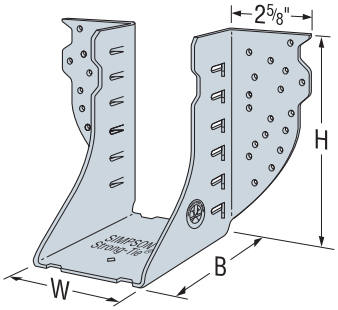

HGUS28-2

Double-Shear Nailing
Top View

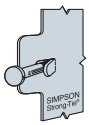

Double-Shear Nailing
Side View
Do not bend tab

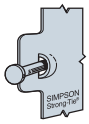

Dome Double-Shear
Nailing Side View
(Available on some models)

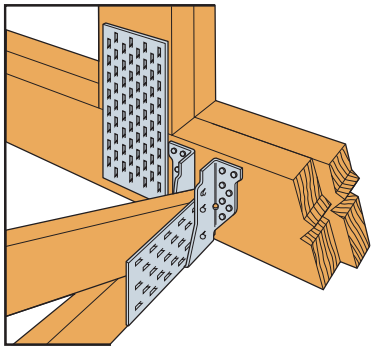

Typical HUS26 Installation with Reduced Heel Height
(multiple member fastening by designer)

C-C-2021 ©2021 SIMPSON STRONG-TIE COMPANY INC.

LUS/MUS/HUS/HHUS/HGUS

Face-Mount Joist Hangers (cont.)

Model No.	Min. Heel Height	Ga.	Dimensions (in.) W	H	B	Fasteners Carrying Member	Carried Member
Single 2x Sizes							
LUS24	2⅝	18	1 9/16	3⅛	1¾	(4) 0.148 x 3	(2) 0.148 x 3
LUS26	4¼	18	1 9/16	4¾	1¾	(4) 0.148 x 3	(4) 0.148 x 3
MUS26	4 11/16	18	1 9/16	5 3/16	2	(6) 0.148 x 3	(6) 0.148 x 3
HUS26	4 5/16	16	1⅝	5⅜	3	(14) 0.162 x 3½	(6) 0.162 x 3½
HGUS26	4 9/16	12	1⅝	5⅜	5	(20) 0.162 x 3½	(8) 0.162 x 3½
LUS28	4 3/16	18	1 9/16	6⅝	1¾	(6) 0.148 x 3	(4) 0.148 x 3
MUS28	6 5/16	18	1 9/16	6 13/16	2	(8) 0.148 x 3	(8) 0.148 x 3
HUS28	6½	16	1⅝	7	3	(22) 0.162 x 3½	(8) 0.162 x 3½
HGUS28	6 9/16	12	1⅝	7⅛	5	(36) 0.162 x 3½	(12) 0.162 x 3½
LUS210	4¼	18	1 9/16	7 13/16	1¾	(8) 0.148 x 3	(4) 0.148 x 3
HUS210	8⅜	16	1⅝	9	3	(30) 0.162 x 3½	(10) 0.162 x 3½
HGUS210	8 9/16	12	1⅝	9⅛	5	(46) 0.162 x 3½	(16) 0.162 x 3½

1. See table below for allowable loads.

These products are available with additional corrosion protection. For more information, see p. 14.

SS For stainless-steel fasteners, see p. 21.

SD Many of these products are approved for installation with Strong-Drive® SD Connector screws. See pp. 348–352 for more information.

Model No.	DF Allowable Loads Uplift (160)	Floor (100)	Snow (115)	Roof (125)	Wind (160)	SP Allowable Loads Uplift (160)	Floor (100)	Snow (115)	Roof (125)	Wind (160)	SPF/HF Allowable Loads Uplift (160)	Floor (100)	Snow (115)	Roof (125)	Wind (160)	Code Ref.
Single 2x Sizes																
LUS24	435	670	765	820	1,045	435	725	825	890	1,120	360	495	565	605	770	IBC, FL, LA
LUS26	1,165	865	990	1,070	1,355	1,165	935	1,070	1,150	1,475	865	635	725	785	1,000	
MUS26	930	1,295	1,480	1,560	1,560	930	1,405	1,560	1,560	1,560	810	955	1,090	1,180	1,350	
HUS26	1,320	2,735	3,095	3,235	3,235	1,320	2,960	3,280	3,280	3,280	1,150	2,350	2,660	2,780	2,780	
HGUS26	1,040	4,355	4,875	5,230	5,390	1,045	4,725	5,295	5,390	5,390	1,005	3,755	4,205	4,495	5,390	
LUS28	1,165	1,100	1,260	1,350	1,725	1,165	1,195	1,360	1,465	1,730	865	810	925	1,000	1,270	
MUS28	1,320	1,730	1,975	2,125	2,255	1,320	1,875	2,135	2,255	2,255	1,150	1,270	1,455	1,575	1,955	
HUS28	1,760	4,095	4,095	4,095	4,095	1,760	4,095	4,095	4,095	4,095	1,480	3,520	3,520	3,520	3,520	
HGUS28	1,650	7,275	7,275	7,275	7,275	1,650	7,275	7,275	7,275	7,275	1,485	6,010	6,255	6,255	6,255	
LUS210	1,165	1,335	1,530	1,640	2,090	1,165	1,450	1,655	1,775	2,270	865	985	1,120	1,215	1,500	
HUS210	2,635	5,450	5,795	5,830	5,830	2,635	5,395	5,780	5,830	5,830	2,220	4,685	4,985	5,015	5,015	
HGUS210	2,090	9,100	9,100	9,100	9,100	2,090	9,100	9,100	9,100	9,100	1,545	6,340	6,730	6,730	6,730	

1. For dimensions and fastener information, see table above. See table footnotes on p. 201.

HHUS/HGUS

See Hanger Options information on pp. 97–99.

HHUS — Sloped and/or Skewed Seat

- HHUS hangers can be skewed to a maximum of 45° and/or sloped to a maximum of 45°
- For skew only, maximum allowable download is 0.85 of the table load
- For sloped only or sloped and skewed hangers, the maximum allowable download is 0.65 of the table load
- Uplift loads for sloped/skewed conditions are 0.72 of the table load, not to exceed 2,475 lb.
- The joist must be bevel-cut to allow for double shear nailing

HGUS — Skewed Seat

- HGUS hangers can be skewed only to a maximum of 45°. Allowable loads are:

HGUS Seat Width	Joist	Down Load	Uplift
W < 2"	Square cut	0.62 of table load	0.46 of table load
W < 2"	Bevel cut	0.72 of table load	0.46 of table load
2" < W < 6"	Bevel cut	0.85 of table load	0.41 of table load
2" < W < 6"	Square cut	0.46 of table load	0.41 of table load
W > 6"	Bevel cut	0.85 of table load	0.41 of table load

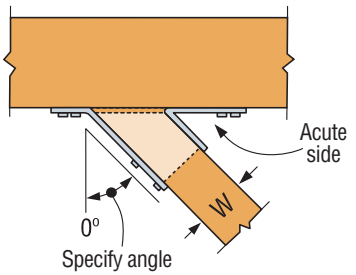

Top View HHUS Hanger Skewed Right
(joist must be bevel cut)
All joist nails installed on the outside angle *(non-acute side).*

C-C-2021 ©2021 SIMPSON STRONG-TIE COMPANY INC.

LUS/MUS/HUS/HHUS/HGUS

SIMPSON Strong-Tie®

These products are available with additional corrosion protection. For more information, see p. 14.

SS For stainless-steel fasteners, see p. 21.

SD Many of these products are approved for installation with Strong-Drive® SD Connector screws. See pp. 348–352 for more information.

Model No.	Min. Heel Height	Ga.	Dimensions (in.) W	H	B	Fasteners (in.) Carrying Member	Carried Member	DF/SP Allowable Loads Uplift (160)	Floor (100)	Snow (115)	Roof (125)	Wind (160)	SPF/HF Allowable Loads Uplift (160)	Floor (100)	Snow (115)	Roof (125)	Wind (160)	Code Ref.
Double 2x Sizes																		
LUS24-2	2¼	18	3⅛	3⅛	2	(4) 0.162 x 3½	(2) 0.162 x 3½	410	800	905	980	1,245	355	690	780	845	1,070	IBC, FL, LA
LUS26-2	4 9/16	18	3⅛	4⅞	2	(4) 0.162 x 3½	(4) 0.162 x 3½	1,060	1,030	1,170	1,265	1,595	910	885	1,005	1,090	1,370	
HHUS26-2	4 5/16	14	3 5/16	5⅜	3	(14) 0.162 x 3½	(6) 0.162 x 3½	1,320	2,830	3,190	3,415	4,250	1,135	2,435	2,745	2,935	3,655	
HGUS26-2	4 9/16	12	3 5/16	5 7/16	4	(20) 0.162 x 3½	(8) 0.162 x 3½	2,155	4,355	4,875	5,230	5,575	2,155	3,755	4,875	5,230	5,255	
LUS28-2	4 9/16	18	3⅛	7	2	(6) 0.162 x 3½	(4) 0.162 x 3½	1,060	1,315	1,490	1,610	2,030	910	1,130	1,280	1,385	1,745	
HHUS28-2	6 9/16	14	3 5/16	7¼	3	(22) 0.162 x 3½	(8) 0.162 x 3½	1,760	4,265	4,810	5,155	5,980	1,515	3,670	4,135	4,435	5,145	
HGUS28-2	6 9/16	12	3 5/16	7 3/16	4	(36) 0.162 x 3½	(12) 0.162 x 3½	3,235	7,460	7,460	7,460	7,460	2,780	6,415	6,415	6,415	6,415	
LUS210-2	6 7/16	18	3⅛	9	2	(8) 0.162 x 3½	(6) 0.162 x 3½	1,445	1,830	2,075	2,245	2,830	1,245	1,575	1,785	1,930	2,435	
HHUS210-2	8⅜	14	3 5/16	9 3/16	3	(30) 0.162 x 3½	(10) 0.162 x 3½	3,550	5,705	6,435	6,485	6,485	3,335	4,905	5,340	5,060	5,190	
HGUS210-2	8 9/16	12	3 5/16	9 3/16	4	(46) 0.162 x 3½	(16) 0.162 x 3½	4,095	9,100	9,100	9,100	9,100	3,520	7,460	7,825	7,825	7,825	
Triple 2x Sizes																		
HGUS26-3	4 13/16	12	4 15/16	5½	4	(20) 0.162 x 3½	(8) 0.162 x 3½	2,155	4,355	4,875	5,230	5,575	2,155	3,755	4,875	5,230	5,255	IBC, FL, LA
HGUS28-3	6 13/16	12	4 15/16	7¼	4	(36) 0.162 x 3½	(12) 0.162 x 3½	3,235	7,460	7,460	7,460	7,460	2,780	6,415	6,415	6,415	6,415	
HHUS210-3	8⅜	14	4 11/16	8⅞	3	(30) 0.162 x 3½	(10) 0.162 x 3½	3,405	5,640	6,380	6,485	6,485	2,930	4,850	5,485	5,575	5,575	FL
HGUS210-3	8 13/16	12	4 15/16	9¼	4	(46) 0.162 x 3½	(16) 0.162 x 3½	4,095	9,100	9,100	9,100	9,100	3,520	7,825	7,825	7,825	7,825	IBC, FL, LA
HGUS212-3	10⅝	12	4 15/16	10¾	4	(56) 0.162 x 3½	(20) 0.162 x 3½	5,205	11,915	13,330	14,290	14,350	4,730	10,280	12,420	12,420	12,420	
HGUS214-3	12⅝	12	4 15/16	12¾	4	(66) 0.162 x 3½	(22) 0.162 x 3½	5,360	13,860	14,350	14,350	14,350	4,915	11,960	12,420	12,420	12,420	
Quadruple 2x Sizes																		
HGUS26-4	5½	12	6 9/16	5 7/16	4	(20) 0.162 x 3½	8) 0.162 x 3½	2,155	4,355	4,875	5,230	5,575	2,155	3,755	4,875	5,230	5,255	IBC, FL, LA
HGUS28-4	7¼	12	6 9/16	7 3/16	4	(36) 0.162 x 3½	(12) 0.162 x 3½	3,235	7,460	7,460	7,460	7,460	2,780	6,415	6,415	6,415	6,415	
HHUS210-4	8⅜	14	6⅛	8⅞	3	(30) 0.162 x 3½	(10) 0.162 x 3½	3,405	5,640	6,380	6,485	6,485	2,930	4,850	5,485	5,575	5,575	FL
HGUS210-4	9¼	12	6 9/16	9 3/16	4	(46) 0.162 x 3½	(16) 0.162 x 3½	4,095	9,100	9,100	9,100	9,100	3,520	7,825	7,825	7,825	7,825	IBC, FL, LA
HGUS212-4	10⅝	12	6 9/16	10⅝	4	(56) 0.162 x 3½	(20) 0.162 x 3½	5,205	11,915	13,330	14,290	14,350	4,730	10,280	12,420	12,420	12,420	
HGUS214-4	12⅝	12	6 9/16	12⅝	4	(66) 0.162 x 3½	(22) 0.162 x 3½	5,360	13,860	14,350	14,350	14,350	4,915	11,960	12,420	12,420	12,420	
4x Sizes																		
LUS46	4⅜	18	3 9/16	4¾	2	(4) 0.162 x 3½	(4) 0.162 x 3½	1,060	1,030	1,170	1,265	1,595	910	885	1,005	1,090	1,370	IBC, FL, LA
HGUS46	4 7/16	12	3⅝	4 7/16	4	(20) 0.162 x 3½	(8) 0.162 x 3½	2,155	4,355	4,875	5,230	5,575	2,155	3,755	4,875	5,230	5,255	
HHUS46	4 5/16	14	3⅝	5 3/16	3	(14) 0.162 x 3½	(6) 0.162 x 3½	1,320	2,830	3,190	3,415	4,250	1,135	2,435	2,745	2,935	3,655	
LUS48	4⅜	18	3 9/16	6¾	2	(6) 0.162 x 3½	(4) 0.162 x 3½	1,060	1,315	1,490	1,610	2,030	910	1,130	1,280	1,385	1,745	
HUS48	6 15/16	14	3 9/16	7	2	(6) 0.162 x 3½	(6) 0.162 x 3½	1,320	1,580	1,790	1,930	2,415	1,135	1,360	1,540	1,660	2,075	
HHUS48	6½	14	3⅝	7⅛	3	(22) 0.162 x 3½	(8) 0.162 x 3½	1,760	4,265	4,810	5,155	5,980	1,515	3,670	4,135	4,435	5,145	
HGUS48	6 7/16	12	3⅝	7 1/16	4	(36) 0.162 x 3½	(12) 0.162 x 3½	3,235	7,460	7,460	7,460	7,460	2,780	6,415	6,415	6,415	6,415	
LUS410	6¼	18	3 9/16	8¾	2	(8) 0.162 x 3½	(6) 0.162 x 3½	1,445	1,830	2,075	2,245	2,830	1,245	1,575	1,785	1,930	2,435	
HHUS410	8⅜	14	3⅝	9	3	(30) 0.162 x 3½	(10) 0.162 x 3½	3,550	5,705	6,435	6,485	6,485	3,265	4,905	5,535	5,575	5,575	
HGUS410	8 7/16	12	3⅝	9 1/16	4	(46) 0.162 x 3½	(16) 0.162 x 3½	4,095	9,100	9,100	9,100	9,100	3,520	7,825	7,825	7,825	7,825	
HGUS412	10 7/16	12	3⅝	10 7/16	4	(56) 0.162 x 3½	(20) 0.162 x 3½	5,205	11,915	13,330	14,290	14,350	4,730	10,280	12,420	12,420	12,420	
HGUS414	11 7/16	12	3⅝	12 7/16	4	(66) 0.162 x 3½	(22) 0.162 x 3½	5,360	13,860	14,350	14,350	14,350	4,915	11,960	12,420	12,420	12,420	
Double 4x Sizes																		
HGUS7.37/10	8 7/16	12	7⅜	8 9/16	4	(46) 0.162 x 3½	(16) 0.162 x 3½	4,095	9,100	9,100	9,100	9,100	3,520	7,825	7,825	7,825	7,825	IBC, FL, LA
HGUS7.37/12	10 7/16	12	7⅜	10 9/16	4	(56) 0.162 x 3½	(20) 0.162 x 3½	5,205	11,915	13,330	14,290	14,350	4,730	10,280	12,420	12,420	12,420	
HGUS7.37/14	11 7/16	12	7⅜	12 9/16	4	(66) 0.162 x 3½	(22) 0.162 x 3½	5,360	13,860	14,350	14,350	14,350	4,915	11,960	12,420	12,420	12,420	

1. Uplift loads have been increased for earthquake or wind loading with no further increase allowed. Reduce where other loads govern.
2. Wind (160) is a download rating.
3. Minimum heel height shown is required to achieve full table loads. For less than minimum heel height, see technical bulletin T-C-REDHEEL at **strongtie.com**.
4. Truss chord cross-grain tension may limit allowable loads in accordance with ANSI/TPI 1-2014. Simpson Strong-Tie® Connector Selector™ software includes the evaluation of cross-grain tension in its hanger allowable loads. For additional information, contact Simpson Strong-Tie.
5. Loads shown are based on a two-ply 2x carrying member minimum for nailed hangers. With 3x carrying members: when 0.162" x 3½" nails are specified, use 0.162" x 2½" nails into the header and 0.162" x 3½" nails into the joist with no load reduction. When 0.148" x 3" nails are specified, use 0.148" x 2½" nails into the header and 0.148" x 3" nails into the joist with no load reduction. With 2x carrying members: when 0.162" x 3½" nails are specified, use 0.148" x 1½" nails into the header and 0.148" x 3" nails into the joist and reduce the load to 0.64 of the table values. When 0.148" x 3" nails are specified, use 0.148" x 1½" nails into the header and 0.148" x 3" nails into the joist and reduce the load to 0.77 of the table values.
6. **Fasteners:** Nail dimensions are listed diameter by length. See pp. 21–22 for fastener information.

C-C-2021 ©2021 SIMPSON STRONG-TIE COMPANY INC.

HTU

Face-Mount Truss Hanger

The HTU face-mount truss hanger has nail patterns designed specifically for shallow heel heights, so that full allowable loads (with minimum nailing) apply to heel heights as low as 3⅞". Minimum and maximum nailing options provide solutions for varying heel heights and end conditions.

Alternate allowable loads are provided for gaps between the end of the truss and the carrying member up to ½" max. to allow for greater construction tolerances (maximum gap for standard allowable loads is ⅛" per ASTM D1761 and D7147). See technical bulletin T-C-HANGERGAP at **strongtie.com** for more information.

Material: 16 gauge

Finish: Galvanized

Installation:

- Use all specified fasteners; see General Notes
- Can be installed filling round holes only, or filling round and triangle holes for maximum values
- See alternate installation for applications using the HTU26 on a 2x4 carrying member or HTU28 or HTU210 on a 2x6 carrying member for additional uplift capacity

Options:

- HTU may be skewed up to 67½°. See Hanger Options on p. 204 for allowable loads.
- See engineering letter L-C-HTUSD at **strongtie.com** for installation with Strong-Drive® SD fasteners.

Codes: See p. 11 for Code Reference Key Chart

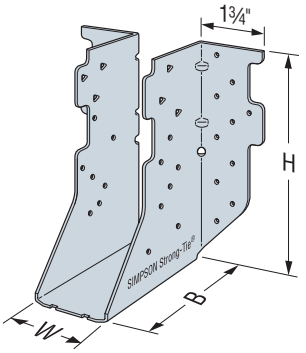

HTU26

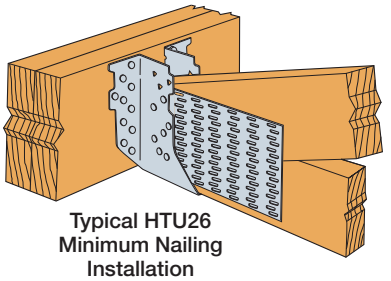

Typical HTU26 Minimum Nailing Installation

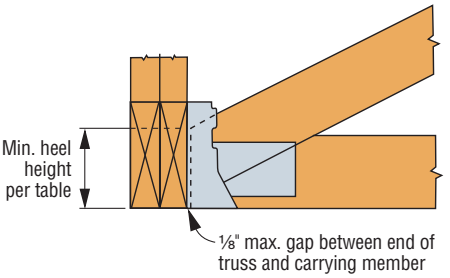

HTU Installation for Standard Allowable Loads
(for ½" maximum gap, use Alternate Allowable Loads.)

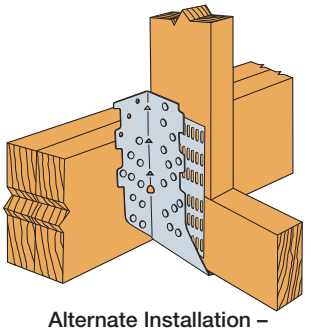

Alternate Installation – HTU28 Installed on 2x6 Carrying Member
(HTU210 similar)

SD Many of these products are approved for installation with Strong-Drive® SD Connector screws. See pp. 348–352 for more information.

Standard Allowable Loads (⅛" Maximum Hanger Gap)

Model No.	Min. Heel Height	Dimensions (in.)			Fasteners (in.)		DF/SP Allowable Loads					SPF/HF Allowable Loads					Code Ref.
		W	H	B	Carrying Member	Carried Member	Uplift (160)	Floor (100)	Snow (115)	Roof (125)	Wind (160)	Uplift (160)	Floor (100)	Snow (115)	Roof (125)	Wind (160)	
Single 2x Sizes																	
HTU26	3½	1⅝	5 7/16	3½	(20) 0.162 x 3½	(11) 0.148 x 1½	640	2,670	2,670	2,670	2,670	550	1,680	1,680	1,680	1,680	IBC, FL, LA
HTU26 (Min.)	3⅞	1⅝	5 7/16	3½	(20) 0.162 x 3½	(14) 0.148 x 1½	1,250	2,940	3,200	3,200	3,200	1,075	1,852	2,015	2,015	2,015	
HTU26 (Max.)	5½	1⅝	5 7/16	3½	(20) 0.162 x 3½	(20) 0.148 x 1½	1,555	2,940	3,320	3,580	4,010	1,335	2,530	2,855	3,080	3,450	
HTU28 (Min.)	3⅞	1⅝	7 1/16	3½	(26) 0.162 x 3½	(14) 0.148 x 1½	1,235	3,820	3,895	3,895	3,895	1,060	2,865	2,920	2,920	2,920	
HTU28 (Max.)	7¼	1⅝	7 1/16	3½	(26) 0.162 x 3½	(26) 0.148 x 1½	2,020	3,820	4,315	4,655	5,435	1,735	3,285	3,710	4,005	4,675	
HTU210 (Min.)	3⅞	1⅝	9 1/16	3½	(32) 0.162 x 3½	(14) 0.148 x 1½	1,330	4,300	4,300	4,300	4,300	1,145	3,225	3,225	3,225	3,225	
HTU210 (Max.)	9¼	1⅝	9 1/16	3½	(32) 0.162 x 3½	(32) 0.148 x 1½	3,315	4,705	5,310	5,730	5,995	2,850	4,045	4,565	4,930	5,155	
Double 2x Sizes																	
HTU26-2 (Min.)	3⅞	3 5/16	5 7/16	3½	(20) 0.162 x 3½	(14) 0.148 x 3	1,515	2,940	3,320	3,580	3,910	1,305	1,850	2,090	2,255	2,465	IBC, FL, LA
HTU26-2 (Max.)	5½	3 5/16	5 7/16	3½	(20) 0.162 x 3½	(20) 0.148 x 3	2,175	2,940	3,320	3,580	4,480	1,870	2,530	2,855	3,080	3,855	
HTU28-2 (Min.)	3⅞	3 5/16	7 1/16	3½	(26) 0.162 x 3½	(14) 0.148 x 3	1,530	3,820	4,310	4,310	4,310	1,315	2,865	3,235	3,235	3,235	
HTU28-2 (Max.)	7¼	3 5/16	7 1/16	3½	(26) 0.162 x 3½	(26) 0.148 x 3	3,485	3,820	4,315	4,655	5,825	2,995	3,285	3,710	4,005	5,010	
HTU210-2 (Min.)	3⅞	3 5/16	9 1/16	3½	(32) 0.162 x 3½	(14) 0.148 x 3	1,755	4,705	4,815	4,815	4,815	1,510	3,530	3,610	3,610	3,610	
HTU210-2 (Max.)	9¼	3 5/16	9 1/16	3½	(32) 0.162 x 3½	(32) 0.148 x 3	4,110	4,705	5,310	5,730	6,515	3,535	4,045	4,565	4,930	5,605	

1. The maximum hanger gap is measured between the joist (or truss) end and the carrying member.
2. Minimum heel heights required for full table loads are based on a minimum 2:12 pitch.
3. Uplift loads have been increased for earthquake or wind loading with no further increase allowed. Reduce where other loads govern.
4. Wind (160) is a download rating.
5. For hanger gaps between ⅛" and ½", use the Alternate Allowable Loads.
6. Truss chord cross-grain tension may limit allowable loads in accordance with ANSI/TPI 1-2014. Simpson Strong-Tie® Connector Selector™ software includes the evaluation of cross-grain tension in its hanger allowable loads. For additional information, contact Simpson Strong-Tie.
7. Loads shown are based on a minimum two-ply 2x carrying member. For single 2x carrying members, use 0.148" x 1½" nails in the header and reduce the allowable download to 0.70 of the table value. The allowable uplift is 100% of the table load.
8. **Fasteners:** Nail dimensions are listed diameter by length. See pp. 21–22 for fastener information.

C-C-2021 ©2021 SIMPSON STRONG-TIE COMPANY INC.

Face-Mount Truss Hanger (cont.)

SD Many of these products are approved for installation with Strong-Drive® SD Connector screws. See pp. 348–352 for more information.

Alternate Installation Table for 2x4 and 2x6 Carrying Member

Model No.	Min. Heel Height (in.)	Minimum Carrying Member	Fasteners (in.)		DF/SP Allowable Loads					SPF/HF Allowable Loads					Code Ref.
			Carrying Member	Carried Member	Uplift (160)	Floor (100)	Snow (115)	Roof (125)	Wind (160)	Uplift (160)	Floor (100)	Snow (115)	Roof (125)	Wind (160)	
HTU26 (Min.)	3⅞	(2) 2x4	(10) 0.162 x 3½	(14) 0.148 x 1½	845	1,470	1,660	1,790	1,875	795	1,265	1,430	1,540	1,615	IBC, FL, LA
HTU26 (Max.)	5½	(2) 2x4	(10) 0.162 x 3½	(20) 0.148 x 1½	1,240	1,470	1,660	1,790	2,220	1065	1,265	1,430	1,540	1,910	
HTU28 (Max.)	7¼	(2) 2x6	(20) 0.162 x 3½	(26) 0.148 x 1½	1,920	2,940	3,320	3,580	3,905	1,650	2,530	2,855	3,080	3,360	
HTU210 (Max.)	9¼	(2) 2x6	(20) 0.162 x 3½	(32) 0.148 x 1½	2,880	2,940	3,320	3,580	3,905	2,475	2,530	2,855	3,080	3,360	

1. See table below for dimensions and additional footnotes.
2. Maximum hanger gap for the alternative installation is ½".
3. Wind (160) is a download rating.
4. **Fasteners:** Nail dimensions are listed diameter by length. See pp. 21–22 for fastener information.

Alternative Allowable Loads (½" Maximum Hanger Gap)

Model No.	Min. Heel Height	Dimensions (in.)			Fasteners (in.)		DF/SP Allowable Loads					SPF/HF Allowable Loads					Code Ref.
		W	H	B	Carrying Member	Carried Member	Uplift (160)	Floor (100)	Snow (115)	Roof (125)	Wind (160)	Uplift (160)	Floor (100)	Snow (115)	Roof (125)	Wind (160)	
Single 2x Sizes																	
HTU26	3½	1⅝	5 7/16	3½	(20) 0.162 x 3½	(11) 0.148 x 1½	635	2,395	2,395	2,395	2,395	545	1510	1,510	1,510	1,510	IBC, FL, LA
HTU26 (Min.)	3⅞	1⅝	5 7/16	3½	(20) 0.162 x 3½	(14) 0.148 x 1½	1,175	2,940	3,100	3,100	3,100	1,010	1,955	1,955	1,955	1,955	
HTU26 (Max.)	5½	1⅝	5 7/16	3½	(20) 0.162 x 3½	(20) 0.148 x 1½	1,215	2,940	3,320	3,580	3,630	1,045	1,850	2,090	2,285	2,285	
HTU28 (Min.)	3⅞	1⅝	7 1/16	3½	(26) 0.162 x 3½	(14) 0.148 x 1½	1,110	3,770	3,770	3,770	3,770	955	2,825	2,825	2,825	2,825	
HTU28 (Max.)	7¼	1⅝	7 1/16	3½	(26) 0.162 x 3½	(26) 0.148 x 1½	1,920	3,820	4,315	4,655	5,015	1,695	2,865	3,235	3,490	3,765	
HTU210 (Min.)	3⅞	1⅝	9 1/16	3½	(32) 0.162 x 3½	(14) 0.148 x 1½	1,250	3,600	3,600	3,600	3,600	1,075	2,700	2,700	2,700	2,700	
HTU210 (Max.)	9¼	1⅝	9 1/16	3½	(32) 0.162 x 3½	(32) 0.148 x 1½	3,255	4,705	5,020	5,020	5,020	2,800	3,530	3,765	3,765	3,765	
Double 2x Sizes																	
HTU26-2 (Min.)	3⅞	3 5/16	5 7/16	3½	(20) 0.162 x 3½	(14) 0.148 x 3	1,515	2,940	3,320	3,500	3,500	1,305	2,205	2,205	2,205	2,205	IBC, FL, LA
HTU26-2 (Max.)	5½	3 5/16	5 7/16	3½	(20) 0.162 x 3½	(20) 0.148 x 3	1,910	2,940	3,320	3,500	3,500	1,645	2,205	2,205	2,205	2,205	
HTU28-2 (Min.)	3⅞	3 5/16	7 1/16	3½	(26) 0.162 x 3½	(14) 0.148 x 3	1,490	3,820	3,980	3,980	3,980	1,280	2,865	2,985	2,985	2,985	
HTU28-2 (Max.)	7¼	3 5/16	7 1/16	3½	(26) 0.162 x 3½	(26) 0.148 x 3	3,035	3,820	4,315	4,655	5,520	2,610	2,865	3,235	3,490	4,140	
HTU210-2 (Min.)	3⅞	3 5/16	9 1/16	3½	(32) 0.162 x 3½	(14) 0.148 x 3	1,755	4,255	4,255	4,255	4,255	1,510	3,190	3,190	3,190	3,190	
HTU210-2 (Max.)	9¼	3 5/16	9 1/16	3½	(32) 0.162 x 3½	(32) 0.148 x 3	3,855	4,705	5,310	5,730	6,470	3,315	3,530	3,980	4,300	4,855	

1. The maximum hanger gap is measured between the joist (or truss) end and the carrying member.
2. Minimum heel heights required for full table loads are based on a minimum 2:12 pitch.
3. Uplift loads have been increased for earthquake or wind loading with no further increase allowed. Reduce where other loads govern.
4. Wind (160) is a download rating.
5. For hanger gaps between ⅛" and ½", use the Alternative Allowable Loads.
6. Truss chord cross-grain tension may limit allowable loads in accordance with ANSI/TPI 1-2014. Simpson Strong-Tie® Connector Selector™ software includes the evaluation of cross-grain tension in its hanger allowable loads. For additional information, contact Simpson Strong-Tie.
7. Loads shown are based on a minimum two-ply 2x carrying member. For single 2x carrying members, use 0.148" x 1½" nails in the header and reduce the allowable download to 0.70 of the table value. The allowable uplift is 100% of the table load.
8. **Fasteners:** Nail dimensions are listed diameter by length. See pp. 21–22 for fastener information.

C-C-2021 ©2021 SIMPSON STRONG-TIE COMPANY INC.

Face-Mount Truss Hanger (cont.)

Options: See Hanger Options information on pp. 97–99.

Skewed Seat

- Skewable up to 67½°
- Available in single and two-ply size
- No bevel cut required

Allowable Loads for Skewed HTU Hangers

Model No.	Skew Angle (Degree)	Fasteners (in.)		DF/SP Allowable Loads		SPF/HF Allowable Loads	
		Carrying Member	Carried Member	Uplift (160)	Download (100/115/125)	Uplift (160)	Download (100/115/125)
HTU26	< 51	(20) 0.162 x 3½	(14) 0.148 x 1½	1,315	2,945	1,130	2,530
	51-67½	(20) 0.162 x 3½	(12) 0.148 x 1½	970	2,595	835	2,230
HTU28	< 51	(26) 0.162 x 3½	(20) 0.148 x 1½	2,015	3,060	1,730	2,630
	51-67½	(26) 0.162 x 3½	(17) 0.148 x 1½	1,485	2,815	1,280	2,420
HTU210	< 51	(32) 0.162 x 3½	(26) 0.148 x 1½	2,715	3,175	2,335	2,730
	51-67½	(32) 0.162 x 3½	(22) 0.148 x 1½	2,005	3,040	1,725	2,615
HTU26-2	< 51	(20) 0.162 x 3½	(14) 0.148 x 3	1,335	2,555	1,145	2,200
	51-67½	(20) 0.162 x 3½	(12) 0.148 x 3	1,110	2,700	955	2,320
HTU28-2	< 51	(26) 0.162 x 3½	(20) 0.148 x 3	2,470	3,890	2,120	3,345
	51-67½	(26) 0.162 x 3½	(17) 0.148 x 3	1,710	3,775	1,470	3,245
HTU210-2	< 51	(32) 0.162 x 3½	(26) 0.148 x 3	3,600	4,935	3,100	4,245
	51-67½	(32) 0.162 x 3½	(22) 0.148 x 3	2,255	4,790	1,940	4,120

1. Uplift loads have been increased for earthquake or wind loading with no further increase allowed. Reduce where other loads govern.
2. Allowable downloads may not be increased.
2. Maximum hanger gap between end of joist (truss) and face of carrying member is ⅛".
3. **Fasteners:** Nail dimensions are listed diameter by length. See pp. 21–22 for fastener information.

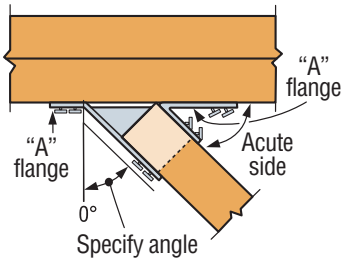

Top View HTU Hanger Skewed Right < 51°

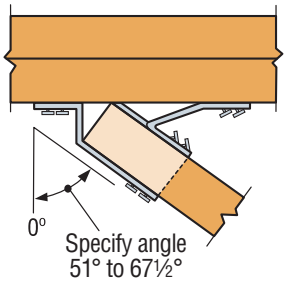

Top View HTU Hanger Skewed Right ≥ 51°

C-C-2021 ©2021 SIMPSON STRONG-TIE COMPANY INC.

WP/HWP/HWPH

Plated Truss Top-Flange Hangers

The WP hangers offer design flexibility and versatility supporting trusses off of wood or steel. WMU hangers are designed for use on standard 8" grouted masonry block wall construction.

Material: WP/HWP — 7-gauge top flange and 12-gauge stirrup; HWPH — 3-gauge top flange and 7-gauge stirrup

Finish: Simpson Strong-Tie gray paint; hot-dip galvanized available: specify HDG.

Installation:

- Use all specified fasteners.
- The WP may be used for weld-on applications. The minimum size weld is a 1½" long fillet weld to each side of the top flange; weld size to match hanger material thickness. See p. 18 note k for weld information. Weld-on applications have the maximum allowable capacity listed. Uplift loads do not apply to this application.
- Hangers can support multi-ply carried members; the individual members must be secured together to work as a single unit before installation into the hanger.

Options:

- For hanger modification options, see table on p. 129
- For skewed trusses using the WP hanger, order the Type B stirrup for proper bearing
- For 4x2 trusses, the ANP nail pattern may be ordered with WP hangers, which will relocate the joist nails to the top and bottom chords
- For concrete and masonry applications, see pp. 240–241 for WMU top-flange hanger.

Codes: See p. 11 for Code Reference Key Chart

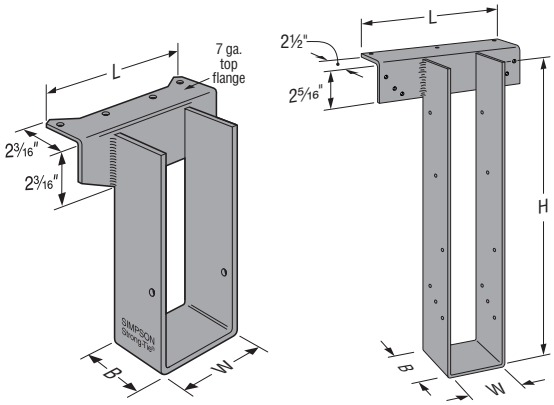

WP

HWP
(HWPH similar)

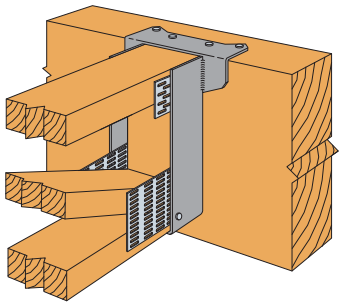

Typical WP Installation for 4x2 Truss

Model	Stirrup Width (W) (in.)	Top Flange Length (L) (in.)
WP	1 9⁄16 – 3 5⁄8	7
	3 11⁄16 – 7 1⁄8	8
	7 3⁄16 – 7 1⁄2	10
HWP	1 9⁄16 – 5 5⁄8	10
	5 11⁄16 – 7 1⁄8	12
HWPH	1 13⁄16 – 3 3⁄4	10
	3 13⁄16 – 6 3⁄4	12
	6 13⁄16 – 7 1⁄2	14

Nailer Table

The table indicates the maximum allowable loads for WP, HWP and HWPH hangers used on wood nailers. Nailers are wood members attached to the top of a steel I-beam, concrete or masonry wall.

Model	Nailer	Top Flange Nailing (in.)	Uplift (160)	Allowable Down Loads		
				DF/SP	SPF/HF	LSL
WP	2x	(4) 0.148 x 1½	—	2,465	1,985	3,150
	(2) 2x	(4) 0.148 x 2½	—	2,985	2,230	—
	3x or 4x	(4) 0.162 x 2½	—	2,985	2,230	3,375
HWP	(2) 2x	(3) 0.148 x 3	710	4,415	3,860	—
	3x	(3) 0.162 x 2½	970	4,415	3,860	—
	4x	(3) 0.162 x 2½	1,535	4,920	3,860	—
HWPH	(2) 2x	(4) 0.162 x 2½	710	5,910	4,820	—
	3x	(4) 0.162 x 2½	970	5,970	5,125	—
	4x	(4)0.162 x 3½	1,550	5,970	5,125	—

1. Attachment of nailer to supporting member is the responsibility of the designer.
2. Uplift loads are based on DF/SP lumber. For SPF/HF, use 0.86 x DF/SP uplift load.

These products are available with additional corrosion protection. For more information, see p. 14.

Various Headers

Model	Joist (in.)		Fasteners (in.)			Allowable Loads Header Type								Code Ref.
	Width[4]	Depth	Top	Face	Joist	Uplift (160)	LVL	PSL	LSL	DF/SP	SPF/HF	I-Joist	GFCMU	
WP	1½ to 7½	5⅜ to 30	(4) 0.148 x 1½	—	(2) 0.148 x 1½	—	2,935	3,150	—	2,465	1,985	2,030	—	—
	1½ to 7½	5⅜ to 30	(4) 0.148 x 1½	—	(2) 0.148 x 1½	—	2,935	3,150	3,150	2,985	2,230	—	—	IBC, FL, LA
	1½ to 7½	5⅜ to 30	(4) 0.162 x 2½	—	(2) 0.148 x 1½	—	3,095	3,605	3,605	2,985	2,230	—	—	
HWP	1½ to 7	6 to 15⅝	(3) 0.162 x 3½	(6) 0.162 x 3½	(10) 0.148 x 1½	1,535	3,995	4,500	4,350	3,955	3,955	—	—	
	1½ to 7	15¾ to 32	(3) 0.162 x 3½	(6) 0.162 x 3½	(12) 0.148 x 1½	1,560	3,995	4,500	4,350	3,955	3,955	—	—	
HWPH	2½ to 7½	6 to 15⅝	(4) 0.162 x 3½	(8) 0.162 x 3½	(10) 0.148 x 1½	1,685	6,595	7,025	5,450	5,920	4,740	—	—	
	2½ to 7½	15¾ to 32	(4) 0.162 x 3½	(8) 0.162 x 3½	(12) 0.148 x 1½	2,075	6,595	7,025	5,450	5,920	4,740	—	—	

1. Uplift loads have been increased for earthquake or wind loading with no further increase allowed. Reduce where other loads govern.
2. Joist dimensions do not include truss plate thickness.
3. **Fasteners:** Nail dimensions are listed diameter by length. See pp. 21–22 for fastener information.

C-C-2021 ©2021 SIMPSON STRONG-TIE COMPANY INC.

HHSUQ

Heavy Severe Skew Truss Hanger

The HHSUQ is a high-load, face-mount, truss-to-truss hanger designed to accommodate severe skews (45°–84°) for hip trusses, enabling a greater range of installation applications. Fastening the HHSUQ with Strong-Drive® SDS Heavy-Duty Connector screws makes installation fast and easy, while eliminating the inconvenience of bolted applications.

Material: Back plate — 3 gauge; stirrup — 7 gauge

Finish: Simpson Strong-Tie gray paint

Installation: • Use all specified fasteners; see General Notes.

- The joist/truss end may be square cut or bevel cut. 3⅞" minimum heel height.
- Strong-Drive SDS Heavy-Duty Connector screws supplied for all round holes.
- All multiple members must be fastened together to act as a single unit.

To Order: Left or right skew must be specified.

Codes: See p. 11 for Code Reference Key Chart

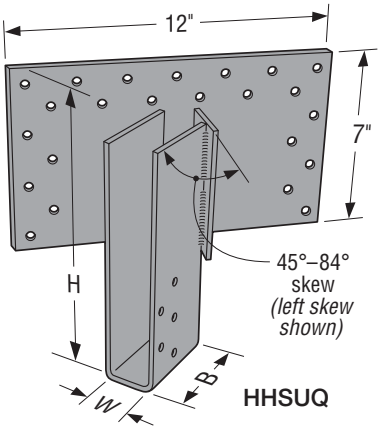

Model No.	Dimensions (in.)			SDS Fasteners		DF/SP Allowable Loads				SPF/HF Allowable Loads				Code Ref.
	W	H	B	Face	Joist	Uplift (160)	Floor (100)	Snow (115)	Roof (125)	Uplift (160)	Floor (100)	Snow (115)	Roof (125)	
HHSUQ28-SDS	1⅝	7¼	3½	(23) ¼" x 3"	(5) ¼" x 1½"	1,170	4,215	4,405	4,530	1,005	3,025	3,160	3,250	—
HHSUQ28-2-SDS	3 5/16	7¼	3½	(23) ¼" x 3"	(5) ¼" x 3"	1,250	5,065	5,065	5,065	1,075	5,065	5,065	5,065	
HHSUQ210-SDS	1⅝	9¼	3½	(23) ¼" x 3"	(5) ¼" x 1½"	1,170	4,215	4,405	4,530	1,005	3,025	3,160	3,250	
HHSUQ210-2-SDS	3 5/16	9¼	3½	(23) ¼" x 3"	(5) ¼" x 3"	1,250	5,065	5,065	5,065	1,075	5,065	5,065	5,065	
HHSUQ212-SDS	1⅝	11¼	3½	(23) ¼" x 3"	(5) ¼" x 1½"	1,170	4,215	4,405	4,530	1,005	3,025	3,160	3,250	
HHSUQ212-2-SDS	3 5/16	11¼	3½	(23) ¼" x 3"	(5) ¼" x 3"	1,250	5,065	5,065	5,065	1,075	5,065	5,065	5,065	
HHSUQ214-SDS	1⅝	13¼	3½	(23) ¼" x 3"	(5) ¼" x 1½"	1,170	4,215	4,405	4,530	1,005	3,025	3,160	3,250	
HHSUQ48-SDS	3⅝	7¼	3½	(23) ¼" x 3"	(5) ¼" x 3"	1,250	5,065	5,065	5,065	1,075	5,065	5,065	5,065	
HHSUQ410-SDS	3⅝	9¼	3½	(23) ¼" x 3"	(5) ¼" x 3"	1,250	5,065	5,065	5,065	1,075	5,065	5,065	5,065	
HHSUQ412-SDS	3⅝	11¼	3½	(23) ¼" x 3"	(5) ¼" x 3"	1,250	5,065	5,065	5,065	1,075	5,065	5,065	5,065	
HHSUQ414-SDS	3⅝	13¼	3½	(23) ¼" x 3"	(5) ¼" x 3"	1,250	5,065	5,065	5,065	1,075	5,065	5,065	5,065	
HHSUQ1.81/7-SDS	1 13/16	7¼	3½	(23) ¼" x 3"	(5) ¼" x 1½"	1,170	5,065	5,065	5,065	1,005	5,065	5,065	5,065	
HHSUQ1.81/9-SDS	1 13/16	9½	3½	(23) ¼" x 3"	(5) ¼" x 1½"	1,170	5,065	5,065	5,065	1,005	5,065	5,065	5,065	
HHSUQ1.81/11-SDS	1 13/16	11⅞	3½	(23) ¼" x 3"	(5) ¼" x 1½"	1,170	5,065	5,065	5,065	1,005	5,065	5,065	5,065	

1. Uplift loads have been increased for earthquake or wind loading with no further increase allowed. Reduce where other loads govern.
2. Strong-Drive® SDS Heavy-Duty Connector screws that penetrate all plies of the supporting girder (screws must penetrate a minimum of 1" into the last truss ply) may also be used to transfer the load through all the plies of the supporting girder. When SDS Heavy-Duty Connector screws do not penetrate all plies of the supporting girder truss, supplemental SDS screws at the hanger locations may be required to transfer the load to the truss plies not penetrated by the face fasteners, as determined by the designer. 3"-long SDS screws in the face may be replaced with 4½"- or 6"-long SDS screws with no load reduction.
3. Loads shown are based on a minimum two-ply 2x8 carrying member. For single 2x carrying members, replace 3"-long Strong-Drive® SDS Heavy-Duty Connector screws with 1½"-long SDS screws and reduce the allowable download to 2,630 lb. for DF/SP and 1,895 lb. for SPF/HF. The tabulated allowable uplift load is not reduced.
4. Girders must have adequate lateral bracing to prevent excessive displacement due to secondary torsional stresses. (Refer to ANSI/TPI 1-2014, Section 7.5.3.5.)
5. Truss chord cross-grain tension may limit allowable loads. Designer to refer to ANSI/TPI, Section 7.5.3.2 for connection details, limitations, and reductions.
6. Strong-Drive® SDS Heavy-Duty Connector screws may be installed through metal truss plates as approved by the Truss Designer, provided the requirements of ANSI/TPI 1-2014, Sections 7.5.3.4 and 8.9.2 are met (predrilling required through the plate using a 5/32" bit maximum).
7. For installations into LSL or PSL, use DF/SP table loads.
8. **Fasteners:** SDS screws are Simpson Strong-Tie® Strong-Drive® SDS Heavy-Duty Connector screws. See pp. 21–22 for fastener information.

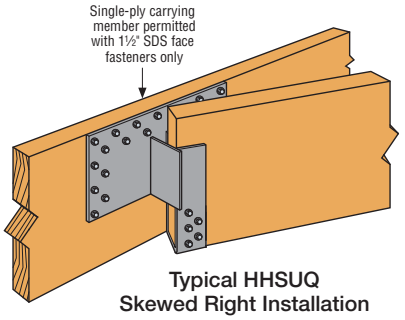

Typical HHSUQ
Skewed Right Installation

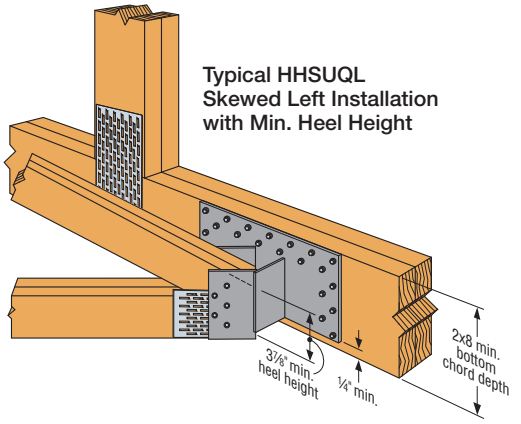

Typical HHSUQL
Skewed Left Installation
with Min. Heel Height

C-C-2021 ©2021 SIMPSON STRONG-TIE COMPANY INC.

LTHMA

Light-Duty Multiple-Truss Hanger

A light-capacity hanger designed to carry two or three trusses in a terminal hip installation.

Material: 16 gauge

Finish: Galvanized

Installation:

- Use all specified fasteners; see General Notes
- The total load must be symmetrically distributed about the centerline to avoid eccentric loading of the connector
- Fill round holes for girder trusses with 2x4 bottom chords
- Fill round and triangle holes for girder trusses with 2x6 bottom chords

Codes: See p. 11 for Code Reference Key Chart

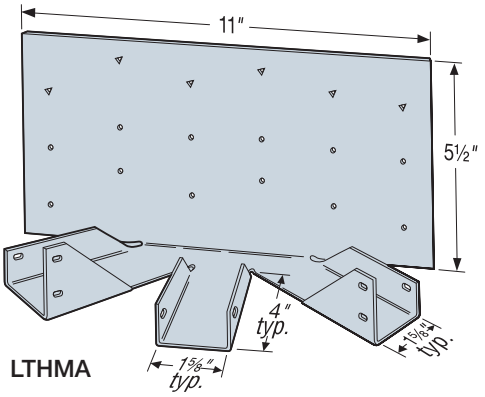

Model No.	Header	Fasteners (in.)			DF/SP Allowable Loads												Code Ref.
		Header	Hips (Total)	Jack	Uplift (160)			Floor (100)			Snow (115)			Roof (125/160)			
					Hip	Jack	Total	Hip	Jack	Total	Hip	Jack	Total	Hip	Jack	Total	
LTHMA	1-ply 2x4	(12) 0.148 x 1½	(6) 0.148 x 1½	(2) 0.148 x 1½	65	15	140	655	150	1,460	660	155	1,475	660	155	1,475	IBC, FL
	2-ply 2x4	(12) 0.148 x 3	(6) 0.148 x 1½	(2) 0.148 x 1½	65	15	140	660	140	1,460	700	160	1,560	700	160	1,560	
	1-ply 2x6	(18) 0.148 x 1½	(6) 0.148 x 1½	(2) 0.148 x 1½	65	15	140	685	155	1,525	685	155	1,525	685	155	1,525	
	2-ply 2x6	(18) 0.148 x 3	(6) 0.148 x 1½	(2) 0.148 x 1½	85	25	195	985	220	2,190	1,085	245	2,415	1,085	245	2,415	

See footnotes below.

Model No.	Header	Fasteners (in.)			SPF/HF Allowable Loads												Code Ref.
		Header	Hips (Total)	Jack	Uplift (160)			Floor (100)			Snow (115)			Roof (125/160)			
					Hip	Jack	Total	Hip	Jack	Total	Hip	Jack	Total	Hip	Jack	Total	
LTHMA	1-ply 2x4	(12) 0.148 x 1½	(6) 0.148 x 1½	(2) 0.148 x 1½	55	10	120	565	125	1,255	570	125	1,270	570	125	1,270	—
	2-ply 2x4	(12) 0.148 x 3	(6) 0.148 x 1½	(2) 0.148 x 1½	55	10	120	565	125	1,255	605	135	1,340	605	135	1,340	
	1-ply 2x6	(18) 0.148 x 1½	(6) 0.148 x 1½	(2) 0.148 x 1½	55	10	120	590	130	1,310	590	130	1,310	590	130	1,310	
	2-ply 2x6	(18) 0.148 x 3	(6) 0.148 x 1½	(2) 0.148 x 1½	100	25	225	850	190	1,890	965	215	2,140	1,035	230	2,305	

1. Allowable loads have been increased for wind or earthquake loading with no further increase allowed. Reduce where other loads govern.
2. Hip loads are for each hip.
3. Load distribution is 45% for each hip and 10% for jack. Other hip-jack load distributions are allowed if the load sum for all three carried members does not exceed the total load and the hip members are equally loaded.
4. Truss chord cross-grain tension may limit allowable loads in accordance with ANSI/TPI 1-2014. Simpson Strong-Tie® Connector Selector™ software includes the evaluation of cross-grain tension in its hanger allowable loads. For additional information, contact Simpson Strong-Tie.
5. **Fasteners:** Nail dimensions are listed diameter by length. See pp. 21–22 for fastener information.

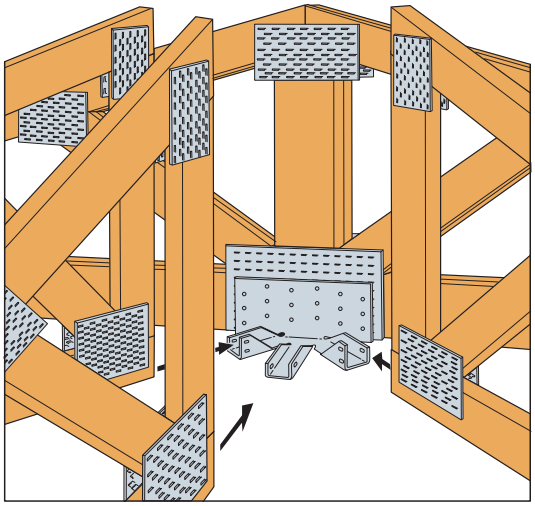

Typical LTHMA Installation

C-C-2021 ©2021 SIMPSON STRONG-TIE COMPANY INC.

TJC

Jack Truss Connector

TJC is a versatile connector for jack trusses. Adjustable from 0 to 85 degree (shipped with 67.5 degree bend). Nail hole locations allow for easy installation. Minimum nailing option on TJC37 provides faster installation and lower installed cost.

Material: 16 gauge

Finish: Galvanized

Installation:

- Use all specified fasteners; see General Notes.
- TJC37 can be installed filling round holes only, or filling round and triangle holes for maximum values.
- To reduce the potential for splitting, install the TJC with a minimum 3⁄16" edge distance on the chord members.
- Position the jack truss on the inside of the bend line with the end of the jack truss flush with the bend line.
- Bend the TJC to the desired position (one bend cycle only).
- No bevel cut required.
- Attachment of TJC to the top chord requires the designer to check connection geometry for placement on both carried and carrying chord members. See Top Chord Member Sizes table on p. 209 for suggested chord sizes.
- Supported jack member is a single 2x.

Codes: See p. 11 for Code Reference Key Chart

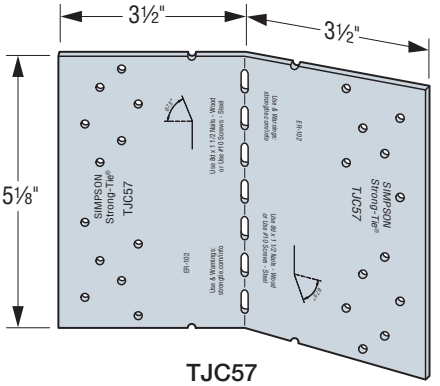

TJC57

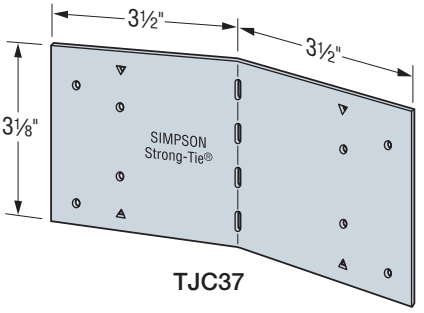

TJC37

Standard Installation

Model No.	Fasteners (in.)		Allowable Loads								Code Ref.
	Carrying Member	Carried Member	DF/SP				SPF/HF				
			0°	1°– 60°	61°– 67.5°	68°– 85°	0°	1°– 60°	61°– 67.5°	68°– 85°	
TJC37 (Min.)	(4) 0.131 x 1½	(4) 0.131 x 1½	340	265	305	250	290	230	260	215	IBC, FL, LA
TJC37 (Max.)	(6) 0.131 x 1½	(6) 0.131 x 1½	510	425	375	375	440	365	325	325	
TJC57	(12) 0.131 x 1½	(12) 0.131 x 1½	825	785	750	750	710	675	645	645	
	(12) #9 x 1½" SD	(12) #9 x 1½" SD	1,120	985	995	985	965	845	855	845	

See footnotes on p. 209.

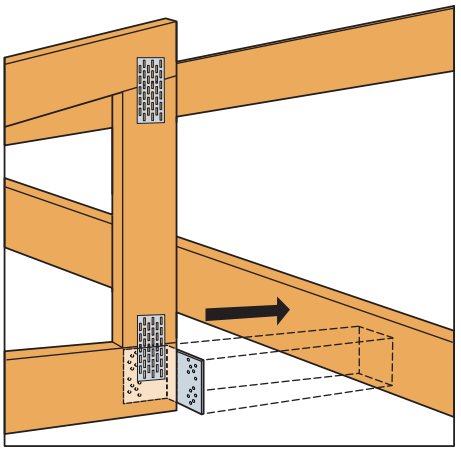

Typical TJC57 Standard Installation
(TJC37 similar)

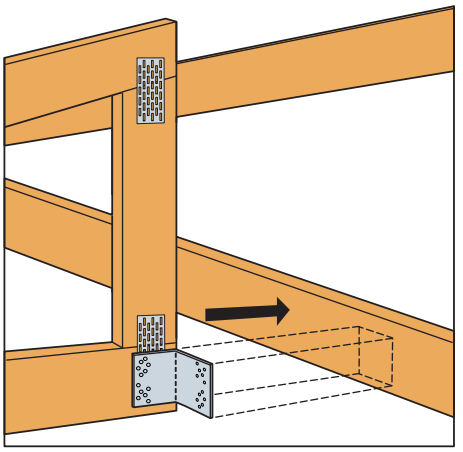

Typical TJC57 Alternate Installation
(TJC37 similar)

C-C-2021 ©2021 SIMPSON STRONG-TIE COMPANY INC.

Jack Truss Connector (cont.)

Alternate Installation

Model No.	Fasteners (in.)		Allowable Loads			
	Carrying Member	Carried Member	DF/SP		SPF/HF	
			0°	1°–45°	0°	1°–45°
TJC37 (Alt. min.)	(4) 0.131 x 1½	(4) 0.131 x 1½	255	225	220	195
TJC37 (Alt. max.)	(6) 0.131 x 1½	(6) 0.131 x 1½	435	365	375	310
TJC57 (Alt.)	(12) 0.131 x 1½	(12) 0.131 x 1½	785	740	675	635

1. Loads may not be increased for duration of load.
2. Allowable loads are for upward or downward direction.
3. TJC37 and TJC57 require single-ply carried members with minimum 2x4 and 2x6 chord members, respectively.
4. For back-to-back installation on a single-ply girder/hip member, use a 0.70 reduction of table loads.
5. **Fasteners:** Nail dimensions are listed diameter by length. SD screws are Simpson Strong-Tie® Strong-Drive® SD Connector screws. See pp. 21–22 for fastener information.

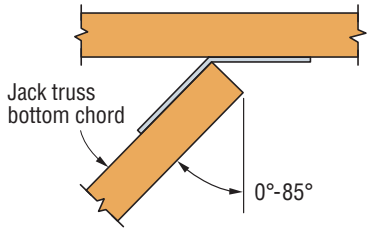

Standard Installation Top View

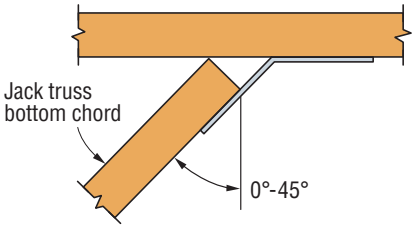

Alternate Installation Top View

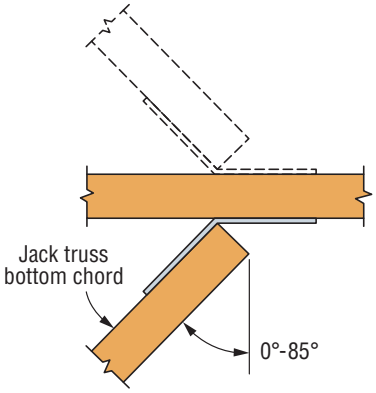

For back-to-back installation, see footnote 4.

Top Chord Member Sizes

Part	Pitch		
	≤ 3:12	≤ 7:12	≤ 12:12
TJC37	2x6	2x6	2x8
TJC57	2x8	2x8	2x10

C-C-2021 ©2021 SIMPSON STRONG-TIE COMPANY INC.

THJU

Multiple-Truss Hip/Jack Hanger

The THJU hip/jack hanger offers the most flexibility and ease of installation without sacrificing performance. The U-shaped hanger works for right- and left-hand hips and can be ordered to fit a range of hip skews (up to 67½°) as well as various single and 2-ply hip/jack combinations. Also can be installed before or after the hip and jack.

THJU26 is sized for the standard hip/jack combination with a 45° left- or right-hand hip. The wide seat of THJU26-W accommodates a 2-ply hip and 2-ply jack combination with a 45° maximum hip skew, or a standard single-ply hip/jack configuration with a maximum 67½° hip skew. Intermediate seat widths are available for other hip/jack or hip/hip combinations.

Material: 12 gauge

Finish: Galvanized

Installation:

- Use all specified fasteners; see General Notes

Options:

- THJU is available in intermediate seat widths between 5⅛" (THJU26 width) and 8⅛" (THJU26-W width) with no load reduction.
- For double-hip installation, divide the total allowable load by 2 to determine the allowable load for each hip. Order as THJU26X and specify width; see table for reference.
- Allowable download and uplift for all intermediate widths is 100% of the THJU26-W table loads.

Codes: See p. 11 for Code Reference Key Chart

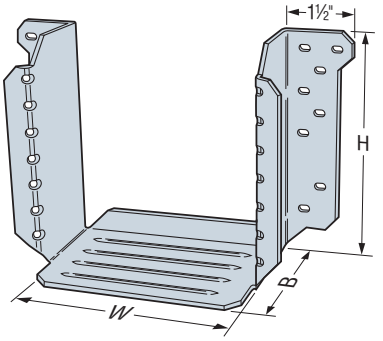

THJU26

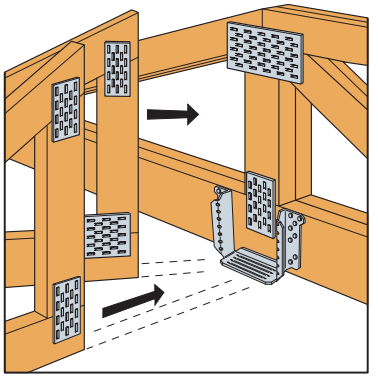

Typical THJU26 Installation

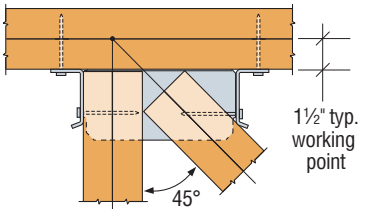

THJU26-W Top View
Two-Ply Hip / Two-Ply Jack Installation

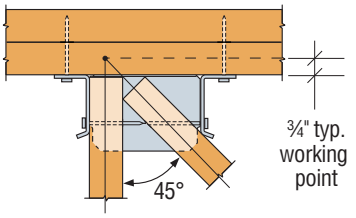

THJU26 Top View
Right-Hand Hip Installation

THJU Intermediate Width Options

Carried Member Combination	Hip Skew	Width (W)
2-ply hip and single-ply jack	45°	6⅜
Single-ply hip and 2-ply jack	45°	6¾
Double (terminal) hip	45°	7⅜
2-ply hip and 2-ply jack	45°	Use THJU26-W
Single-ply hip and single-ply jack	44°– 46°	Use THJU26
	47°– 49°	5½
	50°– 52°	5¾
	53°– 55°	6
	56°– 57°	6⅜
	58°– 59°	6⅝
	60°– 61°	7
	62°– 63°	7⅜
	64°– 65°	Use THJU26-W

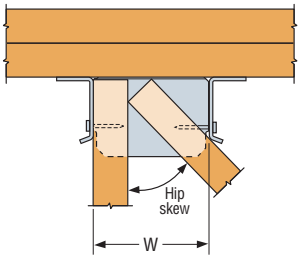

THJU Top View Installation

Model No.	Min. Carried Member	Dimensions (in.)			Fasteners (in.)			DF/SP Allowable Loads					SPF/HF Allowable Loads					Code Ref.
		W	H	B	Carrying Member	Hip	Jack	Uplift (160)	Download Floor (100)	Download Snow (115)	Download Roof (125)	Download Wind (160)	Uplift (160)	Download Floor (100)	Download Snow (115)	Download Roof (125)	Download Wind (160)	
THJU26	2x4	5⅛	5⅜	3½	(16) 0.148 x 3	(4) 0.148 x 3	(4) 0.148 x 3	780	1,915	1,915	1,915	1,915	670	1,645	1,645	1,645	1,645	IBC, FL
	2x6 or end. vert.[3]				(16) 0.148 x 3	(7) 0.148 x 3	(7) 0.148 x 3	1,310	2,255	2,350	2,350	2,350	1,125	1,935	2,020	2,020	2,020	
THJU26-W	2x4	8⅛	5⅜	3½	(16) 0.148 x 3	(4) 0.148 x 3	(4) 0.148 x 3	685	1,825	1,825	1,825	1,825	590	1,570	1,570	1,570	1,570	
	2x6 or end. vert.[3]				(16) 0.148 x 3	(7) 0.148 x 3	(7) 0.148 x 3	1,240	1,965	1,965	1,965	1,965	1,065	1,690	1,690	1,690	1,690	

1. Tabulated loads are the total allowable loads of the hip and jack members combined; 65%–85% of the total load shall be distributed to the hip member, and the remaining percentage of the total load shall be distributed to the jack. The combined hip and jack load may not exceed the published total load.
2. Uplift loads have been increased for earthquake or wind loading with no further increase allowed. Reduce where other loads govern.
3. For full load, the jack requires either a minimum 2x6 bottom chord or a minimum 2x4 end vertical; the hip requires either a minimum 2x6 bottom chord or a minimum 2x6 end vertical for hip skews up to 60°. For hip skews greater than 60° (THJU26-W only), a minimum 2x6 bottom chord or minimum 2x8 end vertical is required.
4. With single 2x carrying members, use 0.148" x 1½" nails and use 100% of the table value.
5. For single 2x jacks, 0.148" x 1½" nails may be substituted for the specified 0.148" x 3" with no reduction in load.
6. Truss chord cross-grain tension may limit allowable loads in accordance with ANSI/TPI 1-2014. Simpson Strong-Tie® Connector Selector™ software includes the evaluation of cross-grain tension in its hanger allowable loads. For additional information, contact Simpson Strong-Tie.
7. **Fasteners:** Nail dimensions are listed diameter by length. See pp. 21–22 for fastener information.

C-C-2021 ©2021 SIMPSON STRONG-TIE COMPANY INC.

THJA26/LTHJA26

Multiple-Truss Hip/Jack Hanger

This product is preferable to similar connectors because of (a) easier installation, (b) higher loads, (c) lower installed cost, or a combination of these features.

The versatile THJA26 can accommodate right- or left-hand hips (at 45-degree skews), and can be installed before or after the hip and jack. Can also be used for double (terminal) hips.

The LTHJA26 is a lighter-capacity version of the THJA26 and offers the lowest-cost alternative for light hip/jack load applications.

Material: THJA26 — 14 gauge; LTHJA26 — 18 gauge

Finish: Galvanized

Installation:

- Use all specified fasteners; see General Notes.
- All multiple members must be fastened together to act as a single unit.
- Shall be attached to a double girder truss to allow for required minimum nail penetration. See footnote 3.
- LTHJA26 only: 0.148" x 1½" nails must be installed into bottom of hip members through bottom of hanger seat for table loads.

Options:

- These hangers cannot be modified

Codes: See p. 11 for Code Reference Key Chart

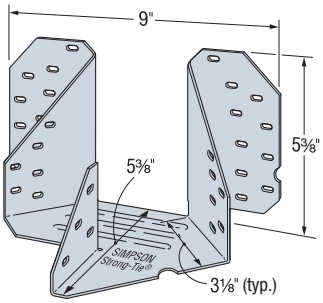

THJA26

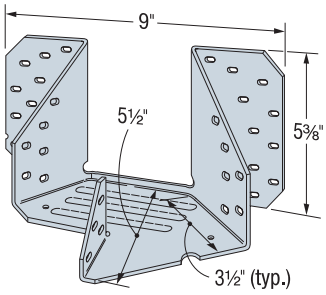

LTHJA26
US Patent 7,913,472

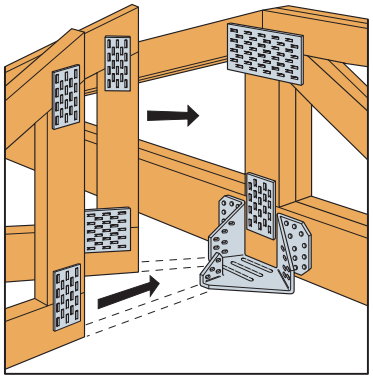

Typical THJA26 Installation
(LTHJA26 similar)

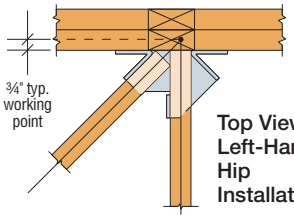

Top View Left-Hand Hip Installation

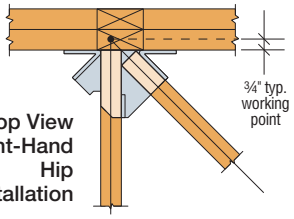

Top View Right-Hand Hip Installation

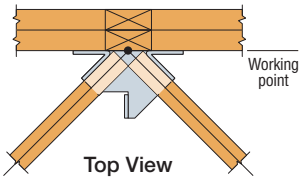

Top View Terminal Hip without Center Common Jack

Model No.	Carried Member Combination	Fasteners (in.)			Carried Member	DF/SP Allowable Loads					SPF/HF Allowable Loads					Code Ref.
		Carrying Member	Hip (each)	Jack		Uplift (160)	Floor (100)	Snow (115)	Roof (125)	Wind (160)	Uplift (160)	Floor (100)	Snow (115)	Roof (125)	Wind (160)	
LTHJA26	Side hip and center jack	(20) 0.148 x 3	(7) 0.148 x 1½	(4) 0.148 x 1½	Hip	220	845	845	845	845	185	710	710	710	710	IBC, FL
					Jack	75	280	280	280	280	65	235	235	235	235	
					Hip and jack	295	1,125	1,125	1,125	1,125	250	945	945	945	945	
	Double (terminal) hip	(20) 0.148 x 3	(7) 0.148 x 1½	—	Hip (each)	285	630	630	630	630	240	530	530	530	530	
					Two hips	565	1,260	1,260	1,260	1,260	475	1,060	1,060	1,060	1,060	
THJA26	Side hip and center jack	(20) 0.162 x 3½	(6) 0.148 x 1½	(4) 0.148 x 1½	Hip	685	1,890	2,130	2,205	2,205	575	1,590	1,790	1,850	1,850	
					Jack	230	630	710	735	735	195	530	595	615	615	
					Hip and jack	915	2,520	2,840	2,940	2,940	770	2,115	2,385	2,470	2,470	
	Double (terminal) hip	(20) 0.162 x 3½	(6) 0.148 x 1½	—	Hip (each)	460	1,260	1,420	1,470	1,470	385	1,060	1,195	1,235	1,235	
					Two hips	915	2,520	2,840	2,940	2,940	770	2,115	2,385	2,470	2,470	

1. Uplift loads have been increased for earthquake or wind loading with no further increase allowed. Reduce where other loads govern.
2. Wind (160) is a download rating.
3. Loads shown are based on a minimum (2) 2x6 carrying member. For single 2x carrying members (min. 2x6), use 0.148" x 1½" nails and use 0.67 of the table value. For (2) 2x4 carrying members, multiply the download by 0.50.
4. Tabulated hip and jack allowable loads assume that 75% of the total load is distributed to the hip and 25% to the jack. It is permitted to distribute 65% to 85% of the tabulated total load to the hip, and the remaining percentage of total load to the jack. The combined hip and jack load may not exceed the published Total Load.
5. Truss chord cross-grain tension may limit allowable loads in accordance with ANSI/TPI 1-2014. Simpson Strong-Tie® Connector Selector™ software includes the evaluation of cross-grain tension in its hanger allowable loads. For additional information, contact Simpson Strong-Tie.
6. **Fasteners:** Nail dimensions are listed diameter by length. See pp. 21–22 for fastener information.

C-C-2021 ©2021 SIMPSON STRONG-TIE COMPANY INC.

MTHMQ/MTHMQ-2

Medium-Duty Multiple-Truss Hangers

The MTHMQ and MTHMQ-2 are designed for carrying two or three trusses. The design offers concealed flanges and installs with Strong-Drive® SDS Heavy-Duty Connector screws (included) for easier installation.

Material: 12 gauge

Finish: Galvanized (G90)

Installation:

- Use all specified fasteners; see General Notes.
- Can be installed filling round holes only, or filling round and triangle holes for maximum load. For all installations, fill the fastener holes in the bottom of the hanger seat.
- For installations at panel points with 2x6 bottom chords, do not fill the triangle holes unless approved by the Truss Designer.

Codes: See p. 11 for Code Reference Key Chart

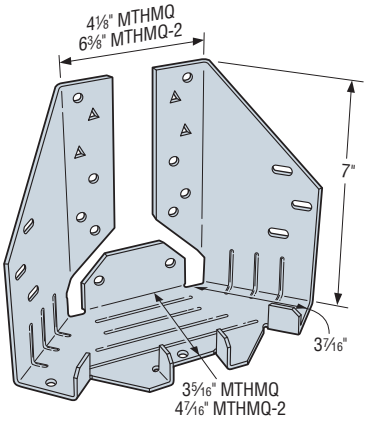

MTHMQ-SDS3
(MTHMQ-2-SDS3 similar)

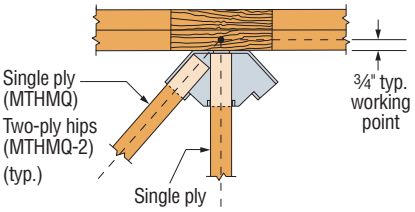

MTHMQ Top View
Left Hand Hip Installation
(MTHMQ-2 similar)

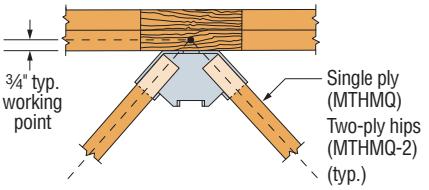

MTHMQ Top View
Terminal Installation without
Center Common Jack
(MTHMQ-2 similar)

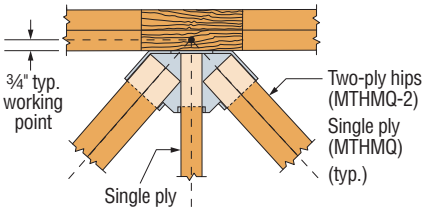

MTHMQ-2 Top View
Terminal Installation with
Center Common Jack
(MTHMQ similar)

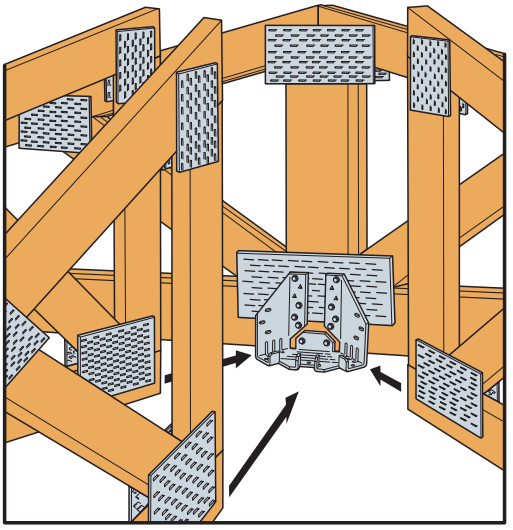

Typical MTHMQ Min. Installation
at Panel Point

C-C-2021 ©2021 SIMPSON STRONG-TIE COMPANY INC.

MTHMQ/MTHMQ-2

Medium-Duty Multiple-Truss Hangers (cont.)

Right or Left Hand Hip Installation (Two-Member Connection)

Model No.	Min. Carrying Member	SDS Fasteners			DF/SP Allowable Loads						SPF/HF Allowable Loads						Code Ref.
		Carrying Member	Hip	Jack	Uplift (160)			Download (100/115/125/160)			Uplift (160)			Download (100/115/125/160)			
					Hip	Jack	Total	Hip	Jack	Total	Hip	Jack	Total	Hip	Jack	Total	
MTHMQ-SDS3 (Min.)	(2) 2x6	(10) ¼" x 3"	(4) ¼" x 3"	(1) ¼" x 3"	440	145	585	1,965	655	2,620	315	105	420	1,415	470	1,885	—
MTHMQ-SDS3 (Max.)	(2) 2x8	(14) ¼" x 3"	(4) ¼" x 3"	(1) ¼" x 3"	440	145	585	2,715	905	3,620	315	105	420	1,955	650	2,605	
MTHMQ-2-SDS3 (Min.)	(2) 2x6	(12) ¼" x 3"	(5) ¼" x 3"	(1) ¼" x 3"	800	265	1,065	2,905	970	3,875	575	190	765	2,090	700	2,790	
MTHMQ-2-SDS3 (Max.)	(2) 2x8	(16) ¼" x 3"	(5) ¼" x 3"	(1) ¼" x 3"	800	265	1,065	3,330	1,110	4,440	575	190	765	2,395	800	3,195	

See footnotes below.

Terminal Type Installation (Three-Member Connection)[5]

Model No.	Min. Carrying Member[2,3]	SDS Fasteners			DF/SP Allowable Loads						SPF/HF Allowable Loads						Code Ref.
		Carrying Member	Hips (Total)	Jack	Uplift (160)			Download (100/115/125/160)			Uplift (160)			Download (100/115/125/160)			
					Hip (Ea.)	Jack	Total	Hip (Ea.)	Jack	Total	Hip (Ea.)	Jack	Total	Hip (Ea.)	Jack	Total	
MTHMQ-SDS3 (Min.)	(2) 2x6	(10) ¼" x 3"	(8) ¼" x 3"	(1) ¼" x 3"	505	250	1,260	1,470	730	3,670	360	185	905	1,055	530	2,640	—
MTHMQ-SDS3 (Max.)	(2) 2x8	(14) ¼" x 3"	(8) ¼" x 3"	(1) ¼" x 3"	505	250	1,260	1,985	995	4,965	360	185	905	1,430	715	3,575	
MTHMQ-2-SDS3 (Min.)	(2) 2x6	(12) ¼" x 3"	(10) ¼" x 3"	(1) ¼" x 3"	685	340	1,710	2,015	1,010	5,040	490	250	1,230	1,450	730	3,630[7]	
MTHMQ-2-SDS3 (Max.)	(2) 2x8	(16) ¼" x 3"	(10) ¼" x 3"	(1) ¼" x 3"	685	340	1,710	2,655	1,330	6,640	490	250	1,230	1,910	960	4,780	

1. Allowable loads have been increased for wind or earthquake loading with no further increase allowed. Reduce where other loads govern.
2. A minimum two-ply carrying member is required for the tabulated loads. With single 2x carrying members, use ¼" x 1½" Strong-Drive® SDS Heavy-Duty Connector screws in the carrying member and reduce the load to 0.60 of the table value.
3. For installations on 2x6 carrying members not at a panel point, the four uppermost face fasteners are not installed. For installations on 2x6 carrying members at a panel point, fasteners are installed into the round holes only (minimum vertical member sizes are 2x6 and 2x8 for the MTHMQ and MTHMQ-2, respectively).
4. Tabulated two-member allowable loads assume that 75% of the total load is distributed to the hip and 25% to the jack. It is permitted to distribute 65% to 85% of the tabulated total load to the hip, and the remaining percentage of total load to the jack. The combined hip and jack load may not exceed the published Total Load.
5. For terminal hips, divide the total allowable load by 2 to determine the allowable load for each hip.
6. Tabulated three-member loads assume that each hip carries 40% of the total load and the jack carries 20% of the total load. Other hip-jack load distributions are allowed if the load sum for all three carried members does not exceed the total load and the hip members are equally loaded.
7. Where noted in the table, the total allowable download for the MTHMQ-2-SDS3 (min.) for a three-member connection at the 115/125/160 load duration is 5,400 lb. (DF/SP) and 3,890 lb. (SPF/HF).
8. Truss chord cross-grain tension may limit allowable loads in accordance with ANSI/TPI 1-2014. Simpson Strong-Tie® Connector Selector™ software includes the evaluation of cross-grain tension in its hanger allowable loads. For additional information, contact Simpson Strong-Tie.
9. Strong-Drive® SDS Heavy-Duty Connector screws may be installed through metal truss plates as approved by the Truss Designer, provided the requirements of ANSI/TPI 1-2014, Sections 7.5.3.4 and 8.9.2 are met (predrilling required through the plate using a 5/32" bit maximum).
10. **Fasteners:** SDS screws are Simpson Strong-Tie® Strong-Drive SDS Heavy-Duty Connector screws. See pp. 21–22 for fastener information.

C-C-2021 ©2021 SIMPSON STRONG-TIE COMPANY INC.

THJM

Multiple-Truss Hip/Jack Hanger

The THJM is a non-welded hanger designed to carry radial-end jack framing and provide optimal efficiency for those multi-plane, angled bay roofs over breakfast, study and library alcoves. The unique patent pending design of the THJM accommodates 2x4 girder bottom chords and uses our Strong-Drive® SDS Heavy-Duty Connector screws for easy installation with minimal fasteners.

Features:

- The THJM hangers are designed for installation with ¼" x 3" Strong-Drive SDS Heavy-Duty Connector screws that are included with the parts.
- The THJM2-4-SDS3 is designed for four incoming jack trusses with the outer jacks being 22½° from the face of the girder and the inner jacks being 45° from each other and the outer jacks.
- The THJM2-5-SDS3 is designed for five jacks coming into the hanger at 30° from the girder and each other.
- Tabs on the seats of the THJM assist in the placement of the jacks and also include obround holes for optional slant nails (0.148" x 1½") when increased uplift is required.

Material: 12 gauge

Finish: Galvanized

Installation:

- Use all specified fasteners; see General Notes.
- Each carried jack truss requires one ¼" x 3" Strong-Drive SDS Heavy-Duty Connector screw installed into the bottom chord through the bottom of the hanger seat.
- For installation on girders with 2x6 or 2x8 bottom chords, install one additional ¼" x 3" Strong-Drive SDS Heavy-Duty Connector screw in the triangular hole on each vertical strap.
- Install two 0.148" x 1½" slant nails in the obround holes on each of the seat tabs to achieve the additional uplift load noted in the footnote.

Codes: See p. 11 for Code Reference Key Chart

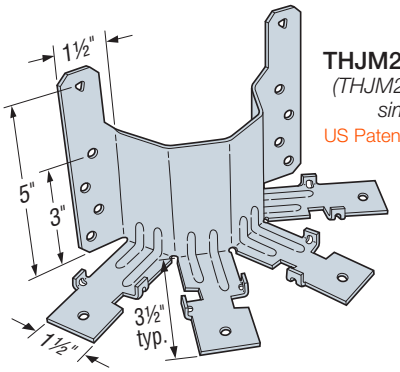

THJM2-4-SDS3
(THJM2-5-SDS3 similar)
US Patent 8,443,569

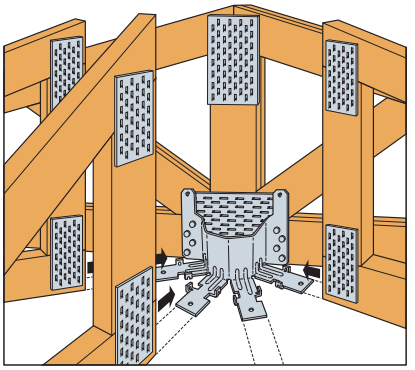

Typical THJM Installation

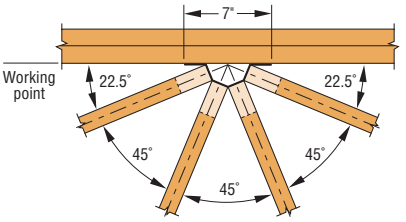

THJM2-4-SDS3
Top View Installation

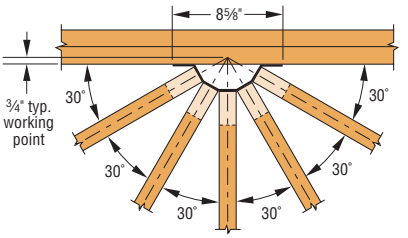

THJM2-5-SDS3
Top View Installation

Model No.	SDS Fasteners		DF/SP Allowable Loads					SPF/HF Allowable Loads					Code Ref.
	Carrying Member[3]	Carried Members (Total)	Total Uplift (160)[6]	Total Download				Total Uplift (160)[6]	Total Download				
				Floor (100)	Snow (115)	Roof (125)	Wind (160)		Floor (100)	Snow (115)	Roof (125)	Wind (160)	
THJM2-4-SDS3	(8) ¼" x 1½"	(4) ¼" x 3"	535	2,000	2,300	2,500	3,030	535	1,440	1,655	1,800	2,180	IBC, FL
	(8) ¼" x 3"	(4) ¼" x 3"	535	3,270	3,270	3,270	3,270	535	2,355	2,355	2,355	2,355	
THJM2-5-SDS3	(8) ¼" x 1½"	(5) ¼" x 3"	620	2,000	2,300	2,500	3,030	445	1,440	1,665	1,800	2,180	
	(8) ¼" x 3"	(5) ¼" x 3"	620	3,360	3,765	3,765	3,765	620	2,420	2,710	2,710	2,710	

1. Tabulated loads are the total allowable loads of all carried members combined; the load on any single carried member shall not exceed 25% of the total published load for the THJM2-4 or 20% of the total published load for the THJM2-5.
2. Uplift loads have been increased for earthquake or wind loading with no further increase allowed. Reduce where other loads govern.
3. A minimum two-ply carrying member is required for the ¼" x 3" Strong-Drive® SDS Heavy-Duty Connector screws (provided). For single 2x carrying members, use ¼" x 1½" SDS screws (not supplied) with corresponding loads.
4. A minimum two-ply carrying member is required for the tabulated loads.
5. Truss chord cross-grain tension may limit allowable loads per ANSI/TPI 1-2014. The optional triangle holes may be used for installation on 2x6 and larger carrying members, for a total of 10 fasteners into the carrying member, to resist cross-grain tension forces when no other mechanical reinforcement is available.
6. Tabs on the seats of the THJM hangers have obround holes for optional 0.148" x 1½" slant nails (two per carried member) when additional uplift load is required. Total allowable uplift with the optional 0.148" x 1½" slant nailing is 970 lb. (DF/SP/SPF/HF).
7. Strong-Drive® SDS Heavy-Duty Connector screws may be installed through metal truss plates as approved by the Truss Designer, provided the requirements of ANSI/TPI 1-2014, Sections 7.5.3.4 and 8.9.2 are met (predrilling required through the plate using a 5⁄32" bit maximum).

C-C-2021 ©2021 SIMPSON STRONG-TIE COMPANY INC.

THGQ/THGQH/HTHGQ

Girder Hangers for SCL or Truss Girders Attached to Truss

This product is preferable to similar connectors because of (a) easier installation, (b) higher loads, (c) lower installed cost, or a combination of these features.

A lower-cost alternative to bolted hangers, the THGQ and THGQH hangers for multi-ply girder trusses use Strong-Drive® SDS Heavy-Duty Connector screws to provide high load capacities and easier installation compared to bolts. The Strong-Drive SDS Heavy-Duty Connector screws help transfer the load between the plies of the supporting girder when they penetrate all plies.

THGQ and THGQH models offer minimum and optional maximum fastener quantities to accommodate varying design needs. Allowable loads for various girder web member sizes provide additional installation options.

The HTHGQ is a high-load version designed to carry multi-ply trusses or composite lumber up to 5-ply girder trusses. For high-load capacities and easier installation compared to bolts, the HTHGQ is designed for use with Strong-Drive SDS Heavy-Duty Connector screws.

Material: THGQ — 7 gauge; THGQH/HTHGQ — 3 gauge

Finish: THGQ — galvanized;
THGQH/HTHGQ — Simpson Strong-Tie gray paint

Installation:

- Use all specified fasteners. See General Notes.
- Can be installed filling round holes only, or filling round and triangle holes for maximum values.
- Strong-Drive SDS Heavy-Duty Connector screws supplied for all round and triangle holes. Installation may not require use of all Strong-Drive SDS Heavy-Duty Connector screws.
- All multiple members must be fastened together to act as a single unit.
- The thickness of the supporting girder must be equal to or greater than the screw length. For applications where the length of the supplied screws exceeds the thickness of the supporting girder, 3" or 4½" screws may be substituted for the longer length screws with no load reduction, or a shim block may be used as approved by the designer.
- Girders must be adequately laterally braced to prevent excessive displacement due to secondary torsional stresses (Ref ANSI/TPI 1-2014 Section 7.5.3.5).

Options:

- See Hanger Options information on pp. 97–99.
- THGQH may be skewed 45° for the models shown. See p. 217.
- For Hem-Fir or Spruce-Pine-Fir members, multiply tabulated allowable loads for the skewed THGQH by 0.86. Connector must be installed centered on girder vertical webs.

Codes: See p. 11 for Code Reference Key Chart

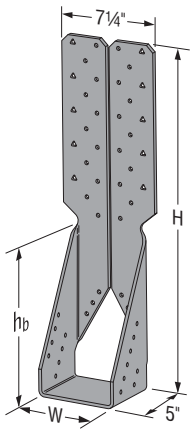

THGQH5.50-SDS
(others similar)

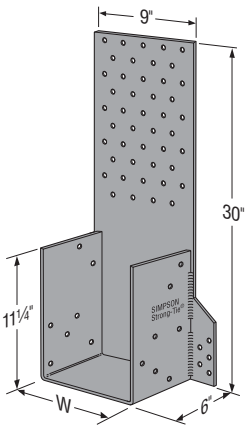

HTHGQ-SDS
(others similar)

US Patent 9,228,338

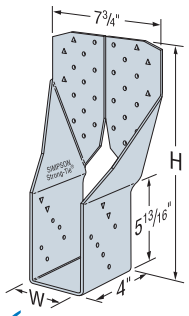

THGQ2-SDS3
(THGQ3-SDS4.5 similar)

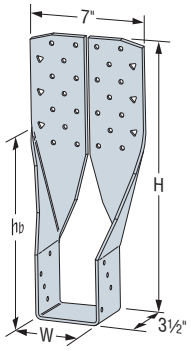

THGQ3.62-SDS
(others similar)

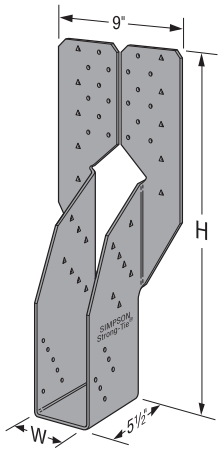

THGQH2-SDS3

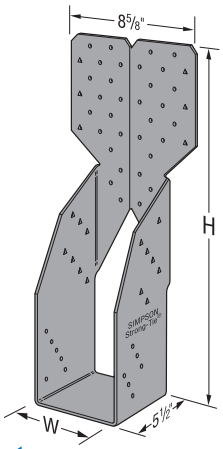

THGQH3-SDS4.5
(THGQH4-SDS6 similar)

C-C-2021 ©2021 SIMPSON STRONG-TIE COMPANY INC.

Girder Hangers for SCL or Truss Girders Attached to Truss (cont.)

Allowable Loads for Multi-Ply Truss Girder

Model No.	Dimensions (in.)		Support Member		SDS Fasteners		DF/SP Allowable Loads					SPF/HF Allowable Loads					Code Ref.
	W	H	Max. B.C. Depth	Min. Vert. Web Size	Face	Joist	Uplift (160)	Floor (100)	Snow (115)	Roof (125)	Wind (160)	Uplift (160)	Floor (100)	Snow (115)	Roof (125)	Wind (160)	
THGQ2-SDS3 (Min.)	3 5/16	16	2x12	2x6	(22) ¼" x 3"	(10) ¼" x 3"	3,600	7,920	7,920	7,920	7,920	3,095	6,600	6,810	6,810	6,810	FL
				2x8	(28) ¼" x 3"		3,600	10,080	10,080	10,080	10,080	3,095	8,400	8,670	8,670	8,670	
THGQ2-SDS3 (Max.)	3 5/16	16	2x12	2x6	(22) ¼" x 3"	(14) ¼" x 3"	4,535	9,240	9,770	9,770	9,770	3,900	6,600	7,590	8,250	8,400	
				2x8	(28) ¼" x 3"		4,535	11,760	12,435	12,435	12,435	3,900	8,400	9,660	10,500	10,695	
THGQH2-SDS3 (Min.)	3 5/16	25	2x12	2x6	(18) ¼" x 3"	(12) ¼" x 3"	3,875	7,560	7,685	7,685	7,685	3,335	5,400	6,210	6,610	6,610	
				2x8	(28) ¼" x 3"		3,875	11,760	11,950	11,950	11,950	3,335	8,400	9,660	10,275	10,275	
THGQH2-SDS3 (Max.)	3 5/16	25	2x12	2x6	(18) ¼" x 3"	(26) ¼" x 3"	7,635	7,560	7,940	7,940	7,940	6,565	5,400	6,210	6,750	6,830	
				2x8	(28) ¼" x 3"		9,900	11,760	12350	12,350	12,350	8,515	8,400	9,660	10,500	10,620	
THGQ3-SDS4.5 (Min.)	4 15/16	16	2x12	2x6	(22) ¼" x 4½"	(10) ¼" x 4½"	3,600	7,920	7,920	7,920	7,920	3,095	6,600	6,810	6,810	6,810	
				2x8	(28) ¼" x 4½"		3,600	10,080	10,080	10,080	10,080	3,095	8,400	8,670	8,670	8,670	
THGQ3-SDS4.5 (Max.)	4 15/16	16	2x12	2x6	(22) ¼" x 4½"	(14) ¼" x 4½"	4,535	9,240	9,770	9,770	9,770	3,900	6,600	7,590	8,250	8,400	
				2x8	(28) ¼" x 4½"		4,535	11,760	12,435	12,435	12,435	3,900	8,400	9,660	10,500	10,695	
THGQH3-SDS4.5 (Min.)	4 15/16	25	2x12	2x8	(32) ¼" x 4½"	(12) ¼" x 4½"	3,875	12,565	12,565	12,565	12,565	3,335	9,600	10,805	10,805	10,805	
				2x10	(38) ¼" x 4½"		3,875	14,920	14,920	14,920	14,920	3,335	11,400	12,830	12,830	12,830	
THGQH3-SDS4.5 (Max.)	4 15/16	25	2x12	2x8	(32) ¼" x 4½"	(26) ¼" x 4½"	9,900	12,980	12,980	12,980	12,980	8,515	9,600	11,040	11,165	11,165	
				2x10	(38) ¼" x 4½"		9,900	15,415	15,415	15,415	15,415	8,515	11,400	13,110	13,255	13,255	
THGQH4-SDS6 (Min.)	6 9/16	25	2x12	2x8	(34) ¼" x 6"	(12) ¼" x 6"	3,875	13,875	13,875	13,875	13,875	3,335	10,200	11,730	11,935	11,935	
				2x10	(40) ¼" x 6"		3,875	16,320	16,320	16,320	16,320	3,335	12,000	13,800	14,035	14,035	
THGQH4-SDS6 (Max.)	6 9/16	25	2x12	2x8	(34) ¼" x 6"	(26) ¼" x 6"	9,900	14,280	14,335	14,335	14,335	8,515	10,200	11,730	12,330	12,330	
				2x10	(40) ¼" x 6"		9,900	16,800	16,865	16,865	16,865	8,515	12,000	13,800	14,505	14,505	

1. Uplift loads have been increased for earthquake or wind loading with no further increase allowed. Reduce where other loads govern.
2. Connector must be installed centered on girder vertical webs.
3. Strong-Drive® SDS Heavy-Duty Connector screws may be installed through metal truss plates as approved by the Truss Designer, provided the requirements of ANSI/TPI 1-2014, Sections 7.5.3.4 and 8.9.2 are met (predrilling required through the plate using a 5/32" bit maximum).
4. Strong-Drive SDS Heavy-Duty Connector screws that penetrate all plies of the supporting girder (screws must penetrate a minimum of 1" into the last truss ply) may also be used to transfer the load through all the plies of the supporting girder. When SDS Heavy-Duty Connector screws do not penetrate all plies of the supporting girder truss, supplemental SDS screws at the hanger locations may be required to transfer the load to the truss plies not penetrated by the face fasteners, as determined by the designer.
5. The supporting girder truss must have adequate thickness to accommodate the screw length, so that the screw does not protrude out the back of the girder. 3"- or 4½"-long Strong-Drive SDS Heavy-Duty Connector screws may be substituted for longer SDS screws with no load reduction.
6. For installations to LSL, use ¼" x 3" Strong-Drive SDS Heavy-Duty Connector screws and use the DF/SP table loads.
7. Wind (160) is a download rating.

Allowable Loads for Heavy Multi-Ply Truss Girder

Model No.	Width (W) (in.)	SDS Fasteners		DF/SP Allowable Loads					SPF/HF Allowable Loads					Code Ref.
		Carrying Member	Carried Member	Uplift (160)	Floor (100)	Snow (115)	Roof (125)	Wind (160)	Uplift (160)	Floor (100)	Snow (115)	Roof (125)	Wind (160)	
HTHGQ2-SDS	3 5/16	(55) ¼"x 4½"	(14) ¼"x 3"	3,940	17,130	18,010	18,600	20,660	3,390	11,885	12,520	12,940	14,425	—
HTHGQ3-SDS	4 15/16			3,940	20,735	20,735	20,735	20,735	3,390	15,710	16,345	16,765	17,835	
HTHGQ4-SDS	6 9/16			3,940	20,735	20,735	20,735	20,735	3,390	16,630	17,835	17,835	17,835	
HTHGQ5-SDS	8⅛			3,940	20,735	20,735	20,735	20,735	3,390	16,630	17,835	17,835	17,835	

1. Tabulated allowable loads must be selected based on duration of load as permitted by the applicable building code.
2. Uplift loads have been increased for earthquake or wind loading with no further increase allowed. Reduce where other loads govern.
3. Wind (160) is a download rating.
4. Connector must be installed centered on a minimum 2x10 vertical web.
5. A minimum three-ply carrying member is required for the tabulated loads.
6. Carrying truss plies must be adequately fastened together as determined by the designer.
7. Truss chord cross-grain tension may limit allowable loads in accordance with ANSI/TPI 1-2014. Simpson Strong-Tie® Connector Selector™ software includes the evaluation of cross-grain tension in its hanger allowable loads. For additional information, contact Simpson Strong-Tie.
8. Strong-Drive SDS Heavy-Duty Connector screws may be installed through metal truss plates as approved by the Truss Designer, provided the requirements of ANSI/TPI 1-2014, Sections 7.5.3.4 and 8.9.2 are met (predrilling required through the plate using a 5/32" bit maximum).

C-C-2021 ©2021 SIMPSON STRONG-TIE COMPANY INC.

THGQ/THGQH/HTHGQ

Girder Hangers for SCL or Truss Girders Attached to Truss (cont.)

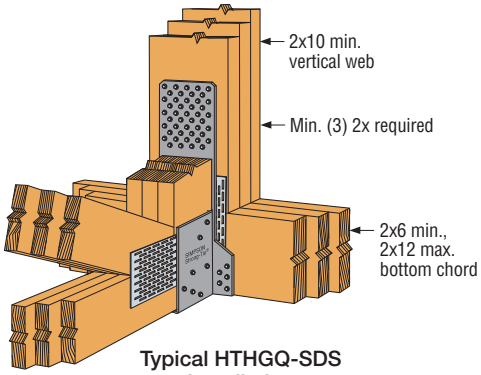

Typical HTHGQ-SDS Installation

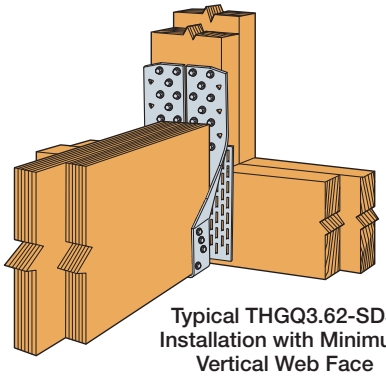

Typical THGQ3.62-SDS Installation with Minimum Vertical Web Face Fasteners

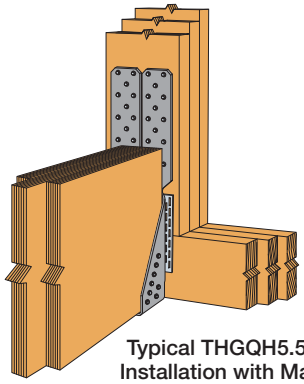

Typical THGQH5.50-SDS Installation with Maximum Vertical Web Face Fasteners

Allowable Loads for Structural Composite Lumber (SCL)

Model No.	Dimensions (in.)			Support Member		SDS Fasteners		DF/SP Allowable Loads					SPF/HF Allowable Loads					Code Ref.
	W	H	h_b	Max B.C Depth	Min. Vert. Web Size	Face	Joist	Uplift (160)	Floor (100)	Snow (115)	Roof (125)	Wind (160)	Uplift (160)	Floor (100)	Snow (115)	Roof (125)	Wind (160)	
THGQ3.62-SDS (Min.)	3⅝	16 1/16	10	2x12	2x6	(22) ¼" x 3"	(8) ¼" x 3"	2,620	6,310	6,310	6,310	6,310	2,250	5,425	5,425	5,425	5,425	—
THGQ3.62-SDS (Max.)					2x8	(28) ¼" x 3"	(8) ¼" x 3"	2,620	8,825	8,825	8,825	8,825	2,250	7,360	7,590	7,590	7,590	
THGQH3.62-SDS (Min.)	3⅝	24½	11	2x12	2x6	(26) ¼" x 3"	(18) ¼" x 3"	3,525	10,920	11,080	11,080	11,080	3,030	7,800	8,970	9,530	9,530	
THGQH3.62-SDS (Max.)					2x8	(36) ¼" x 3"	(18) ¼" x 3"	3,525	12,080	12,080	12,080	12,080	3,030	10,390	10,390	10,390	10,390	
THGQ5.50-SDS (Min.)	5½	17¼	8¼	2x12	2x6	(24) ¼" x 4½"	(8) ¼" x 4½"	2,620	7,315	7,315	7,315	7,315	2,250	6,295	6,295	6,295	6,295	
THGQ5.50-SDS (Max.)					2x8	(32) ¼" x 4½"	(8) ¼" x 4½"	2,620	8,655	8,655	8,655	8,655	2,250	7,445	7,445	7,445	7,445	
THGQH5.50-SDS (Min.)	5½	25	11¼	2x12	2x6	(28) ¼" x 4½"	(16) ¼" x 4½"	3,525	10,640	10,640	10,640	10,640	3,030	8,400	9,150	9,150	9,150	
THGQH5.50-SDS (Max.)					2x8	(38) ¼" x 4½"	(16) ¼" x 4½"	3,525	15,960	17,325	17,325	17,325	3,030	11,400	13,110	14,250	14,900	
THGQH7.25-SDS (Min.)	7¼	24½	11¼	2x12	2x6	(28) ¼" x 6"	(16) ¼" x 6"	3,525	11,760	12,070	12070	12,070	3,030	8,400	9,660	10,380	10,380	
THGQH7.25-SDS (Max.)					2x8	(38) ¼" x 6"	(16) ¼" x 6"	3,525	15,565	15,565	15,565	15,565	3,030	11,400	13,110	13,385	13,385	
					2x10	(46) ¼" x 6"	(16) ¼" x 6"	3,525	18,360	18,360	18,360	18,360	3,030	13,800	15,790	15,790	15,790	

See THGQ foonotes on p. 216.

Model No.	Max. B.C. Depth (in.)	Min. Vertical Web Size	SDS Fasteners		DF/SP Allowable Loads	
			Face	Joist	Uplift (160)	Down (100/115/125)
THGQH2 SK45	17	2x6	(18) ¼" x 3"	(18) ¼" x 3"	4,570	6,090
		2x8	(28) ¼"x 3"			9,470
THGQH3 SK45	14	2x8	(30) ¼" x 4½"	(18) ¼" x 4½"	3,875	10,270
		2x10	(36) ¼" x 4½"			12,480
THGQH4 SK45	13	2x8	(34) ¼" x 6"	(18) ¼" x 6"	3,180	11,890
		2x10	(40) ¼" x 6"			13,990

1. For Hem-Fir or Spruce-Pine-Fir members, multiply tabulated allowable loads for the skewed THGQH by 0.86. Connector must be installed centered on girder vertical webs

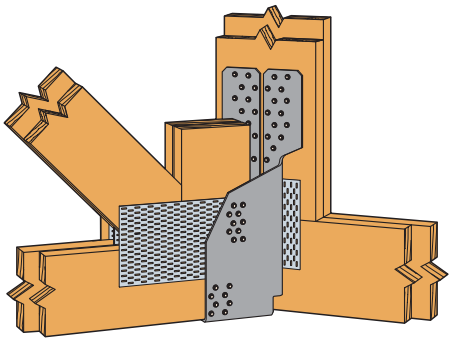

Typical THGQH2-SDS3 SK45 Installation Skewed Left

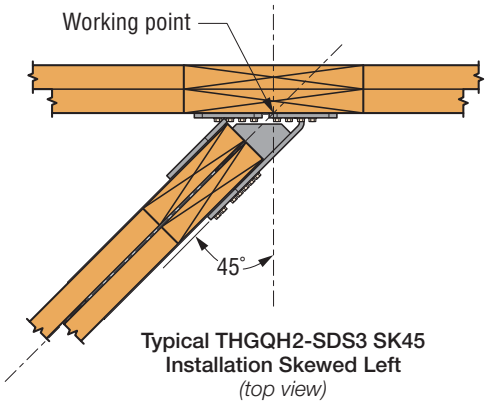

Typical THGQH2-SDS3 SK45 Installation Skewed Left
(top view)

C-C-2021 ©2021 SIMPSON STRONG-TIE COMPANY INC.

THGB/THGBH/THGW/THGBV/THGBHV/THGWV

Truss and SCL-to-Truss Girder Hangers

These high-capacity, welded hangers are designed for attaching two-ply, three-ply or four-ply-sized structural composite lumber (SCL) and multi-ply girder trusses to a girder truss.

The THGBV and THGB offer optional installation with Strong-Drive® SDS Heavy-Duty Connector screws, while the bolted THGBHV, THGWV, THGBH and THGW offer higher load capacities.

For the THGBV/THGBHV/THGWV series, two bucket heights are available for each width to accommodate a range of SCL sizes. Options for skewing or dropping the buckets for conditions where the SCL joist is lower than the girder bottom chord provide additional design flexibility for a variety of SCL-to-truss connections.

See the THGQ/THGQH series for a lower-cost alternative that uses Strong-Drive SDS Heavy-Duty Connector screws instead of bolts and offers high-load capacities.

Material: 3 gauge

Finish: Simpson Strong-Tie gray paint

Installation:

- Use all specified fasteners; see General Notes.
- All multiple members must be fastened together to act as a single unit.
- Maximum 11⅞" bottom chord in the carrying member to allow for the minimum bolt end distance.
- Bolts must be installed symmetrically when using fewer than eight bolts on the eight-bolt backplate.
- Girders must be adequately laterally braced to prevent excessive displacement due to secondary torsional stresses (Ref. ANSI/TPI 1-2014 Section 7.5.3.5).
- Shall be attached to a two-ply girder truss to allow for required minimum screw penetration. See footnote 4.

Options:

Skewed Seat

- THGB/THGBH/THGBV/THGBHV hangers can be skewed to a maximum of 45°. The maximum allowable down load and uplift load for skew is 0.87 of the table load.

Dropped Bucket

- THGB/THGBH/THGW/THGBV/THGBHV backplates can be extended to allow for up to a 6" dropped bucket.
- Allowable loads are 100% of the table loads.
- Order as "X" version, specify the total backplate height, BK_PLT, equal to the hanger height (H) plus the dropped bucket amount (d_b). Ex: a THGBV3.62/9 with a 4" dropped bucket would have a total backplate height of 27¼".

Codes: See p. 11 for Code Reference Key Chart

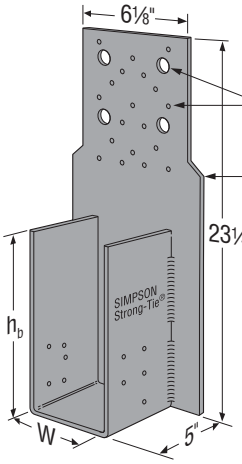

THGBV
(THGB similar)

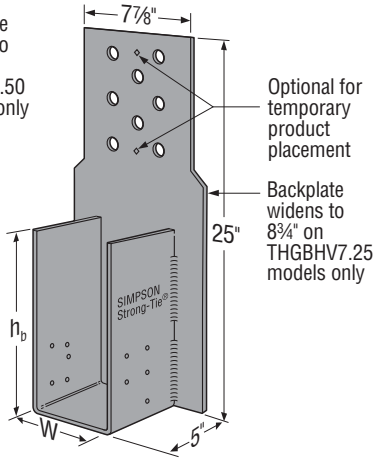

THGBHV
(THGBH similar)

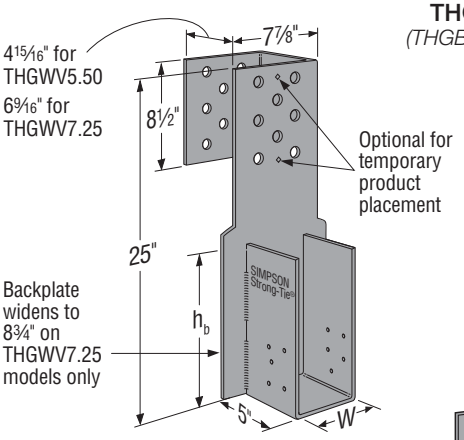

THGWV
(THGW similar)

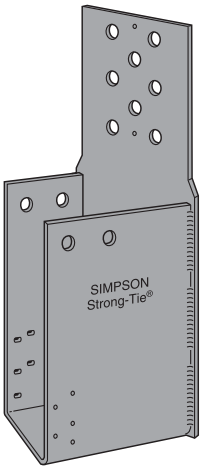

THGBH3
(skewed left)

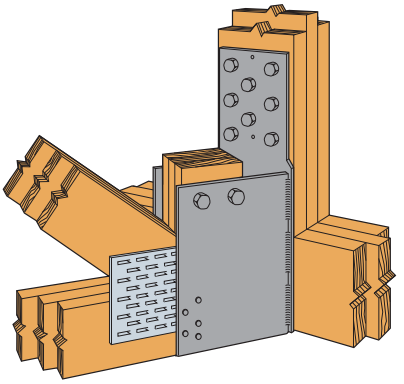

Typical THGBH Installation Skewed Left

C-C-2021 ©2021 SIMPSON STRONG-TIE COMPANY INC.

THGB/THGBH/THGW/THGBV/THGBHV/THGWV

Truss and SCL-to-Truss Girder Hangers (cont.)

Joist Dimensions (in.)		Model No.	Hanger Dimensions (in.)	
Width	Depth		W	h_b
3½	9¼ – 14	THGBV3.62/9	3⅝	9
		THGBHV3.62/9		
	11¼ – 20	THGBV3.62/11		11
		THGBHV3.62/11		
5¼	9¼ – 14	THGBV5.50/9	5½	9
		THGBHV5.50/9		
		THGWV5.50/9		
	11¼ – 20	THGBV5.50/11		11
		THGBHV5.50/11		
		THGWV5.50/11		
7	9¼ – 14	THGBHV7.25/9	7¼	9
		THGWV7.25/9		
	11¼ – 20	THGBHV7.25/11		11
		THGWV7.25/11		

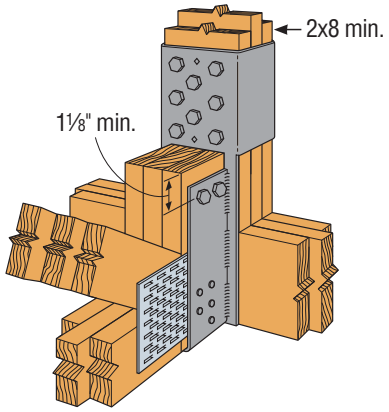

Typical THGW3 Installation

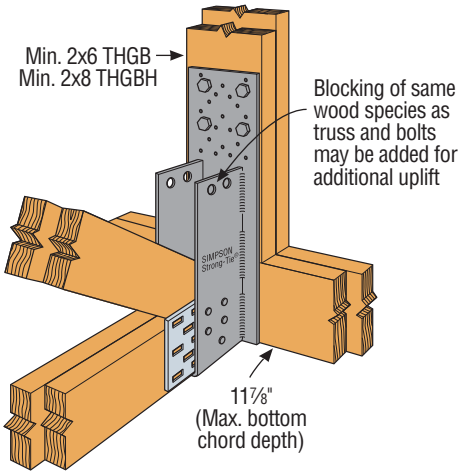

Typical THGB2 Installation

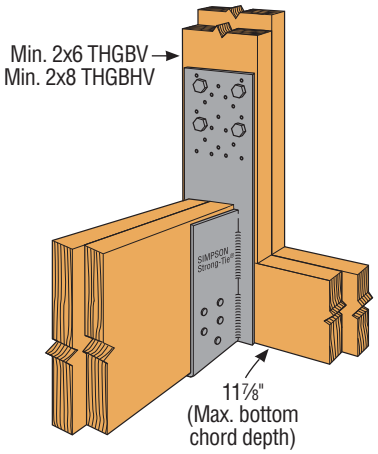

Typical THGBV3.62/9 Installation

C-C-2021 ©2021 SIMPSON STRONG-TIE COMPANY INC.

THGB/THGBH/THGW/THGBV/THGBHV/THGWV

Truss and SCL-to-Truss Girder Hangers (cont.)

Model No.	Beam Width (in.)	Fasteners (in.)		Length of Bolt in Carrying Member	DF/SP Allowable Loads					SPF/HF Allowable Loads					Code Ref.
		Carried Member	Carrying Member		Uplift (160)	Floor (100)	Snow (115)	Roof (125)	Wind (160)	Uplift (160)	Floor (100)	Snow (115)	Roof (125)	Wind (160)	
THGBV3.62/9 THGBV3.62/11	3½	(10) 0.148 x 3	(4) ¾ MB	3	2,570	6,030	6,835	7,375	8,715	2,570	5,160	5,840	6,290	7,320	—
				4½		6,910	7,780	8,350	8,715		6,385	7,185	7,320	7,320	
				6		6,910	7,780	8,350	8,715		6,400	7,200	7,320	7,320	
			(19) ¼ x 3 SDS	—		7,980	8,675	8,675	8,675		5,700	6,245	6,245	6,245	
THGBHV3.62/9 THGBHV3.62/11	3½	(10) 0.148 x 3	(8) ¾ MB	3	2,570	10,105	10,345	10,505	10,915	2,570	7,465	7,675	7,815	8,285	
				4½		10,915	10,915	10,915	10,915		9,165	9,165	9,165	9,165	
				6		10,915	10,915	10,915	10,915		9,165	9,165	9,165	9,165	
THGBV5.50/9 THGBV5.50/11	5¼	(10) 0.148 x 3	(4) ¾ MB	3	2,570	6,030	6,835	7,375	8,715	2,570	5,160	5,840	6,290	7,320	
				4½		6,910	7,780	8,350	8,715		6,385	7,185	7,320	7,320	
				6		6,910	7,780	8,350	8,715		6,400	7,200	7,320	7,320	
			(19) ¼ x 3 SDS	—		7,980	8,675	8,675	8,675		5,700	6,245	6,245	6,245	
THGBHV5.50/9 THGBHV5.50/11	5¼	(10) 0.148 x 3	(8) ¾ MB	3	2,570	10,915	10,915	10,915	10,915	2,570	9,165	9,165	9,165	9,165	
				4½		12,665	12,665	12,665	12,665		10,500	10,640	10,640	10,640	
				6		12,815	12,815	12,815	12,815		10,500	10,710	10,765	10,765	
THGBHV7.25/9 THGBHV7.25/11	7	(10) 0.148 x 3	(4) ¾ MB	3	2,570	6,040	6,850	7,390	8,715	2,570	5,165	5,845	6,295	7,320	
				4½		6,910	7,780	8,350	8,715		6,385	7,185	7,320	7,320	
				6		6,910	7,780	8,350	8,715		6,400	7,200	7,320	7,320	
THGBHV7.25/9 THGBHV7.25/11	7	(10) 0.148 x 3	(6) ¾ MB	3	2,570	9,065	10,010	10,010	10,010	2,570	7,750	8,410	8,410	8,410	
				4½		10,010	10,010	10,010	10,010		8,410	8,410	8,410	8,410	
				6		10,010	10,010	10,010	10,010		8,410	8,410	8,410	8,410	
THGBHV7.25/9 THGBHV7.25/11	7	(10) 0.148 x 3	(8) ¾ MB	3	2,570	10,915	10,915	10,915	10,915	2,570	9,165	9,165	9,165	9,165	
				4½		13,830	15,060	15,060	15,060		12,650	12,650	12,650	12,650	
				6		13,830	15,060	15,060	15,060		12,650	12,650	12,650	12,650	
THGWV5.50/9 THGWV5.50/11	5¼	(10) 0.148 x 3	(8) ¾ MB	4½	2,570	21,320	21,835	21,835	21,835	2,570	18,340	18,340	18,340	18,340	
THGWV7.25/9 THGWV7.25/11	7	(10) 0.148 x 3	(8) ¾ MB	6	2,570	24,165	24,165	24,165	24,165	2,570	20,300	20,300	20,300	20,300	

1. Allowable loads are based on a SCL (LVL, PSL, or LSL) carried member with an allowable $F'_{c\perp}$ of 750 psi and equivalent Specific Gravity of 0.50 or higher.
2. Uplift loads have been increased for earthquake or wind loading with no further increase allowed. Reduce where other loads govern.
3. A three-ply carrying member is required for the THGWV5.50/9 and THGWV5.50/11; a four-ply carrying member is required for the THGWV7.25/9 and THGWV7.25/11.
4. Strong-Drive® SDS Heavy-Duty Connector screws require a minimum two-ply (3") carrying member.
5. Bolts and Strong-Drive SDS Heavy-Duty Connector screws (not included) may be installed through metal truss connector plates as approved by the Truss Designer, provided the requirements of ANSI/TPI 1-2014, Sections 7.5.3.4 and 8.9.2 are met.
6. Wind (160) is a download rating.
7. To achieve published loads, install bolts into the girder truss with the nut on the opposite side of the hanger with a standard-cut washer (except THGWVs). Standard-cut washers are required for THGBV and THGBHV.
8. **Fasteners:** Nail dimensions are listed diameter by length. SDS screws are Simpson Strong-Tie® Strong-Drive SDS Heavy-Duty Connector screws. See pp. 21–22 for fastener information.

C-C-2021 ©2021 SIMPSON STRONG-TIE COMPANY INC.

THGB/THGBH/THGW/THGBV/THGBHV/THGWV

Truss and SCL-to-Truss Girder Hangers (cont.)

Model No.	Width (W) (in.)	Fasteners (in.)		Length of Bolt in Carrying Member	DF/SP Allowable Loads					SPF/HF Allowable Loads					Code Ref.
		Carried Member	Carrying Member		Uplift (160)	Floor (100)	Snow (115)	Roof (125)	Wind (160)	Uplift (160)	Floor (100)	Snow (115)	Roof (125)	Wind (160)	
THGB2	3 5/16	(10) 0.148 x 3 and (2) ¾ MB	(4) ¾ MB	3	9,250	6,030	6,840	7,375	9,250	7,765	5,160	5,845	6,290	7,770	FL
				4½	9,700	6,915	7,780	8,350	9,350	8,145	6,390	7,185	7,320	7,855	
				6	9,700	6,915	7,780	8,350	9,350	8,145	6,405	7,200	7,320	7,855	
THGB2	3 5/16	(10) 0.148 x 3 and (2) ¾ MB	(19) ¼ x 3 SDS	—	9,510	7,980	9,175	9,510	9,510	6,845	5,700	6,605	6,845	6,845	
THGBH2	3 5/16	(10) 0.148 x 3 and (2) ¾ MB	(8) ¾ MB	3	9,700	10,105	10,345	10,505	10,915	8,145	7,465	7,675	7,815	8,285	
				4½	9,700	10,105	10,345	10,505	10,915	8,145	8,490	8,690	8,825	9,165	
				6	9,700	10,105	10,345	10,505	10,915	8,145	8,490	8,690	8,825	9,165	
THGB3	4 15/16	(10) 0.148 x 3 and (2) ¾ MB	(4) ¾ MB	3	9,250	6,030	6,840	7,375	9,250	7,765	5,160	5,845	6,290	7,770	
				4½	9,700	6,915	7,780	8,350	9,350	8,145	6,390	7,185	7,320	7,855	
				6	9,700	6,915	7,780	8,350	9,350	8,145	6,405	7,200	7,320	7,855	
THGB3	4 15/16	(10) 0.148 x 3 and (2) ¾ MB	(19) ¼ x 3 SDS	—	9,510	7,980	9,175	9,510	9,510	6,845	5,700	6,605	6,845	6,845	
THGBH3	4 15/16	(10) 0.148 x 3 and (2) ¾ MB	(8) ¾ MB	3	9,700	10,915	10,915	10,915	10,915	8,145	9,165	9,165	9,165	9,165	
				4½	9,700	12,665	12,665	12,665	12,665	8,145	10,500	10,640	10,640	10,640	
				6	9,700	12,815	12,815	12,815	12,815	8,145	10,500	10,710	10,765	10,765	
THGBH4	6 9/16	(10) 0.148 x 3 and (2) ¾ MB	(4) ¾ MB	3	9,270	6,040	6,850	7,390	9,270	7,785	5,165	5,845	6,295	7,785	
				4½	9,700	6,915	7,780	8,350	9,350	8,145	5,810	7,185	7,320	7,855	
				6	9,700	6,915	7,780	8,350	9,350	8,145	5,810	7,200	7,320	7,855	
THGBH4	6 9/16	(10) 0.148 x 3 and (2) ¾ MB	(6) ¾ MB	3	9,700	9,065	10,010	10,010	10,010	8,145	7,750	8,410	8,410	8,410	
				4½	9,700	10,010	10,010	10,010	10,010	8,145	8,410	8,410	8,410	8,410	
				6	9,700	10,010	10,010	10,010	10,010	8,145	8,410	8,410	8,410	8,410	
THGBH4	6 9/16	(10) 0.148 x 3 and (2) ¾ MB	(8) ¾ MB	3	9,700	10,915	10,915	10,915	10,915	8,145	9,165	9,165	9,165	9,165	
				4½	9,700	13,830	15,060	15,060	15,060	8,145	12,650	12,650	12,650	12,650	
				6	9,700	13,830	15,060	15,060	15,060	8,145	12,650	12,650	12,650	12,650	
THGW3-3[6]	4 15/16	(10) 0.148 x 3 and (2) ¾ MB	(8) ¾ MB	4½	9,700	20,630	20,630	20,630	20,630	8,145	17,330	17,330	17,330	17,330	
THGW3-4[6]				6	9,700	20,630	20,630	20,630	20,630	8,145	17,330	17,330	17,330	17,330	
THGW4-3[6]	6 9/16	(10) 0.148 x 3 and (2) ¾ MB	(8) ¾ MB	4½	9,700	22,840	22,840	22,840	22,840	8,145	19,185	19,185	19,185	19,185	
THGW4-4[6]				6	9,700	22,840	22,840	22,840	22,840	8,145	19,185	19,185	19,185	19,185	

1. Uplift loads have been increased for earthquake or wind loading with no further increase allowed. Reduce where other loads govern.
2. A three-ply carrying member is required for the THGW3-3 and THGW4-3; a four-ply carrying member is required for the THGW3-4 and THGW4-4. For all other models, a minimum two-ply carrying member is required.
3. Strong Drive® SDS Heavy-Duty Connector screws require a minimum two-ply (3") carrying member.
4. Bolts and Strong Drive SDS Heavy-Duty Connector screws (not included) may be installed through metal truss connector plates as approved by the Truss Designer, provided the requirements of ANSI/TPI 1-2014, Sections 7.5.3.4 and 8.9.2 are met.
5. (10) 0.148" x 3" nails for the carried member will achieve the maximum downloads. Uplift loads are 2,570 lb. for DF/SP and 2,210 lb. for SPF/HF. To achieve maximum uplift, install nails and bolts listed in the table.
6. Loads for THGW models require that the supported member have minimum 2x6 end verticals to ensure end-grain bearing. Contact Simpson Strong-Tie for loads when horizontal members are bearing in the hanger seat.
7. Wind (160) is a download rating.
8. To achieve published loads, install bolts into the girder truss with the nut on the opposite side of the hanger with a standard-cut washer (except THGWs). Standard-cut washers are required for THGB and THGBH.
9. **Fasteners:** Nail dimensions are listed diameter by length. SDS screws are Simpson Strong-Tie® Strong-Drive SDS Heavy-Duty Connector screws. See pp. 21–22 for fastener information.

C-C-2021 ©2021 SIMPSON STRONG-TIE COMPANY INC.

HTHMQ

Heavy Multiple-Truss Hanger

The HTHMQ is a versatile, high-capacity truss hanger designed for various lumber types and multiple-ply trusses. The truss hanger accommodates a greater range of structural designs while accommodating right- or left-hand hips (at 30°–60° skews), which can be used for terminal hips with or without the center common jack. The HTHMQ can accommodate various widths of lumber.

Features:

- Available in various stirrup widths to accommodate various lumber types and multiple-ply trusses
- Installed with Strong-Drive® SDS Heavy-Duty Connector screws that eliminate the inconvenience of bolted installation
- Enables 2-3 member connection for a broader range of structural designs

Material: Back plate — 3 gauge; stirrup — 7 gauge

Finish: Simpson Strong-Tie gray paint

Installation:

- Use all specified fasteners; see General Notes.
- Strong-Drive SDS Heavy-Duty Connector screws supplied with connector.
- All multiple members must be fastened together to act as a single unit.
- Shall be attached to a minimum double girder truss to allow for required minimum screw penetration. See footnote 5.
- Girders must be adequately laterally braced to prevent excessive displacement due to secondary torsional stresses (Ref ANSI/TPI 1-2014 Section 7.5.3.5).
- See below for different installation options.

Codes: See p. 11 for Code Reference Key Chart

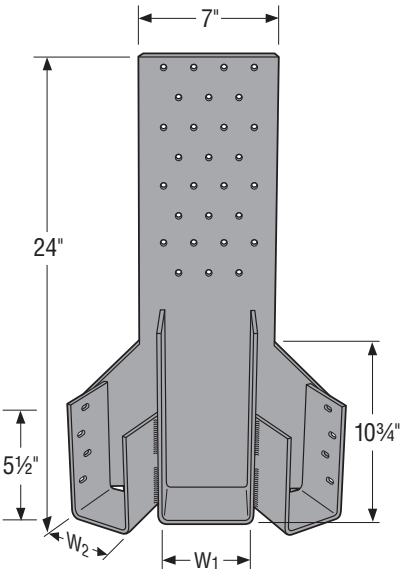

HTHMQ

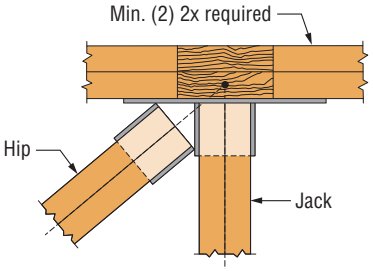

HTHMQL Top View
Left-Hand Hip Installation

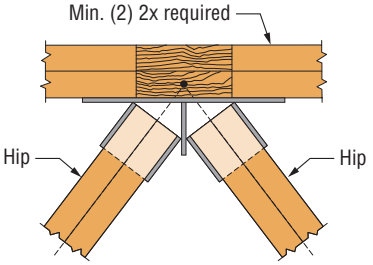

HTHMQN Top View
Terminal Hip Installation
without Common Center Jack

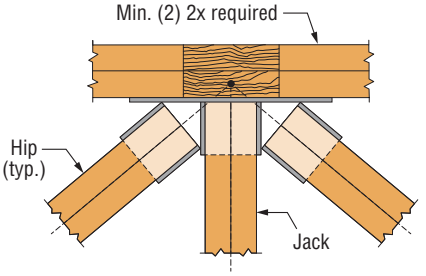

HTHMQ Top View
Terminal Installation
with Center Common Jack

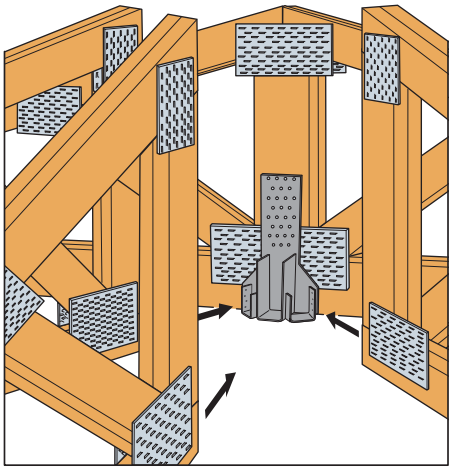

Typical HTHMQ Installation

C-C-2021 ©2021 SIMPSON STRONG-TIE COMPANY INC.

HTHMQ

Heavy Multiple-Truss Hanger (cont.)

Model No.	Dimensions (in.)			SDS Fasteners			DF/SP Allowable Loads						SPF/HF Allowable Loads						Code Ref.
							Uplift (160)			Down (100/115/125/160)			Uplift (160)			Down (100/115/125/160)			
	W_1	W_2	Hip Skew Angle	Carrying Member	Hips (Total)	Jack	Hip (ea)	Jack	Total	Hip (ea)	Jack	Total	Hip (ea)	Jack	Total	Hip (ea)	Jack	Total	
HTHMQ-SDS	1⅝ – 4 15/16	1⅝	30°–60°	(34) ¼" x 3"	(8) ¼" x 1½"	(4) ¼" x 1½"	1,085	545	2,715	4,045	2,020	10,110	935	470	2,340	2,790	1,395	6,975	
HTHMQ-2-SDS	1⅝ – 4 15/16	3 5/16	30°–60°	(34) ¼" x 3"	(8) ¼" x 2½"	(4) ¼" x 1½"	1,085	545	2,715	4,585	2,290	11,460	935	470	2,340	3,945	1,970	9,860	
HTHMQN-SDS	—	1⅝	30°–60°	(34) ¼" x 3"	(8) ¼" x 1½"	—	920	—	1,840	4,045	—	8,090	790	—	1,580	2,790	—	5,580	—
HTHMQN-2-SDS	—	3 5/16	30°–60°	(34) ¼" x 3"	(8) ¼" x 2½"	—	920	—	1,840	4,695	—	9,390	790	—	1,580	4,040	—	8,080	
HTHMQR/L-SDS	1⅝ – 4 15/16	1⅝	30°–60°	(34) ¼" x 3"	(4) ¼" x 1½"	(4) ¼" x 1½"	1,470	490	1,960	4,045	1,350	5,395	1,265	420	1,685	2,790	930	3,720	
HTHMQR/L-2-SDS	1⅝ – 4 15/16	3 5/16	30°–60°	(34) ¼" x 3"	(4) ¼" x 2½"	(4) ¼" x 1½"	1,470	490	1,960	6,190	2,065	8,255	1,265	420	1,685	4,865	1,620	6,485	

1. Tabulated allowable loads must be selected based on duration of load as permitted by the applicable building code.
2. Uplift loads have been increased for earthquake or wind loading with no further increase allowed. Reduce where other loads govern.
3. Specify W_1 where applicable and Hip Skew Angle.
4. Connector must be installed centered on minimum 2x8 vertical web.
5. A minimum two-ply carrying member is required for the tabulated loads.
6. Carrying truss plies must be adequately fastened together as determined by the designer.
7. Truss chord cross-grain tension may limit allowable loads in accordance with ANSI/TPI 1-2014. Simpson Strong-Tie® Connector Selector™ software includes the evaluation of cross-grain tension in its hanger allowable loads. For additional information, contact Simpson Strong-Tie.
8. Tabulated allowable loads for three-member configurations assume that each hip carries 40% of the total load and the jack carries 20% of the total load. Tabulated allowable loads for single hip-jack configurations assume that 75% of the total load is distributed to the hip and 25% to the jack.
9. Strong-Drive® SDS Heavy-Duty Connector screws may be installed through metal truss plates as approved by the Truss Designer, provided the requirements of ANSI/TPI 1-2014, Sections 7.5.3.4 and 8.9.2 are met (predrilling required through the plate using a 5/32" bit maximum).
10. ¼" x 2½" Strong-Drive® SDS Heavy-Duty Connector screw may be substituted for the ¼" x 3" SDS screw provided with the HTHMQ with no load reduction. Back-to-back installations require a three-ply minimum girder.

Alternative Installations

- Block(s) should be of similar size/grade as the truss member to which it is attached. Blocking should be designed to act as one unit with the truss members.
- Block(s) should be of sufficient size to accept all carried/carrying member nails, and develop full seat bearing as specified in Simpson Strong-Tie publications.
- Truss Designer is to confirm blocking size/grade, fasteners required and application.
- Fasteners used to attach the additional blocking should be independent of the truss hanger fasteners.

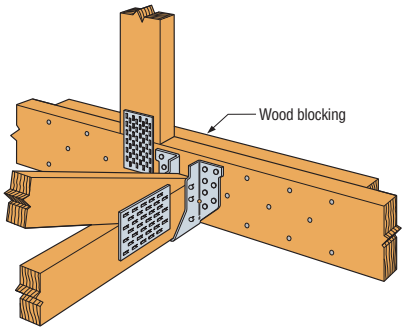

1 Use of wood blocking to achieve the full design load value of a face-mount hanger attached to a single-ply carrying (girder) member. (Block designed by Engineer of Record or Truss Designer.)

Example shown: HGUS28-2 installed on a 2x6 bottom chord *(other applications similar)*

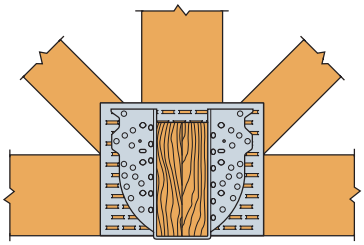

2 Connection design to achieve specified nailing of a face-mount hanger at a panel point. Nails located in joints formed by the intersection of wood members or with edge or end distances less than suggested by NDS have no load resistance. The hanger allowable load value shall be reduced by the nail shear value for each header nail less than the specified quantity. Connection shall be approved by the Truss Designer.

Example shown: THGBH4 installed

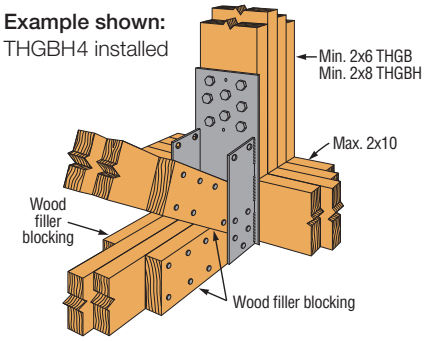

3 Use of wood filler blocking for carried member width less than hanger width. (Block designed by designer or Truss Designer.)

C-C-2021 ©2021 SIMPSON STRONG-TIE COMPANY INC.

DSC

Drag Strut Connector

The DSC drag-strut connector transfers diaphragm shear forces from a girder truss or beam to shearwalls. The DSC5 has been designed to optimize fastener location. The DSC2 is a smaller, lighter version that installs with fewer fasteners.

Features:

- Left hand and right hand versions available
- DSC connectors install with the ¼" x 3" Strong-Drive® SDS Heavy-Duty Connector screws (provided)

Material: DSC2 — 8 gauge; DSC5 — 3 gauge

Finish: DSC2 — galvanized;
DSC5 — Simpson Strong-Tie gray paint

Installation:

- Use all specified fasteners; see General Notes
- Strong-Drive SDS Heavy-Duty Connector screws are provided

Codes: See p. 11 for Code Reference Key Chart

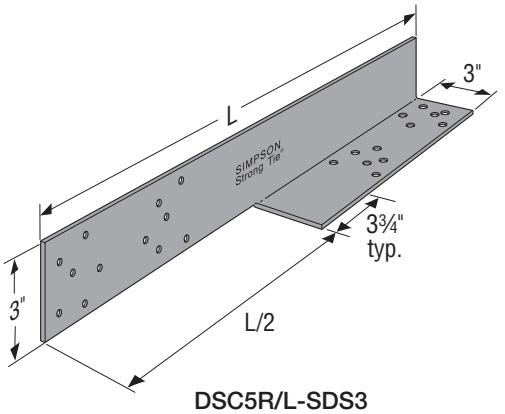

DSC5R/L-SDS3
(DSC2 similar)
(right hand DSC shown; specify right or left hand when ordering)

Model No.	L	SDS Fasteners	DF/SP Allowable Loads		SPF/HF Allowable Loads		Code Ref.
			Compression (160)	Tension (160)	Compression (160)	Tension (160)	
DSC2R/L-SDS3	16	(20) ¼" x 3"	2,590	3,475	2,225	2,990	IBC, FL
DSC5R/L-SDS3	21	(24) ¼" x 3"	4,340	4,195	3,730	3,610	

1. Allowable loads have been increased for wind or earthquake loading with no further increase allowed. Reduce where other loads govern.
2. Strong-Drive® SDS Heavy-Duty Connector screw minimum penetration is 2¾", minimum end distance is 2½" for DSC2 and 3¾" for DSC5, and minimum edge distance is ⅝" for full load values.
3. Strong-Drive SDS Heavy-Duty Connector screws may be installed through metal truss plates as approved by the Truss Designer, provided the requirements of ANSI/TPI 1-2014, Sections 7.5.3.4 and 8.9.2 are met (predrilling required through the plate using a 5/32" bit maximum).
4. **Fasteners:** SDS screws are Simpson Strong-Tie® Strong-Drive SDS Heavy-Duty Connector screws. See pp. 21–22 for fastener information.

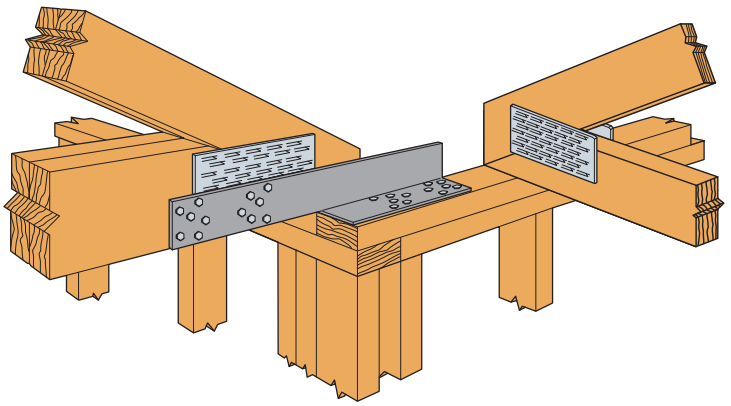

Typical DSC5R-SDS3 Installation
(DSC2 similar)

C-C-2021 ©2021 SIMPSON STRONG-TIE COMPANY INC.

AHEP

Adjustable Hip-End Purlin

The AHEP is a structural purlin that also serves as an installation lateral restraint and spacer during the truss erection process. The AHEP attaches to the leading edge of step-down hip trusses, eliminating the need for drop-top chords, 2x lumber or gable end fillers. The interlocking design of the AHEP allows them to install linearly, aligned with the end jacks, to maintain framing spacing from eave to hip or peak. Roof sheathing/decking attaches directly to the purlin with knurled pneumatic fasteners or low-profile head, self-drilling screws. Adjustable in length, the AHEP is designed to accommodate a pitch range of 3/12 to 9/12 as a structural purlin and up to 12/12 as an installation lateral restraint and spacer.

Features:

- A structural purlin to which sheathing can be directly attached — no need to remove temporary bracing
- Accurately spaces the installed trusses and helps meet the temporary top-chord lateral restraint recommendations of WTCA/TPI BCSI on step-down hip ends
- Adjustable in length to accommodate a wide pitch range

Material: 20 gauge (33 mil)

Finish: Galvanized

Installation:

- Use all specified fasteners; see General Notes.
- Prior to installation, the AHEP must be set to the proper length and the two tubes fastened together with four #10 x ¾" self-drilling screws through the round holes in the side flanges for pitches between 3/12 and 9/12; and in the triangular and upper round hole when the AHEP will be used as an installation restraint and spacer at pitches 9/12 up to 12/12.
- For trusses spaced 24" o.c., the pitch markings on the inner tube may be used to line up the tubes to the correct length for a given pitch. For other spacings, the length of the AHEP must be set to the calculated sloping length (from leading edge to leading edge of the framing members).
- To install the AHEPs on wood trusses, use four 0.148" x 3" nails. The two nails at the bottom of the part (the yoke end) must be clinched.
- Sheathing is attached to the AHEP with knurled pneumatic fasteners or low-profile-head, self-drilling screws.
- For efficiency, the AHEPs should be installed in line with the end jacks so that framing alignment can be maintained from eave to hip/ridge.

Codes: See p. 11 for Code Reference Key Chart

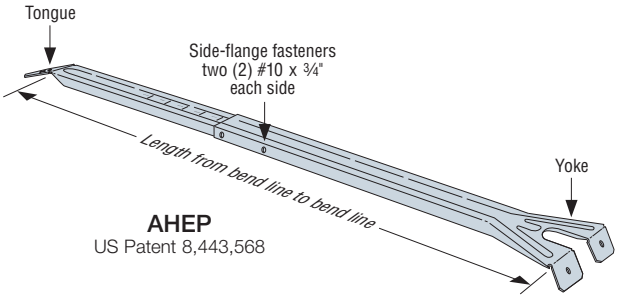

AHEP
US Patent 8,443,568

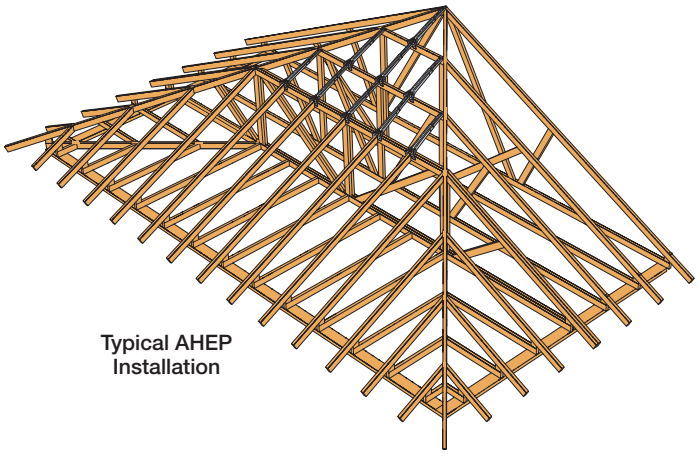

Typical AHEP Installation

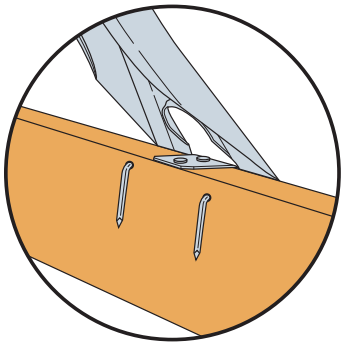

The two nails at the bottom of the part (the yoke end) must be clinched.

Model No.	Fasteners (in.)		Sheathing Option	Allowable Down Loads						Code Ref.
	AHEP Side Flanges	To Hip Trusses		3/12 Pitch		3.1/12 Pitch		9/12 Pitch		
				L/180	3/16"	L/180	3/16"	L/180	3/16"	
AHEP	(4) #10 x ¾	(4) 0.148 x 3	None	180	240	180	240	135	150	IBC, FL
			15/32" (min.) wood sheathing	250	345	210	275	160	175	

1. Loads may not be increased for duration of load.
2. Allowable loads apply to wood with a specific gravity of 0.42 or greater.
3. Designer shall ensure that attached members are adequately designed to resist applied loads.
4. Straight-line interpolation can be used to determine allowable loads for pitches between 3.1:12 and 9:12.
5. **Fasteners:** Nail dimensions are listed diameter by length. See pp. 21–22 for fastener information.

C-C-2021 ©2021 SIMPSON STRONG-TIE COMPANY INC.

TSF

Truss Spacer

The TSF is a fast and accurate method for spacing trusses that eliminates layout marking of top plates and can be left in place under the sheathing. Accuracy is improved, spacing errors are minimized, and it is easy to use.

Material: 22 gauge

Finish: Galvanized

Installation:

- See installation sequence below.
- TSF truss tpacers do not provide bracing of any kind and are not structural members. The TSF is for spacing only. Refer to instructions from architect, engineer, truss manufacturer or other for bracing and installation information.

Codes: See p. 11 for Code Reference Key Chart

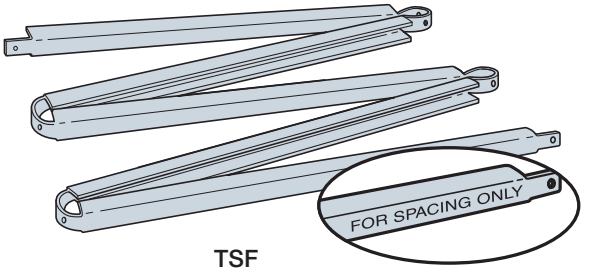

TSF

Model No.	Dimensions			Code Ref.
	W	O.C. Spacing	Total Length	
TSF2-16	1½"	16"	8'	—
TSF2-24	1½"	24"	10'	

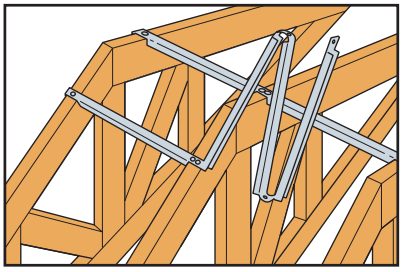

Step 1
Nail starting notch to first member.

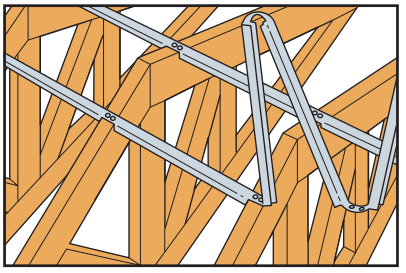

Step 2
As each successive member is positioned, unfold TSF to next notch. The notch teeth grip member and align it for nailing.

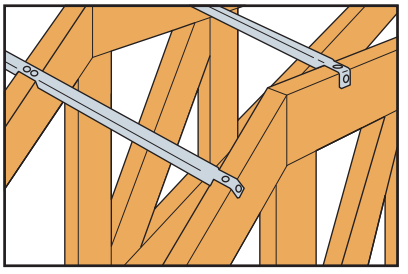

Step 3
If spacer does not align with end truss, break spacer off at notch. Then, hammer spacer flat, fold it under and nail.

C-C-2021 ©2021 SIMPSON STRONG-TIE COMPANY INC.

TSBR

Truss Spacer-Restraint

The Simpson Strong-Tie TSBR truss spacer-restraint is a time-saving lateral-restraint product that improves quality and safety while helping to meet the prescriptive recommendations of the WTCA/TPI. Easier to install than wood bracing, the TSBR firmly grips the trusses, capturing on-center spacing and keeping them vertical and plumb after placement, resulting in a better truss installation. The unique design eliminates additional time spent measuring truss spacing and laying out temporary lateral bracing. And once installed, the TSBR can remain in place to be sheathed over, thereby eliminating the need to remove temporary bracing and creating a safer, more stable work platform.

Features:

- Enables the quick and accurate spacing of trusses without measuring or adjusting
- Helps meet prescriptive temporary bracing recommendations of the BCSI
- Easily "grabs" onto the truss — may be put in place with one hand
- Stays in place during sheathing, saving time and making the roof more stable for workers
- Installs in less time and requires less total bracing material than prescriptive wood bracing methods — reducing labor costs
- The TSBR is a direct replacement for the TSB truss spacer bracer

Material: 22 gauge

Finish: Galvanized

Installation:

- Use all specified fasteners; see General Notes.
- TSBR lateral restraint locations are as recommended in Table B2-1 of SBCA/TPI BCSI or the BCSI B2 Summary Sheet. For more information, see **strongtie.com**.

Codes: See p. 11 for Code Reference Key Chart

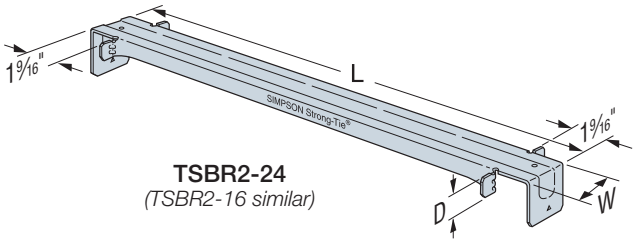

TSBR2-24
(TSBR2-16 similar)

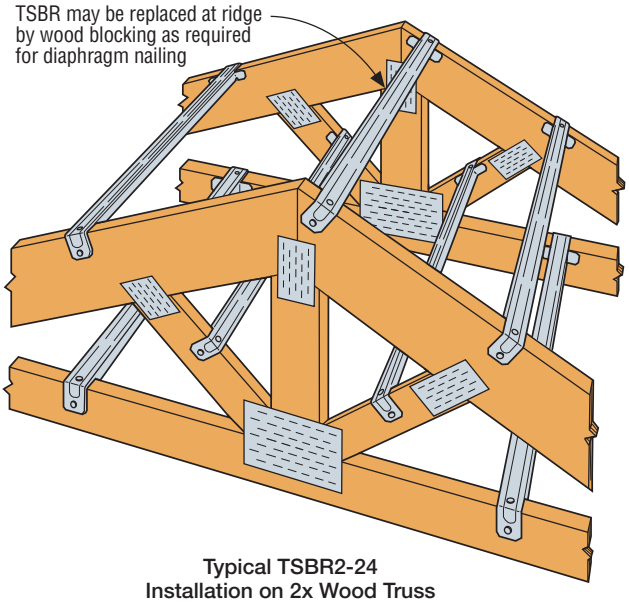

Typical TSBR2-24 Installation on 2x Wood Truss

Model No.	Dimensions (in.)			Fasteners (Total) (in.)	Allowable Loads (lb.)				Code Ref.
					DF/SP		SPF/HF		
	L	W	D		Compression	Tension	Compression	Tension	
TSBR2-16 (Min.)	17½	1¼	1¼	(2) 0.148 x 3	540	180	465	155	—
TSBR2-16 (Max.)	17½	1¼	1¼	(4) 0.148 x 1½	540	465	465	400	
TSBR2-24 (Min.)	25½	1¾	1	(2) 0.148 x 3	500	180	430	155	IBC, FL
TSBR2-24 (Max.)	25½	1¾	1	(4) 0.148 x 1½	500	465	430	400	

1. Loads may not be increased for duration of load.
2. Minimum nailing meets or exceeds the temporary lateral-restraint recommendations of SBCA/TPI BCSI.
3. **Fasteners:** Nail dimensions are listed diameter by length. See pp. 21–22 for fastener information.

C-C-2021 ©2021 SIMPSON STRONG-TIE COMPANY INC.

TBE

Truss Bearing Enhancer

The TBE transfers load from the truss or girder to plates for bearing-limited conditions and provides exceptional uplift capacity. It replaces nail-on scabs that provide lower load transfer, or in some cases, an additional ply when needed for bearing. One size works with any number of girder plies.

The table lists allowable loads for TBE4 used on 2x4 and TBE6 used on 2x6 top plates. The table gives the different loads calculated for TBE with and without wood bearing. See Fastener Schedule and Alternative Installation below.

Material: 18 gauge

Finish: Galvanized; See Corrosion Information, pp. 12–15

Installation:

- Use all specified fasteners; see General Notes.
- TBE must be installed in pairs.
- Top-plate size is 2x4 for TBE4, 2x6 for TBE6. Use alternate installation for TBE4 and TBE6 on larger plates or pre-sheathed walls. See alternate installation below.

Codes: See p. 11 for Code Reference Key Chart

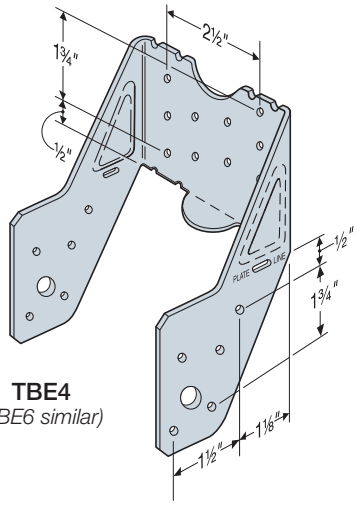

TBE4
(TBE6 similar)

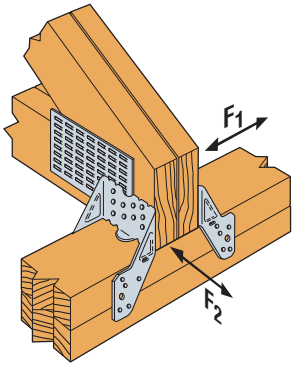

Two TBE Installed with Two-Ply Girder Truss

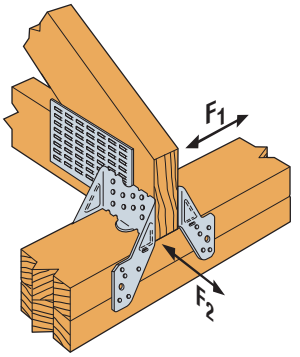

Two TBE Installed with Single-Ply Truss

TBE Fastener Schedule

Model No.	Truss Plies	Fasteners per each TBE (in.)	
		Rafter	Plate
TBE4	1	(10) 0.148 x 1½	(10) 0.148 x 1½
	2 or more	(10) 0.148 x 3	(10) 0.148 x 3
TBE6	1	(10) 0.148 x 1½	(10) 0.148 x 1½
	2 or more	(10) 0.148 x 3	(10) 0.148 x 3

1. **Fasteners:** Nail dimensions are listed diameter by length. See pp. 21–22 for fastener information.

Alternate Installation

Model No.	Alternate Installation Allowable Loads[5,6] Perpendicular to Plate			
	DF/SP		SPF/HF	
	(160)		(160)	
	F_2	F_3	F_2	F_3
TBE4	910	270	785	230
TBE6				

1. Use full table loads for uplift and parallel-to-plate allowable loads.
2. Download capacities are 0.80 of table loads.
3. See additional footnotes on p. 229.

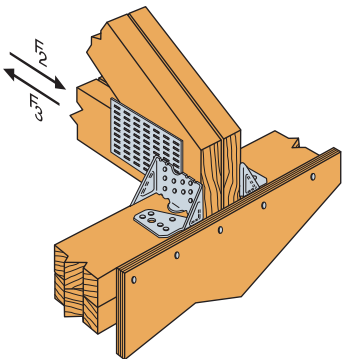

Pre-sheathed shearwall. Bend tab along slot and nail one leg to top of the plate.

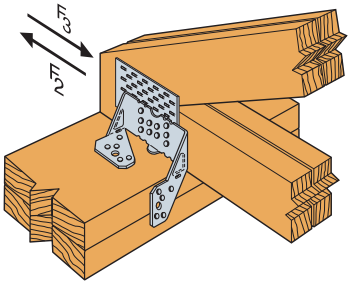

TBE6 Installed on Double 2x8 Top Plate

Alternative Installation Allowable Downloads are 0.80 and Allowable Uplift Loads are 1.0 of the TBE only table loads on p. 229.

Refer to Simpson Strong-Tie® technical bulletin T-C-HTIEBEAR at **strongtie.com** for alternative bearing enhancers.

C-C-2021 ©2021 SIMPSON STRONG-TIE COMPANY INC.

TBE

Truss Bearing Enhancer (cont.)

Model No.	Wall Top Plate	Top Plate or Truss Wood Species[2]	No. of Truss Plies	Allowable Loads[1,2,3]											Equivalent Bearing Length[7] of TBE and Top Plate (in.)				Code Ref.
				Uplift	Download								Lateral (160)						
					TBE Only				TBE and Wood Top Plate										
				(160)	(100)	(115)	(125)	(160)	(100)	(115)	(125)	(160)	F_1	F_2	(100)	(115)	(125)	(160)	
TBE4	2x4	Douglas Fir–Larch	1	730	2,100	2,100	2,100	2,100	5,380	5,380	5,380	5,380	380	855	5.44	5.73	5.88	5.88	IBC, FL
			2	730	2,100	2,100	2,100	2,100	8,665	8,665	8,665	8,665	380	855	4.68	4.69	4.69	4.69	
			3	730	2,100	2,100	2,100	2,100	11,945	11,945	11,945	11,945	380	855	4.29	4.29	4.29	4.29	
			4	730	2,100	2,100	2,100	2,100	15,225	15,225	15,225	15,225	380	855	4.09	4.09	4.09	4.09	
		Southern Pine	1	730	2,100	2,100	2,100	2,100	5,065	5,065	5,065	5,065	380	855	5.65	5.97	6.13	6.13	
			2	730	2,100	2,100	2,100	2,100	8,035	8,035	8,035	8,035	380	855	4.81	4.82	4.82	4.82	
			3	730	2,100	2,100	2,100	2,100	11,000	11,000	11,000	11,000	380	855	4.37	4.38	4.38	4.38	
			4	730	2,100	2,100	2,100	2,100	13,965	13,965	13,965	13,965	380	855	4.15	4.16	4.16	4.16	
		Spruce-Pine-Fir	1	730	1,815	1,815	1,815	1,815	4,045	4,045	4,045	4,045	340	855	5.95	6.32	6.56	6.76	
			2	730	1,815	1,815	1,815	1,815	6,280	6,280	6,280	6,280	340	855	5.01	5.15	5.15	5.15	
			3	730	1,815	1,815	1,815	1,815	8,510	8,510	8,510	8,510	340	855	4.5	4.6	4.6	4.6	
			4	730	1,815	1,815	1,815	1,815	10,740	10,740	10,740	10,740	340	855	4.25	4.32	4.32	4.32	
		Hem-Fir	1	730	1,815	1,815	1,815	1,815	3,940	3,940	3,940	3,940	340	855	6.07	6.45	6.71	6.92	
			2	730	1,815	1,815	1,815	1,815	6,070	6,070	6,070	6,070	340	855	5.08	5.23	5.23	5.23	
			3	730	1,815	1,815	1,815	1,815	8,195	8,195	8,195	8,195	340	855	4.55	4.65	4.65	4.65	
			4	730	1,815	1,815	1,815	1,815	10,320	10,320	10,320	10,320	340	855	4.29	4.36	4.36	4.36	
TBE6	2x6	Douglas Fir–Larch	1	880	2,360	2,425	2,425	2,425	7,515	7,580	7,580	7,580	270	910	7.44	7.73	7.93	8.09	
			2	880	2,360	2,425	2,425	2,425	12,675	12,740	12,740	12,740	270	910	6.68	6.86	6.96	6.96	
			3	880	2,360	2,425	2,425	2,425	17,830	17,895	17,895	17,895	270	910	6.29	6.41	6.47	6.47	
			4	880	2,360	2,425	2,425	2,425	22,985	23,050	23,050	23,050	270	910	6.09	6.71	6.82	6.9	
		Southern Pine	1	880	2,360	2,425	2,425	2,425	7,020	7,085	7,085	7,085	270	910	7.65	7.97	8.18	8.36	
			2	880	2,360	2,425	2,425	2,425	11,685	11,750	11,750	11,750	270	910	6.81	7.01	7.11	7.11	
			3	880	2,360	2,425	2,425	2,425	16,345	16,410	16,410	16,410	270	910	6.37	6.5	6.58	6.58	
			4	880	2,360	2,425	2,425	2,425	21,005	21,070	21,070	21,070	270	910	6.15	6.25	6.31	6.31	
		Spruce-Pine-Fir	1	880	2,040	2,320	2,425	2,425	5,545	5,825	5,930	5,930	270	785	7.95	8.32	8.55	8.76	
			2	880	2,040	2,320	2,425	2,425	9,055	9,335	9,440	9,440	270	785	7.01	7.23	7.38	7.51	
			3	880	2,040	2,320	2,425	2,425	12,560	12,840	12,945	12,945	270	785	6.5	6.66	6.75	6.84	
			4	880	2,040	2,320	2,425	2,425	16,065	16,345	16,450	16,450	270	785	6.25	6.37	6.44	6.5	
		Hem-Fir	1	880	2,040	2,320	2,425	2,425	5,380	5,660	5,765	5,765	270	785	8.07	8.45	8.7	8.92	
			2	880	2,040	2,320	2,425	2,425	8,725	9,005	9,110	9,110	270	785	7.08	7.32	7.48	7.61	
			3	880	2,040	2,320	2,425	2,425	12,065	12,345	12,450	12,450	270	785	6.55	7.32	7.48	7.61	
			4	880	2,040	2,320	2,425	2,425	15,405	15,685	15,790	15,790	270	785	6.29	6.41	6.49	6.55	

1. Loads are for a pair of TBEs.
2. When truss chord wood species is different from the wall top-plate wood species, choose the tabulated allowable loads based on the species with the lower tabulated download capacity.
3. Uplift and lateral loads have been increased for wind or earthquake loading, with no further increase allowed; reduce where other loads govern.
4. Allowable loads are determined only by nail shear calculations or tests of the metal connectors based on the lowest of 0.125" of deflection or the ultimate load with a safety factor of 3. The attached wood members must be designed to withstand the loads imposed by the nails.
5. Perpendicular-to-Plate loads are reduced for Alternative Installation.
6. Parallel-to-Plate loads are not reduced for Alternative Installation.
7. The width of bearing wall required to provide the same bearing capacity as the TBE Allowable Load (TBE and Wood Top Plate) is referred to as the Equivalent Bearing Length.

C-C-2021 ©2021 SIMPSON STRONG-TIE COMPANY INC.

Scissor Truss Connector

The TC truss connector is an ideal connector for scissor trusses and can allow horizontal movement up to 1¼". The TC also attaches plated trusses to top plates or sill plates to resist uplift forces. Typically used on one or both ends of truss as determined by the designer.

Material: 16 gauge

Finish: Galvanized

Installation:

- Use all specified fasteners; see General Notes.
- Drive 0.148" x 3" nails into the truss at the inside end of the slotted holes (inside end is towards the center of the truss and clinch on back side). Do not seat these nails into the truss — allow room under the nail head for movement of the truss with respect to the wall.
- After installation of roofing materials nails may be required to be fully seated into the truss. (As required by the designer or Truss Designer.)

Optional TC Installation:

- Bend one flange up 90°. Drive specified nails into the top and face of the top plates or install Titen Turbo™ screws into the top and face of masonry wall. See optional load tables and installation details.

Codes: See p. 11 for Code Reference Key Chart

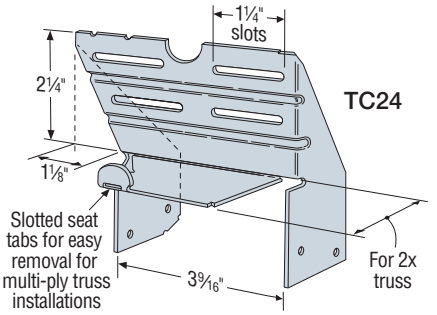

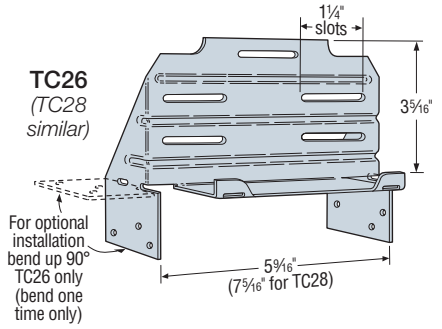

Model No.	Fasteners (in.)		DF/SP Allowable Loads	SPF/HF Allowable Loads	Code Ref.
	Truss	Plate	Uplift (160)	Uplift (160)	
TC24	(4) 0.148 x 3	(4) 0.148 x 3	350	300	IBC, FL
TC26	(5) 0.148 x 3	(6) 0.148 x 3	575	495	
TC28	(5) 0.148 x 3	(6) 0.148 x 3	575	495	

See footnotes below.

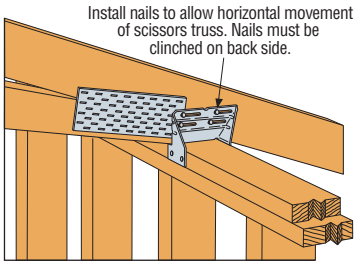

Typical TC24 Installation

Optional TC Installation Table

Model No.	Fasteners (in.)		DF/SP Allowable Loads	SPF/HF Allowable Loads	Masonry Allowable Loads	Code Ref.
	Truss	Plate	Uplift (160)	Uplift (160)	Uplift (160)	
TC26	(5) 0.148 x 1½	(6) 0.148 x 1½	370	300	—	IBC, FL
	(5) 0.148 x 3	(6) 0.148 x 3	385	335	—	
	(5) 0.148 x 3	(6) ³⁄₁₆ x 2¼ Titen Turbo	—	—	170	

1. Loads have been increased for wind or earthquake loading, with no further increase allowed. Reduce where other loads govern.
2. Grout strength is 2,000 psi minimum.
3. Nail values based on single 2x truss. 0.148" x 3" joist nails must be clinched.
4. Optional TC26 installation with 0.148" x 3" nails requires minimum 3" top-plate thickness.
5. **Fasteners:** Nail dimensions are listed diameter by length. Titen Turbo screws are Simpson Strong-Tie concrete and masonry screws. See pp. 21–22 for fastener information.

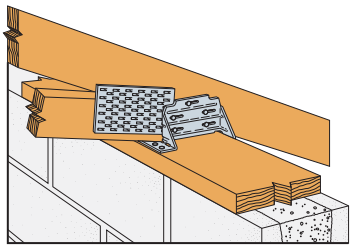

Optional TC26 Installation for Grouted Concrete Block using a Wood Nailer
(8", 10", 12" wall installation similar)

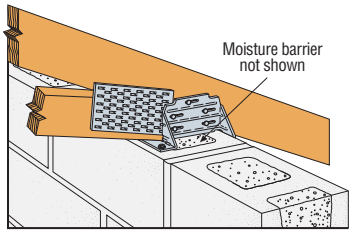

Optional TC26 Installation for Grouted Concrete Block using Titen Screws

C-C-2021 ©2021 SIMPSON STRONG-TIE COMPANY INC.

HTC

Heavy Truss Clip

For alignment control between a roof truss and nonbearing walls; the 2½" slot permits vertical truss chord movement when loads are applied.

Material: 18 gauge

Finish: Galvanized

Installation:

- Use all specified fasteners; see General Notes
- The HTC has a 2½" slot to accommodate truss movement
- This connector has high lateral capacity
- The S/HTC is available for steel truss applications
- Products not intended for floor applications due to the frequency of floor joist deflections and potential for squeaks

Codes: See p. 11 for Code Reference Key Chart

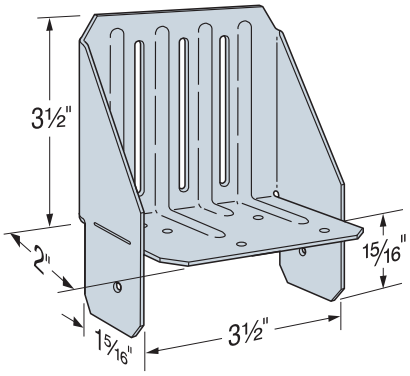

HTC4

Model No.	Dimensions	Fasteners (in.)		Allowable Loads1 (160)				Code Ref.
	Top Plate	Base	Slot	Without Gap[2]		With 1¼" Gap[3]		
				F_1	F_2	F_1	F_2	
HTC4	2x4 plate	(6) 0.148 x 3	(3) 0.148 x 3	370	305	85	255	IBC, FL, LA
	2x6 plate	(6) 0.148 x 3	(3) 0.148 x 3	410	265	155	250	

1. Loads have been increased for wind or earthquake loading, with no further increase allowed. Reduce where other loads govern.
2. Truss or rafter must bear on top plate to achieve the allowable loads under "Without Gap."
3. When installed with maximum 1¼" space between rafter or truss and top plate, use loads under "With 1¼" Gap." Where loads are not required, space is not limited to 1¼".
4. **Fasteners:** Nail dimensions are listed diameter by length. See pp. 21–22 for fastener information.

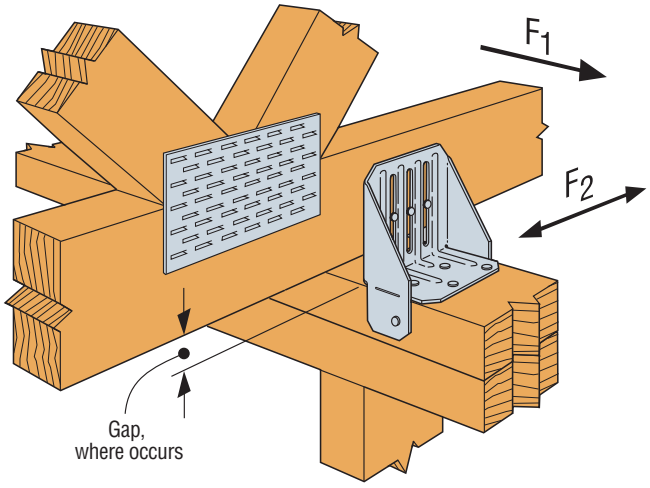

Typical HTC4 Installation on a 2x4 Plate

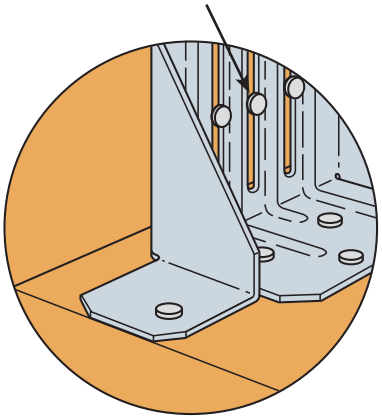

Typical HTC4 Installation on a 2x6 or Larger Plate

C-C-2021 ©2021 SIMPSON STRONG-TIE COMPANY INC.

STC/STCT/DTC

Roof Truss Clips

For alignment control between a roof truss and nonbearing walls; the 1½" slot permits vertical truss chord movement when loads are applied.

Material: 18 gauge

Finish: Galvanized

Installation:

- Use all specified fasteners; see General Notes.
- Use STC or DTC depending on required loads. STC, installed with DS drywall stop, helps prevent fasteners tearing through the ceiling drywall (see illustration).
- Use STCT where truss or rafter is separated from the top plate of the nonbearing wall.
- Install slot nails in the middle of the slot.
- Products not intended for floor applications due to the frequency of floor joist deflections and potential for squeaks.

Options:

- For alternative solutions, see SDPW on p. 339.

Codes: See p. 11 for Code Reference Key Chart

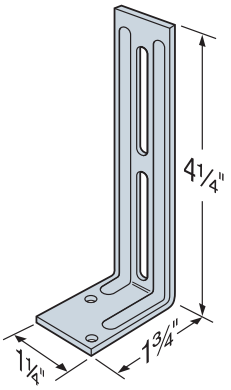

STCT

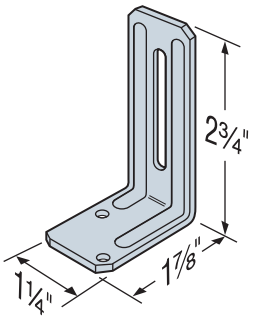

STC

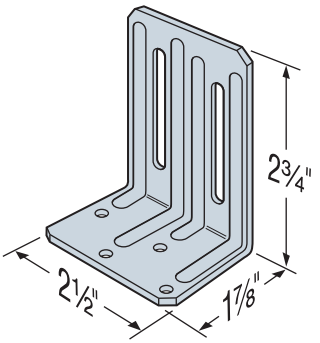

DTC

Model No.	Fasteners (in.)		Allowable Loads (160)						Code Ref.
	Base	Slot	Without Gap		¼" Max. Gap		¼" < Gap ≤ ½"		
			F_1	F_2	F_1	F_2	F_1	F_2	
STC	(2) 0.131 x 2½	(1) 0.131 x 2½	70	55	35	30	25	40	IBC, FL, LA
STCT	(2) 0.131 x 2½	(1) 0.131 x 2½	70	55	35	30	25	40	
DTC	(4) 0.131 x 2½	(2) 0.131 x 2½	125	200	80	125	55	70	

1. Loads may not be increased for duration of load.
2. Truss or rafter must bear on top plate to achieve the allowable loads under "Without Gap."
3. Clips are required on both sides of the truss to achieve F_1 loads in both directions (stagger parts to avoid nail interferences).
4. **Fasteners:** Nail dimensions are listed diameter by length. See pp. 21–22 for fastener information.

Nails should not be driven completely flush against the connector, to allow vertical truss movement.

Allow 1/16" gap between nail head and truss clip to help prevent squeaking.

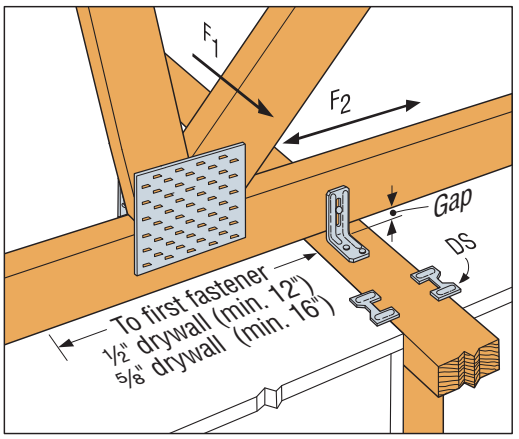

Typical STC Installation with DS
(see p. 314 for Drywall Stop)

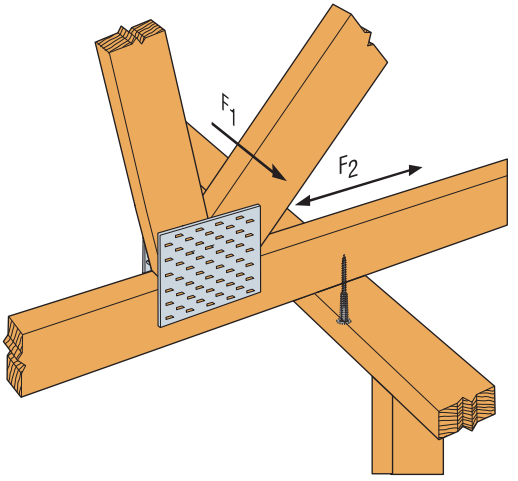

Typical Strong-Drive® SDPW Deflector Screw Installation
(see p. 339 for more information)

C-C-2021 ©2021 SIMPSON STRONG-TIE COMPANY INC.

GBC

Gable Brace Connector

This product is preferable to similar connectors because of (a) easier installation, (b) higher loads, (c) lower installed cost, or a combination of these features.

The GBC provides a proven, tested connection for the anchorage of building stability bracing to the top of the gable end wall. With allowable bracing installation angles between 40° to 60°, the GBC offers greater flexibility in a connector rated for both tension and compression loads.

Material: 16 gauge **Finish:** Galvanized

Installation:

- Use all specified fasteners; see General Notes
- The GBC must be installed in pairs to achieve full load capacity

Codes: See p. 11 for Code Reference Key Chart

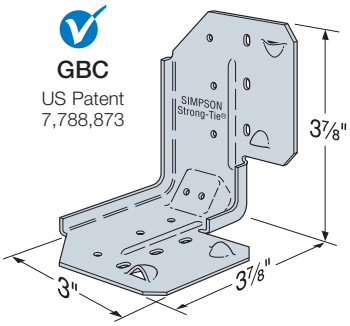

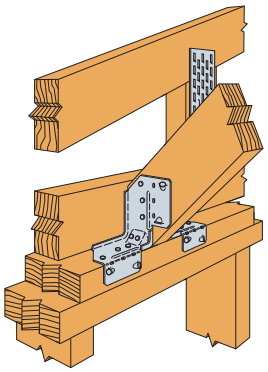

Typical GBC Installation

Model No.	Qty Req'd	Fasteners per Connector (in.)		DF/SP Allowable Loads (160) Perpendicular to Endwall (F_2)				SPF/HF Allowable Loads (160) Perpendicular to Endwall (F_2)				Code Ref.
				Toward GBC		Away from GBC		Toward GBC		Away from GBC		
		Gable Brace	Top Plates	Gable Brace Angle		Gable Brace Angle		Gable Brace Angle		Gable Brace Angle		
				40°–45°	46°–60°	40°–45°	46°–60°	40°–45°	46°–60°	40°–45°	46°–60°	
GBC	2	(5) 0.131 x 1½	(7) 0.131 x 2½	650	825	400	305	545	695	335	255	IBC, FL

1. For 1¾" x 3½" (or larger) LVL gable brace, the allowable load at 40° to 45° is 635 lb. towards anchors, 515 lb. away from anchors.
2. Loads have been increased for wind or earthquake loading, with no further increase allowed. Reduce where other loads govern.
3. Use a minimum 2x4 gable brace. Larger members may be used.
4. **Fasteners:** Nail dimensions are listed diameter by length. See pp. 21–22 for fastener information.

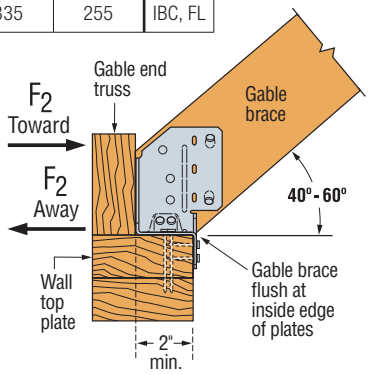

Typical Sloped Installation

GBC Installation Sequence

Slope	H Dimension
40°	2 15/16
50°	3 1/16
60°	3 9/16

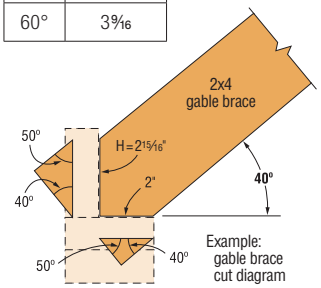

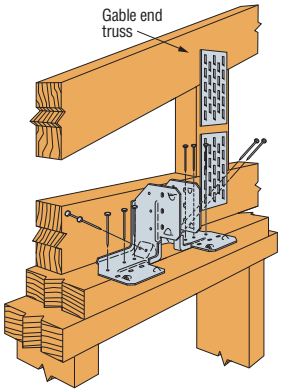

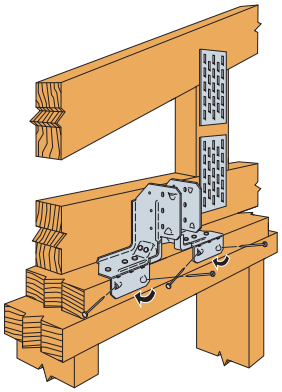

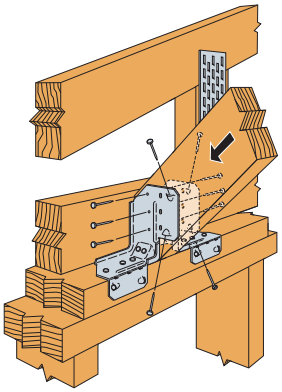

Step 1
Double angle cut the gable brace to sit flat on the wall double top plate and flush against the gable end truss for 2x4 top plate. The double angle cuts should form a 90° angle on the end of the gable brace.

Step 2
Set each GBC on top of the double top plate so that the bend line slots are flush with the inside edge of the double top plate. Install fasteners into the top of the double top plate.

Step 3
Bend GBC legs (one time only) over the inside of the double top plate and install fasteners.

Step 4
Install fasteners into the gable brace.

Note: Attach the other end of the gable brace to blocking at the roof diaphragm as directed by the designer.

C-C-2021 ©2021 SIMPSON STRONG-TIE COMPANY INC.

CHC

Component Hoist Clip

The CHC component hoist clip provides a tested, load-rated solution for the safe lifting and placement of assembled wood components. The CHC is load-rated with Strong-Drive® SDS Heavy-Duty Connector screws for easy installation and removal, and superior shear and withdrawal strength during lifting.

Features:

- Attaches easily to wood members using Strong-Drive SDS Heavy-Duty Connector screws (sold separately)
- May be used alone or in pairs for increased load
- Tested in multiple load directions for versatility

Material: 12 gauge

Finish: Galvanized

Installation:

- Use all specified fasteners; see General Notes
- Fasteners require full penetration into the framing members
- Use one time only
- Lifting devices should be connected to the CHC with a closed-loop attachment of sufficient strength to carry the allowable load

Codes: See p. 11 for Code Reference Key Chart

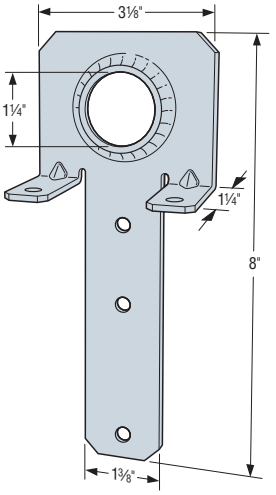

CHC
US Patent 8,720,129

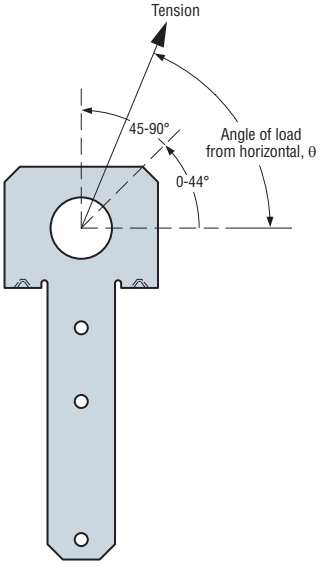

CHC with Tension Load Applied

Allowable Loads

Model No.	Qty.	Type of Connection	SDS Fasteners per Part		Angle from Horizontal, θ	Line Angle, α	Allowable Tension DF/SP/SPF/HF (125)	Code Ref.
			Top	Face				
CHC	1	1	(2) ¼" x 3"	(3) ¼" x 3"	0–44	—	610	—
	1	1			45–90	—	975	
	2	1			30	120	610	
	2	1			45	90	1,380	
	2	1			60	60	1,690	
	2	2			90	—	1,950	

1. Allowable loads are based on the lowest ultimate test load of three test specimens, or the average of six specimens, divided by five.
2. Loads may not be increased for duration of load.
3. Allowable loads are based on installation over sheathing on stud walls with double 2x top plates and maximum ⅝" sheathing.
4. Fasteners require full penetration into the framing members.
5. All lifting devices and spreader bars that are used in conjuction with the CHC shall be of sufficient strength to carry the required load. Spreader bars must also have sufficient rigidity to resist bending of the lifted component.

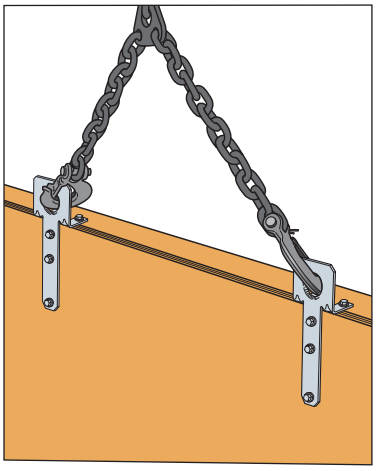

Typical CHC Installation Using Two Parts

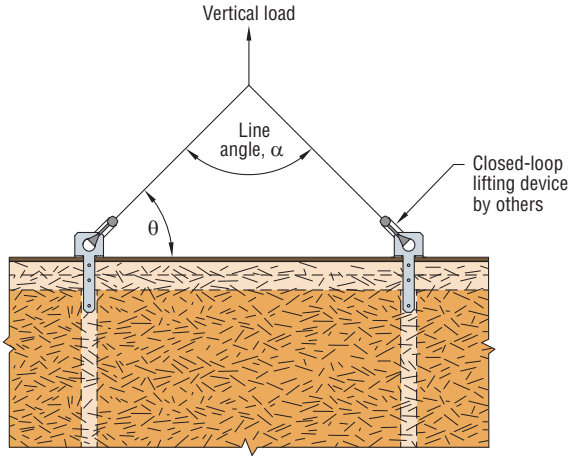

1 Typical CHC Installation with Angular Loading

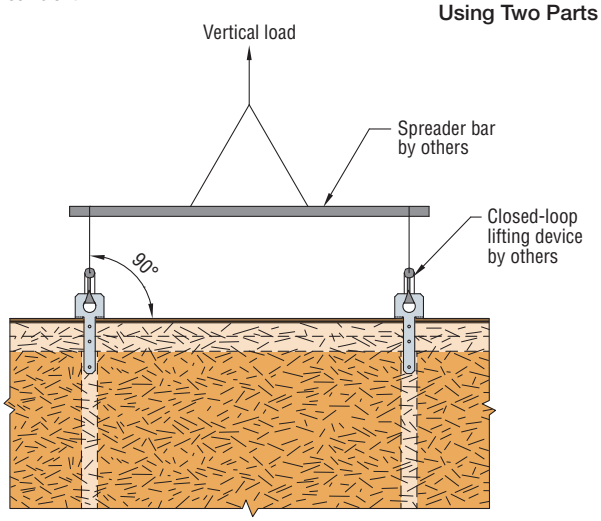

2 Typical CHC Installation with Spreader Bar

C-C-2021 ©2021 SIMPSON STRONG-TIE COMPANY INC.

DGF/DGBF/DGHF

Fire Wall Hangers

The DGF fire wall hanger is ideal for multi-family, multi-level building construction and easily installs on a two-hour wood stud fire wall (e.g., Type III construction) during framing. The new series features three models of top-flange hangers that connect floor trusses and joists to wood stud walls. The hangers feature enough space for two layers of ⅝" gypsum board (drywall) to be slipped into place after the framing is complete.

They have been tested according to ASTM E814 and received F (flame) and T (temperature) ratings for use on one or both sides of the wall. These ratings verify that the DGF/DGHF/DGBF hangers do not reduce the two-hour fire wall assembly rating.

Features:

- Fire-resistant F (flame) and T (temperature) rated in Intertek Design No. SST/WPCF 120-01.
- No need for additional restraint against rotation of the wall top plates.
- All models can be used on both sides of a 2x6 wall.

Material: DGBF — 7 gauge; DGF — 12 gauge; DGHF — 10 gauge

Finish: DGF — G90; DGHF and DGBF — gray paint

Installation:

- Use all specified fasteners.
- All models are mounted like a standard top-flange hanger.
- Stud wall-plate splices must occur at a stud location.
- I-joist require web stiffeners for full table loads. I-joist without web stiffeners have reduced loads shown in table.
- DGF welded to steel header with four 2" fillet welds and (6) joist nails achieves a download of 1,650 lb.
- DGHF and DGBF welded to steel header with two 2" fillet weld and (8) 0.148" x 1½" joist nails achieve a download of 3,000 lb.
- Weld size to match hanger thickness.
- Table uplift loads apply to welded applications.
- DGBF only — apply two ¼" beads of fire-resistant mortar caulk directly to top of wall plates for the first 6" on either side of top flange. See Intertek design listing for detail.
- DGBF only — locate double stud below hanger.
- Gap at the face of the hanger allows two layers of ⅝" gypsum board to be installed after the hanger is in place.

Options:

- All models of the DGHF hanger may be ordered with a skew angle of up to 45 degrees or with the top flange offset left or right. To order, add "X" to the model number.

Codes: See p. 11 for Code Reference Key Chart

Two-Hour, Fire-Rated Wall

Simpson Strong-Tie has completed ASTM E814 standard testing at an accredited laboratory. The use of the DGF/DGBF/DGHF hangers does not reduce the two-hour, fire wall assembly rating. The hangers tested provide an F (flame) and T (temperature) rating.

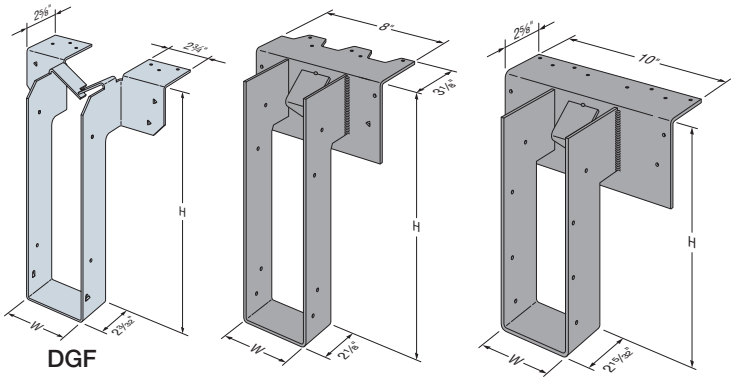

DGF DGHF DGBF

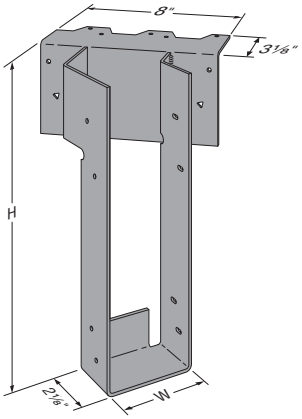

DGHF3.62/11.88 Skewed Right

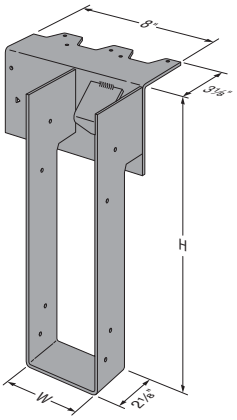

DGHF Top Flange Offset Left

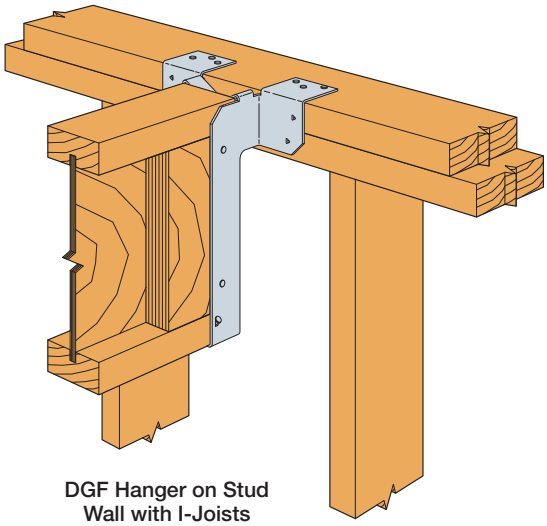

DGF Hanger on Stud Wall with I-Joists

C-C-2021 ©2021 SIMPSON STRONG-TIE COMPANY INC.

DGF/DGBF/DGHF

Fire Wall Hangers (cont.)

Allowable Loads on 2x4 or 2x6 Wall

Model	Ga.	Joist Depth (in.)	Fasteners (in.)			Web Stiff Req'd	DF/SP				SPF/HF				Code Ref.
							Uplift (160)	Download (100/125)			Uplift (160)	Download (100/125)			
			Top	Face	Joist			Studwall	2x, 3x Nailer	(2) 2x, 4x Nailer		Studwall	2x, 3x Nailer	(2) 2x, 4x Nailer	
DGF	12	7¼ to 11¼	(6) 0.148 x 3	(4) 0.148 x 3	(2) 0.148 x 1½	—	130	1,160	—	1,160	110	1,130	—	1,130	IBC, FL, LA
			(6) 0.148 x 1½	—	(6) 0.148 x 1½	✓	220	1,350	1,350	1,350	190	1,315	1,315	1,315	
			(6) 0.148 x 3	—	(6) 0.148 x 1½	✓	315	1,420	—	1,420	270	1,385	—	1,385	
DGF	12	11⅞ to 24	(6) 0.148 x 3	(4) 0.148 x 3	(2) 0.148 x 1½	—	130	1,160	—	1,160	110	1,130	—	1,130	
			(6) 0.148 x 1½	—	(6) 0.148 x 1½	✓	315	1,620	1,620	1,620	270	1,450	1,450	1,450	
			(6) 0.148 x 3	—	(6) 0.148 x 1½	✓	315	1,705	—	1,705	270	1,525	—	1,525	
DGHF	10	7¼ to 24	(5) 0.148 x 1½	(2) 0.148 x 3	(8) 0.148 x 1½	✓	855	2,030	2,030	2,030	650	1,855	1,855	1,855	
			(5) 0.148 x 3	(2) 0.148 x 3	(8) 0.148 x 1½	✓	900	2,135	—	2,135	770	1,950	—	1,950	
DGBF (over studs)	7	9½ to 24	(8) 0.148 x 3	(4) 0.148 x 3	(8) 0.148 x 3	✓	1,040	3,015	—	3,015	890	2,280	—	2,280	
DGHF (skewed)	10	7¼ to 24	(5) 0.148 x 3	(2) 0.148 x 3	(8) 0.148 x 1½	✓	315	1,620	—	1,620	270	1,350	—	1,350	—
DGHF (offset)	10	7¼ to 24	(5) 0.148 x 3	(2) 0.148 x 3	(8) 0.148 x 1½	✓	870	2,010	—	2,010	755	1,705	1,550	—	

1. Uplift loads have been increased for earthquake or wind loading with no further increase allowed. Reduce where other loads govern.
2. Allowable loads are for 2x4 minimum stud wall or nailer. Back-to-back installations require a minimum 2x6. Wall design by designer.
3. For hangers spaced closer than 16" o.c., the allowable load shall be reduced proportionately.
4. DGBF installation requires a minimum (2) 2x4 stud or post in the wall at hanger location. Post design by designer.
5. DGHF hangers may be skewed up to 45. Skew and offset options cannot be combined.
6. Face nails for DGHF (offset) may be installed in any two holes.
7. DGF and DGHF may be installed over ⅝" maximum wood structural panel sheathing. For DGF, use 0.87 of the table loads for uplift and download. For DGHF, use 0.91 of table loads for uplift and full table downloads. Sheathing shall be installed flush with top of the wall and fastened per code.
8. **Fasteners:** Nail dimensions are listed diameter by length. See pp. 21–22 for fastener information.

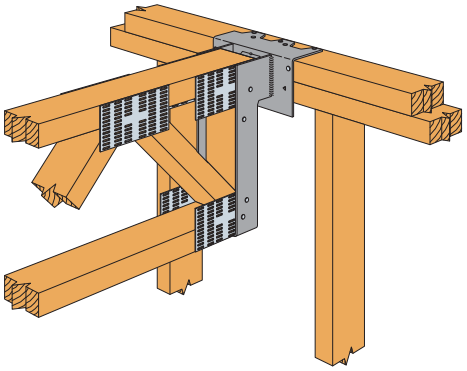

DGF Hanger on Stud Wall with Trusses

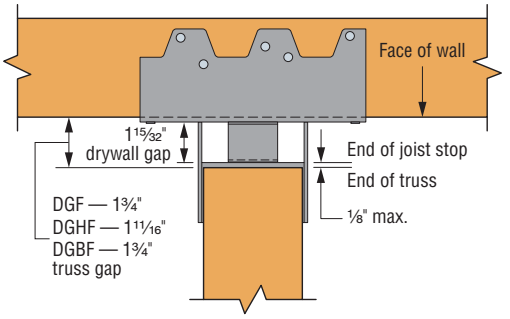

DGHF Hanger *(DGF similar)* Top View with Gap

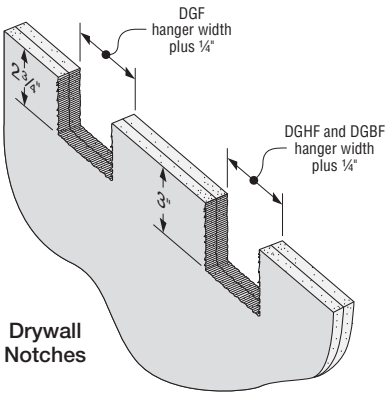

Drywall Notches

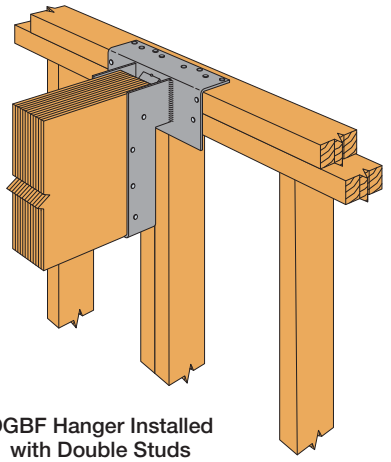

DGBF Hanger Installed with Double Studs

C-C-2021 ©2021 SIMPSON STRONG-TIE COMPANY INC.

Fire Wall Hangers (cont.)

Model Sizes

Joist Size (in.)	DGF Model	DGHF Model	DGBF Model	W (in.)	H (in.)
2x8	DGF28	—	—	1 9/16	7 1/8
2x10	DGF210	—	—	1 9/16	9 1/8
2x12	DGF212	—	—	1 9/16	11 1/8
1 3/4 x 9 1/2	DGF1.81/9.5	DGHF1.81/9.5	—	1 13/16	9 7/16
1 3/4 x 11 7/8	DGF1.81/11.88	DGHF1.81/11.88	—	1 13/16	11 13/16
1 3/4 x 14	DGF1.81/14	DGHF1.81/14	—	1 13/16	13 15/16
1 3/4 x 16	DGF1.81/16	DGHF1.81/16	—	1 13/16	15 15/16
2 x 9 1/2	DGF2.1/9.5	DGHF2.1/9.5	—	2 1/8	9 7/16
2 x 11 7/8	DGF2.1/11.88	DGHF2.1/11.88	—	2 1/8	11 13/16
2 x 14	DGF2.1/14	DGHF2.1/14	—	2 1/8	13 15/16
2 x 16	DGF2.1/16	DGHF2.1/16	—	2 1/8	15 15/16
2 1/16 x 9 1/2	DGF2.1/9.5	DGHF2.1/9.5	—	2 1/8	9 7/16
2 1/16 x 11 7/8	DGF2.1/11.88	DGHF2.1/11.88	—	2 1/8	11 13/16
2 1/16 x 14	DGF2.1/14	DGHF2.1/14	—	2 1/8	13 15/16
2 1/16 x 16	DGF2.1/16	DGHF2.1/16	—	2 1/8	15 15/16
2 5/16 x 9 1/2	DGF2.37/9.5	DGHF2.37/9.5	—	2 3/8	9 7/16
2 5/16 x 11 7/8	DGF2.37/11.88	DGHF2.37/11.88	—	2 3/8	11 13/16
2 5/16 x 14	DGF2.37/14	DGHF2.37/14	—	2 3/8	13 15/16
2 5/16 x 16	DGF2.37/16	DGHF2.37/16	—	2 3/8	15 15/16
2 5/16 x 18	DGF2.37/18	DGHF2.37/18	—	2 3/8	17 15/16
2 5/16 x 20	DGF2.37/20	DGHF2.37/20	—	2 3/8	19 15/16
2 1/2 x 9 1/2	DGF2.56/9.5	DGHF2.56/9.5	—	2 5/8	9 7/16
2 1/2 x 11 7/8	DGF2.56/11.88	DGHF2.56/11.88	—	2 5/8	11 13/16
2 1/2 x 14	DGF2.56/14	DGHF2.56/14	—	2 5/8	13 15/16
2 1/2 x 16	DGF2.56/16	DGHF2.56/16	—	2 5/8	15 15/16
2 1/2 x 18	DGF2.56/18	DGHF2.56/18	—	2 5/8	17 15/16
2 1/2 x 20	DGF2.56/20	DGHF2.56/20	—	2 5/8	19 15/16
2 1/2 x 22	DGF2.56/22	DGHF2.56/22	—	2 9/16	21 15/16
2 1/2 x 24	DGF2.56/24	DGHF2.56/24	—	2 9/16	23 15/16
3 1/2 x 9 1/4	DGF3.62/9.25	DGHF3.62/9.25	DGBF3.62/9.25	3 5/8	9 3/16
3 1/2 x 9 1/2	DGF3.62/9.5	DGHF3.62/9.5	DGBF3.62/9.5	3 5/8	9 7/16
3 1/2 x 11 1/4	DGF3.62/11.25	DGHF3.62/11.25	DGBF3.62/11.25	3 5/8	11 3/16
3 1/2 x 11 7/8	DGF3.62/11.88	DGHF3.62/11.88	DGBF3.62/11.88	3 5/8	11 13/16
3 1/2 x 14	DGF3.62/14	DGHF3.62/14	DGBF3.62/14	3 5/8	13 15/16
3 1/2 x 16	DGF3.62/16	DGHF3.62/16	DGBF3.62/16	3 5/8	15 15/16
3 1/2 x 18	DGF3.62/18	DGHF3.62/18	DGBF3.62/18	3 5/8	17 15/16
3 1/2 x 20	DGF3.62/20	DGHF3.62/20	DGBF3.62/20	3 5/8	19 15/16
3 1/2 x 22	DGF3.62/22	DGHF3.62/22	DGBF3.62/22	3 5/8	21 15/16
3 1/2 x 24	DGF3.62/24	DGHF3.62/24	DGBF3.62/24	3 5/8	23 15/16
5 1/4 x 11 7/8	—	—	DGBF5.37/11.88	5 3/8	11 13/16
5 1/4 x 14	—	—	DGBF5.37/15	5 3/8	11 15/16
5 1/4 x 16	—	—	DGBF5.37/16	5 3/8	15 15/16
5 1/4 x 18	—	—	DGBF5.37/18	5 3/8	17 15/16
5 1/4 x 20	—	—	DGBF5.37/20	5 3/8	19 15/16
5 1/4 x 22	—	—	DGBF5.37/22	5 3/8	21 15/16
5 1/4 x 24	—	—	DGBF5.37/24	5 3/8	23 15/16
5 1/8 glulam	—	—	DGBF5.25	5 1/4	SPEC
5 1/2 glulam and 6x	—	—	DGBF5.56	5 9/16	SPEC
6 3/4 glulam	—	—	DGBF6.88	6 7/8	SPEC
7 x 11 7/8	—	—	DGBF7.12/11.88	7 1/8	11 13/16
7 x 14	—	—	DGBF7.12/14	7 1/8	13 15/16
7 x 16	—	—	DGBF7.12/16	7 1/8	15 15/16
7 x 18	—	—	DGBF7.12/18	7 1/8	17 15/16
7 x 20	—	—	DGBF7.12/20	7 1/8	19 15/16
7 x 22	—	—	DGBF7.12/22	7 1/8	21 15/16
7 x 24	—	—	DGBF7.12/24	7 1/8	23 15/16

C-C-2021 ©2021 SIMPSON STRONG-TIE COMPANY INC.

DU/DHU/DHUTF

Fire Wall Hangers

The DU/DHU face-mount and the DHUTF top-mount hangers are designed to carry joist floor loads to a wood stud wall through two layers of ⅝" gypsum board (drywall). These hangers install after the drywall is in place. The hangers come in sizes that accommodate most joists used in multi-family construction including I-joists and trusses.

All three fire wall hangers are fire-resistant F (flame) and T (temperature) rated in Intertek Design No. SST/WPCF 120-01.

Material: DU — 14 gauge; DHU and DHUTF — 12 gauge

Finish: Galvanized

Installation: • Use all specified fasteners; see General Notes.

- Strong-Drive® SDS Heavy-Duty Connector screws are provided with the hanger.
- Drywall is installed first.
- DU and DHU are mounted with top of hanger flush with top of wall and tight to the drywall.
- Wall top plates must be restrained to prevent rotation. Where gravity load on top of wall is less than 150 plf, use a stud plate tie connector at the back of each stud or provide equivalent restraint by another method as determined by designer.
- Stud wall top plate splices must occur at a stud location.

Options: • The DHU may be ordered with one flange concealed for widths at least 2½" wide; specify which flange when ordering. Use 74% of the table downloads and 100% of table uplift loads.

- The DHU/DHUTF may be ordered skewed up to 45°. Use 75% of the table downloads and 50% of table uplift loads.

Codes: See p. 11 for Code Reference Key Chart

Two-Hour, Fire-Rated Wall

Simpson Strong-Tie has completed ASTM E814 standard testing at an accredited laboratory. The use of the DU/DHU/DHUTF hangers does not reduce the two-hour, fire wall assembly rating. The hangers tested provide an F (flame) and T (temperature) rating.

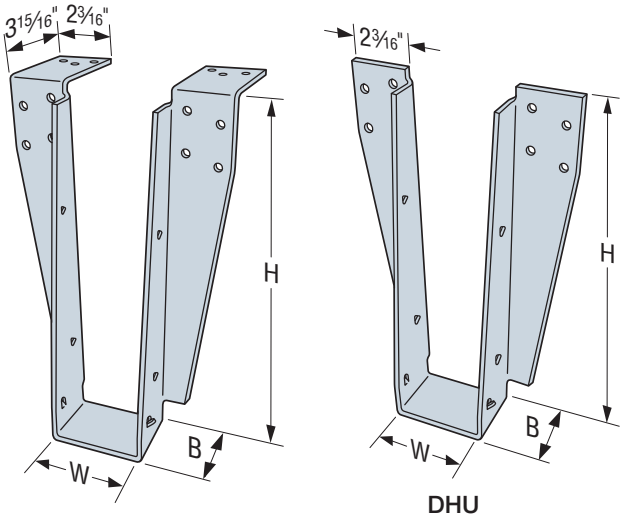

DHUTF
US Patent 9,394,680

DHU
(DU similar)
US Patent 9,394,680

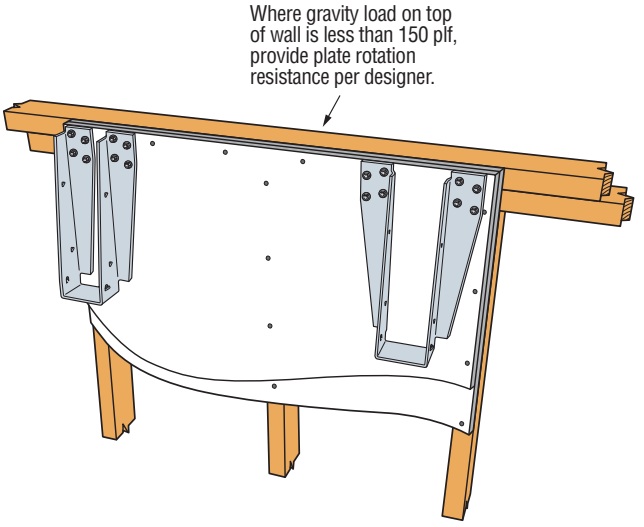

Typical Installation Showing DHU with Concealed Flange Option (at left) and a DHU Standard Installation

Allowable Loads

Model	Condition[1]	DF/SP Allowable Loads		SPF/HF Allowable Loads		Code Ref.
		Uplift (160)[3,4]	Down (100)[2]	Uplift (160)[3]	Down (100)[2]	
DU	Over (2) layers ⅝" drywall	95	1,110	170	880	IBC, FL, LA
DHU DHUTF	Over (2) layers ⅝" drywall	95	1,410	170	1,185	

1. Loads assume ⅝" Type X drywall attached per IBC. Wall assembly must consist at a minimum of two 2x4 plate members with studs spaced not more than 16" o.c. For alternative solutions to mounting over a single layer of drywall, refer to the technical bulletin T-C-TFWALL at **strongtie.com**.
2. Hangers spaced closer than 16" o.c. shall reduce allowable load proportionately.
3. Triangular nail holes may be filled with (4) additional 0.148" x 1½" to achieve an allowable upliftl load of 750 lb.
4. DF carried members with a minimum of 1½" x 2½" solid sawn chord dimensions may increase Allowable Uplift Load to 170 lb.
5. Allowable downloads may be increased to 1,885 lb. for DF/SP and 1,585 lb. for SPF/HF using the DHU3.56/24 or DHUTF3.56/24 models.
6. For a DHU/DHUTF two-sided (back-to-back) application on a 2x6 wall, use 1,200 lb. allowable download for DF/SP plates and use 1,005 lb. for SPF/HF plates.
7. For a DU two-sided (back-to-back) application on a 2x6 wall, use 1,075 lb. allowable download for DF/SP plates and 880 lb. for SPF/HF plates.
8. For installations of two layers of gypsum wall board over ⅝" maximum wood structural panel, the DHU/DHUTF has an allowable download of 1,975 lb. for DF/SP plates and 1,660 lb. for SPF/HF plates.
9. For the DU, if a ⅝" structural wood panel is used between the drywall and the studs, use 1,110 lb. allowable download for DF/SP plates and 880 lb. for SPF/HF plates.

Fastener Table

Model	Ga.	B (in.)	Fasteners (in.)		
			Joist	Face	Top
DU	14	2	(2) 0.148 x 1½	(4) ¼ x 3½ SDS	—
DHU	12	2.5	(2) 0.148 x 1½	(8) ¼ x 3½ SDS	—
DHUTF	12	2.5	(2) 0.148 x 1½	(8) ¼ x 3½ SDS	(6) 0.148 x 1½

C-C-2021 ©2021 SIMPSON STRONG-TIE COMPANY INC.

DU/DHU/DHUTF

Fire Wall Hangers (cont.)

Joist Size (in.)	Face Mount		Top Flange	Dimensions (in.)	
	DU Models	DHU Models	DHUTF Models	W	H
2x10	DU210	DHU210	DHU210TF	1 9/16	9 1/8
2x12	DU212	DHU212	DHU212TF	1 9/16	11 1/8
1 3/4 x 9 1/2	DU1.81/9.5	DHU1.81/9.5	DHU1.81/9.5TF	1 13/16	9 7/16
1 3/4 x 11 7/8	DU1.81/11.88	DHU1.81/11.88	DHU1.81/11.88TF	1 13/16	11 13/16
1 3/4 x 14	DU1.81/14	DHU1.81/14	DHU1.81/14TF	1 13/16	13 15/16
1 3/4 x 16	—	DHU1.81/16	DHU1.81/16TF	1 13/16	15 15/16
2 x 9 1/2	DU2.1/9.5	DHU2.1/9.5	DHU2.1/9.5TF	2 1/8	9 7/16
2 x 11 7/8	DU2.1/11.88	DHU2.1/11.88	DHU2.1/11.88TF	2 1/8	11 13/16
2 x 14	DU2.1/14	DHU2.1/14	DHU2.1/14TF	2 1/8	13 15/16
2 x 16	—	DHU2.1/16	DHU2.1/16TF	2 1/8	15 15/16
2 1/16 x 9 1/2	DU2.1/9.5	DHU2.1/9.5	DHU2.1/9.5TF	2 1/8	9 7/16
2 1/16 x 11 7/8	DU2.1/11.88	DHU2.1/11.88	DHU2.1/11.88TF	2 1/8	11 13/16
2 1/16 x 14	DU2.1/14	DHU2.1/14	DHU2.1/14TF	2 1/8	13 15/16
2 1/16 x 16	DU2.1/16	DHU2.1/16	DHU2.1/16TF	2 1/8	15 15/16
2 5/16 x 9 1/2	DU2.37/9.5	DHU2.37/9.5	DHU2.37/9.5TF	2 3/8	9 7/16
2 5/16 x 11 7/8	DU2.37/11.88	DHU2.37/11.88	DHU2.37/11.88TF	2 3/8	11 13/16
2 5/16 x 14	DU2.37/14	DHU2.37/14	DHU2.37/14TF	2 3/8	13 15/16
2 5/16 x 16	DU2.37/16	DHU2.37/16	DHU2.37/16TF	2 3/8	15 15/16
2 5/16 x 18	—	DHU2.37/18	DHU2.37/18TF	2 3/8	17 15/16
2 1/2 x 9 1/2	—	DHU2.56/9.5	DHU2.56/9.5TF	2 9/16	9 7/16
2 1/2 x 11 7/8	—	DHU2.56/11.88	DHU2.56/11.88TF	2 9/16	11 13/16
2 1/2 x 14	—	DHU2.56/14	DHU2.56/14TF	2 9/16	13 15/16
2 1/2 x 16	—	DHU2.56/16	DHU2.56/16TF	2 9/16	15 15/16
2 1/2 x 18	—	DHU2.56/18	DHU2.56/18TF	2 9/16	17 15/16
2 1/2 x 20	—	DHU2.56/20	DHU2.56/20TF	2 9/16	19 15/16
3 1/2 x 9 1/2	—	DHU3.56/9.5	DHU3.56/9.5TF	3 9/16	9 7/16
3 1/2 x 11 7/8	—	DHU3.56/11.88	DHU3.56/11.88TF	3 9/16	11 13/16
3 1/2 x 14	—	DHU3.56/14	DHU3.56/14TF	3 9/16	13 15/16
3 1/2 x 16	—	DHU3.56/16	DHU3.56/16TF	3 9/16	15 15/16
3 1/2 x 18	—	DHU3.56/18	DHU3.56/18TF	3 9/16	17 15/16
3 1/2 x 20	—	DHU3.56/20	DHU3.56/20TF	3 9/16	19 15/16
3 1/2 x 22	—	DHU3.56/22	DHU3.56/22TF	3 9/16	21 15/16
3 1/2 x 24	—	DHU3.56/24	DHU3.56/24TF	3 9/16	23 15/16

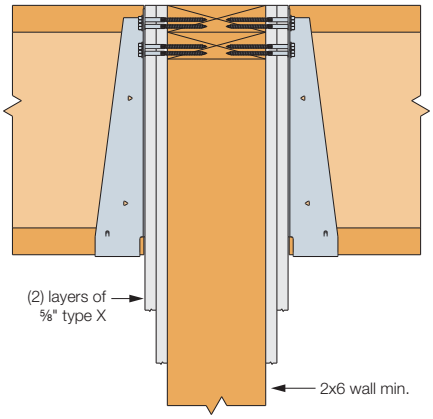

Two-Sided Installation
Over (2) Layers of Drywall

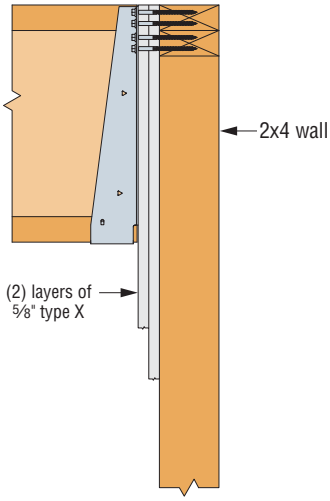

Typical Installation over
(2) Layers of Drywall

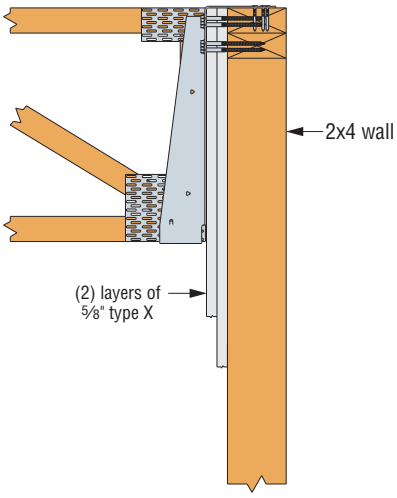

Typical Installation over
(2) Layers of Drywall

C-C-2021 ©2021 SIMPSON STRONG-TIE COMPANY INC.

WMU

GFCMU Top-Flange Hanger

The WMU is designed for use on standard 8"-grout-filled masonry block wall construction (GFCMU).

Material: 12-gauge top flange and stirrup

Finish: Simpson Strong-Tie gray paint; hot-dip galvanized available: specify HDG

Installation:

- Use all specified fasteners; see General Notes.
- Minimum f'_m is 1,500 psi.
- End vertical must be minimum double 2x.
- **Mid-Wall Installation:**
  Installed between blocks with two 0.162" x 3½" duplex nails cast into grout with a minimum of one grouted course above and below the top flange and one #5 vertical rebar minimum 24" long in each adjacent cell.
- **Top-of-Wall Installation:**
  For hanger heights exceeding the joist height, the allowable load is 0.50 of the table load. Refer to technical bulletin T-C-SLOPEJST at **strongtie.com** for information regarding load reductions on selected hangers which can be used without modification to support joists which have shallow slopes (¾:12).

Options:

- WMU may be sloped upward or downward up to 45°. The allowable download is 0.60 of the table load. There is no reduction for uplift.
- WMU may be skewed up to 45°. The allowable download is 0.60 of the table load. The allowable uplift is 0.25 of the table load.
- WMU may have the top flange offset left or right for placement in corners. The allowable download is 0.50 of the table load. The allowable uplift is 0.40 of the table load.

Codes: See p. 11 for Code Reference Key Chart

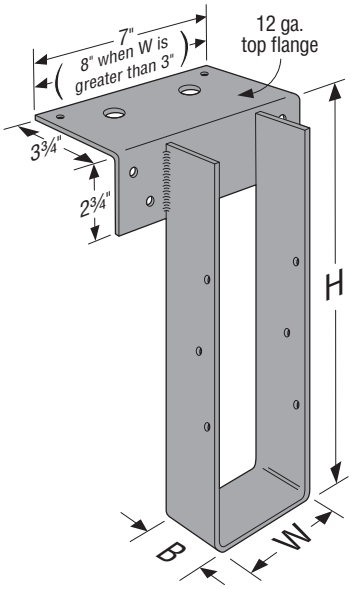

WMU

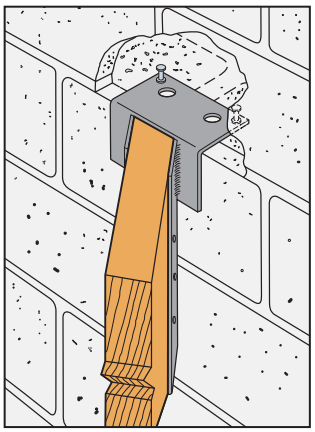

Typical WMU Sloped Down, Skewed Right Mid-Wall Installation

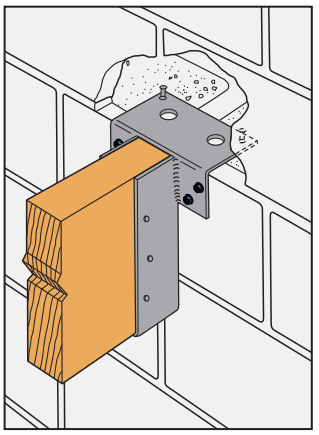

WMU Mid-Wall Installation

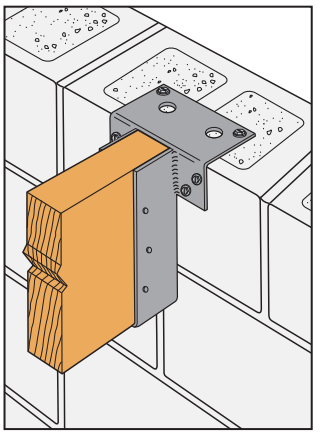

WMU Top-of-Wall Installation

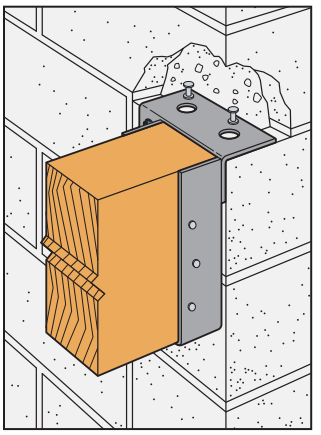

Typical WMU Top Flange Offset Left

C-C-2021 ©2021 SIMPSON STRONG-TIE COMPANY INC.

GFCMU Top-Flange Hanger (cont.)

Model Sizes

Joist Size	WMU Model	B (in.)	W (in.)	H (in.)
				5⅜ to 28
2x	WMU1.56X	5	1 9/16	Specify
1-ply truss	WMU1.62X	5	1⅝	Specify
1¾ LVL	WMU1.81X	4	1 13/16	Specify
2" I-joist	WMU2.06X	4	2 1/16	Specify
2 1/16" I-joist	WMU2.1X	4	2⅛	Specify
2¼" I-joist	WMU2.31X	4	2 5/16	Specify
2 5/16" I-joist	WMU2.37X	3	2⅜	Specify
3x	WMU2.56X	3	2 9/16	Specify
2 11/16" SCL	WMU2.75X	3	2¾	Specify
Double 2x	WMU3.12X	3	3⅛	Specify
3⅛" glulam	WMU3.25X	3	3¼	Specify
4x	WMU3.56X	3	3 9/16	Specify
4x2 truss	WMU3.62X	3	3⅝	Specify
3x6	WMU36X	3	2 9/16	Specify
3x8	WMU38X	3	2 9/16	Specify
Double 2" I-joist	WMU4.06X	3	4 1/16	Specify
Double 2 5/16" I-joist	WMU4.75X	3	4¾	Specify
4x6	WMU46X	3	3 9/16	Specify
4x8	WMU48X	3	3 9/16	Specify
Double 3x	WMU5.12X	3	5⅛	Specify
5⅛" glulam	WMU5.25X	3	5¼	Specify
5¼" SCL	WMU5.31X	3	5 5/16	Specify
6x	WMU5.50X	3	5½	Specify
6¾" glulam	WMU6.88X	3	6⅞	Specify
6x10	WMU610X	3	5½	Specify
6x12	WMU612X	3	5½	Specify
6x14	WMU614X	3	5½	Specify
6x16	WMU616X	3	5½	Specify
6x6	WMU66X	3	5½	Specify
6x8	WMU68X	3	5½	Specify
Double 3½"	WMU7.12X	3	7⅛	Specify
8x, Double 4x2 truss	WMU7.50X	3	7½	Specify

Model	Installation	Top Fasteners (in.)	Face Fasteners Titen Turbo™ (in.)	Joist Fasteners (in.)	GFCMU Allowable Loads										Code Ref.
					DF/SP					SPF/HF					
					Uplift (160)	Download				Uplift (160)	Download				
						(100)	(115)	(125)	(160)		(100)	(115)	(125)	(160)	
WMU	Mid-Wall	(2) 0.162 x 3½ duplex	(4) ¼ x 1¾	(6) 0.148 x 1½	920	4,895	4,990	5,050	5,270	690	3,655	3,740	3,790	3,985	—
	Top-of-Wall	(2) ¼ x 1¾ Titen Turbo			650	3,545	3,545	3,545	3,545	485	3,545	3,545	3,545	3,545	

1. Uplift loads have been increased for earthquake or wind loading with no further increase allowed. Reduce where other loads govern.
2. Grout-filled CMU (GFCMU) shall have a minimum compressive strength of f'_m = 1,500 psi.
3. See figures for top-of-wall and mid-wall installation.
4. Products shall be installed such that Titen Turbo screws are not exposed to exterior environments.
5. **Fasteners:** Nail dimensions are listed diameter by length. Titen Turbo screws are Simpson Strong-Tie concrete and masonry screws (hex-head model required). See pp. 21–22 for fastener information.

C-C-2021 ©2021 SIMPSON STRONG-TIE COMPANY INC.

GH

Girder Top-Flange Hanger

A girder-to-foundation wall connection.

Material: 12 gauge

Finish: Simpson Strong-Tie gray paint, hot-dip galvanized, specify HDG; see Corrosion Information, pp. 12–15

Installation:

- Use all specified fasteners; see General Notes.
- Insert four 0.162" x 3½" nails into girder.
- H = girder height – mudsill thickness. Measurement is from the bottom of the top flange to the top of the seat.
- 1½" clearance hole accommodates rebar or anchor. This is not required.

Options:

- GH hangers may be skewed to a maximum of 45°; bevel cut required. The allowable loads are 100% of the table load.
- Specify GHD for saddle-style hangers. GHD may not be skewed.

Codes: See p. 11 for Code Reference Key Chart

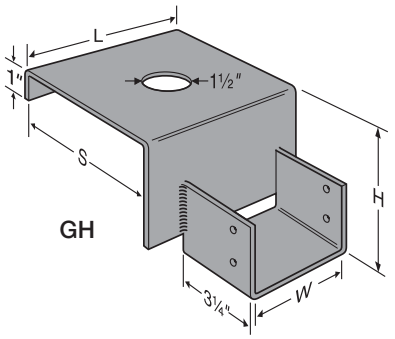

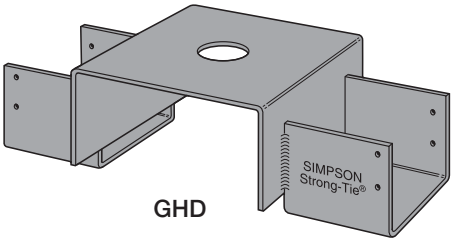

These products are available with additional corrosion protection. For more information, see p. 14.

Model No.	Girder	Dimensions (in.)					Fasteners (in.)	Allowable Downloads	Code Ref.
		W	L	H (2x Plate)	H (3x Plate)	S			
GH46-6	4x6	3 9/16	6	3 7/8	2 7/8	6 1/16	(4) 0.162 x 3½	4,650	IBC, FL, LA
GH46-8	4x6	3 9/16	6	3 7/8	2 7/8	8 1/16	(4) 0.162 x 3½	4,650	
GH48-6	4x8	3 9/16	6	5 5/8	4 5/8	6 1/16	(4) 0.162 x 3½	4,650	
GH48-8	4x8	3 9/16	6	5 5/8	4 5/8	8 1/16	(4) 0.162 x 3½	4,650	
GH410-6	4x10	3 9/16	6	7 5/8	6 5/8	6 1/16	(4) 0.162 x 3½	4,650	
GH410-8	4x10	3 9/16	6	7 5/8	6 5/8	8 1/16	(4) 0.162 x 3½	4,650	
GH66-6	6x6	5½	8	3 7/8	2 7/8	6 1/16	(4) 0.162 x 3½	4,650	
GH66-8	6x6	5½	8	3 7/8	2 7/8	8 1/16	(4) 0.162 x 3½	4,650	
GH68-6	6x8	5½	8	5 7/8	4 5/8	6 1/16	(4) 0.162 x 3½	4,650	
GH68-8	6x8	5½	8	5 7/8	4 5/8	8 1/16	(4) 0.162 x 3½	4,650	
GH610-6	6x10	5½	8	7 7/8	6 7/8	6 1/16	(4) 0.162 x 3½	4,650	
GH610-8	6x10	5½	8	7 7/8	6 7/8	8 1/16	(4) 0.162 x 3½	4,650	

1. Loads may not be increased for duration of load.
2. A mudsill on top of the GH is required to achieve the table loads.
3. Models listed are for a 2x plate; specify "H" dimension when ordering for use with a 3x plate.
4. Uplift loads do not apply for this connector.
5. **Fasteners:** Nail dimensions are listed diameter by length. See pp. 21–22 for fastener information.

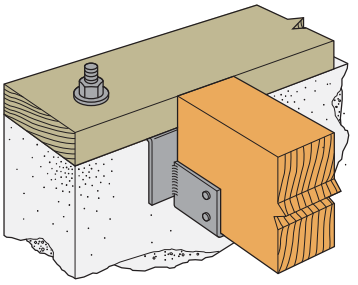

Typical GH Installation

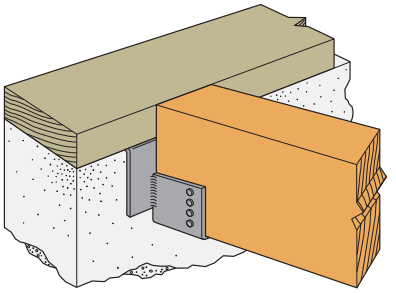

Typical GH Installation Skewed Right

C-C-2021 ©2021 SIMPSON STRONG-TIE COMPANY INC.

HU/HUC

Heavy-Duty Face-Mount Hangers

HU/HUC hangers may be installed on a masonry/concrete wall as described below. Additionally, HU hangers with one flange concealed may be installed similarly.

HU and HUC products are heavy-duty face-mount joist hangers made from 14-gauge galvanized steel.

- The HUC is a concealed flange (face flanges turned in) version of the HU.
- HU is available with both flanges concealed, provided the W dimension is 2 5/16" or greater, at 100% of the table load. Specify HUC.
- HU is available with one flange concealed when the W dimension is less than 2 5/16" at 100% of the table load. Specify as an 'X' version and specify flange to conceal.
- For any HU or HUC shown in this catalog, the user may substitute all face nails with ¼" x 1¾" Titen Turbo™ screws (Model TNT25134H) for concrete and ¼" x 2¾" Titen Turbo screws (Model TNT25234H) for GFCMU. Follow all installation instructions and use the loads from the sawn lumber or EWP sections.

Material: 14 gauge

Finish: Galvanized; ZMAX® and stainless steel available

Installation:

- Attach the hangers to concrete or GFCMU walls using hex-head Titen Turbo screws. Titen Turbo screw anchors for GFCMU (¼" x 2¾" — Model TNT25234H) and for concrete (¼" x 1¾" — Model TNT25134H) are not provided with the hangers.
- Drill and prep the holes according to the Installation Instructions provided with the packaging for Titen Turbo screw anchors.
- Caution: Oversized-diameter holes in the base material will reduce or eliminate the mechanical interlock of the threads with the base material and will reduce the anchor's load capacity.
- Titen Turbo Installation Kits are available (Model TNTINSTALLKIT). A 3/16" x 6" SDS-plus drill bit is also available (Model MDPL01860SH).
- **Installation on GFCMU** — A minimum edge distance of 1½" and a minimum end distance of 3⅞" is required as shown in Figure 1 for full load. Where no uplift is required, a minimum end distance of 1½" is permitted.
- **Installation on Concrete** — A minimum end and edge distance of 3" is required for table loads. For edge distances of 1¾" minimum and a minimum end distance of 3", allowable download is 0.90 of table loads with no reduction for uplift loads.

Codes: See p. 11 for Code Reference Key Chart

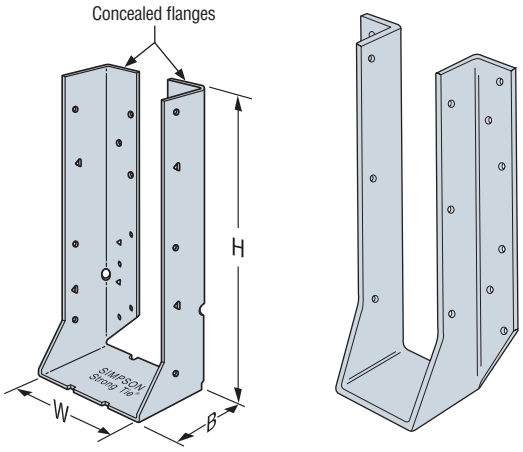

HUC HU214

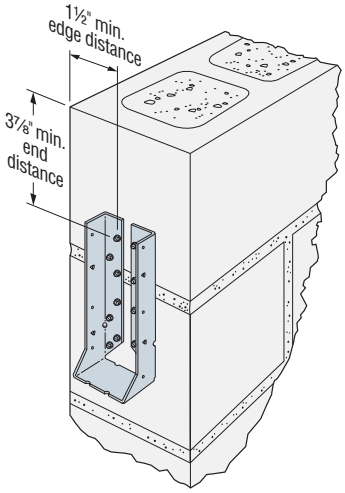

Figure 1 — HUC410 Installed on Masonry Block End Wall

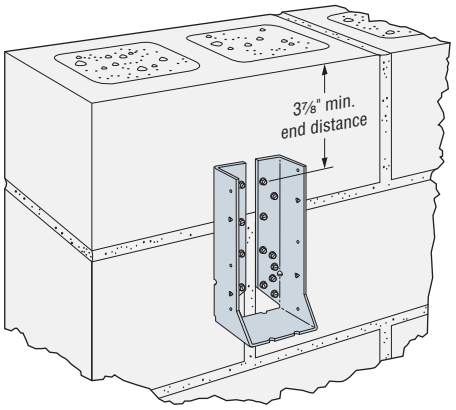

Figure 2 — HUC410 Installed on Masonry Block End Wall

C-C-2021 ©2021 SIMPSON STRONG-TIE COMPANY INC.

SIMPSON Strong-Tie®

Heavy-Duty Face-Mount Hangers (cont.)

These products are available with additional corrosion protection. For more information, see p. 14.

Model No.		Fasteners (in.)			Allowable Loads (DF/SP)				Code Ref.
					GFCMU		Concrete		
Standard	Concealed	GFCMU Titen Turbo™	Concrete Titen Turbo	Joist	Uplift (160)	Down (100/125)	Uplift (160)	Down (100/125)	
HU26	HU26X	(4) ¼ x 2¾	(4) ¼ x 1¾	(2) 0.148 x 1½	335	1,000	335	1,240	
HU28	HU28X	(6) ¼ x 2¾	(6) ¼ x 1¾	(4) 0.148 x 1½	545	1,500	760	1,860	
HU24-2	HUC24-2	(4) ¼ x 2¾	(4) ¼ x 1¾	(2) 0.148 x 3	380	1,000	380	1,240	
HU26-2 (Min.)	HUC26-2	(8) ¼ x 2¾	(8) ¼ x 1¾	(4) 0.148 x 3	760	2,000	760	2,480	
HU26-2 (Max.)	HUC26-2	(12) ¼ x 2¾	(12) ¼ x 1¾	(6) 0.148 x 3	1,135	3,000	1,135	3,720	
HU26-3 (Min.)	HUC26-3 (Min.)	(8) ¼ x 2¾	(8) ¼ x 1¾	(4) 0.148 x 3	760	2,000	760	2,480	
HU26-3 (Max.)	HUC26-3 (Max.)	(12) ¼ x 2¾	(12) ¼ x 1¾	(6) 0.148 x 3	1,135	3,000	1,135	3,720	
HU28-2 (Min.)	HUC28-2 (Min.)	(10) ¼ x 2¾	(10) ¼ x 1¾	(4) 0.148 x 3	760	2,500	760	3,100	
HU28-2 (Max.)	HUC28-2 (Max.)	(14) ¼ x 2¾	(14) ¼ x 1¾	(6) 0.148 x 3	1,135	3,500	1,135	4,340	
HU210	HU210X	(8) ¼ x 2¾	(8) ¼ x 1¾	(4) 0.148 x 1½	545	2,000	760	2,415	
HU210-2 (Min.)	HUC210-2 (Min.)	(14) ¼ x 2¾	(14) ¼ x 1¾	(6) 0.148 x 3	1,135	3,500	1,135	4,340	
HU210-2 (Max.)	HUC210-2 (Max.)	(18) ¼ x 2¾	(18) ¼ x 1¾	(10) 0.148 x 3	1,800	4,500	1,800	5,085	
HU210-3 (Min.)	HUC210-3 (Min.)	(14) ¼ x 2¾	(14) ¼ x 1¾	(6) 0.148 x 3	1,135	3,500	1,135	4,340	
HU210-3 (Max.)	HUC210-3 (Max.)	(18) ¼ x 2¾	(18) ¼ x 1¾	(10) 0.148 x 3	1,800	4,500	1,800	5,085	
HU212	HU212X	(10) ¼ x 2¾	(10) ¼ x 1¾	(6) 0.148 x 1½	1,135	2,500	1,135	2,665	
HU212-2 (Min.)	HUC212-2 (Min.)	(16) ¼ x 2¾	(16) ¼ x 1¾	(6) 0.148 x 3	1,135	4,000	1,135	4,920	
HU212-2 (Max.)	HUC212-2 (Max.)	(22) ¼ x 2¾	(22) ¼ x 1¾	(10) 0.148 x 3	1,350	5,085	1,350	5,085	
HU212-3 (Min.)	HUC212-3 (Min.)	(16) ¼ x 2¾	(16) ¼ x 1¾	(6) 0.148 x 3	1,135	4,000	1,135	4,920	
HU212-3 (Max.)	HUC212-3 (Max.)	(22) ¼ x 2¾	(22) ¼ x 1¾	(10) 0.148 x 3	1,800	5,085	1,800	5,085	
HU214	HU214X	(12) ¼ x 2¾	(12) ¼ x 1¾	(6) 0.148 x 1½	1,135	2,665	1,135	2,665	
HU214-2 (Min.)	HUC214-2 (Min.)	(18) ¼ x 2¾	(18) ¼ x 1¾	(8) 0.148 x 3	1,515	4,500	1,515	5,085	
HU214-2 (Max.)	HUC214-2 (Max.)	(24) ¼ x 2¾	(24) ¼ x 1¾	(12) 0.148 x 3	2,015	5,085	2,015	5,085	
HU214-3 (Min.)	HUC214-3 (Min.)	(18) ¼ x 2¾	(18) ¼ x 1¾	(8) 0.148 x 3	1,515	4,500	1,515	5,085	—
HU214-3 (Max.)	HUC214-3 (Max.)	(24) ¼ x 2¾	(24) ¼ x 1¾	(12) 0.148 x 3	2,015	5,085	2,015	5,085	
HU216	HU216X	(18) ¼ x 2¾	(18) ¼ x 1¾	(8) 0.148 x 1½	1,515	2,920	1,515	2,920	
HU216-2 (Min.)	HUC216-2 (Min.)	(20) ¼ x 2¾	(20) ¼ x 1¾	(8) 0.148 x 3	1,515	4,920	1,515	4,920	
HU216-2 (Max.)	HUC216-2 (Max.)	(26) ¼ x 2¾	(26) ¼ x 1¾	(12) 0.148 x 3	2,015	5,085	2,015	5,085	
HU216-3 (Min.)	HUC216-3 (Min.)	(20) ¼ x 2¾	(20) ¼ x 1¾	(8) 0.148 x 3	1,515	4,920	1,515	4,920	
HU216-3 (Max.)	HUC216-3 (Max.)	(26) ¼ x 2¾	(26) ¼ x 1¾	(12) 0.148 x 3	2,015	5,085	2,015	5,085	
HU7 (Min.)	(Not available)	(12) ¼ x 2¾	(12) ¼ x 1¾	(4) 0.148 x 1½	545	2,980	760	2,980	
HU7 (Max.)	(Not available)	(16) ¼ x 2¾	(16) ¼ x 1¾	(8) 0.148 x 1½	1,085	3,485	1,085	3,485	
HU9 (Min.)	(Not available)	(18) ¼ x 2¾	(18) ¼ x 1¾	(6) 0.148 x 1½	1,135	3,230	1,135	3,230	
HU9 (Max.)	(Not available)	(24) ¼ x 2¾	(24) ¼ x 1¾	(10) 0.148 x 1½	1,445	3,735	1,445	3,735	
HU11 (Min.)	(Not available)	(22) ¼ x 2¾	(22) ¼ x 1¾	(6) 0.148 x 1½	1,135	3,230	1,135	3,230	
HU11 (Max.)	(Not available)	(30) ¼ x 2¾	(30) ¼ x 1¾	(10) 0.148 x 1½	1,445	3,735	1,445	3,735	
HU14 (Min.)	(Not available)	(28) ¼ x 2¾	(28) ¼ x 1¾	(8) 0.148 x 1½	1,515	3,485	1,515	3,485	
HU14 (Max.)	(Not available)	(36) ¼ x 2¾	(36) ¼ x 1¾	(14) 0.148 x 1½	2,015	4,245	2,015	4,245	
HU3.25/10.5	(Not available)	(22) ¼ x 2¾	(22) ¼ x 1¾	(10) 0.148 x 3	1,895	5,085	1,895	5,085	
HU3.25/12	(Not available)	(24) ¼ x 2¾	(24) ¼ x 1¾	(12) 0.148 x 3	2,015	5,085	2,015	5,085	
HU3.25/16 (Min.)	(Not available)	(20) ¼ x 2¾	(20) ¼ x 1¾	(8) 0.148 x 3	1,515	4,920	1,515	4,920	
HU3.25/16 (Max.)	(Not available)	(26) ¼ x 2¾	(26) ¼ x 1¾	(12) 0.148 x 3	2,015	5,085	2,015	5,085	
HU44	HUC44	(4) ¼ x 2¾	(4) ¼ x 1¾	(2) 0.148 x 3	380	1,000	380	1,240	
HU46 (Min.)	HUC46 (Min.)	(8) ¼ x 2¾	(8) ¼ x 1¾	(4) 0.148 x 3	760	2,000	760	2,480	
HU46 (Max.)	HUC46 (Max.)	(12) ¼ x 2¾	(12) ¼ x 1¾	(6) 0.148 x 3	1,135	3,000	1,135	3,720	

See footnotes on p. 245.

C-C-2021 ©2021 SIMPSON STRONG-TIE COMPANY INC.

Heavy-Duty Face-Mount Hangers (cont.)

These products are available with additional corrosion protection. For more information, see p. 14.

Model No.		Fasteners (in.)			Allowable Loads (DF/SP)				Code Ref.
					GFCMU		Concrete		
Standard	Concealed	GFCMU Titen Turbo™	Concrete Titen Turbo	Joist	Uplift (160)	Down (100/125)	Uplift (160)	Down (100/125)	
HU48 (Min.)	HUC48 (Min.)	(10) ¼ x 2¾	(10) ¼ x 1¾	(4) 0.148 x 3	760	2,500	760	3,100	—
HU48 (Max.)	HUC48 (Max.)	(14) ¼ x 2¾	(14) ¼ x 1¾	(6) 0.148 x 3	1,135	3,500	1,135	4,340	
HU410 (Min.)	HUC410 (Min.)	(14) ¼ x 2¾	(14) ¼ x 1¾	(6) 0.148 x 3	1,135	3,500	1,135	4,340	
HU410 (Max.)	HUC410 (Max.)	(18) ¼ x 2¾	(18) ¼ x 1¾	(10) 0.148 x 3	1,800	4,500	1,800	4,920	
HU412 (Min.)	HUC412 (Min.)	(16) ¼ x 2¾	(16) ¼ x 1¾	(6) 0.148 x 3	1,135	4,000	1,135	4,920	
HU412 (Max.)	HUC412 (Max.)	(22) ¼ x 2¾	(22) ¼ x 1¾	(10) 0.148 x 3	1,800	5,085	1,800	5,085	
HU414 (Min.)	HUC414 (Min.)	(18) ¼ x 2¾	(18) ¼ x 1¾	(8) 0.148 x 3	1,515	4,500	1,515	5,085	
HU414 (Max.)	HUC414 (Max.)	(24) ¼ x 2¾	(24) ¼ x 1¾	(12) 0.148 x 3	2,015	5,085	2,015	5,085	
HU416 (Min.)	HUC416 (Min.)	(20) ¼ x 2¾	(20) ¼ x 1¾	(8) 0.148 x 3	1,515	4,920	1,515	4,920	
HU416 (Max.)	HUC416 (Max.)	(26) ¼ x 2¾	(26) ¼ x 1¾	(12) 0.148 x 3	2,015	5,085	2,015	5,085	
HU66 (Min.)	HUC66 (Min.)	(8) ¼ x 2¾	(8) ¼ x 1¾	(4) 0.162 x 3½	900	2,000	900	2,480	
HU66 (Max.)	HUC66 (Max.)	(12) ¼ x 2¾	(12) ¼ x 1¾	(6) 0.162 x 3½	1,345	3,000	1,345	3,720	
HU68 (Min.)	HUC68 (Min.)	(10) ¼ x 2¾	(10) ¼ x 1¾	(4) 0.162 x 3½	900	2,500	900	3,100	
HU68 (Max.)	HUC68 (Max.)	(14) ¼ x 2¾	(14) ¼ x 1¾	(6) 0.162 x 3½	1,345	3,500	1,345	4,340	
HU610 (Min.)	HUC610 (Min.)	(14) ¼ x 2¾	(14) ¼ x 1¾	(6) 0.162 x 3½	1,345	3,500	1,345	4,340	
HU610 (Max.)	HUC610 (Max.)	(18) ¼ x 2¾	(18) ¼ x 1¾	(8) 0.162 x 3½	1,795	4,500	1,795	5,085	
HU612 (Min.)	HUC612 (Min.)	(16) ¼ x 2¾	(16) ¼ x 1¾	(6) 0.162 x 3½	1,345	4,000	1,345	4,920	
HU612 (Max.)	HUC612 (Max.)	(22) ¼ x 2¾	(22) ¼ x 1¾	(8) 0.162 x 3½	1,795	4,920	1,795	4,920	
HU614 (Min.)	HUC614 (Min.)	(18) ¼ x 2¾	(18) ¼ x 1¾	(8) 0.162 x 3½	1,795	4,500	1,795	5,085	
HU614 (Max.)	HUC614 (Max.)	(24) ¼ x 2¾	(24) ¼ x 1¾	(12) 0.162 x 3½	2,015	5,085	2,015	5,085	
HU616 (Min.)	HUC616 (Min.)	(20) ¼ x 2¾	(20) ¼ x 1¾	(8) 0.162 x 3½	1,795	4,920	1,795	4,920	
HU616 (Max.)	HUC616 (Max.)	(26) ¼ x 2¾	(26) ¼ x 1¾	(12) 0.162 x 3½	2,015	5,085	2,015	5,085	
HU410-2 (Min.)	HUC410-2 (Min.)	(14) ¼ x 2¾	(14) ¼ x 1¾	(6) 0.162 x 3½	1,345	3,500	1,345	4,340	
HU410-2 (Max.)	HUC410-2 (Max.)	(18) ¼ x 2¾	(18) ¼ x 1¾	(8) 0.162 x 3½	1,795	4,500	1,795	5,085	
HU412-2 (Min.)	HUC412-2 (Min.)	(16) ¼ x 2¾	(16) ¼ x 1¾	(6) 0.162 x 3½	1,345	4,000	1,345	4,920	
HU412-2 (Max.)	HUC412-2 (Max.)	(22) ¼ x 2¾	(22) ¼ x 1¾	(10) 0.162 x 3½	1,800	4,920	1,800	4,920	
HU414-2 (Min.)	HUC414-2 (Min.)	(20) ¼ x 2¾	(20) ¼ x 1¾	(8) 0.162 x 3½	1,795	4,920	1,795	4,920	
HU414-2 (Max.)	HUC414-2 (Max.)	(26) ¼ x 2¾	(26) ¼ x 1¾	(12) 0.162 x 3½	2,015	5,085	2,015	5,085	
HU88 (Min.)	HUC88 (Min.)	(10) ¼ x 2¾	(10) ¼ x 1¾	(4) 0.162 x 3½	900	2,500	900	3,100	
HU88 (Max.)	HUC88 (Max.)	(14) ¼ x 2¾	(14) ¼ x 1¾	(6) 0.162 x 3½	1,345	3,500	1,345	4,340	
HU810 (Min.)	HUC810 (Min.)	(14) ¼ x 2¾	(14) ¼ x 1¾	(6) 0.162 x 3½	1,345	3,500	1,345	4,340	
HU810 (Max.)	HUC810 (Max.)	(18) ¼ x 2¾	(18) ¼ x 1¾	(8) 0.162 x 3½	1,795	4,500	1,795	5,085	
HU812 (Min.)	HUC812 (Min.)	(16) ¼ x 2¾	(16) ¼ x 1¾	(6) 0.162 x 3½	1,345	4,000	1,345	4,920	
HU812 (Max.)	HUC812 (Max.)	(22) ¼ x 2¾	(22) ¼ x 1¾	(10) 0.162 x 3½	1,800	4,920	1,800	4,920	
HU814 (Min.)	HUC814 (Min.)	(18) ¼ x 2¾	(18) ¼ x 1¾	(8) 0.162 x 3½	1,795	4,500	1,795	5,085	
HU814 (Max.)	HUC814 (Max.)	(24) ¼ x 2¾	(24) ¼ x 1¾	(12) 0.162 x 3½	2,015	5,085	2,015	5,085	
HU816 (Min.)	HUC816 (Min.)	(20) ¼ x 2¾	(20) ¼ x 1¾	(8) 0.162 x 3½	1,795	4,920	1,795	4,920	
HU816 (Max.)	HUC816 (Max.)	(26) ¼ x 2¾	(26) ¼ x 1¾	(12) 0.162 x 3½	2,015	5,085	2,015	5,085	

1. Uplift loads have been increased for earthquake or wind loading with no further increase allowed. Reduce where other loads govern.
2. Concrete shall have a minimum compressive strength of f'_c = 2,500 psi.
3. Grout-filled CMU (GFCMU) shall have a minimum compressive strength of f'_m = 1,500 psi.
4. When only one flange is concealed, specify whether the right or the left is the concealed flange.
5. Products shall be installed such that Titen Turbo screws are not exposed to the weather.
6. **Fasteners:** Nail dimensions are listed diameter by length. Titen Turbo screws are Simpson Strong-Tie concrete and masonry screws (hex-head model required). See pp. 21–22 for fastener information.

C-C-2021 ©2021 SIMPSON STRONG-TIE COMPANY INC.

LGUM/HGUM

Heavy-Duty Face-Mount Beam/Girder Hangers for Concrete and GFCMU

High-capacity beam or girder hangers for concrete or masonry applications. Installation is made easier using Strong-Drive® SDS Heavy-Duty Connector screws (provided) into the wood member and Titen HD® anchors (provided) into the masonry.

Material: See table

Finish: Galvanized

Installation:

- Use all specified fasteners (included).
- Attach hanger to a concrete or grout-filled CMU wall using Titen HD anchors. Note the following:
  - Drill holes using drill bits equal in diameter to the specified Titen HD anchor.
  - Holes shall be drilled ½" deeper than the specified Titen HD length (i.e. 4½" for a 4" long Titen HD anchor)
  - Caution: Oversized holes in the base material will reduce or eliminate the mechanical interlock of the threads with the base material and will reduce the anchor's load capacity.
- Carbon-steel Titen HD is not recommended for exposed exterior applications.
- Provide moisture barrier between beam and wall per jurisdictional requirements.

Options:

- For HGUM only — other seat widths and hanger heights available. Order as "X" version.
- HGUM available with one flange concealed. See p. 248 for reduced load at end of wall and outside corner.
- LGUM/HGUM available in skews up to 45°. See Hanger Options, p. 248.
- For stainless-steel options, see Simpson Strong-Tie engineering letter L-C-CMUHGRSS at **strongtie.com**.

Codes: See p. 11 for Code Reference Key Chart

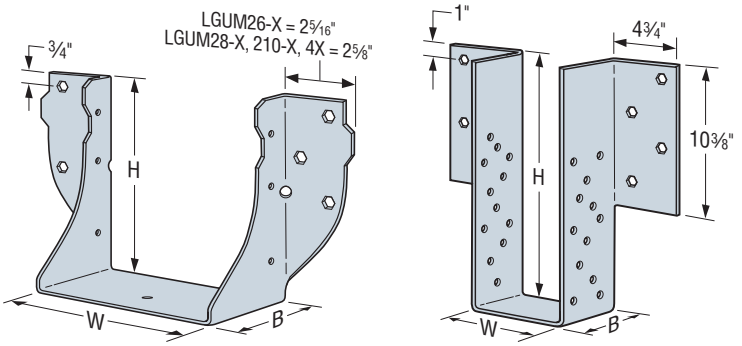

LGUM HGUM

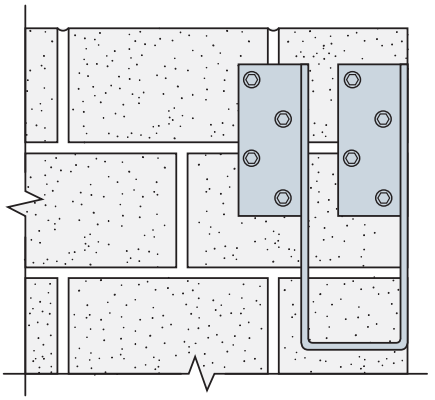

HGUM with Right Flange Concealed
(see p. 248 for reduction factors)

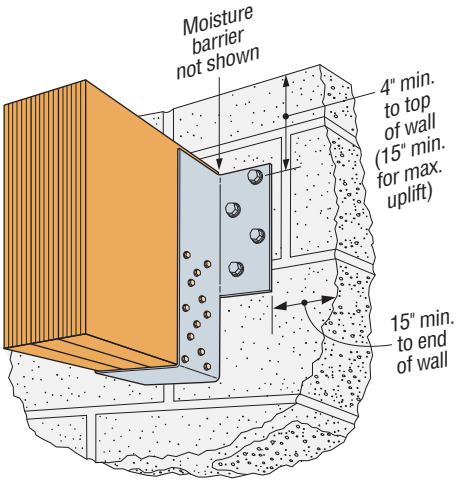

Typical HGUM Installation

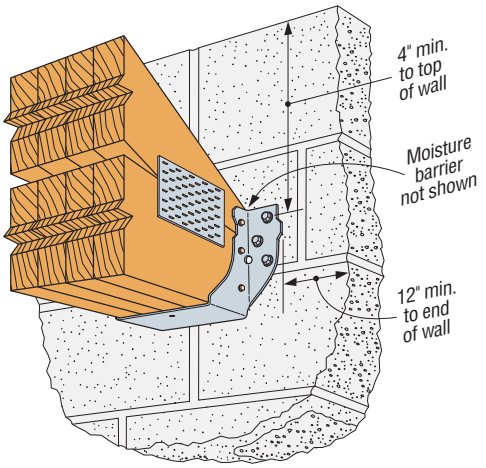

Typical LGUM Installation

C-C-2021 ©2021 SIMPSON STRONG-TIE COMPANY INC.

LGUM/HGUM

Heavy-Duty Face-Mount Beam/Girder Hangers for Concrete and GFCMU (cont.)

These products are available with additional corrosion protection. For more information, see p. 14.

SS For stainless-steel fasteners, see p. 21.

	Model No.	Ga.	Dimensions (in.)			Fasteners (in.)		Allowable Loads (DF, SP, LVL, PSL, LSL)				Code Ref.
			W	H	B	GFCMU and Concrete	Joist	Uplift (160)		Download (100/115/125)		
						Titen HD® Anchors	Strong-Drive® SDS Screws	GFCMU	Concrete	GFCMU	Concrete	
	Double 2x Sizes											FL
SS	LGUM26-2-SDS	12	3 5/16	5 7/16	4	(4) 3/8 x 4	(4) 1/4 x 2 1/2	1,430	1,430	5,595		
SS	LGUM28-2-SDS	12	3 5/16	7 3/16	4	(6) 3/8 x 4	(6) 1/4 x 2 1/2	2,435	2,435	8,250		
SS	LGUM210-2-SDS	12	3 5/16	9 3/16	4	(8) 3/8 x 4	(8) 1/4 x 2 1/2	3,575	3,575	9,575		
	Triple 2x Sizes											
SS	LGUM26-3-SDS	12	4 15/16	5 1/2	4	(4) 3/8 x 4	(4) 1/4 x 2 1/2	1,430	1,430	5,610		
SS	LGUM28-3-SDS	12	4 15/16	7 1/4	4	(6) 3/8 x 4	(6) 1/4 x 2 1/2	2,435	2,435	8,290		
SS	LGUM210-3-SDS	12	4 15/16	9 1/4	4	(8) 3/8 x 4	(8) 1/4 x 2 1/2	3,575	3,575	9,715		
	Quadruple 2x Sizes											
SS	LGUM26-4-SDS	12	6 9/16	5 7/16	4	(4) 3/8 x 4	(4) 1/4 x 2 1/2	1,430	1,430	5,625		
SS	LGUM28-4-SDS	12	6 9/16	7 3/16	4	(6) 3/8 x 4	(6) 1/4 x 2 1/2	2,435	2,435	8,335		
SS	LGUM210-4-SDS	12	6 9/16	9 3/16	4	(8) 3/8 x 4	(8) 1/4 x 2 1/2	3,575	3,575	9,860		
	4x Sizes											
SS	LGUM46-SDS	12	3 5/8	4 7/8	4	(4) 3/8" x 4"	(4) 1/4" x 2 1/2"	1,430	1,430	5,600		
SS	LGUM48-SDS	12	3 5/8	6 7/8	4	(6) 3/8" x 4"	(6) 1/4" x 2 1/2"	2,435	2,435	8,260		
SS	LGUM410-SDS	12	3 5/8	8 7/8	4	(8) 3/8" x 4"	(8) 1/4" x 2 1/2"	3,575	3,575	9,620		
	Engineered Wood and Structural Composite Lumber Sizes (Heavy Duty)											
SS	HGUM5.25-SDS	7	5 1/4	11 to 30	5 1/4	(8) 5/8" x 5"	(24) 1/4" x 2 1/2"	4,105	5,075	14,025	14,770	
SS	HGUM5.50-SDS	7	5 1/2		5 1/4	(8) 5/8" x 5"	(24) 1/4" x 2 1/2"	4,105	5,075	14,000	14,915	
SS	HGUM7.00-SDS	7	7		5 1/4	(8) 5/8" x 5"	(24) 1/4" x 2 1/2"	4,105	5,075	13,840	14,915	
SS	HGUM7.25-SDS	7	7 1/4		5 1/4	(8) 5/8" x 5"	(24) 1/4" x 2 1/2"	4,105	5,075	13,810	14,915	
SS	HGUM9.00-SDS	7	9		5 1/4	(8) 5/8" x 5"	(24) 1/4" x 2 1/2"	4,105	5,075	13,625	14,915	

1. Uplift loads have been increased for earthquake or wind loading with no further increase allowed. Reduce where other loads govern.
2. Tabulated uplift loads are based on 4" minimum distance to top of wall. For HGUM installations with 15" minimum distance to top of wall, uplift loads are 6,180 lb. for GFCMU and 6,585 for concrete.
3. Concrete shall have a minimum compressive strength of f'_c = 2,500 psi.
4. Grout-filled CMU (GFCMU) shall have a minimum compressive strength of f'_m = 1,500 psi.
5. LGUM must be installed on minimum 6"-thick wall and HGUM on minimum 8"-thick wall. (Nominal values for GFCMU.)
6. Titen HD® anchors may be installed into the head or bed joints.
7. SDS screws may be installed through metal truss plates as approved by the Truss Designer, provided the requirements of ANSI/TPI 1-2014, Sections 7.5.3.4 and 8.9.2 are met (predrilling required through the plate using a 5/32" bit maximum).
8. For stainless-steel options, see Simpson Strong-Tie engineering letter L-C-CMUHGRSS at **strongtie.com**.
9. **Fasteners:** SDS screws are Simpson Strong-Tie® Strong-Drive SDS Heavy-Duty Connector screws. See pp. 21–22 for fastener information.

C-C-2021 ©2021 SIMPSON STRONG-TIE COMPANY INC.

Heavy-Duty Face-Mount Beam/Girder Hangers for Concrete and GFCMU (cont.)

These products are available with additional corrosion protection. For more information, see p. 14.

SS For stainless-steel fasteners, see p. 21.

Concealed Flange — Allowable Loads with One Flange Concealed

Model No.	W (in.)	H (in.)	Fasteners		End of Wall				Outside Corner	
			GFCMU and Concrete	Joist	GFCMU Wall DF/SP/SCL Beam		Concrete Wall DF/SP/SCL Beam		GFCMU and Concrete Wall DF/SP/SCL Beam	
			Titen HD® Anchors	SDS Screws	Uplift (160)	Download	Uplift (160)	Download	Uplift (160)	Download
SS HGUM	5¼ to 9	11 to 30	(8) ⅝" x 5"	(24) ¼" x 2½"	1,285	5,750	3,150	7,025	3,150	7,555

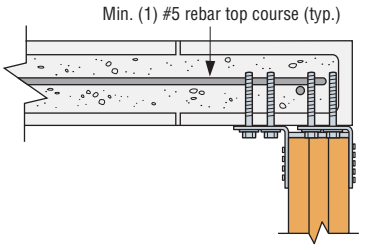

Typical Concealed Flange HGUM Installation at End of Wall

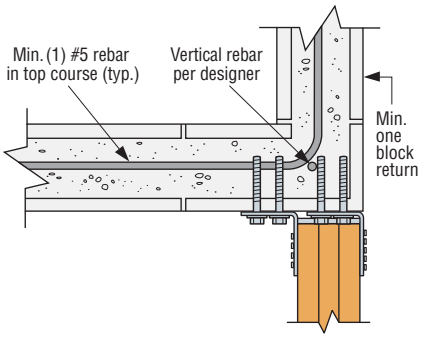

Typical Concealed Flange HGUM Right Installation at Outside Corner

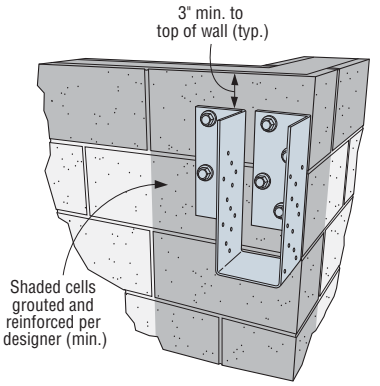

Typical Concealed Flange HGUM Installation at Outside Corner *(concealed right shown)*

LGUM/HGUM Allowable Loads for Skewed (L/R) Applications

Model No.	Fasteners		Allowable Loads GFCMU and Concrete	
	GFCMU and Concrete	Joist	(DF, SP, LVL, PSL, LSL)	
	Titen HD® Anchors	SDS Screws	Uplift (160)	Download (100/115/125)
SS LGUM26-2X	(4) ⅜" x 4"	(4) ¼" x 2½"	565	1,965
SS LGUM26-3X				
SS LGUM26-4X				
SS LGUM46X				
SS LGUM28-2X	(6) ⅜" x 4"	(6) ¼" x 2½"	1,085	3,080
SS LGUM28-3X				
SS LGUM28-4X				
SS LGUM48X				
SS LGUM210-2X	(8) ⅜" x 4"	(8) ¼" x 2½"	1,605	4,190
SS LGUM210-3X				
SS LGUM210-4X				
SS LGUM410X				
SS HGUM5.25X	(8) ⅝" x 5"	(8) ¼" x 2½"	1,430	6,455
SS HGUM5.50X				
SS HGUM7.00X	(8) ⅝" x 5"	(8) ¼" x 2½"	1,440	5,820
SS HGUM7.25X				
SS HGUM9.00X	(8) ⅝" x 5"	(8) ¼" x 2½"	1,445	5,185

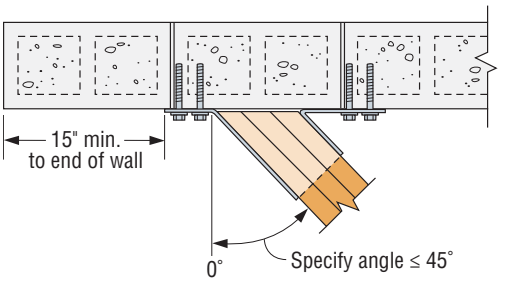

Top View HGUM Skewed Right Bevel Cut

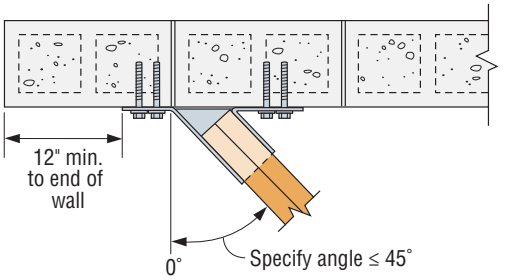

Top View LGUM Skewed Right Square Cut

C-C-2021 ©2021 SIMPSON STRONG-TIE COMPANY INC.

MBHA

Concrete and Masonry Top-Flange Hanger

The MBHA is a single-piece, non-welded connector available for solid sawn, truss and engineered wood products.

Material: 10 gauge

Finish: Galvanized

Installation:

- Use all specified fasteners; see General Notes

Options:

- Seat can be skewed at 45° only. The maximum allowable download is 3,495 lb. and 1,585 lb. uplift for height 7¼". For all other models, use the table listed download and uplift of 2,390 lb. Order MBHAR for skew right and MBHAL for skew left.

Codes: See p. 11 for Code Reference Key Chart

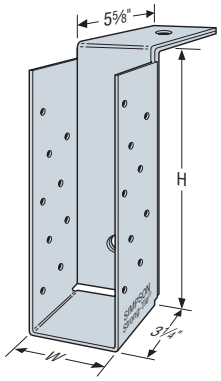

MBHA

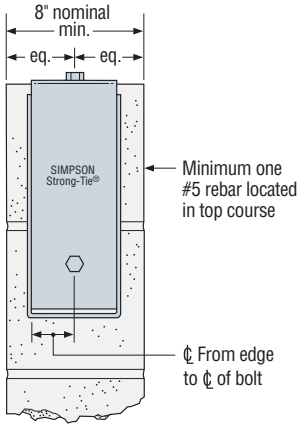

Typical MBHA Installation

Model No.	CL	Dimensions (in.)	
		W	H
MBHA3.12/9.25	1 9/16	3⅛	9¼
MBHA3.12/11.25	1 9/16	3⅛	11¼
MBHA3.56/7.25	1¾	3 9/16	7¼
MBHA3.56/9.25	1¾	3 9/16	9¼
MBHA3.56/11.25	1¾	3 9/16	11¼
MBHA3.56/11.88	1¾	3 9/16	11⅞
MBHA3.56/14	1¾	3 9/16	14
MBHA3.56/16	1¾	3 9/16	16
MBHA3.56/18	1¾	3 9/16	18
MBHA5.50/7.25	2¾	5½	7¼
MBHA5.50/9.25	2¾	5½	9¼
MBHA5.50/11.25	2¾	5½	11¼
MBHA5.50/11.88	2¾	5½	11⅞
MBHA5.50/14	2¾	5½	14
MBHA5.50/16	2¾	5½	16
MBHA5.50/18	2¾	5½	18

Model No.	Fasteners (in.)			Allowable Loads (DF/SP)				Code Ref.
				Concrete		GFCMU		
	Header		Joist					
	Top	Face		Uplift (160)	Download (100)	Uplift (160)	Download (100)	
MBHA	(1) ATR¾	(1) ATR¾	(18) 0.148 x 3	3,980	6,790	3,475	6,275	FL
MBHA models with H = 7¼"	(1) ATR¾	(1) ATR¾	(18) 0.148 x 3	1,885	4,380	1,885	4,380	

1. ATR is all-thread rod, grade A307 or better.
2. Concrete shall have a minimum compressive strength of f'_c = 2,500 psi.
3. Grout-filled CMU (GFCMU) shall have a minimum compressive strength of f'_m = 1,500 psi.
4. Uplift loads have been increased for earthquake or wind loading with no further increase allowed. Reduce where other loads govern.
5. Loads are based on installation using SET-3G™ or SET-XP® adhesive with 6¾" minimum embedment required. Refer to the Simpson Strong-Tie® *Anchoring, Fastening, Restoration and Strengthening Systems for Concrete and Masonry* catalog at **strongtie.com**.
6. MBHA hangers with height of 7¼" require a 3½" minimum embedment of the face bolt using SET-3G adhesive.
7. Alternative anchorage to be designed by others.
8. Table allowable loads were determined using the tested ultimate load with a safety factor of three or fastener calculation values.
9. **Fasteners:** Nail dimensions are listed diameter by length. See pp. 21–22 for fastener information.

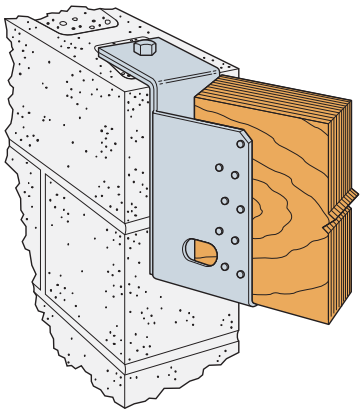

Typical MBHA Skewed Right Installation

C-C-2021 ©2021 SIMPSON STRONG-TIE COMPANY INC.

MBHU

Masonry Beam Face-Mount Hanger

The MBHU beam hanger provides a face-mounted solution for connecting beams to masonry or concrete walls. A non-welded, one-piece connector, the MBHU is suitable for solid sawn and engineered wood beams as well as trusses. Installation is simplified because the Titen HD® heavy-duty screw anchor and Strong-Drive® SDS Heavy-Duty Connector screws are included with the hanger. Since the Titen HD anchor is installed after the wall is built, locating the anchor in the right spot is easier than with cast-in-place bolts.

Material: 10 gauge

Finish: Galvanized. For stainless-steel options, see Simpson Strong-Tie engineering letter L-C-CMUHGRSS at **strongtie.com**.

Installation:

- Use all specified fasteners (included).
- Attach hanger to a concrete or grout-filled CMU wall using Titen HD anchors. Note the following:
  - Drill holes using drill bits equal in diameter to the specified Titen HD anchor.
  - Holes shall be drilled ½" deeper than the specified Titen HD length (i.e. 5½" for a 5" long Titen HD anchor).
  - Caution: Oversized holes in the base material will reduce or eliminate the mechanical interlock of the threads with the base material and will reduce the anchor's load capacity.
- Carbon-steel Titen HD is not recommended for exposed exterior applications.
- Provide moisture barrier between beam and wall per jurisdictional requirements.

Codes: See p. 11 for Code Reference Key Chart

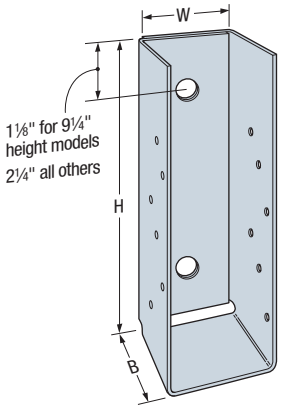

MBHU

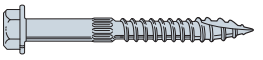

¼" x 2½" Strong-Drive® SDS Heavy-Duty Connector Screw

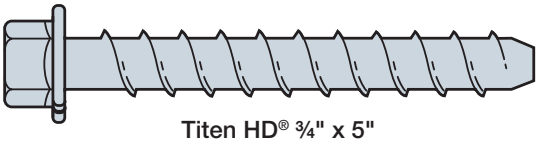

Titen HD® ¾" x 5" Screw Anchor

Model No.	Dimensions (in.)	
	Width (W)	Height (H)
MBHU3.56/9.25KT	3 9/16	9¼
MBHU3.56/11.25KT	3 9/16	11¼
MBHU3.56/11.88KT	3 9/16	11⅞
MBHU3.56/14KT	3 9/16	14
MBHU3.56/16KT	3 9/16	16
MBHU3.56/18KT	3 9/16	18
MBHU5.50/9.25KT	5½	9¼
MBHU5.50/11.25KT	5½	11¼
MBHU5.50/11.88KT	5½	11⅞
MBHU5.50/14KT	5½	14
MBHU5.50/16KT	5½	16
MBHU5.50/18KT	5½	18

1. Each MBHU hanger includes (2) ¾" x 5" Titen HD® anchors and (12) ¼" x 2½" Strong-Drive® SDS Heavy-Duty Connector screws.

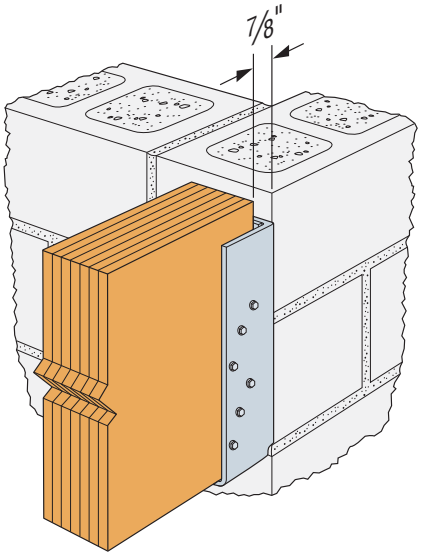

Typical MBHU Installation

C-C-2021 ©2021 SIMPSON STRONG-TIE COMPANY INC.

Masonry Beam Face-Mount Hanger (cont.)

These products are available with additional corrosion protection. For more information, see p. 14.

SS For stainless-steel fasteners, see p. 21.

	Series Model No.	Ga.	Dimensions (in.)			Fasteners		Allowable Loads End of Wall / Outside Corner DF/SP				Allowable Loads Away from Edge DF/SP		Code Ref.
			W	H	B	GFCMU and Concrete	Joist	GFCMU		Concrete		GFCMU and Concrete		
								Uplift	Download	Uplift	Download	Uplift	Download	
						Titen HD® Anchors	Strong-Drive SDS Screws	(160)	(100/ 115/125)	(160)	(100/ 115/125)	(160)	(100/ 115/125)	
SS	MBHU3.56	10	3⅝	9¼ to <14	3½	(2) ¾" x 5"	(12) ¼" x 2½"	1,610	2,440	2,715	4,190	2,210	4,005	FL
				14 to 18				1,610	2,440	2,715	4,190	3,345	6,065	
SS	MBHU5.50	10	5½	9¼ to <14	3½	(2) ¾" x 5"	(12) ¼" x 2½"	1,610	2,440	2,715	4,190	2,210	4,005	
				14 to 18				2,240	3,260[8]	3,485	6,970	3,345	6,065	

1. Uplift loads have been increased for earthquake or wind loading with no further increase allowed. Reduce where other loads govern.
2. Concrete shall have a minimum compressive strength of f'_c = 2,500 psi.
3. Grout-filled CMU (GFCMU) shall have a minimum compressive strength of f'_m = 1,500 psi.
4. Structural composite lumber (SCL) shall have a minimum specific gravity of 0.5.
5. Allowable loads only apply to installation on 8" nominal grouted CMU walls, with a minimum of one horizontal #5 rebar located in the top course.
6. Products shall be installed such that Titen HD® anchors are not exposed to exterior environments.
7. Allowable loads are based upon the tested ultimate load with a safety factor of 3.
8. Where noted in table, download listed is for end-of-wall condition. For outside-corner condition, download is 3,640 lb.
9. For stainless-steel options, see Simpson Strong-Tie® engineering letter L-C-CMUHGRSS at **strongtie.com**.
10. **Fasteners:** SDS screws are Simpson Strong-Tie Strong-Drive® SDS Heavy-Duty Connector screws. See pp. 21–22 for fastener information.

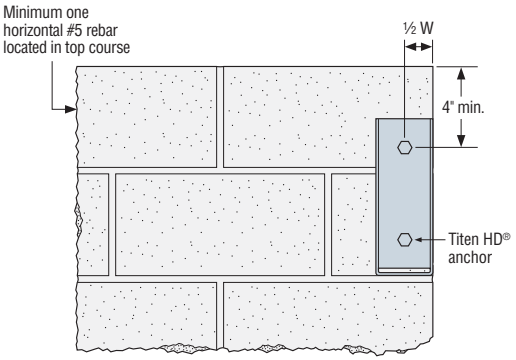

Installation at Outside Corner
(minimum load)

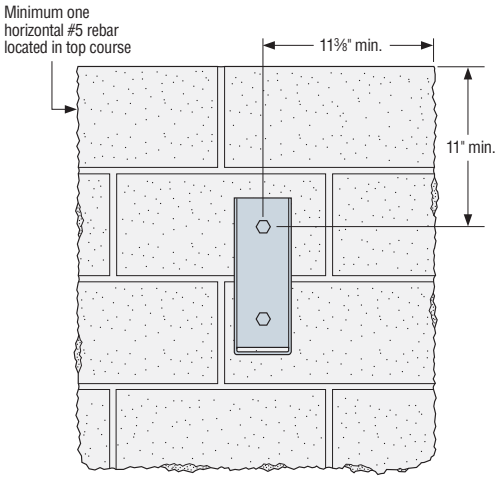

Installation Away from Edge of Wall
(maximum load)

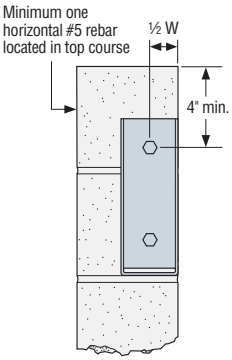

Installation on End of Wall
(minimum load)

C-C-2021 ©2021 SIMPSON STRONG-TIE COMPANY INC.

H/LTA2

Seismic and Hurricane Ties / Lateral Truss Anchor

The Hurricane Tie series features various configurations of wind and seismic ties for trusses and rafters.

The H10S provides a high-capacity connection from truss/rafter to wall. Also suitable for wood-to-wood applications (see pp. 276–278).

The HM9 is designed to retrofit roof truss/rafters for block construction. The HM9 hurricane tie provides high uplift and lateral capacity using Titen Turbo™ concrete and masonry screws.

The presloped 5/12 seat of the H16 provides for a tight fit and reduced deflection. The strap length provides for various truss heights up to a maximum of 13½". Minimum heel height for H16 series is 4".

The LTA2 is an embedded truss anchor for grout-filled CMU and concrete walls that develops high loads with shallow embedment. Designed for 2x4 minimum truss chords, the LTA2 resists uplift and lateral loads parallel and perpendicular to the wall with a minimum heel height requirement.

Material: H Ties — see table; LTA2 — 18 gauge

Finish: Galvanized; see Corrosion Information, pp. 12–15

Installation:

- Use all specified fasteners; see General Notes.
- Products shall be installed such that the Titen Turbo screws and Titen HD® screw anchors are not exposed to the exterior environment.

H Ties:

- Connectors attached using hex head Titen Turbo screws.
- Attach to grouted concrete block with a minimum one #5 rebar horizontal in the course.
- Hurricane ties do not replace solid blocking.

LTA2:

- Whether in grout-filled CMU or concrete, the LTA2 must be embedded to the depth of the embedment line stamped on the part.
- A minimum of one horizontal #5 rebar is required at top of concrete or in the top course of grout-filled CMU.
- For parallel-to-wall applications, install the LTA2 with flanges facing the center of the wall. Minimum edge distance of 1½" required.

Codes: See p. 11 for Code Reference Key Chart

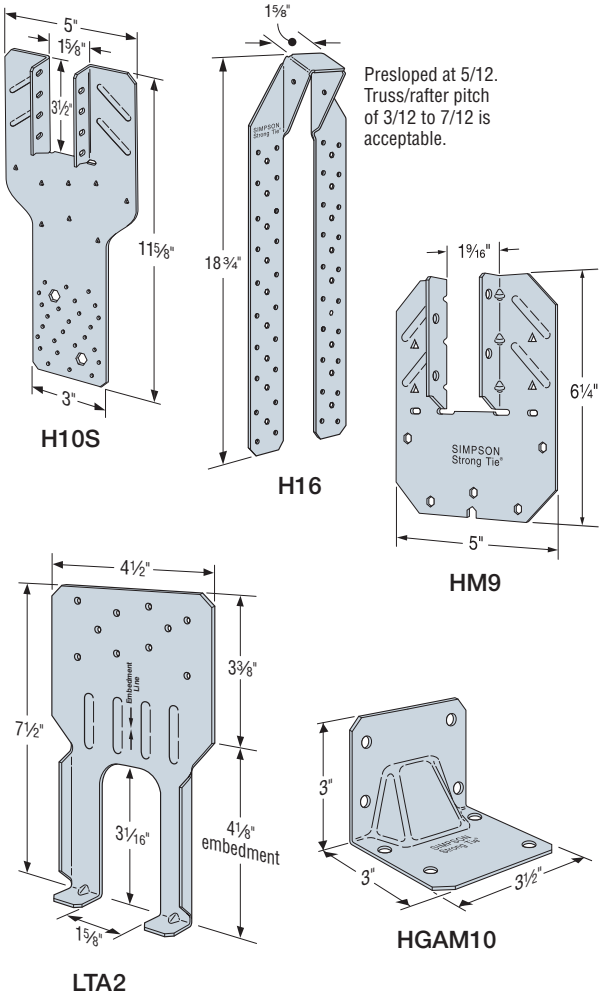

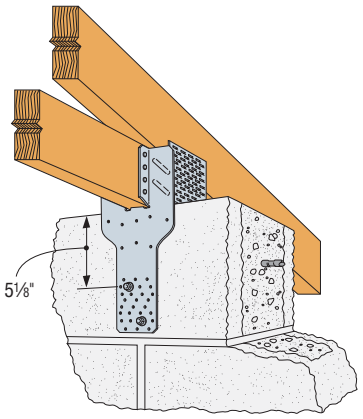

Typical H10S Installation

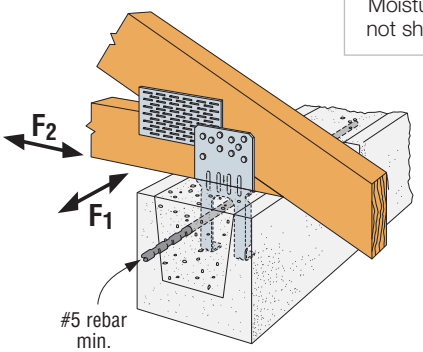

LTA2 Perpendicular-to-Wall Installation

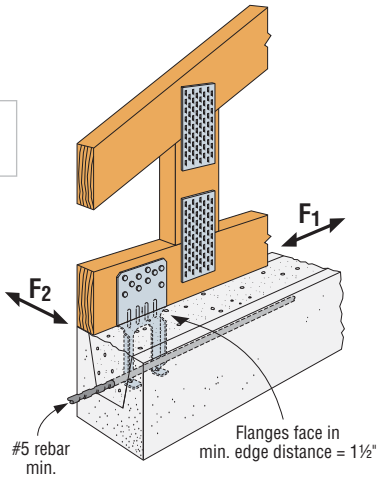

LTA2 Parallel-to-Wall Installation

C-C-2021 ©2021 SIMPSON STRONG-TIE COMPANY INC.

H/LTA2

Seismic and Hurricane Ties / Lateral Truss Anchor (cont.)

Model No.	Ga.	W (in.)	L (in.)	Fasteners (in.)			DF/SP Allowable Loads			SPF/HF Allowable Loads			Code Ref.
				To Rafter / Truss	To GFCMU Titen Turbo™	To Concrete Titen Turbo	Uplift	Lateral (160)		Uplift	Lateral (160)		
							(160)	F_1	F_2	(160)	F_1	F_2	
HM9KT	18	1 9/16	6 1/4	(4) 1/4 x 1 1/2 SDS	(5) 1/4 x 2 1/4	(5) 1/4 x 1 3/4	760	670	190	760	670	190	FL
HGAM10KTA	14	—	—	(4) 1/4 x 1 1/2 SDS	(4) 1/4 x 2 3/4	(4) 1/4 x 1 3/4	810	875	1,105[8]	585	630	795[8]	
H10S	18	1 5/8	11 5/8	(8) 0.131 x 1 1/2	(2) 3/8 x 4 Titen HD®	(2) 3/8 x 4 Titen HD®	910	—	—	780	—	—	
LTA2 Perpendicular-to-Wall Installation	18	—	—	(10) 0.148 x 1 1/2	Embed	Embed	1,180	415	875	990	415	735	
LTA2 Parallel-to-Wall Installation	18	—	—	(10) 0.148 x 1 1/2	Embed	Embed	1,180	950	220	990	800	220	
H16	18	1 5/8	18 3/4	(2) 0.148 x 1 1/2	(6) 1/4 x 2 1/4	(6) 1/4 x 1 3/4	1,370	—	—	1,180	—	—	

1. Loads have been increased for wind or earthquake loading, with no further increase allowed. Reduce where other loads govern.
2. HGAM10KTA allowable loads are for one anchor. A minimum rafter thickness of 2 1/2" must be used when framing anchors are installed on each side of the rafter or truss.
3. Concrete shall have a minimum compressive strength of f'_c = 2,500 psi.
4. Grout-filled CMU (GFCMU) shall have a minimum compressive strength of f'_m = 1,500 psi.
5. The HM9KT and HGAM10KTA are kits with (20) HM9 and (10) HGAM10 connectors packaged with Strong-Drive® SDS Heavy-Duty Connector screws and 2 1/4" and 2 3/4" Titen Turbo screws, respectively. (1 3/4" Titen Turbo screws for concrete installations sold separately.)
6. See p. 353 for Titen Turbo screw information.
7. HGAM10 F_2 loads are for forces into the connector. F_2 loads away from the connector are 640 lb. (DF/SP) and 460 lb. (SPF/HF).
8. LTA2 allowable uplift on SP is 1,350 lb. for perpendicular-to-wall installation and parallel-to-wall installation.
9. **Fasteners:** Nail dimensions are listed diameter by length. SDS screws are Simpson Strong-Tie® Strong-Drive® SDS Heavy-Duty Connector screws. Titen Turbo screws are Simpson Strong-Tie concrete and masonry screws (hex-head model required). See pp. 21–22 for fastener information.

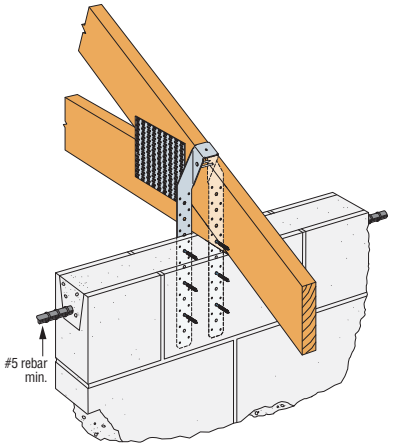

❶ H16 Installed into Masonry

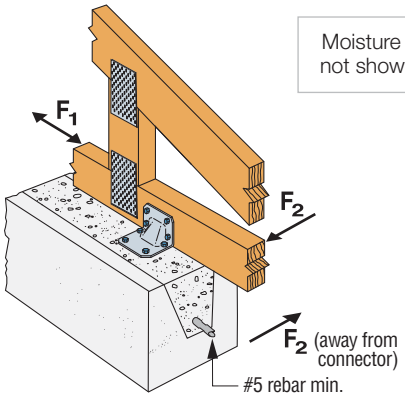

❷ HGAM10 Installed into Masonry

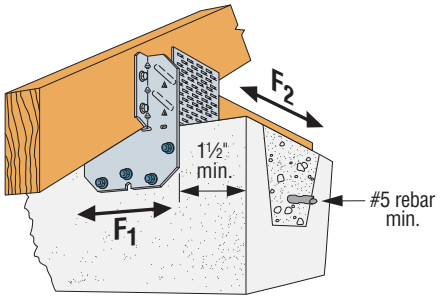

❸ HM9 Attaching Truss to Masonry

C-C-2021 ©2021 SIMPSON STRONG-TIE COMPANY INC.

META/HETA/HHETA/HETAL/DETAL/TSS/TBP8

SIMPSON Strong-Tie

Embedded Truss Anchors and Truss Seat Snap-In

The embedded truss anchor series provides an engineered method to properly attach roof trusses to concrete and masonry walls. The products are designed with staggered nail patterns for greater uplift resistance. Information regarding the use of two anchors on single- and multi-ply trusses is included.

Simpson Strong-Tie provides two different moisture barrier plates between the concrete/masonry and truss. The TSS is a preassembled, companion product of the META and some HETA models. The TBP8 seat plate also provides a moisture barrier installed prior to truss placement. The seat plate is installed with prongs, instead of fasteners.

The DETAL20 combines dual embedded anchors with partially embedded moisture barrier to provide higher lateral and uplift loads.

Material: HHETA — 14 gauge; HETA — 16 gauge; HETAL — strap 16 gauge, truss seat 18 gauge; META — 18 gauge; TSS/TBP8 — 22 gauge; DETAL — 16 gauge (barrier — 18 gauge)

Finish: Galvanized. Some products available in ZMAX® coating or stainless steel; see Corrosion Information, pp. 12–15.

Installation:

- Use all specified fasteners; see General Notes.
- The META, HETA and HHETA are embedded 4" into a 6" min. concrete beam or 8" nominal grouted block wall; HETAL is embedded 5⅛"; DETAL is embedded 4½".
- The DETAL20 is installed centered and flush on top of an 8" masonry bond beam or concrete tie beam. The moisture barrier seat bears on masonry face shell or concrete tie beam form boards; the two flanges embed into grout or concrete. The two embedded anchors shall be installed vertically into grout or concrete.
- The TSS moisture barrier may be preattached to the truss using 0.113" x 2" nails.
- For mislocated truss anchors which are greater than ⅛" but less than 1½" from the face of the truss, a shim must be provided. Shim design by Truss Engineer. When gap is greater than 1½", abandon existing embedded truss anchor and install new anchor per designer.
- Minimum spacing of single anchors is twice the embedment depth for full load. For closer spacing, see loads for double anchor installation.
- In double anchor installations, install anchors with spoons facing outward and straps spaced no more than ⅛" wider than the rafter/truss width. Do not install nails where the straps overlap when wrapped over the rafter/truss.
- Straps do not need to be wrapped over the rafter/truss to achieve tabulated loads, unless noted otherwise.

Codes: See p. 11 for Code Reference Key Chart

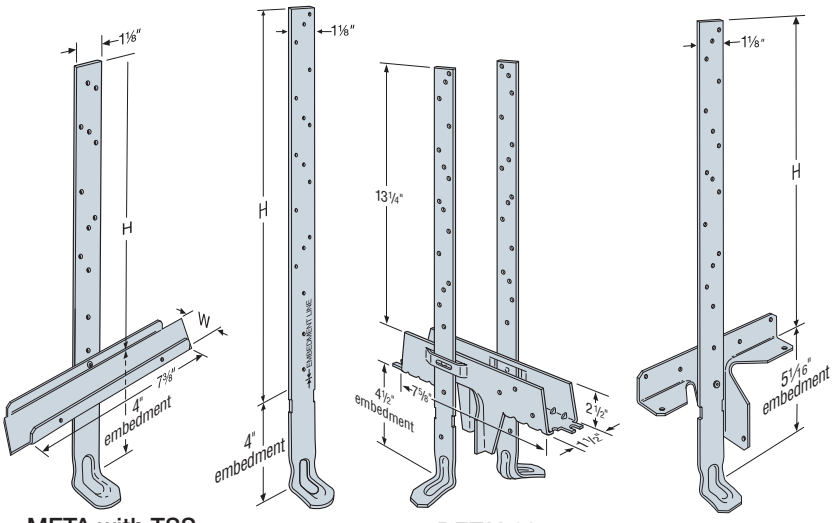

META with TSS

HETA20 *(HHETA similar)*

DETAL20 US Patent 7,987,636

HETAL

Model No.	W (in.)
TSS2	1¾
TSS2-2	3⅛
TSS4	3⅝

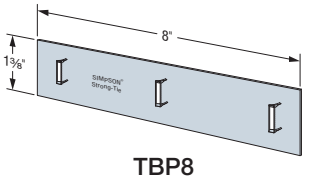

TBP8

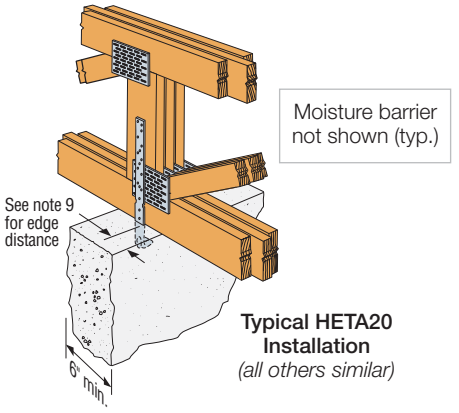

Typical HETA20 Installation *(all others similar)*

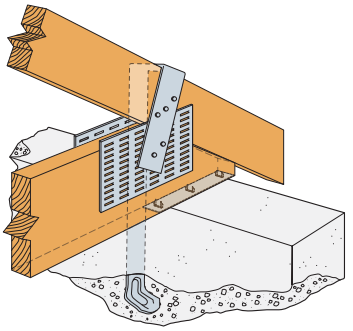

Typical META Installed with TBP8

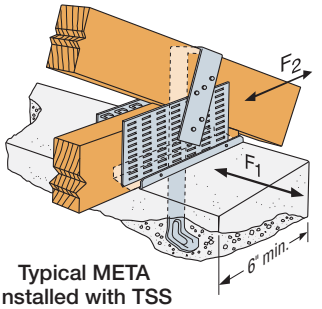

Typical META Installed with TSS

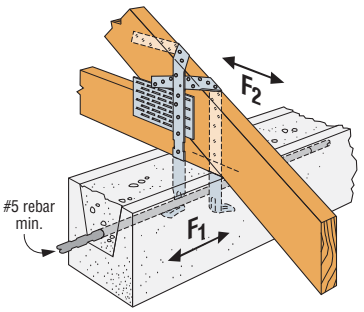

Typical Installation with Two METAs

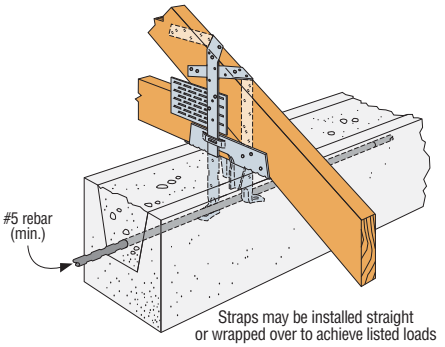

Typical DETAL Installation

C-C-2021 ©2021 SIMPSON STRONG-TIE COMPANY INC.

META/HETA/HHETA/HETAL/DETAL/TSS/TBP8

Embedded Truss Anchors and Truss Seat Snap-In (cont.)

These products are available with additional corrosion protection. For more information, see p. 14.

SS For stainless-steel fasteners, see p. 21.

Model No.	H (in.)	1-Ply Southern Pine (SP) Rafter/Truss				2- or 3-Ply Southern Pine (SP) Rafter/Truss					Code Ref.
		Fasteners (in.)	Uplift (160) GFCMU/ Concrete	F_1 (160)	F_2 (160)	Fasteners (in.)	Uplift (160) GFCMU	Uplift (160) Concrete	F_1 (160)	F_2 (160)	
Single Anchor											
META12	8	(7) 0.148 x 1½	1,420	340	770	(6) 0.162 x 3½	1,450	1,450	340	770	FL
META16	12	(8) 0.148 x 1½	1,450	340	770	(6) 0.162 x 3½	1,450	1,450	340	770	
META18	14										
META20	16										
META24	20										
META40	36										
HETA12	8	(7) 0.148 x 1½	1,455	340	770	(7) 0.162 x 3½	1,730	1,730	340	770	
HETA16	12	(9) 0.148 x 1½	1,810	340	770	(8) 0.162 x 3½	1,810	1,810	340	770	
HETA20	16										
HETA24	20										
HETA40	36										
HHETA16	12	(10) 0.148 x 1½	2,120	340	770	(9) 0.162 x 3½	2,120	2,120	340	770	
HHETA20	16										
HHETA24	20										
HHETA40	36										
HETAL12	7	(10) 0.148 x 1½	1,040	390	1,040	(10) 0.162 x 3½	1,235	1,235	390	1,040	
HETAL16	11	(14) 0.148 x 1½	1,810	390	1,040	(13) 0.162 x 3½	1,810	1,810	390	1,040	
HETAL20	15										
Double Anchor											
META12	8	(10) 0.148 x 1½	1,875	680	770	(14) 0.162 x 3½	1,795	2,435	1,285	1,080	FL
META16	12	(10) 0.148 x 1½	1,875	680	770	(14) 0.162 x 3½	1,795	2,435	1,285	1,080	
META18	14										
META20	16										
META24	20										
META40	36										
HETA12	8	(10) 0.148 x 1½	1,920	680	770	(12) 0.162 x 3½	2,365	2,560	1,350	1,430	
HETA16	12	(10) 0.148 x 1½	1,920	680	770	(12) 0.162 x 3½	2,365	2,560	1,350	1,430	
HETA20	16										
HETA24	20										
HETA40	36										
HHETA16	12	(10) 0.148 x 1½	1,920	680	770	(12) 0.162 x 3½	2,365	3,180	1,350	1,430	
HHETA20	16										
HHETA24	20										
HHETA40	36										
DETAL20	15¾	(18) 0.148 x 1½	2,480	2,000	1,370	—	—	—	—	—	

1. Loads have been increased for wind or earthquake loading, with no further increase allowed. Reduce where other loads govern.
2. Concrete shall have a minimum compressive strength of f'_c = 2,500 psi.
3. Grout-filled CMU (GFCMU) shall have a minimum compressive strength of f'_m = 1,500 psi.
4. For simultaneous loads in more than one direction, the connector must be evaluated using either the Unity Equation or the 75% Rule, as described in Straps and Ties General Notes on p. 266.
5. F_1 lateral load toward face of HETAL is 1,870 lb.
6. The HHETA allowable F_1 load can be increased to 435 lb. if the strap is wrapped over the truss and a minimum of 12 nails are installed.
7. The DETAL20 requires six nails installed in the truss seat and six nails in each strap. The HETAL requires five nails installed in the truss seat. For double META/HETA/HHETA installations, install half of the required fasteners in each strap.
8. F_1 lateral loads listed for double META/HETA/HHETA on 2- or 3-ply rafter/truss may cause an additional 1⁄16" deflection beyond the standard ⅛" limit where the straps are installed not wrapped over the heel as shown.
9. Minimum edge distance for META/HETA/HHETA is 1½" for concrete and 2" for masonry. Where edge distance is less than 2" for masonry, the maximum uplift load is 1,005 lb.
10. It is acceptable to use a reduced number of fasteners provided that there is a reduction in uplift allowable load. Calculate the connector allowable load for a reduced number of nails as follows: Allowable Load = (No. of Nails Used) / (No. of Nails in Table) x Table Load. Lateral loads require the lowest six nail holes filled for META and lowest seven nail holes filled for HETA/HHETA.
11. **Fasteners:** Nail dimensions are listed diameter by length. See pp. 21–22 for fastener information.

C-C-2021 ©2021 SIMPSON STRONG-TIE COMPANY INC.

MSTAM/MSTCM

SIMPSON Strong-Tie®

Strap Ties

MSTAM and MSTCM models are designed for wood-to-masonry applications.

The MSTC series has countersunk nail slots for a lower nailing profile.

Finish: Galvanized. Some products are available in stainless steel or ZMAX® coating. See Corrosion Information, pp. 12–15.

Installation:

- Use all specified fasteners; see General Notes
- Attaches to grouted concrete block and wood framing
- Minimum end and edge distance for Titen Turbo™ screws is 1½"

Codes: See p. 11 for Code Reference Key Chart

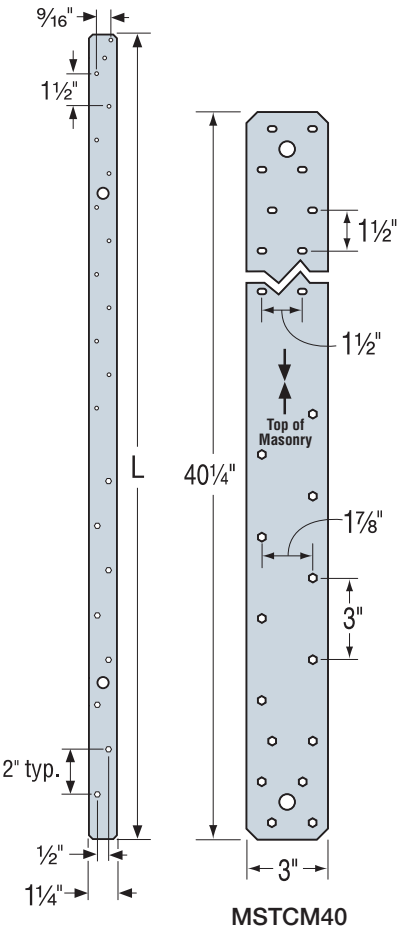

MSTAM36

MSTCM40
(other MSTCM similar)

These products are available with additional corrosion protection. For more information, see p. 14.

Masonry and Concrete Applications

Model No.	Ga.	Dim. (in.) W	Dim. (in.) L	Fasteners (in.) Nails	Fasteners (in.) GFCMU Titen Turbo	Fasteners (in.) Concrete Titen Turbo	Allowable Tension Load DF/SP/SPF/HF (160) GFCMU	Allowable Tension Load DF/SP/SPF/HF (160) Concrete	Code Ref.
MSTAM24	18	1¼	24	(9) 0.148 x 3	(5) ¼ x 2¼	(5) ¼ x 1¾	1,425	1,450	FL
MSTAM36	16	1¼	36	(13) 0.148 x 3	(8) ¼ x 2¼	(8) ¼ x 1¾	1,870	1,870	
MSTCM40	16	3	40¼	(26) 0.148 x 3¼	(14) ¼ x 2¼	(14) ¼ x 1¾	4,220	4,220	
MSTCM60	16	3	59½	(26) 0.148 x 3¼	(14) ¼ x 2¼	(14) ¼ x 1¾	4,220	4,220	

See footnotes below.

Floor-to-Floor Clear Span Table

Model No.	End Length (in.)	Clear Span (in.)	Fasteners (Total) (in.) Nails	Fasteners (Total) (in.) GFCMU Titen Turbo	Fasteners (Total) (in.) Concrete Titen Turbo	Allowable Tension/ Uplift Loads DF/SP (160)	Allowable Tension/ Uplift Loads SPF/HF (160)	Code Ref.
MSTAM36	8¾	16 or 18	(7) 0.148 x 3	(4) ¼ x 2¼	(4) ¼ x 1¾	1,140	1,140	—
MSTCM40	11⅛	16 or 18	(14) 0.148 x 3¼	(10) ¼ x 2¼	(10) ¼ x 1¾	2,500	2,325	
MSTCM60	17⅛	22¼	(26) 0.148 x 3¼	(14) ¼ x 2¼	(14) ¼ x 1¾	4,220	4,220	
MSTCM60	17⅛	26¼	(20) 0.148 x 3¼	(14) ¼ x 2¼	(14) ¼ x 1¾	3,840	3,320	

1. Loads have been increased for wind or earthquake loading, with no further increase allowed. Reduce where other loads govern.
2. Minimum edge distance for Titen Turbo screw is 1½".
3. Concrete shall have a minimum compressive strength of f'_c = 2,500 psi.
4. Grout-filled CMU (GFCMU) shall have a minimum compressive strength of f'_m = 1,500 psi.
5. Products shall be installed such that Titen Turbo screws are not exposed to the exterior environment.
6. See p. 353 for Titen Turbo screw information.
7. **Fasteners:** Nail dimensions are diameter by length. Titen Turbo screws are Simpson Strong-Tie concrete and masonry screws (hex-head model required). See pp. 21–22 for fastener information.

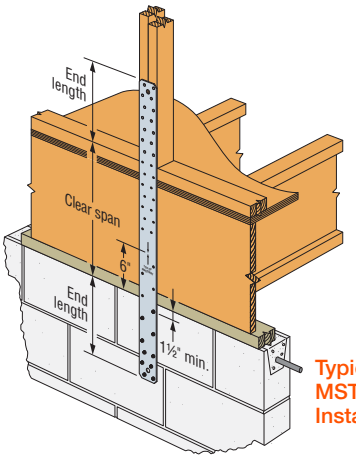

Typical MSTAM40 Installation

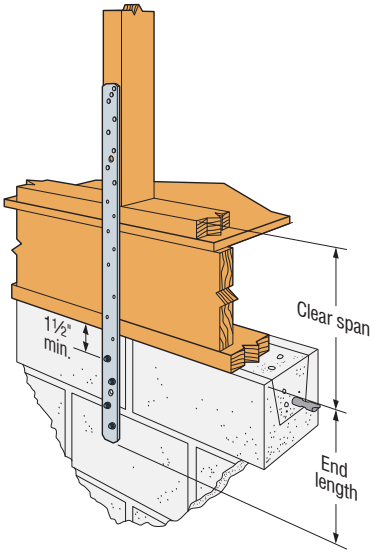

Typical MSTAM36 Installation

C-C-2021 ©2021 SIMPSON STRONG-TIE COMPANY INC.

MTSM/HTSM

Twist Straps

The MTSM and HTSM offer high-strength truss-to-masonry connections.

Material: MTSM — 16 gauge; HTSM — 14 gauge

Finish: Galvanized; see Corrosion Information, pp. 12–15

Installation:

- Use all specified fasteners; see General Notes
- Installs with hex-head Titen Turbo™ screws
- Attach to either side of grouted concrete block with a minimum one #5 rebar horizontal
- MTSM and HTSM can be field bent once to a 45° angle
- Products shall be installed such that Titen Turbo screws are not exposed to the exterior environment.

Codes: See p. 11 for Code Reference Key Chart

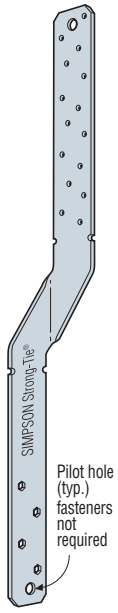

HTSM20
(MTSM20 similar)

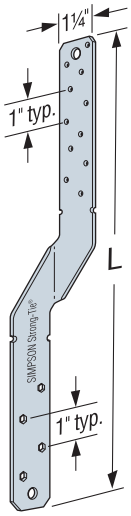

MTSM16
(HTSM16 similar)

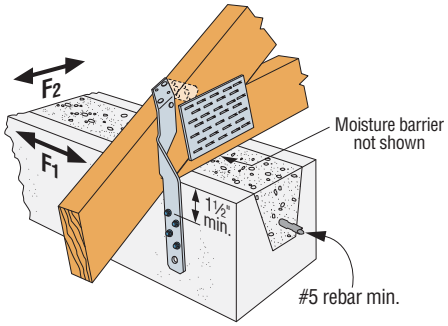

Typical MTSM20 Installation
(HTSM20 similar)

Model No.	L (in.)	Fasteners (in.)			DF/SP Allowable Loads	SPF/HF Allowable Loads	Allowable Lateral Loads (DF/SP/SPF/HF)		Code Ref.
		Truss/Rafter	GFCMU Titen Turbo	Concrete Titen Turbo	Uplift (160)	Uplift (160)	F_1 (160)	F_2 (160)	
MTSM16	16	(7) 0.148 x 1½	(4) ¼ x 2¼	(4) ¼ x 1¾	830	715	120	90	FL
MTSM20	20	(7) 0.148 x 1½	(4) ¼ x 2¼	(4) ¼ x 1¾	830	715			
HTSM16	16	(8) 0.148 x 1½	(4) ¼ x 2¼	(4) ¼ x 1¾	1,110	955			
HTSM20	20	(10) 0.148 x 1½	(4) ¼ x 2¼	(4) ¼ x 1¾	1,110	955			

1. Loads have been increased for wind or earthquake loading, with no further increase allowed. Reduce where other loads govern.
2. Twist straps do not need to be wrapped over the truss to achieve the allowable load.
3. Minimum edge distance for Titen Turbo screw is 1½".
4. See p. 353 for Titen Turbo screw information.
5. Concrete shall have a minimum compressive strength of f'_c = 2,500 psi.
6. Grout-filled CMU (GFCMU) shall have a minimum compressive strength of f'_m = 1,500 psi.
7. Lateral loads apply when the first seven nail holes on the truss/rafter near the bend line are filled. Any other fasteners required can be installed in any open hole.
8. **Fasteners:** Nail dimensions are listed diameter by length. Titen Turbo screws are Simpson Strong-Tie concrete and masonry screws (hex-head model required). See pp. 21–22 for fastener information.

C-C-2021 ©2021 SIMPSON STRONG-TIE COMPANY INC.

FGTR/LGT/VGT

Retrofit Girder Tiedowns

The LGT, VGT and FGTR products are moderate-to-high load capacity girder tiedowns for new or retrofit applications.

LGT connectors provide a low-profile connection to the wall for easy installation of drywall. Simple to install and can be installed on the inside or outside of the wall.

The VGT variable girder tiedown is a higher capacity alternative to the LGT and MGT for girder trusses. It attaches with Strong-Drive® SDS Heavy-Duty Connector screws to the side of truss and features a predeflected crescent washer that allows it to accommodate top chord pitches up to 8/12. The VGT is also available with one flange concealed for attachment to trusses with no tail.

The FGTR face-mount girder tiedown is a non-pitch specific girder tiedown that offers the highest uplift capacity for retrofit applications. The FGTRHL/R is designed for corner hip applications.

Material: VGT — 7 gauge; LGT2 — 14 gauge; LGT3/LGT4 — 12 gauge; FGTR — straps: 7 gauge, plate: 3 gauge

Finish: VGT, LGT — galvanized; FGTR — powder coated

Installation:

- Use all specified fasteners; see General Notes.
- Connectors attached using Titen Turbo™ screws shall have hex heads.
- To achieve the loads listed in the table below, the product shall be attached to a grouted and reinforced block wall or a reinforced concrete wall designed by others to transfer the high concentrated uplift loads to the foundation.
- Strong-Drive SDS Heavy-Duty Connector screws included with LGT3, LGT4, VGT series and FGTR series.
- Products shall be installed such that Titen Turbo screws and non-stainless Titen HD® anchors are not exposed to the exterior environment.

VGT/FGTR:

- Screw holes are configured to allow for double installation on a two-ply (minimum) truss.
- The product can be installed in a single application or in pairs to achieve a higher uplift capacity.
- Can be installed on roof pitches up to 8/12 or on a bottom chord designed to transfer the loads.
- FGTR — Only two of the four holes provided on each strap are required to be filled to achieve the catalog loads. The first Titen HD anchor ½" x 5" (THD included) shall be installed a minimum of 4" from the top of the wall. Anchors shall not be installed in adjacent holes.
- VGT — When installed on trusses with no overhangs, specify VGTR/L.
- VGT — Install washer component (provided) so that top of washer is horizontal as well as parallel with top of wall.

Codes: See p. 11 for Code Reference Key Chart

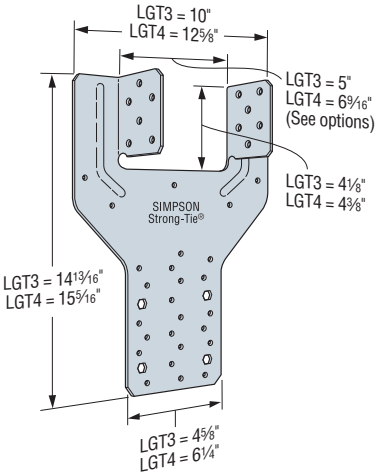

LGT3-SDS2.5
(LGT4-SDS3 similar)

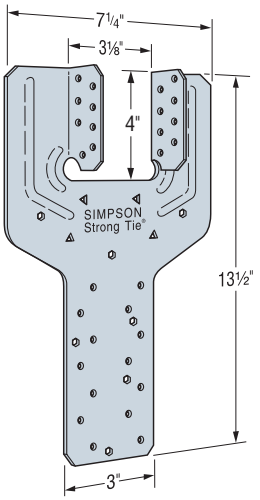

LGT2

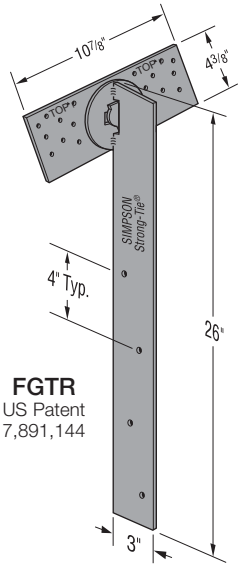

FGTR
US Patent 7,891,144

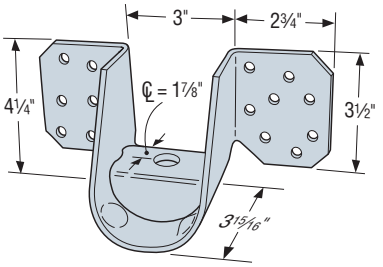

VGT
US Patent 7,707,785

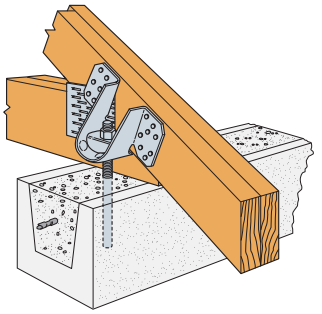

Typical VGT Installation

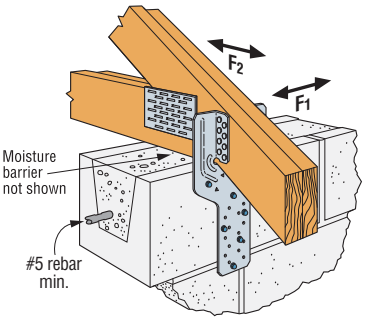

Typical LGT2 Installation into Masonry
(LGT3 and LGT4 similar, but installed with Titen HD)

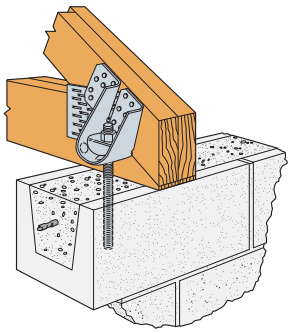

Typical VGTR Installation
(VGTL similar)

C-C-2021 ©2021 SIMPSON STRONG-TIE COMPANY INC.

FGTR/LGT/VGT

Retrofit Girder Tiedowns (cont.)

Model No.	Qty.	No. of Plies	Fasteners (in.)		Allowable Uplift Load (160)		Code Ref.
			Girder	Concrete and GFCMU	DF/SP	SPF/HF	
LGT2	1	2 ply	(16) 0.148 x 3¼	(7) ¼ x 2¼ Titen Turbo™[10]	2,030	1,750	FL
LGT3-SDS2.5	1	3 ply	(12) ¼ x 2½ SDS	(4) ⅜ x 5 Titen HD®	3,285	2,365	
LGT4-SDS3	1	4 ply	(16) ¼ x 3 SDS	(4) ⅜ x 5 Titen HD	3,285	2,365	
VGT	1	2 ply min.	(16) ¼ x 3 SDS	(1) ⅝ anchor[2]	4,940	3,555	IBC, FL, LA
	2	2 ply min.	(32) ¼ x 3 SDS	(2) ⅝ anchors[2]	7,185	5,170	
		3 ply min.	(32) ¼ x 3 SDS	(2) ⅝ anchors[2]	8,890	6,400	
VGTL/R	1	2 ply min.	(16) ¼ x 3 SDS	(1) ⅝ anchor[2]	2,225	1,600	
	2		(32) ¼ x 3 SDS	(2) ⅝ anchors[2]	5,545	3,990	
FGTR	1	2 ply min.	(18) ¼ x 3 SDS	(2) ½ x 5 Titen HD	4,725	3,400	FL
	2		(36) ¼ x 3 SDS	(4) ½ x 5 Titen HD	8,885	6,395	
FGTRHL/R	1	2 ply min.	(18) ¼ x 3 SDS	(2) ½ x 5 Titen HD	3,635	2,615	

1. Allowable loads have been increased for wind or earthquake loading with no further increase allowed. Reduce where other loads govern.
2. To achieve the loads listed for the VGT single- and double-connector options, anchorage into a 8" wide concrete tie-beam or grouted and reinforced CMU bond beam can be made using SET-XP® anchoring adhesive with a minimum embedment depth of 12", with a minimum end distance of 12", and centered in the 8" member. Vertical reinforcement may be required to transfer the loads per designer. Alternate anchorage solutions may be determined by designer.
3. Concrete shall have a minimum compressive strength of f'_c = 2,500 psi.
4. Grout-filled CMU (GFCMU) shall have a minimum compressive strength of f'_m = 1,500 psi.
5. FGTR — minimum edge distance for Titen HD® anchor is 4".
6. FGTR — Titen HD anchors should be spaced in every other hole on the part.
7. FGTR — Titen HD anchors and Strong-Drive® SDS Heavy-Duty Connector screws are provided with the part.
8. For a single FGTR corner installation (4" min. end distance for Titen HD anchors), allowable uplift is 4,425 lb. (DF/SP) and 3,400 lb. (SPF/HF).
9. LGT2 — F_1 load = 700 lb.; F_2 load = 170 lb.; LGT3 — F_1 load = 795 lb.; F_2 load = 385 lb.; LGT4 — F_1 load = 2,000 lb.; F_2 load = 675 lb.
10. For concrete wall applications, use ¼" x 1¾" Titen Turbo screws.
11. Strong-Drive SDS Heavy-Duty Connector screws may be installed through metal truss plates as approved by the Truss Designer, provided the requirements of ANSI/TPI 1-2014, Sections 7.5.3.4 and 8.9.2 are met (predrilling required through the plate using a 5⁄32" bit maximum).
12. See p. 353 for Titen Turbo screw information.
13. **Fasteners:** Nail dimensions are listed diameter by length. SDS screws are Simpson Strong-Tie® Strong-Drive screws. Titen Turbo screws are Simpson Strong-Tie concrete and masonry screws (hex-head model required). See pp. 21–22 for fastener information.

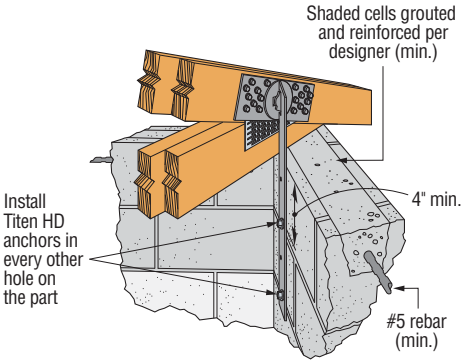

FGTRHL Installation *(FGTRHR similar)*

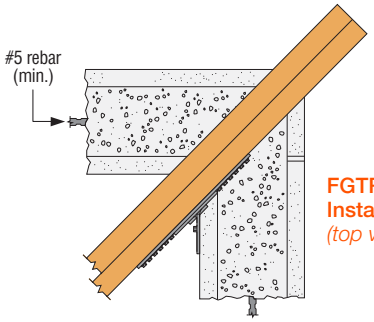

FGTRHL Installation *(top view)*

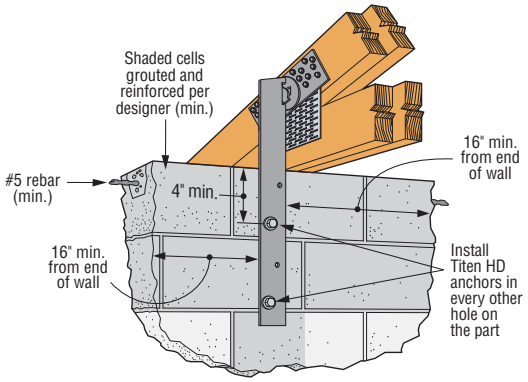

Typical FGTR Single Installation

Moisture barrier not shown (typ.)

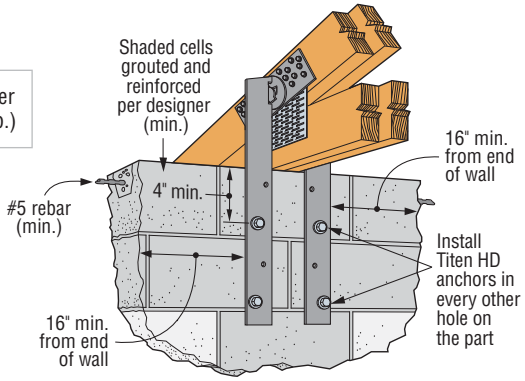

Typical FGTR Double Installation

C-C-2021 ©2021 SIMPSON STRONG-TIE COMPANY INC.

MGT/HGT

Girder Tiedowns

The MGT and HGT series are girder tiedowns for moderate to high load applications that are typically installed prior to roof sheathing. The MGT can wrap over the heel and is anchored on one side of the truss. The HGT straddles the heel and anchors on both sides of the truss. The HGT is field-adjustable, making it suitable for trusses with top chord slopes up to 8/12. The HGT is available in sizes for two-, three- and four-ply widths.

Material: MGT — 12 gauge; HGT — 7 gauge

Finish: MGT — galvanized; HGT — Simpson Strong-Tie gray paint

Installation:

- Use all specified fasteners; see General Notes
- When the HGT-3 is used with a two-ply girder or beam, shimming is required and must be fastened to act as one unit
- Attach to grouted concrete block with a minimum one #5 rebar horizontal in the top lintel block
- MGT — May be installed with straps straight vertically on minimum 5½"-wide truss web, or with straps wrapped over truss heel. For wrapped installations, install minimum of six nails into the face of the roof member on the same side as MGT base.
- See pp. 284–285 for wood applications

Codes: See p. 11 for Code Reference Key Chart

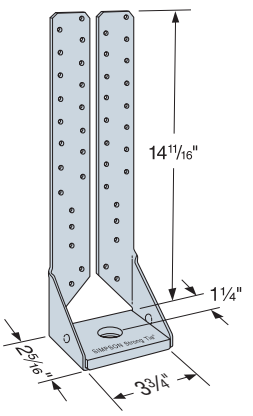

MGT

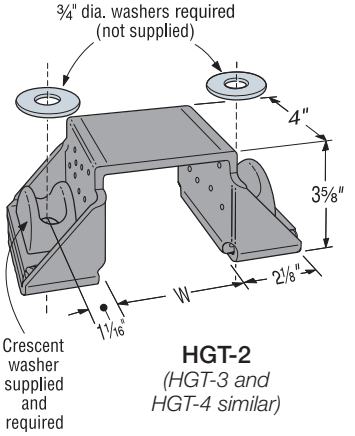

HGT-2
(HGT-3 and HGT-4 similar)

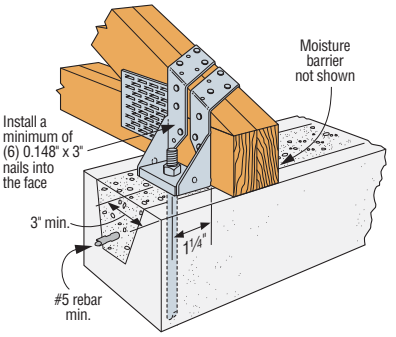

Typical MGT Installation

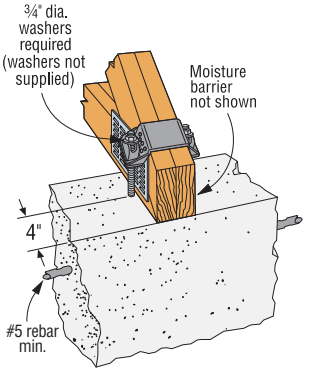

Typical HGT-2 Installation into Concrete

Model No.	W (in.)	O.C. Dimension Between Anchors (in.)	Fasteners (in.)		Allowable Uplift Loads		Code Ref.
			Girder	Concrete and GFCMU Anchor	DF/SP (160)	SPF/HF (160)	
MGT	3¾	—	(22) 0.148 x 3	(1) ⅝	3,965	3,330	IBC, FL, LA
HGT-2	3 5/16	5¾	(16) 0.148 x 3	(2) ¾	10,690	10,690	
HGT-3	4 15/16	7⅜	(16) 0.148 x 3	(2) ¾	10,790	10,790	
HGT-4	6 9/16	9	(16) 0.148 x 3	(2) ¾	11,455	11,455	

1. Attached members must be designed to resist applied loads.
2. Concrete shall have a minimum compressive strength of f'_c = 2,500 psi.
3. Grout-filled CMU (GFCMU) shall have a minimum compressive strength of f'_m = 1,500 psi.
4. To achieve the loads listed for the MGT and HGT, install SET-XP® anchoring adhesive anchorage into a 8"-wide concrete tie-beam or grouted and reinforced CMU bond beam with a minimum embedment depth of 12". Vertical reinforcement may be required to transfer the loads per designer. Alternate anchorage may be determined by designer.
5. Allowable loads have been increased for wind or earthquake loading with no further increase allowed. Reduce where other loads govern.
6. MGT allowable loads are based on installation on a minimum 2-ply wood truss or beam. For single-ply applications, install MGT with (22) 0.148" x 1.5" nails for uplift of 3,165 lb. (DF), 3,275 lb. (SP) and 2,720 lb. (SPF/HF).
7. **Fasteners:** Nail dimensions are listed diameter by length. See pp. 21–22 for fastener information.

C-C-2021 ©2021 SIMPSON STRONG-TIE COMPANY INC.

CCQM/CCTQM/ECCLQM/CCCQM/ECCLQMD

Column Caps for GFCMU and Concrete Piers

The CCQM/CCTQM/CCCQM/ECCLQM embedded column caps are designed for use in raised pier foundations and applications where heavy timbers rest on concrete or concrete block columns. The heavy-gauge beam seats and unique SSTB-style anchor bolts provide the high uplift and lateral resistance needed to help resist high-wind events. The ECCLQMD is a variation that incorporates an additional seat to support a third member at the corner connection. The CCCQM is a variation that incorporates a stirrup on each side for intermediate support beams perpendicular to the main channel.

Framing is fastened with Strong-Drive® SDS Heavy-Duty Connector screws (included) that install with no predrilling and feature a corrosion-resistant double-barrier coating.

CCQM — Intended for use along a floor support beam and non-corner locations

CCTQM — Also for use along a floor support beam and non-corner locations with a side stirrup that accommodates intermediate support beams coming at 90º

CCCQM — For use along a floor support beam with a stirrup on each side of the main channel that accommodates intermediate support beams coming at 90º

ECCLQM-KT — Intended for use at the corners with MSTQM straps to make the connection from the ECCLQM to the wall framing above

ECCLL/RQMD-KT — Ideal for applications where a member is needed off the corner of the structure, such as a deck joist/beam

Material: Column caps — 7 gauge; strap (MSTQM) — 12 gauge

Finish: Column caps — hot-dip galvanized or Simpson Strong-Tie gray paint; strap (MSTQM) — galvanized (ZMAX®)

Installation:

- Use all specified fasteners; see General Notes
- Reference T-C-CCQM-WS special order worksheet at **strongtie.com** for ordering assistance

Options:

- For variable widths on side stirrups specify W_3 or W_4 (3¼" to 7⅛") and add an "X" to the end of the core model name. Example: CCTQM5.50X-SDSG, W_3 = 3⅝".

Codes: See p. 11 for Code Reference Key Chart

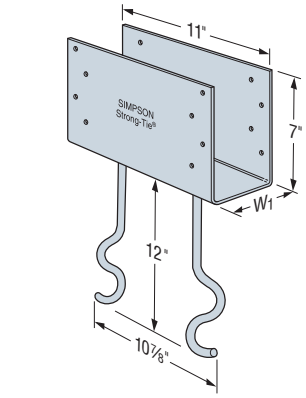

CCQM

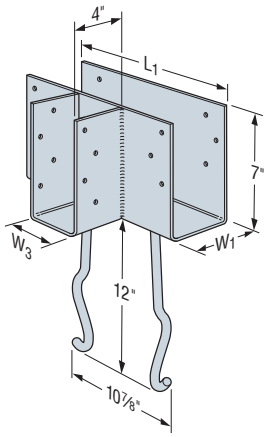

CCTQM

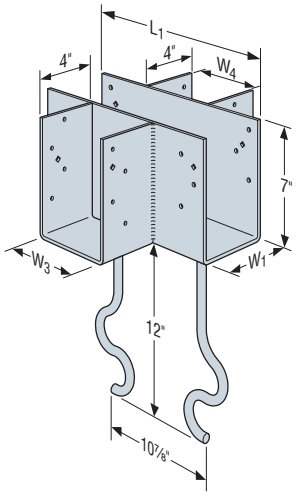

CCCQM

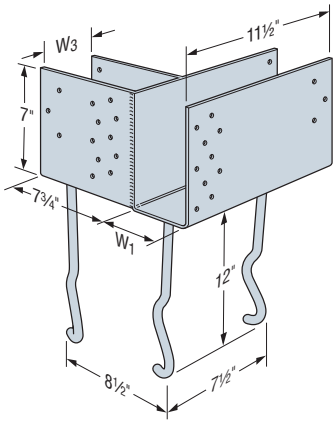

ECCLRQM
(right-hand model shown)

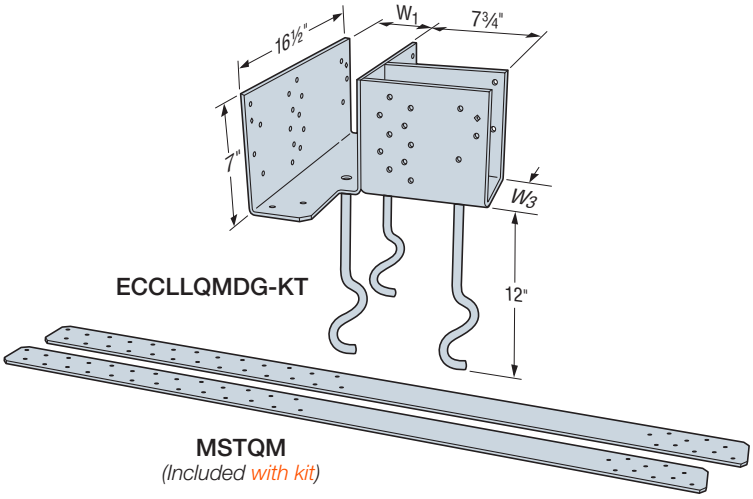

ECCLLQMDG-KT

MSTQM
(Included with kit)

C-C-2021 ©2021 SIMPSON STRONG-TIE COMPANY INC.

CCQM/CCTQM/ECCLQM/CCCQM/ECCLQMD

SIMPSON Strong-Tie®

Column Caps for GFCMU and Concrete Piers (cont.)

Dimensions

Model No.	Main Channel Width (W_1) (in.)	Side Stirrup Width (W_3 and W_4) (in.)	Main Channel Length (L_1) (in.)	Side Stirrup Length (L_2) (in.)
CCQM3.62-SDSHDG	3⅝	—	11	—
CCQM4.62-SDSHDG	4⅝	—	11	—
CCQM5.50-SDSHDG	5½	—	11	—
CCTQM3.62-SDSG	3⅝	3⅝	11½	4
CCTQM4.62-SDSG	4⅝	4⅝	13½	4
CCTQM5.50-SDSG	5½	5½	13½	4
CCCQM3.62-SDSG	3⅝	3⅝	11½	4
CCCQM4.62-SDSG	4⅝	4⅝	13½	4
CCCQM5.50-SDSG	5½	5½	13½	4
ECCLQM3.62G-KT	3⅝	3⅝	11½	7¾
ECCLQM4.62G-KT	4⅝	4⅝	11½	7¾
ECCLQM5.50G-KT	5½	5½	11½	7¾
ECCLLQMD3.62G-KT	3⅝	3⅝	16½	7¾
ECCLRQMD3.62G-KT	3⅝	3⅝	16½	7¾
ECCLRQMD4.62G-KT	4⅝	4⅝	16½	7¾
ECCLLQMD5.50G-KT	5½	5½	16½	7¾
ECCLRQMD5.50G-KT	5½	5½	16½	7¾

1. The MSTQM strap is a component of the ECCLQMD kits. It is 12 ga. (0.101"), 3" wide, and 48" long.

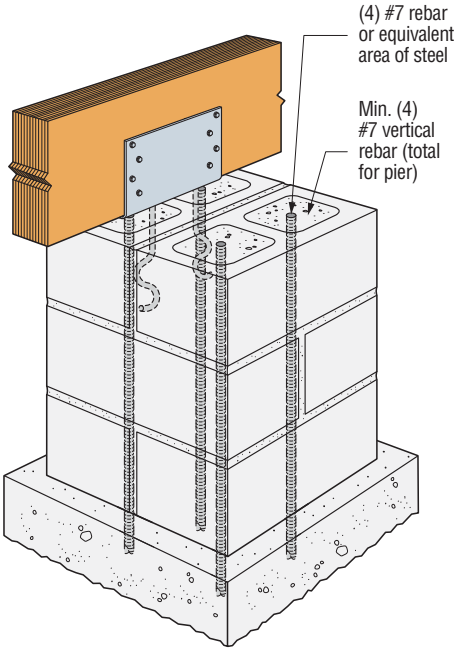

Typical CCQM Installation
For other installations and pier construction, see **strongtie.com**

These products are available with additional corrosion protection. For more information, see p. 14.

Model No.	No. of ¼" x 2½" SDS Screws			16" Square Grout-Filled CMU Pier[3,6]				16" Square CMU Shell Filled with 3,000 psi Concrete[3,7]				Deck Joist Connection		Code Ref.
				Uplift (160)			Lateral (160)	Uplift (160)			Lateral (160)	Download	Uplift	
	Main Beam	Side Beam	Deck Beam	Main Beam	Side Beam	Total		Main Beam	Side Beam	Total				
CCQM-SDSHDG	12	—	—	6,750	—	6,750	2,460	6,495	—	6,495	2,650	—	—	FL
CCTQM-SDSG	12	8	—	6,750	5,375	6,750	2,460	6,495	5,375	6,495	2,650	—	—	
CCCQM-SDSG	12	8	—	6,750	5,375	6,750	2,460	6,495	5,375	6,495	2,650	—	—	
ECCLQMG-KT[8]	16	16	—	6,240	6,240	7,340	2,220	6,240	6,240	7,830	2,565	—	—	
ECCLQMDG-KT[9]	16	16	6	6,240	6,240	7,340	2,220	6,240	6,240	7,830	2,565	5,475	2,010	

1. Loads have been increased for wind or earthquake loading, with no further increase allowed. Reduce where other loads govern.
2. Total uplift load and lateral load is based on tested anchor failure in the pier.
3. Allowable loads are based on either a 16" square grout-filled CMU pier with f'_m of 1,500 psi or a 16" square CMU shell filled with 3,000 psi concrete. A minimum of four #7 vertical rebars are required. The designer shall design and detail the GFCMU/concrete pier to resist all forces including uplift, shear and moment.
4. Pier height per designer.
5. Side beam and main beam uplift loads assume DF/SP members and are not additive.
6. The allowable loads listed for grout-filled CMU apply to solid concrete piers of 2,500 psi concrete a minimum of 16" square.
7. The allowable loads listed for CMU shell-filled with 3,000 psi concrete apply to solid concrete piers of 3,000 psi concrete a minimum of 14" square.
8. The ECCLQM-KT is a kit packaged with two MSTQM straps and (32) ¼" x 2½" Strong-Drive® SDS Heavy-Duty Connector screws. One strap may be installed on each face of the ECCLQM, using the SDS Heavy-Duty Connector screws in the beams and (26) 0.162" x 2½" nails (not provided) in the wall framing. The MSTQM strap's allowable tension load is 6,240 lb. If straps are not installed, table uplift applies to beam only.
9. The ECCLQMDG-KT is a kit packaged with two MSTQM straps and (32) ¼" x 2½" Strong-Drive SDS Heavy-Duty Connector screws. The allowable download for the deck joist connection requires 2–2x deck joist. For single 2x joist, allowable download is 5,240 lb.
10. Any side stirrup not fully supported by grout- or concrete-filled CMU has an allowable download of 7,000 lb.
11. **Fasteners:** SDS screws are Simpson Strong-Tie® Strong-Drive SDS Heavy-Duty Connector screws. See pp. 21–22 for fastener information.

C-C-2021 ©2021 SIMPSON STRONG-TIE COMPANY INC.

BT

Brick Ties

Brick ties provide a connection between the wood structure and brick veneer.

The new, high-performance BTH brick tie is a tested solution for connecting masonry veneer to wood structures across airspaces from 2" to 3", providing the flexibility needed to meet the veneer spacing requirements.

The new BTH design adds strength and versatility, making this tie the ideal solution for varied jobsite conditions. It's field-adjustable in two places and can be installed with either side facing up.

Use existing Simpson Strong-Tie brick ties, BT and BTB, for 1" prescriptive code airspace requirement, or at a closer spacing for airspaces from 1" to 2".

Material: 22 gauge

Finish: Galvanized

Installation:

- Use all specified fasteners; see General Notes
- BTH — Can be installed bent up or bent down

Codes: 2012 IRC R703.7.4; 2015 and 2018 IRC R703.8.4

To Order:
BT-R100 = retail pack of 100
BTB = bulk carton of 500
BTH = bulk carton of 500

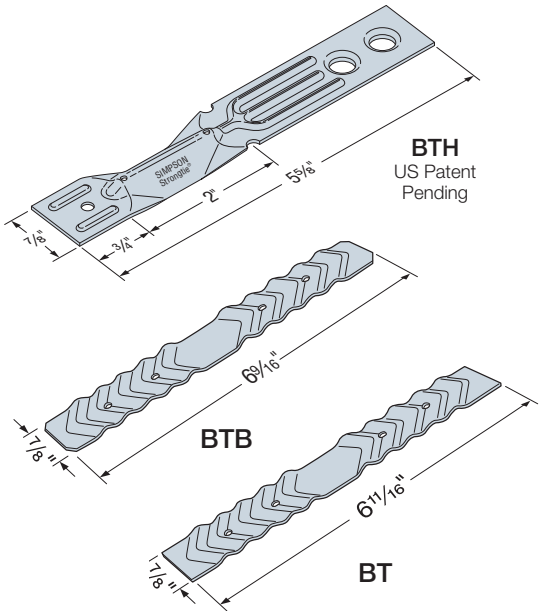

Brick Tie Spacing Table

Model No.	Fastener (in.)	Airspace	Max. Wall Area (sq. ft.) Supported per Tie	Maximum Vertical Tie Spacing (in.)		Code Ref.
				Installation on Every Stud (16" o.c.)	Installation on Every Other Stud (32" o.c.)	
BTB and BT	(1) 0.131 x 2½	1"	2.67	24	12	IBC, FL, LA
		>1" to ≤ 2"	2.00	18	9	
BTH	(1) 0.131 x 2½	2"–3"	2.67	24	12	

1. 1" airspace based on table R703.8.4(1) in 2018 IRC; airspaces larger than 1" are based on testing.
2. Spacing does not pertain to applications where wind pressures exceed 30 psf, or in seismic design categories listed in Section R703.8.4, 2018 IRC.
3. Embed ties per Section R703.8.4, 2018 IRC.
4. BTH maximum vertical offset from center of nail to the bottom of the horizontal leg is 1" for airspaces up to and including 2¾", and ¾" for airspaces greater than 2¾" and up to 3".

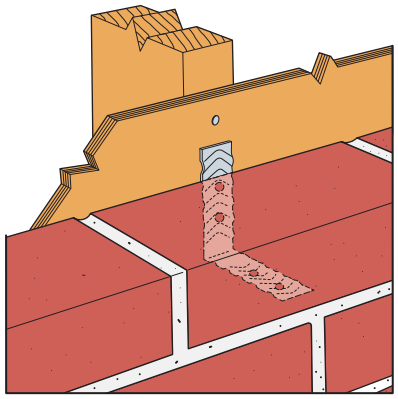

Typical BT Installation

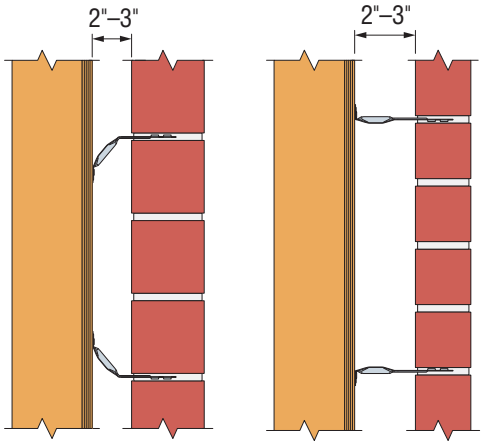

BTH adjusts for airspaces from 2"–3", and allows for minimum 1½" mortar embedment.

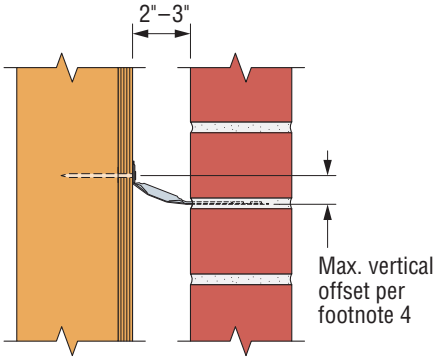

Typical BTH Installation

C-C-2021 ©2021 SIMPSON STRONG-TIE COMPANY INC.

ICFVL

Ledger Connector System

The ICFVL ledger connector system is engineered to solve the challenges of mounting wood or steel ledgers to insulated concrete form (ICF) walls. The ICFVL is designed to provide both vertical and lateral in-plane performance. The system offers many benefits over traditional anchor bolting, including better on-center spacing in most cases, faster installation and no protrusions.

The embedded legs of the ICFVL are embossed for additional stiffness and the hole enables concrete to flow through and around the connector. The exposed flange on the face of the ICF provides a structural surface for mounting wood ledger.

Material: ICFVL — 14 gauge; ICFVL-CW and ICFVL-W — 16 gauge

Finish: Galvanized

Installation:

ICFVL in ICF

- For use with a minimum 4" thick core
- Snap a chalk line for the bottom of the ledger
- Mark required on-center spacing
- Use ICFVL to mark kerfs locations
- Cut kerfs as marked
- Insert ICFVL flush to the face of the ICF
- Pour concrete

Wood Ledger Attachment — ICFVL-W or ICFVL-CW

- Slip appropriate ledger connector underneath the ledger.
- Install the eight ICF-D3.25 screws partially into the ledger. ICF-D3.25 installs best using a low-speed drill with ⅜" hex-head driver.
- For denser wood species (specific gravity ≥ 0.50), predrilling may be necessary. Predrill ledger only with 5/32" drill bit.
- Position bottom of the ledger level to the chalk line and drive the screws through the wood and into the ICFVL.

Steel Ledger Attachment

- Position bottom of the ledger level to the chalk line and against the ICFVL
- Attach with four #14 x ¾", #3 drill point screws (not provided)
- All screws should be located at least ½" from the edge of the ICFVL
- Space screws evenly

Codes: See p. 11 for Code Reference Key Chart

Warning:
Industry studies show that hardened fasteners can experience performance problems in wet environments. Accordingly, use this product in dry environments only.

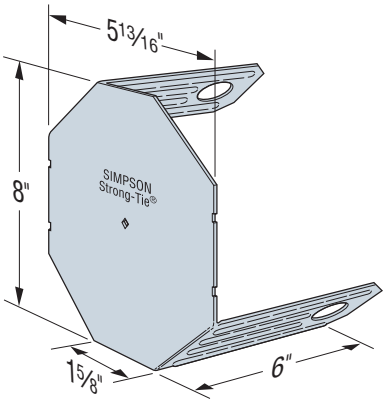

ICFVL

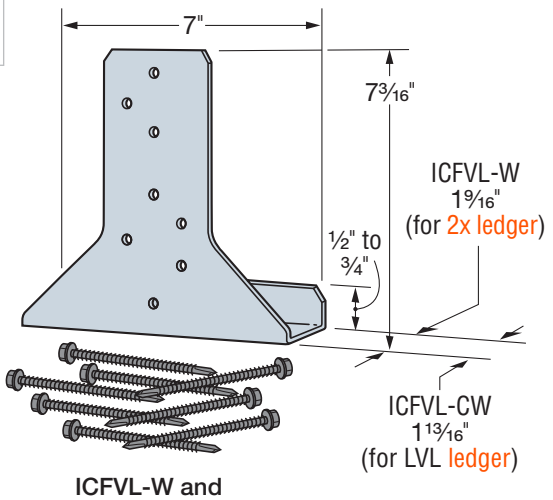

ICFVL-W and ICFVL-CW

Ledger Type	Fasteners	Allowable Loads (lb.)	
		Download (100/115/125)	Lateral F_1 (160)
Wood	(8) ICF-D3.25	1,940	1,905

1. Fasteners for wood ledger (ICF-D3.25) are provided with the part, and fasteners for steel ledger are not provided.
2. Loads apply to ICF foam thicknesses of 3¼" or less.
3. Alternatively, ¼" x ¾" fastener may be used.
4. Tabulated loads may not be increased.
5. Concrete shall have a minimum compressive strength of f'_c = 2,500 psi.
6. When combining downloads and lateral loads, designer shall evaluate as follows: (Design Download / Allowable Download) + (Design Lateral Load / Allowable Lateral Load) ≤ 1.
7. The ICFVL must be installed no closer than 4" to the top of the wall to achieve the allowable loads shown. For installations where the ICFVL is installed less than 4" from the top of the wall (including flush applications), multiply the allowable loads by 0.94.

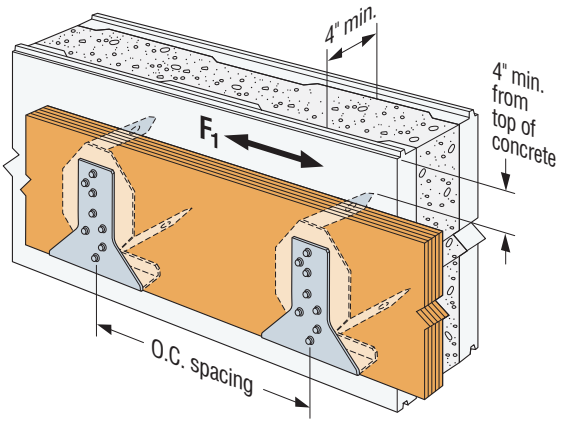

Typical Wood Ledger Installation with ICFVL

C-C-2021 ©2021 SIMPSON STRONG-TIE COMPANY INC.

ICFVL

Ledger Connector System (cont.)

These tables address vertical load applications only.

Ledger Type	Connector Type	ICFVL Spacing To Replace Anchor Bolts (in.)[1,2,3]																Code Ref.
		½"-Diameter Anchors at				⅝"-Diameter Anchors at				(2) ⅝"-Diameter Anchors at				¾"-Diameter Anchors at				
		12" o.c.	24" o.c.	36" o.c.	48" o.c.	12" o.c.	24" o.c.	36" o.c.	48" o.c.	12" o.c.	24" o.c.	36" o.c.	48" o.c.	12" o.c.	24" o.c.	36" o.c.	48" o.c.	
Wood Ledgers																		
DF/SP/SPF	ICFVL w/ ICFVL-W	48	48	48	48	48	48	48	48	24	48	48	48	42	48	48	48	—
LVL	ICFVL w/ ICFVL-CW	48	48	48	48	48	48	48	48	24	48	48	48	42	48	48	48	
Steel Ledgers																		
68 mil (0.068")	ICFVL	11	22	33	44	9	18	27	36	—	—	—	—	—	—	—	—	—
54 mil (0.054")	ICFVL	15	30	45	48	12	24	36	48	—	—	—	—	—	—	—	—	

1. The designer may specify different spacing based on the load requirements.
2. Spacings are based on the perpendicular-to-grain capacity of the bolt in the wood ledger compared to the tested value of the ICFVL. Additional connectors are required for out-of-plane loads.
3. See flier F-C-ICFVL at **strongtie.com** for additional connection details.
4. For steel ledgers, the 68 mil ledger spacing is closer than the 54 mil ledger because the calculated load of a bolt is higher in a thicker piece of steel.
5. Steel ledger values are based on steel. F_u = 60 ksi.
6. Maximum ICF foam thickness is 3¼".

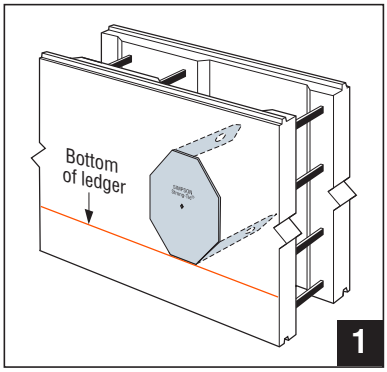

ICFVL

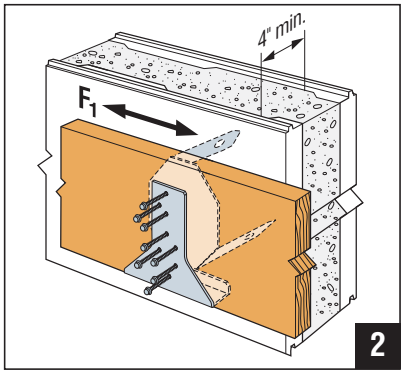

Typical Wood Ledger Installation with ICFVL and ICFVL-W

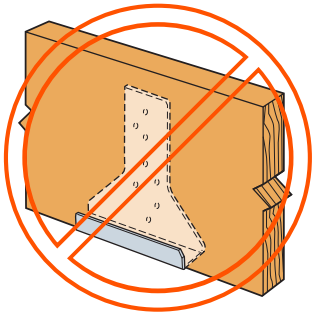

Misinstallation

C-C-2021 ©2021 SIMPSON STRONG-TIE COMPANY INC.

Straps and Ties General Notes

These general notes are provided to ensure proper installation of Simpson Strong-Tie straps and ties.

a. The (160) loads have been increased for wind or earthquake loading, with no further increase allowed. Reduce where other loads govern.

b. When installing strap over wood structural panel sheathing, use 2½"-long nails minimum.

c. SD screws are Simpson Strong-Tie® Strong-Drive® SD Connector screws. See pp. 21–22 for additional fastener information.

d. For straight straps in tension, use half of the fasteners in each member being connected to achieve the listed loads.

e. Tension loads apply for uplift when installed vertically.

f. Field-bending straps is not recommended unless otherwise noted.

g. If wood splitting is a concern, consider spacing the nails at every other location.

h. The cut length of coil strap shall be equal to twice the "end length" noted in the tables plus the clear-span dimension.

i. Straps 16 ga. and heavier can be fillet welded to structural steel members. The designer shall specify the weld size and length. Welding and specification shall be in compliance with the current American Welding Society ANSI/AWS D1.3, Structural Welding Code – Sheet Steel.

Load Adjustment Factors for Optional Fasteners Used with Straight Straps

Connector Table Nail	Replacement Fastener	Allowable Load Adjustment Factor
0.131" x 1½"	#9 x 1½" SD Connector screw	1.00
0.131" x 2½"	0.131" x 1½"	1.00
	#9 x 1½" SD Connector screw	1.00
0.148" x 1½"	#9 x 1½" SD Connector screw	1.00
	0.131" x 1½"	0.83
0.148" x 2½" 0.148" x 3" 0.148" x 3¼"	0.131" x 1½"	0.83
	0.131" x 2½"	0.83
	0.148" x 1¼"	1.00[6]
	0.148" x 1½"	1.00[6]
	0.148" x 2½"	1.00
	0.148" x 3¼"	1.00
	#9 x 1½" SD Connector screw	1.00
	#9 x 2½" SD Connector screw	1.00
0.162" x 2½" 0.162" x 3½"	0.148" x 1½"	0.84[5]
	0.148" x 2½"	0.84
	0.148" x 3"	0.84
	0.148" x 3¼"	0.84
	0.162" x 2½"	1.00[6]
	#10 x 1½" SD Connector screw	1.00
	#10 x 2½" SD Connector screw	1.00

1. Allowable load adjustment factors shown in the table are applicable to all straight straps throughout this catalog, except as noted in the footnotes below.
2. Some products have been tested specifically with alternative fasteners and have allowable load adjustment factors or reduced capacities published on the specific product page. Values published on the product page may be used in lieu of using this table.
3. For straps installed over wood structural panel sheathing, use a 2½"-long fastener minimum.
4. This table does not apply to straps made of steel thicker than 10 ga.
5. Where noted, use 0.80 for 10 ga., 11 ga., and 12 ga. products when using SPF lumber.
6. Where noted, use 0.92 for 10 ga., 11 ga., and 12 ga. products when using SPF lumber.

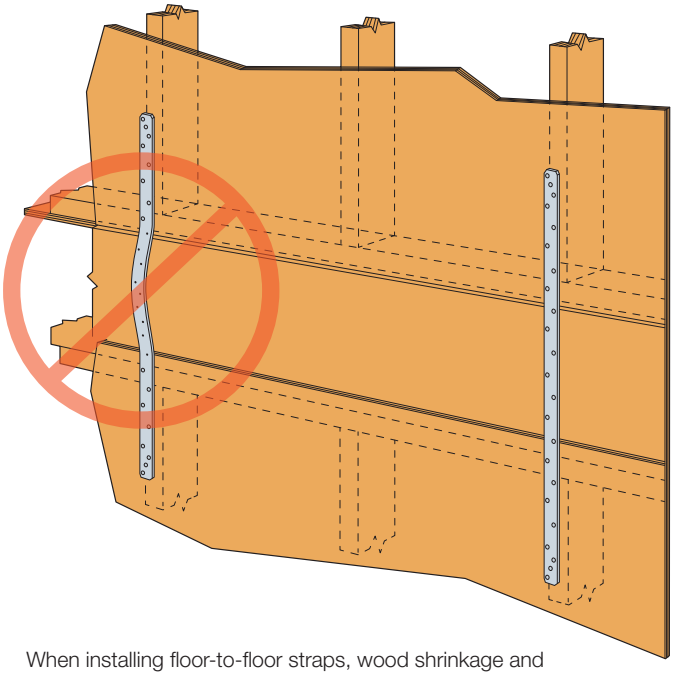

When installing floor-to-floor straps, wood shrinkage and compression that occurs during construction may cause the straps to bow out if both ends of the strap are nailed during initial installation.

To prevent this, filling all fastener holes in the strap (including the rim joist area) will limit the bowing. Alternatively, fill the holes in the top of the strap before the roof is installed and then filling the bottom half of the strap after will also help reduce bowing.

Not Sure How Much Coil Strap You Need?

Simpson Strong-Tie has a web-based app, the **Coil Strap Calculator**, which can help you quickly determine the cut length of each strap and the total amount of coil strap needed for each application on a project.

For more information or to access, go to **strongtie.com/webapps**.

C-C-2021 ©2021 SIMPSON STRONG-TIE COMPANY INC.

Straps and Ties General Notes

Considerations for Hurricane Tie Selection

1. What is the uplift load?
2. What is the parallel-to-plate load?
3. What is the perpendicular-to-plate load?
4. What is the species of wood used for the rafter and the top plates?
   (Select the load table based on the lowest performing species of wood.)
5. Will the hurricane tie be nailed into both top plates or the upper top plate only?
6. What load or loads will the hurricane tie be taking?

Simultaneous Loads

When a connector is loaded simultaneously in more than one direction, the allowable load must be evaluated as option 1 or 2.

Option 1: Unity Equation

For all connectors use the following equation:

Design Uplift / Allowable Uplift + Design Lateral Parallel to Plate / Allowable Lateral Parallel to Plate + Design Lateral Perpendicular to Plate / Allowable Lateral Perpendicular to Plate < 1.0.

The three terms in the unity equation are due to the possible directions that exist to generate force on a connector. The number of terms that must be considered for simultaneous loading is at the sole discretion of the designer and is dependent on their method of calculating wind forces and the utilization of the connector within the structural system.

Option 2: 75% Rule

As an alternative, certain roof-to-wall connectors (embedded truss anchors, pp. 254–255, seismic and hurricane ties, pp. 276–279, and twist straps, p. 283) can be evaluated using the following: The design load in each direction shall not exceed the published allowable load in that direction multiplied by 0.75.

7. Select hurricane tie based on performance, application, installed cost and ease of installation.

Some hurricane ties and twist straps can be installed in pairs to achieve a higher load. Both connectors shall be the same model. Refer to the *High Wind Guide, F-C-HWG, at strongtie.com*.

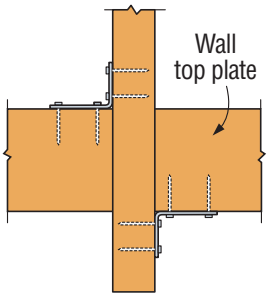

Install diagonally across from each other for minimum 2x truss.

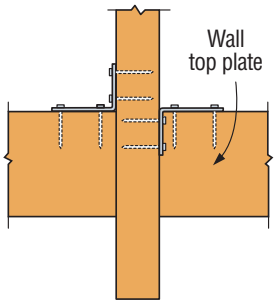

Products can be on the same side of the wall provided they are configured as shown.

Avoid a Misinstallation

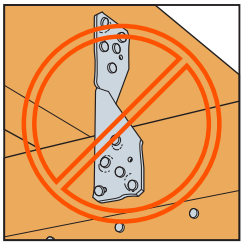

Do not make new holes or overdrive nails.

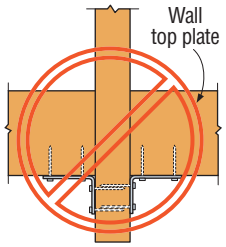

Nailing into both sides of a single 2x truss may cause the wood to split.

C-C-2021 ©2021 SIMPSON STRONG-TIE COMPANY INC.

HRS/ST/HTP/LSTA/LSTI/MST/MSTA/MSTC/MSTI

Strap Ties

Straps are designed to transfer tension loads in a wide variety of applications.

HRS — Heavy strap designed for installation on the edge of 2x members. The HRS416Z installs with Strong-Drive® SDS Heavy-Duty Connector screws.

HTP — Heavy tie plate designed for installation on the side of 2x4 or larger members.

LSTA and MSTA — Designed for use on the edge of 2x members, with a nailing pattern that reduces the potential for splitting.

LSTI and MSTI — Light and medium straps that are suitable where pneumatic-nailing is necessary through diaphragm decking and wood chord open-web trusses.

MST — High-capacity strap that can be installed with either nails or bolts. Suitable for double 2x member connections or greater.

MSTC — High-capacity strap that utilizes a staggered nail pattern to help minimize wood splitting. Nail slots have been countersunk to provide a lower nail head profile.

Finish: Galvanized. Some products are available in stainless steel, ZMAX® coating or black powder coat (add PC to SKU); contact Simpson Strong-Tie. See Corrosion Information, pp. 12–15.

Installation: Use all specified fasteners; see General Notes

Options: Special sizes can be made to order; contact Simpson Strong-Tie

Codes: See p. 11 for Code Reference Key Chart

MSTC and RPS meet code requirements for reinforcing cut members (16 gauge) at top plate and RPS at sill plate.
International Residential Code® — 2012/2015/2018/2021 R602.6.1
International Building Code® — 2012 2308.9.8; 2015/2018/2021 2308.5.8

(For RPS, refer to p. 309. For CTS218 compression and tension strap, see p. 307.)

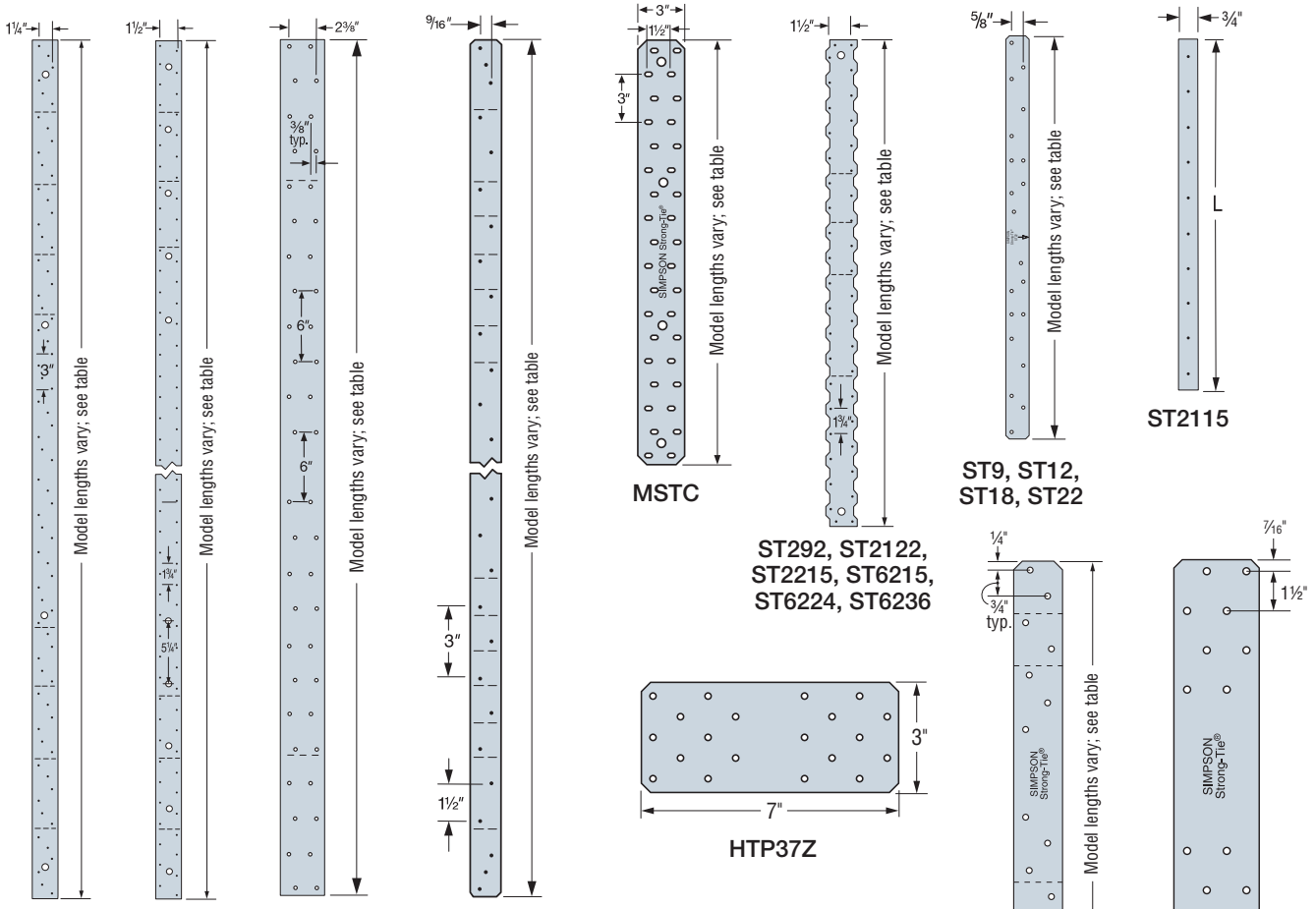

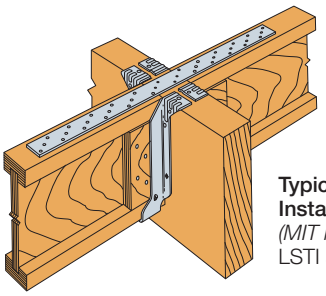

Typical MSTI Installation
(MIT hanger shown)
LSTI similar

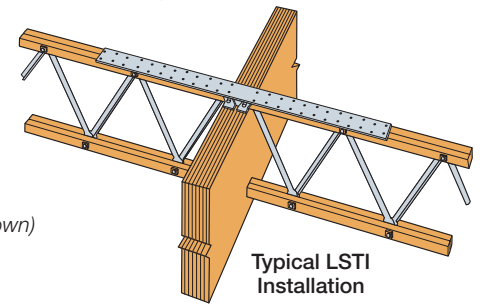

Typical LSTI Installation

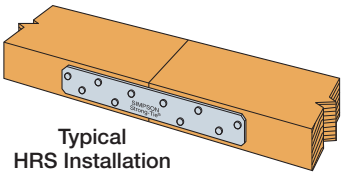

Typical HRS Installation

C-C-2021 ©2021 SIMPSON STRONG-TIE COMPANY INC.

HRS/ST/HTP/LSTA/LSTI/MST/MSTA/MSTC/MSTI

SIMPSON Strong-Tie®

Strap Ties (cont.)

Codes: See p. 11 for Code Reference Key Chart

These products are available with additional corrosion protection. For more information, see p. 14.

SS For stainless-steel fasteners, see p. 21.

SD Many of these products are approved for installation with Strong-Drive® SD Connector screws. See pp. 348–352 for more information.

	Model No.	Ga.	Dimensions (in.) W	Dimensions (in.) L	Fasteners (Total) (in.)	Allowable Tension Loads (DF/SP) (160)	Allowable Tension Loads (SPF/HF) (160)	Code Ref.
	ST2115	20	¾	16 5/16	(10) 0.162 x 2½	660	660	IBC, FL, LA
	LSTA9		1¼	9	(8) 0.148 x 2½	740	635	
	LSTA12		1¼	12	(10) 0.148 x 2½	925	795	
	LSTA15		1¼	15	(12) 0.148 x 2½	1,110	955	
	LSTA18		1¼	18	(14) 0.148 x 2½	1,235	1,115	
	LSTA21		1¼	21	(16) 0.148 x 2½	1,235	1,235	
	LSTA24		1¼	24	(18) 0.148 x 2½	1,235	1,235	
	LSTA30	18	1¼	30	(22) 0.148 x 2½	1,640	1,640	
	LSTA36		1¼	36	(24) 0.148 x 2½	1,640	1,640	
	MSTA9		1¼	9	(8) 0.148 x 2½	750	650	
SS	MSTA12		1¼	12	(10) 0.148 x 2½	940	810	
	MSTA15		1¼	15	(12) 0.148 x 2½	1,130	970	
SS	MSTA18		1¼	18	(14) 0.148 x 2½	1,315	1,135	
	MSTA21		1¼	21	(16) 0.148 x 2½	1,505	1,295	
SS	MSTA24		1¼	24	(18) 0.148 x 2½	1,640	1,460	
	MSTA30	16	1¼	30	(22) 0.148 x 2½	2,050	1,825	
SS	MSTA36		1¼	36	(26) 0.148 x 2½	2,050	2,050	
	MSTA49		1¼	49	(26) 0.148 x 2½	2,020	2,020	
	ST9		1¼	9	(8) 0.162 x 2½	885	765	
	ST12		1¼	11⅝	(10) 0.162 x 2½	1,105	955	
	ST18		1¼	17¾	(14) 0.162 x 2½	1,420	1,335	
	ST22		1¼	21⅝	(18) 0.162 x 2½	1,420	1,420	
	HRS6	12	1⅜	6	(6) 0.148 x 2½	605	530	
	HRS8		1⅜	8	(10) 0.148 x 2½	1,010	880	
	HRS12		1⅜	12	(14) 0.148 x 2½	1,415	1,230	
	ST292	20	2 1/16	9 5/16	(12) 0.162 x 2½	1,260	1,120	
	ST2122		2 1/16	12 13/16	(16) 0.162 x 2½	1,530	1,510	
	ST2215		2 1/16	16 5/16	(20) 0.162 x 2½	1,875	1,875	
	ST6215	16	2 1/16	16 5/16	(20) 0.162 x 2½	2,090	1,910	
	ST6224		2 1/16	23 5/16	(28) 0.162 x 2½	2,535	2,535	
	ST6236	14	2 1/16	33 13/16	(40) 0.162 x 2½	3,845	3,845	
	MSTI26	12	2 1/16	26	(26) 0.148 x 1½	2,745	2,380	
	MSTI36		2 1/16	36	(36) 0.148 x 1½	3,800	3,295	
	MSTI48		2 1/16	48	(48) 0.148 x 1½	5,070	4,390	
	MSTI60		2 1/16	60	(60) 0.148 x 1½	5,070	5,070	
	MSTI72		2 1/16	72	(72) 0.148 x 1½	5,070	5,070	
	HTP37Z	16	3	7	(20) 0.148 x 1½	900	690	
	MSTC28		3	28¼	(36) 0.148 x 3¼	3,460	2,990	
	MSTC40		3	40¼	(52) 0.148 x 3¼	4,735	4,315	
	MSTC52		3	52¼	(62) 0.148 x 3¼	4,735	4,735	
	MSTC66	14	3	65¾	(76) 0.148 x 3¼	5,850	5,850	
	MSTC78		3	77¾	(76) 0.148 x 3¼	5,850	5,850	
	HRS416Z	12	3¼	16	(16) ¼ x 1½ SDS	2,835	2,305	—
	LSTI49	18	3¾	49	(32) 0.148 x 1½	2,970	2,560	IBC, FL, LA
	LSTI73		3¾	73	(48) 0.148 x 1½	4,205	3,840	

1. See pp. 266–267 for Straps and Ties General Notes.
2. **Fasteners:** Nail dimensions are listed diameter by length. SDS screws are Simpson Strong-Tie® Strong-Drive SDS Heavy-Duty Connector screws. See pp. 21–22 for fastener information.

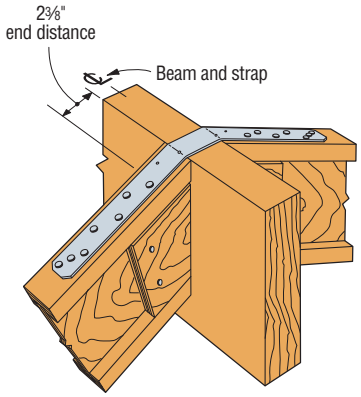

Typical LSTA Installation
(hanger not shown)
Bend strap one time only, max. 12/12 joist pitch.

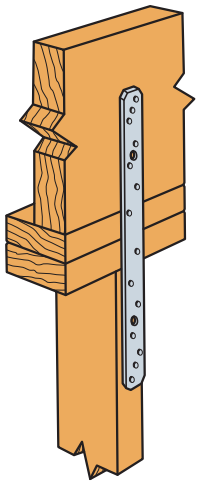

Typical LSTA18 Installation

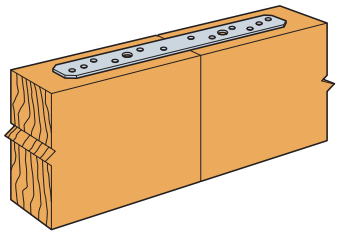

Typical MSTA15 Installation

C-C-2021 ©2021 SIMPSON STRONG-TIE COMPANY INC.

Strap Ties (cont.)

Codes: See p. 11 for Code Reference Key Chart

These products are available with additional corrosion protection. For more information, see p. 14.

SD Many of these products are approved for installation with Strong-Drive® SD Connector screws. See pp. 348–352 for more information.

Floor to Floor Span Table

Model No.	Clear Span (in.)	Fasteners (Total) (in.)	Allowable Tension Loads (DF/SP) (160)	Allowable Tension Loads (SPF/HF) (160)
MSTA49	18	(26) 0.148 x 2½	2,020	2,020
	16	(26) 0.148 x 2½	2,020	2,020
MSTC28	18	(12) 0.148 x 3¼	1,150	995
	16	(16) 0.148 x 3¼	1,535	1,330
MSTC40	24	(20) 0.148 x 3¼	1,920	1,660
	18	(28) 0.148 x 3¼	2,690	2,325
	16	(32) 0.148 x 3¼	3,070	2,655
MSTC52	24	(36) 0.148 x 3¼	3,455	2,990
	18	(44) 0.148 x 3¼	4,225	3,650
	16	(48) 0.148 x 3¼	4,610	3,985
MSTC66	30	(48) 0.148 x 3¼	4,775	4,130
	24	(54) 0.148 x 3¼	5,375	4,645
	18	(64) 0.148 x 3¼	5,850	5,505
	16	(68) 0.148 x 3¼	5,850	5,850
MSTC78	30	(64) 0.148 x 3¼	5,850	5,505
	24	(72) 0.148 x 3¼	5,850	5,850
	18	(76) 0.148 x 3¼	5,850	5,850
MST37	24	(14) 0.162 x 2½	1,720	1,500
	18	(20) 0.162 x 2½	2,460	2,140
	16	(22) 0.162 x 2½	2,705	2,355
MST48	24	(26) 0.162 x 2½	3,210	2,780
	18	(32) 0.162 x 2½	3,950	3,425
	16	(34) 0.162 x 2½	4,200	3,640
MST60	30	(34) 0.162 x 2½	4,605	3,995
	24	(40) 0.162 x 2½	5,240	4,700
	18	(46) 0.162 x 2½	6,235	5,405
MST72	30	(48) 0.162 x 2½	6,505	5,640
	24	(54) 0.162 x 2½	6,730	6,345
	18	(62) 0.162 x 2½	6,730	6,475

See footnotes below.

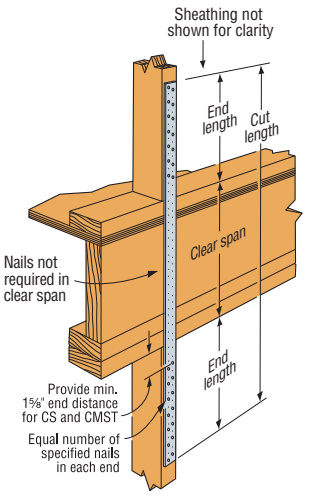

Floor-to-Floor Tie Installation Showing a Clear Span

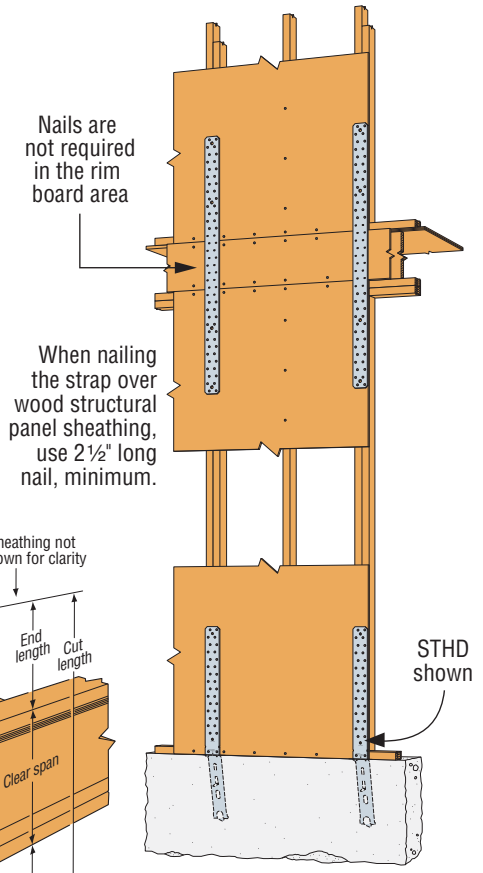

Typical Detail with Strap Installed over Wood Structural Panel Sheathing

Model No.	Ga.	Dimensions (in.) W	Dimensions (in.) L	Fasteners (Total) Nails (in.)	Bolts Qty.	Bolts Dia.	Allowable Tension Loads (DF/SP) Nails (160)	Allowable Tension Loads (DF/SP) Bolts (160)	Allowable Tension Loads (SPF/HF) Nails (160)	Allowable Tension Loads (SPF/HF) Bolts (160)	Code Ref.
MST27	12	2 1/16	27	(30) 0.162 x 2½	4	½	3,700	2,165	3,210	2,000	IBC, FL, LA
MST37		2 1/16	37½	(42) 0.162 x 2½	6	½	5,070	3,030	4,495	2,800	
MST48		2 1/16	48	(50) 0.162 x 2½	8	½	5,310	3,675	5,190	3,395	
MST60	10	2 1/16	60	(68) 0.162 x 2½	10	½	6,730	4,490	6,475	4,150	
MST72		2 1/16	72	(68) 0.162 x 2½	10	½	6,730	4,490	6,475	4,150	

1. See pp. 266–267 for Straps and Ties General Notes.
2. Install bolts or nails as specified by designer. Bolt and nail values may not be combined.
3. Allowable bolt loads are based on parallel-to-grain loading and minimum member thickness: MST – 2½".
4. Splitting may be a problem with installations on lumber smaller than 3½"; either fill every nail hole with 0.148" x 1½" nails or fill every other hole with 0.162" x 2½" nails. Reduce the allowable load based on the size and quantity of fasteners used.
5. **Fasteners:** Nail dimensions are listed diameter by length. See pp. 21–22 for fastener information.

C-C-2021 ©2021 SIMPSON STRONG-TIE COMPANY INC.

PS/PSQ/HST

Strap Ties

PS/PSQ pile straps are ideal for attaching girders to piles, bringing strength to the connection when the wood members are notched. The PSQ installs faster and easier with the patented Strong-Drive® SDWH Timber-Hex HDG screws and offers higher loads. (Screws not included.)

Finish: PS/PSQ — HDG; also available in black powder coat (add PC to sku); contact Simpson Strong-Tie.
HST2 and HST5 — Galvanized
HST3 and HST6 — Simpson Strong-Tie gray paint

Material: See table

Codes: See p. 11 for Code Reference Key Chart

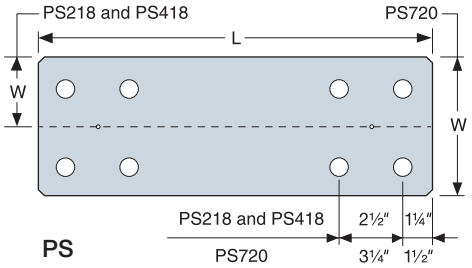

PS

These products are available with additional corrosion protection. For more information, see p. 14.

Model No.	Ga.	Dimensions (in.) W	Dimensions (in.) L	Fasteners (Total)	Allowable Tension Loads (DF/SP) (160)	Allowable Tension Loads (SPF/HF) (160)	Code Ref.
PS218	7	2	18	(4) ¾" MB	1,740	1,385	—
PS418		4	18	(4) ¾" MB	1,740	1,385	
PS720		6¾	20	(8) ½" MB	3,075	2,645	
PSQ218		2	18	(8) SDWH27400G	2,815	2,420	
PSQ418		4	18	(8) SDWH27400G	3,045	2,620	

1. See pp. 266–267 for Straps and Ties General Notes.
2. Posts and beams may consist of multiple members provided they are connected independently of the strap fasteners.
3. PSQ loads are per part (not pair). F_1 loads on DF/SP for PSQ218 and PSQ418 are 750 lb. and 780 lb., respectively. SPF/HF F_1 loads are 645 lb. and 670 lb.
4. PS loads are per part (not pair). Loads are based on perpendicular-to-grain loading in the beam and parallel-to-grain loading in the post and assume a minimum member thickness of 3½". PS straps must be positioned such that bolt end and edge distances meet NDS minimum requirements.
5. **Screws:** SDWH27400G = 0.27"-diameter x 4"-long Strong-Drive SDWH Timber-Hex HDG screw. (Longer SDWH27G screws may be used.)

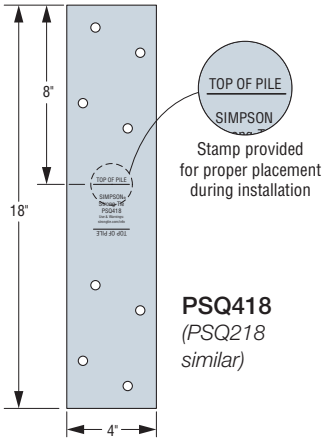

Stamp provided for proper placement during installation

PSQ418
(PSQ218 similar)

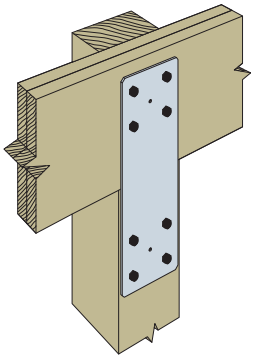

Typical PS720 Installation

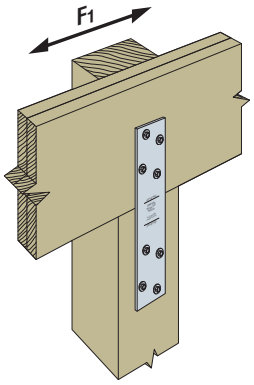

Typical PSQ Installation

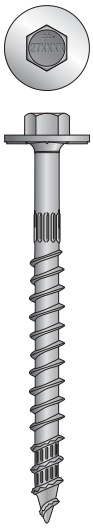

SDWH27400G

Model No.	Ga.	Dimensions (in.) W	Dimensions (in.) L	Fasteners (in.) Nails	Fasteners (in.) Bolts Qty.	Fasteners (in.) Bolts Dia.	Allowable Tension Loads (DF/SP) Bolts (160)	Allowable Tension Loads (SPF/HF) Bolts (160)	Code Ref.
HST2	7	2½	21¼	—	6	⅝	5,220	4,835	IBC, FL, LA
HST5		5	21¼	—	12	⅝	10,650	9,870	
HST3	3	3	25½	—	6	¾	7,650	6,580	
HST6		6	25½	—	12	¾	15,425	13,265	

1. See pp. 266–267 for Straps and Ties General Notes.
2. Allowable bolt loads are based on parallel-to-grain loading and these minimum member thicknesses: HST2 and HST5 – 3½"; HST3 and HST6 – 4½".

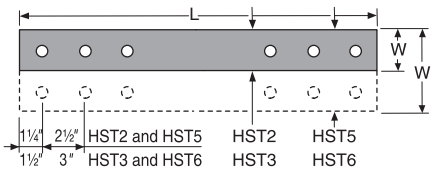

HST

C-C-2021 ©2021 SIMPSON STRONG-TIE COMPANY INC.

CS/CMST/CMSTC/CSHP

Coiled Straps

Coiled straps are continuous utility straps which can be cut to length at the jobsite. The patent-pending CSHP high-performance coil strap features a raised embossment that makes it easy to install with a power framing nailer. This tested feature provides improved performance — resulting in fewer nails, shorter straps and overall lower installed cost. CMSTC provides countersunk nail slots for lower profile when installed with 0.148" x 3¼" sinkers.

Finish: Galvanized. Some products available in ZMAX® coating; see Corrosion Information, pp. 12–15. CS may be ordered in stainless steel (order CS16SS-R).

Material: See table

Installation:

- Use all specified fasteners; see General Notes.
- Wood shrinkage after strap installation across horizontal wood members may cause strap to buckle outward.
- Refer to the applicable code for minimum nail penetration and minimum wood edge and end distances.
- The table shows the maximum allowable loads and the nails required to obtain them. Fewer nails may be used; reduce the allowable load as shown in the table notes or in the Straps and Ties General Notes on pp. 266-267.
- For lap slice and alternate nailing information, refer to p. 274.
- The cut length of the strap shall be equal to twice the "End Length" noted in the table plus the clear span dimension.
- CS/CSHP straps are available in 25' lengths (add -R to model no.).

CSHP:

- The colored dot must be installed facing out.
- Designed to be installed with a power framing nailer using concentric, full round-head nails.

CMST:

- Use every other round hole if the wood tends to split.
- Use round and triangle holes for comparable MST loads, providing wood does not tend to split.

Codes: See p. 11 for Code Reference Key Chart

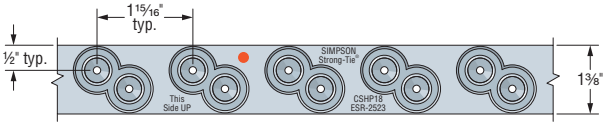

CSHP
US Patent Pending
Colored dots indicate nailing face and strap model.
CSHP18: Orange — CSHP20: Black

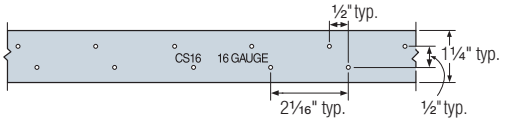

CS16 Hole Pattern
(all other CS straps similar)

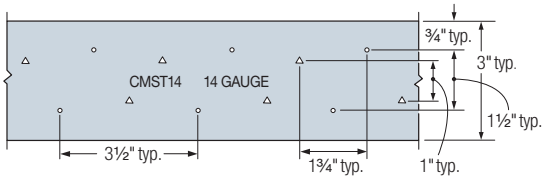

CMST14 Hole Pattern
(CMST12 similar)

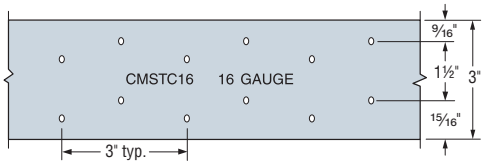

CMSTC16 Hole Pattern

Gauge stamped on part for easy identification

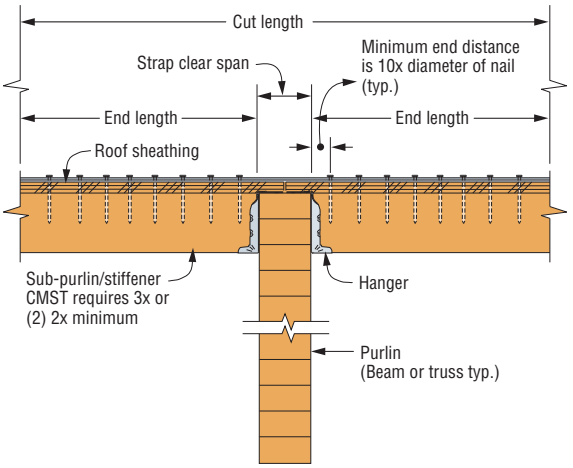

Typical Horizontal CS/CMST/CSHP Installation

Typical CSHP Installation as a Floor-to-Floor Tie
(CS/CMST similar; CMST requires minimum (2) 2x studs)

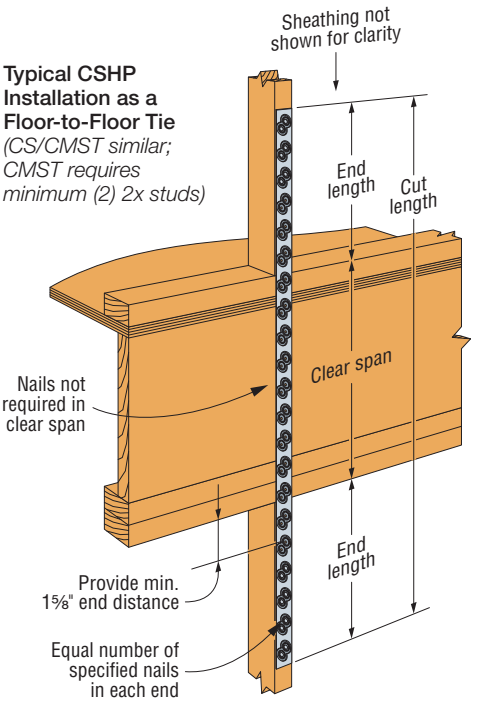

C-C-2021 ©2021 SIMPSON STRONG-TIE COMPANY INC.

CS/CMST/CMSTC/CSHP

Coiled Straps (cont.)

These products are available with additional corrosion protection. For more information, see p. 14.

SS For stainless-steel fasteners, see p. 21.

SD Many of these products are approved for installation with Strong-Drive® SD Connector screws. See pp. 348–352 for more information.

Model No.	Total L	Ga.	DF/SP		SPF/HF		Allowable Tension Loads (160)	Code Ref.
			Fasteners (in.)	End Length (in.)	Fasteners (in.)	End Length (in.)		
CMST12	40'	12	(74) 0.162 x 2½	33	(84) 0.162 x 2½	38	9,215	IBC, FL, LA
			(86) 0.148 x 2½	39	(98) 0.148 x 2½	44	9,215	
CMST14	52½'	14	(56) 0.162 x 2½	26	(66) 0.162 x 2½	30	6,475	
			(66) 0.148 x 2½	30	(76) 0.148 x 2½	34	6,475	
CMSTC16	54'	16	(50) 0.148 x 3¼	20	(58) 0.148 x 3¼	25	4,690	
CS14	100'	14	(26) 0.148 x 2½	15	(30) 0.148 x 2½	16	2,490	
			(30) 0.131 x 2½	16	(36) 0.131 x 2½	19	2,490	
SS CS16	150'	16	(20) 0.148 x 2½	11	(22) 0.148 x 2½	13	1,705	
			(22) 0.131 x 2½	13	(26) 0.131 x 2½	15	1,705	
CS20	250'	20	(12) 0.148 x 2½	7	(14) 0.148 x 2½	9	1,030	
			(14) 0.131 x 2½	9	(16) 0.131 x 2½	9	1,030	
CSHP18	75'	18	(14) 0.148 x 2½	9	(16) 0.148 x 2½	10	1,540	
			(16) 0.131 x 2½	10	(18) 0.131 x 2½	11	1,540	
CSHP20	75'	20	(12) 0.148 x 2½	8	(12) 0.148 x 2½	8	1,160	
			(12) 0.131 x 2½	8	(14) 0.131 x 2½	9	1,160	

1. See pp. 266–267 for Straps and Ties General Notes.
2. Calculate the connector value for a reduced number of nails as follows:

$$\text{Allowable Load} = \frac{\text{No. of Nails Used}}{\text{No. of Nails in Table}} \times \text{Table Load}$$

Example: CMSTC16 in DF/SP with 40 nails total.
(Half of the nails in each member being connected)

$$\text{Allowable Load} = \frac{\text{40 Nails (Used)}}{\text{50 Nails (Table)}} \times \text{4,690 lb.} = \text{3,752 lb.}$$

3. See p. 274 for alternate nailing and lap splice information.
4. **Fasteners:** Nail dimensions are listed diameter by length. See pp. 21–22 for fastener information.

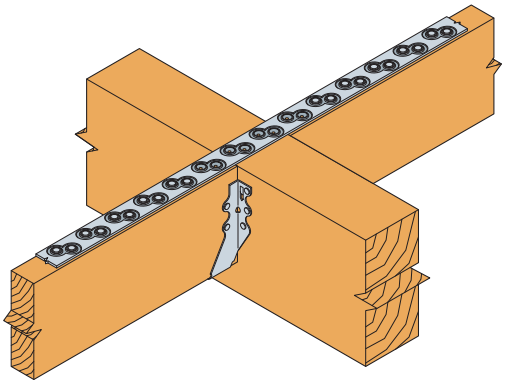

Typical CSHP Installation
(CS/CMST similar)

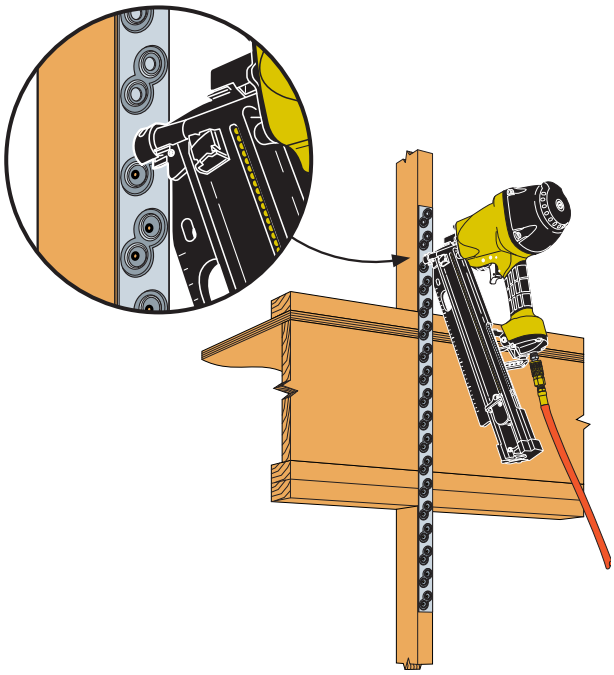

Typical CSHP Installation

C-C-2021 ©2021 SIMPSON STRONG-TIE COMPANY INC.

CS/CMST/CMSTC/CSHP

Coiled Straps (cont.)

Lap splicing of coiled straps can be used to extend standard strap lengths for designing continuous drag elements and diaphragm chord members. The Strap Lap Splices table provides the minimum splice length (L_{SP}) and fasteners, within the splice length, to achieve the highest allowable capacity of the strap.

The Allowable Loads for Alternative Nailing table provides information for coiled straps when installed with different nailing schedules. The highest allowable load given for each model is limited by the steel capacity.

The Engineer/Designer of Record must evaluate and determine the adequacy of the coiled strap's lap splice and alternative nailing applications to meet their design loads.

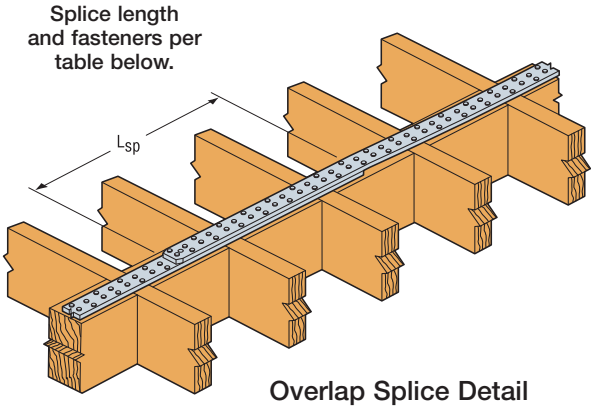

Overlap Splice Detail

Strap Lap Splices

Model No.	Ga.	Strap Lap Splice	
		Minimum Fasteners per Splice	Min. Splice Length, L_{sp} (in.)
CMST12	12	(18) 0.162 x 2½	18
		(22) 0.148 x 2½	21
CMST14	14	(13) 0.162 x 2½	14
		(15) 0.148 x 2½	15
CMSTC16	16	(11) 0.162 x 2½	10
		(11) 0.148 x 2½	10
CS14	14	(6) 0.148 x 2½	9
		(7) 0.131 x 2½	10
CS16	16	(5) 0.148 x 2½	8
		(6) 0.131 x 2½	9
CS20	20	(5) 0.148 x 2½	8
		(5) 0.131 x 2½	8
CSHP18	18	(7) 0.148 x 2½	9
		(7) 0.131 x 2½	9
CSHP20	20	(6) 0.148 x 2½	8
		(7) 0.131 x 2½	9

1. See pp. 266–267 for Straps and Ties General Notes.
2. 0.148" x 2½" nails can be replaced by 0.148" x 3¼" nails. No other nail substitution is allowed for lap splices.
3. Refer to the applicable code for minimum edge distance and minimum end distance.
4. No strap modification is allowed and the splice must meet both the minimum number of fasteners and the minimum splice length.

Allowable Loads for Alternative Nailing

Model No.	Ga.	Total Coil Length (ft.)	Fasteners (in.)	DF/SP Allowable Tension Loads	End Length (in.)	
				(160)	Nail Installed in Every Hole	Nail Installed in Every Other Hole
CMST12	12	40	(66) 0.162 x 2½	8,415	30	58
			(58) 0.162 x 2½	7,395	27	51
			(50) 0.162 x 2½	6,375	23	44
			(76) 0.148 x 2½	8,320	35	66
			(68) 0.148 x 2½	7,445	31	59
			(60) 0.148 x 2½	6,570	28	52
CMST14	14	52.5	(48) 0.162 x 2½	5,615	22	42
			(40) 0.162 x 2½	4,680	19	35
			(32) 0.162 x 2½	3,745	15	28
			(58) 0.148 x 2½	5,770	27	51
			(50) 0.148 x 2½	4,975	23	44
			(42) 0.148 x 2½	4,180	20	37
CMSTC16	16	54	(42) 0.162 x 2½	4,690	17	32
			(34) 0.162 x 2½	3,875	14	26
			(26) 0.162 x 2½	2,965	11	20
			(18) 0.162 x 2½	2,050	8	14
			(48) 0.148 x 2½	4,610	19	35
			(40) 0.148 x 2½	3,840	16	29
			(32) 0.148 x 2½	3,070	13	23
			(24) 0.148 x 2½	2,305	10	17
			(16) 0.148 x 2½	1,535	7	11
CS14	14	100	(24) 0.148 x 2½	2,390	13	23
			(22) 0.148 x 2½	2,190	13	22
			(28) 0.131 x 2½	2,340	15	27
			(26) 0.131 x 2½	2,170	15	27
CS16	16	150	(18) 0.148 x 2½	1,700	11	18
			(16) 0.148 x 2½	1,510	9	15
			(20) 0.131 x 2½	1,570	11	19
			(18) 0.131 x 2½	1,415	11	18
CS20	20	250	(10) 0.148 x 2½	915	6	10
			(12) 0.131 x 2½	910	7	11
CSHP18	18	75	(12) 0.148 x 2½	1,440	8	14
			(10) 0.148 x 2½	1,200	8	12
			(14) 0.131 x 2½	1,445	9	16
			(12) 0.131 x 2½	1,240	8	14
CSHP20	20	75	(10) 0.148 x 2½	1,150	8	12
			(8) 0.148 x 2½	920	6	10
			(10) 0.131 x 2½	985	8	12
			(8) 0.131 x 2½	790	6	10

1. See pp. 266–267 for Straps and Ties General Notes.
2. **Fasteners:** Nail dimensions are listed diameter by length. See pp. 21–22 for fastener information.

C-C-2021 ©2021 SIMPSON STRONG-TIE COMPANY INC.

MSTC48B3/MSTC66B3Z

Pre-Bent Straps

The MSTC48B3 and MSTC66B3Z are pre-bent straps designed to transfer tension load from an upper-story shearwall to a beam on the story below.

Material: 14 gauge

Finish: Galvanized. Some products available in ZMAX® coating; see Corrosion Information, pp. 12–15.

Codes: See p. 11 for Code Reference Key Chart

These products are available with additional corrosion protection. For more information, see p. 14.

Model No.	Min. Wood Beam Dimension (in.)		Fasteners (in.)			Allowable Tension Loads		Code Ref.
			Beam		Studs/ Post			
	Width (min.)	Depth (min.)	Face	Bottom		DF/SP (160)	SPF/HF (160)	
MSTC48B3	3	9¼	(12) 0.148 x 3	(4) 0.148 x 3	(38) 0.148 x 3	3,975	3,900	IBC, FL, LA
MSTC66B3Z	3½	11¼	(14) 0.148 x 3			4,490	4,490	

1. Using fewer than 38 nails in the studs/post will reduce the allowable load of the connection. To calculate a reduced allowable load, use 199 lb. per nail for DF/SP or 172 lb. per nail for HF/SPF. Minimum length of extent of reduced nails may not be less than 21" as is shown in graphic.
2. Nails in studs/post shall be installed symmetrically. Nails may be installed over the entire length of the strap in the studs/post.
3. The minimum 3"-wide beam may be made up of two 2x members.
4. MSTC48B3 and MSTC66B3Z installed over wood structural panel sheathing up to ½" thick achieve 0.85 of table loads.
5. PSL beam may be used in lieu of a standard-dimension lumber beam with no load reductions.
6. Multiply allowable loads by 1.85 to attain an allowable load for installations where two straps have been installed with a 1½" clear space between straps.
7. Structural composite lumber columns have sides that show either the wide face or the edges of the lumber strands/veneers known as the narrow face. Values in the tables reflect installation into the wide face. See technical bulletin T-C-SCLCLM at **strongtie.com** for load reductions resulting from narrow-face installations.
8. **Fasteners:** Nail dimensions are listed diameter by length. See pp. 21–22 for fastener information.

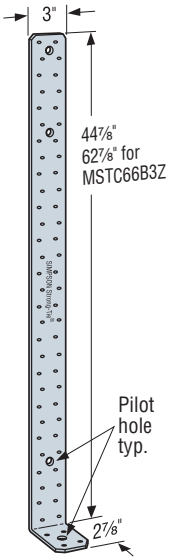

MSTC48B3

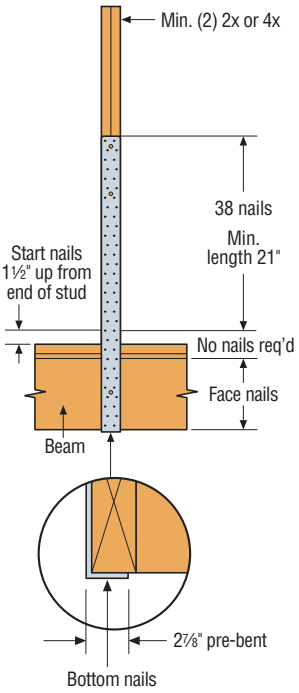

MSTC48B3 Installation with No Rim Board

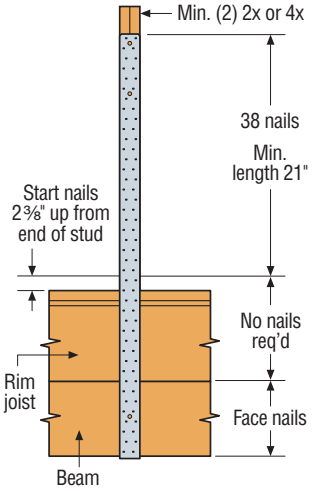

MSTC66B3Z Installation with Rim Board

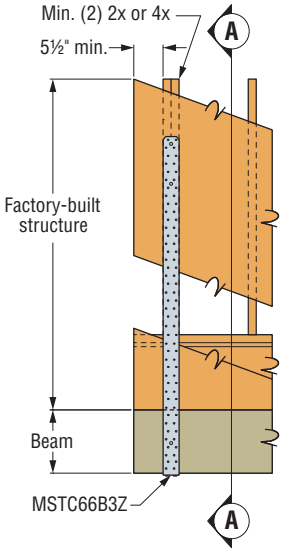

MSTC66B3Z Installation

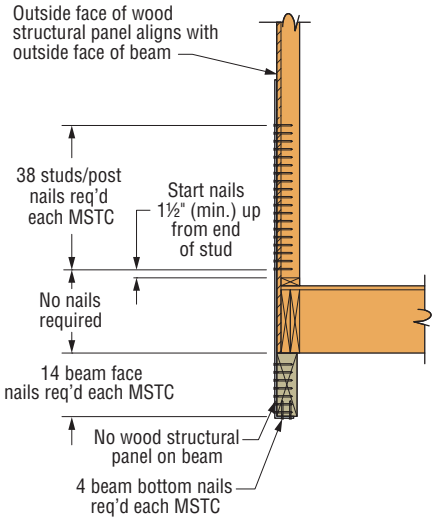

Section A-A

C-C-2021 ©2021 SIMPSON STRONG-TIE COMPANY INC.

Seismic and Hurricane Ties

Simpson Strong-Tie hurricane ties provide a positive connection between truss/rafter and the wall of the structure to resist wind and seismic forces.

Material: See table

Finish: Galvanized. H1.81Z, H7Z and H11Z — ZMAX® coating. Some models available in stainless steel or ZMAX; see Corrosion Information, pp. 12–15 or visit **strongtie.com**.

Installation:

- Use all specified fasteners; see General Notes.
- Hurricane ties can be installed with flanges facing inward or outward.
- H2.5T, H3 and H6 ties are shipped in equal quantities of right and left versions (right versions shown).
- Hurricane ties do not replace solid blocking.
- When installing ties on plated trusses (on the side opposite the truss plate) do not fasten through the truss plate from behind. This can force the truss plate off of the truss and compromise truss performance.
- H10A optional nailing to connect shear blocking, use 0.131" x 2½" nails. Slots allow maximum field bending up to a pitch of 6:12, use H10A sloped loads for field-bent installation.

Codes: See p. 11 for Code Reference Key Chart

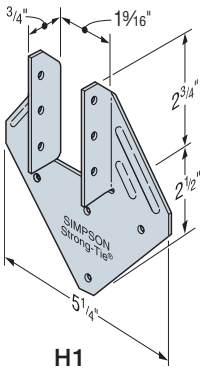

H1
(H1.81Z similar)

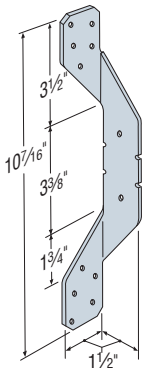

H2A
(H2ASS similar)

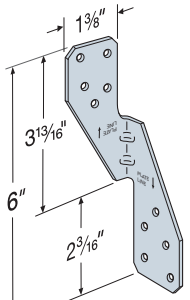

H2.5A
(H2.5ASS similar)

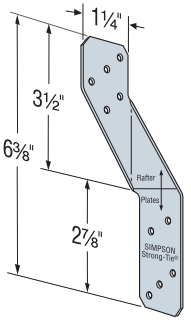

H2.5T

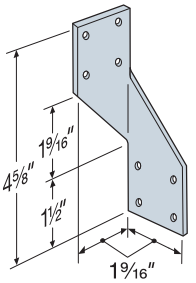

H3
(H3SS similar)

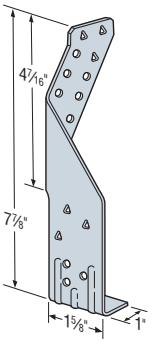

TSP

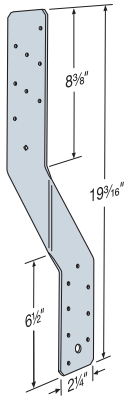

H6

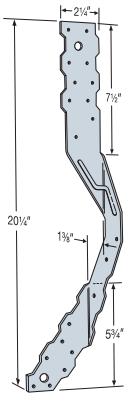

H7Z

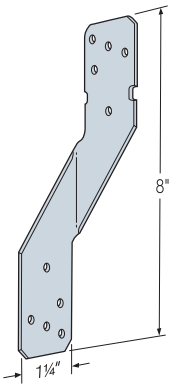

H8
(H8SS similar)

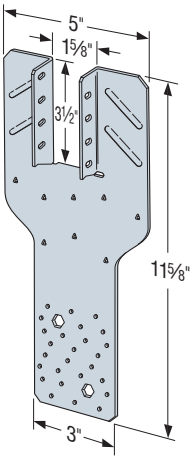

H10S

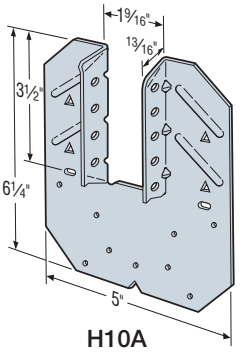

H10A
(H10ASS similar)

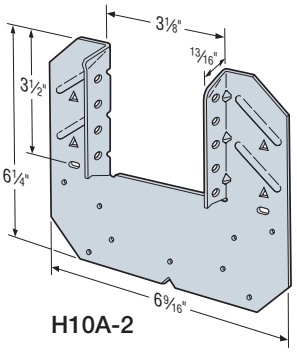

H10A-2

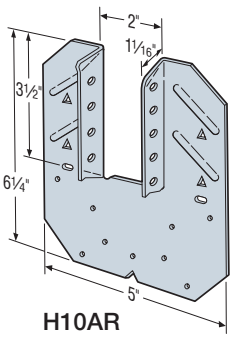

H10AR

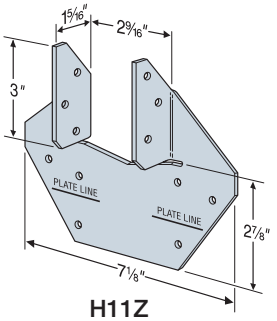

H11Z

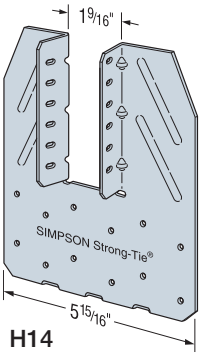

H14

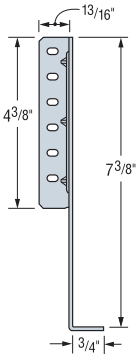

H14 Profile

C-C-2021 ©2021 SIMPSON STRONG-TIE COMPANY INC.

Seismic and Hurricane Ties (cont.)

These products are available with additional corrosion protection. For more information, see p. 14.

SS For stainless-steel fasteners, see p. 21.

SD Many of these products are approved for installation with Strong-Drive® SD Connector screws. See pp. 348–352 for more information.

Model No.	Ga.	Fasteners (in.)			DF/SP Allowable Loads			Uplift with 0.131" x 1½" Nails (160)	SPF/HF Allowable Loads			Uplift with 0.131" x 1½" Nails (160)	Code Ref.
		To Rafters/Truss	To Plates	To Studs	Uplift (160)	Lateral (160) F_1	Lateral (160) F_2		Uplift (160)	Lateral (160) F_1	Lateral (160) F_2		
H1	18	(6) 0.131 x 1½	(4) 0.131 x 2½	—	480	510	190	455	425	440	165	370	IBC, FL, LA
H1.81Z	18	(6) 0.131 x 1½	(4) 0.131 x 2½	—	540	440	170	460	465	380	130	395	—
H2A	18	(5) 0.131 x 1½	(2) 0.131 x 1½	(5) 0.131 x 1½	525	130	55	—	495	130	55	—	IBC, FL, LA
SS H2ASS	18	(5) 0.131 x 1½	(2) 0.131 x 1½	(5) 0.131 x 1½	400	130	55	400	345	130	55	345	—
H2.5A	18	(5) 0.131 x 2½	(5) 0.131 x 2½	—	700	110	110	625	615	110	110	540	IBC, FL, LA
SS H2.5ASS	18	(5) 0.131 x 2½	(5) 0.131 x 2½	—	440	75	70	365	380	75	70	310	—
H2.5T	18	(5) 0.131 x 2½	(5) 0.131 x 2½	—	590	135	145	480	565	135	145	475	IBC, FL, LA
H3	18	(4) 0.131 x 2½	(4) 0.131 x 2½	—	400	210	170	400	365	180	145	290	
SS H3SS	18	(4) 0.131 x 2½	(4) 0.131 x 2½	—	280	145	120	275	225	100	85	210	—
H6	16	—	(8) 0.131 x 2½	(8) 0.131 x 2½	1,230	—	—	—	1,065	—	—	—	IBC, FL, LA
H7Z	16	(4) 0.131 x 2½	(2) 0.131 x 1½	(8) 0.131 x 2½	830	410	—	—	715	355	—	—	
H8	18	(5) 0.148 x 1½	(5) 0.148 x 1½	—	780	95	90	630	710	95	90	510	
SS H8SS	18	(5) 0.148 x 1½	(5) 0.148 x 1½	—	610	90	120	440	370	90	55	335	—
H10A Field Bent	18	(9) 0.148 x 1½	(9) 0.148 x 1½	—	780	590	285	—	760	505	285	—	IBC, FL, LA
H10A	18	(9) 0.148 x 1½	(9) 0.148 x 1½	—	1,040	565	285	—	1,015	485	285	—	
SS H10ASS	18	(9) 0.148 x 1½	(9) 0.148 x 1½	—	970	565	170	—	835	485	170	—	—
H10AR	18	(9) 0.148 x 1½	(9) 0.148 x 1½	—	1,050	490	285	—	905	420	285	—	
H10S	18	(8) 0.131 x 1½	(8) 0.131 x 1½	(8) 0.131 x 2½	910	660	215	550	785	570	185	475	IBC, FL, LA
H10A-2	18	(9) 0.148 x 1½	(9) 0.148 x 1½	—	1,080	680	260	—	930	585	225	—	
H11Z	18	(6) 0.162 x 2½	(6) 0.162 x 2½	—	830	525	760	—	715	450	655	—	—
H14	18	(12) 0.131 x 1½	(13) 0.131 x 2½	—	1,275	725	285	—	1,050	480	245	—	IBC, FL, LA
		(12) 0.131 x 1½	(15) 0.131 x 2½	—	1,340	670	230	—	1,050	480	245	—	
TSP	16	(9) 0.148 x 1½	(6) 0.148 x 1½	—	755	310	190	—	650	265	160	—	
		(9) 0.148 x 1½	(6) 0.148 x 3	—	1,015	310	190	—	875	265	160	—	

1. See pp. 266–267 for Straps and Ties General Notes.
2. Allowable loads are for one anchor. A minimum rafter thickness of 2½" must be used when framing anchors are used on each side of the joist and on the same side of the plate (exception: connectors installed such that nails on opposite side don't interfere).
3. Allowable DF/SP uplift load for stud-to-bottom plate installation (see detail 12) is 390 lb. (H2.5A); 265 lb. (H2.5ASS); and 310 lb. (H8). For SPF/HF values, multiply these values by 0.86.
4. Allowable loads in the F_1 direction are not intended to replace diaphragm boundary members and do not account for possible cross-grain bending of the truss or rafter members.
5. When cross-grain bending or cross-grain tension cannot be avoided in the members, mechanical reinforcement to resist such forces shall be considered by the designer.
6. Hurricane ties are shown installed on the outside of the wall for clarity and assume a minimum overhang of 3½". Installation on the inside of the wall is acceptable. For uplift Continuous Load Path, connections in the same area (i.e., truss-to-plate connector and plate-to-stud connector) must be on same side of the wall.
7. Southern pine allowable uplift loads for H10A = 1,105 lb. (160), H2.5A with 0.131" x 1½" nails = 635 lb. (160) and H2.5A with 0.131" x 2½" nails = 730 lb. (160).
8. Refer to Simpson Strong-Tie® technical bulletin T-C-HTIEBEAR at **strongtie.com** for allowable bearing enhancement loads.
9. H10S can have the stud offset a maximum of 1" from the rafter (center to center) for a reduced uplift of 890 lb. (DF/SP) and 765 lb. (SPF).
10. H10S nails to plates are optional for uplift but required for lateral loads.
11. Some load values for the stainless-steel connectors shown here are lower than those for the carbon-steel versions. Ongoing test programs have shown this also to be the case with other stainless-steel connectors in the product line that are installed with nails. Visit **strongtie.com/corrosion** for updated information.
12. The allowable loads of stainless-steel connectors match carbon-steel connectors when installed with stainless-steel Strong-Drive® SCNR Ring-Shank Connector nails. For more information, refer to engineering letter L-F-SSNAILS at **strongtie.com**.
13. Simpson Strong-Tie offers stainless-steel Strong-Drive SCNR Ring-Shank Connector nails. For bulk SCNR nails, see p. 345; for collated SCNR nails, see p. 346. For general fastener information, see pp. 21–22.
14. Allowable DF/SP/SPF uplift load for the H2.5A fastened to a 2x4 truss bottom chord and double top plates using five 0.131" x 1½" nails in the top plates and three 0.131" x 1½" nails in the lowest three flange holes into the truss bottom chord is 260 lb. (160).
15. For TSP installed stud to single plate see pp. 280–281.
16. For simultaneous loads in more than one direction, the connector must be evaluated using either the Unity Equation or the 75% Rule, as described in Straps and Ties General Notes on p. 267.
17. **Fasteners:** Nail dimensions are listed diameter by length. See pp. 21–22 for fastener information.

C-C-2021 ©2021 SIMPSON STRONG-TIE COMPANY INC.

Seismic and Hurricane Ties (cont.)

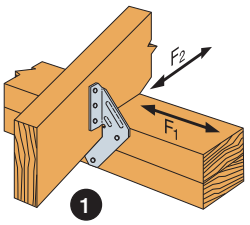

1 H1 Installation
(H1.81Z similar)

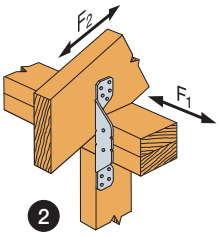

2 H2A Installation

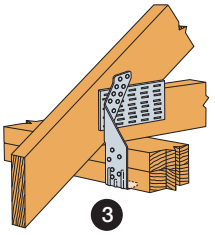

3 TSP Installation

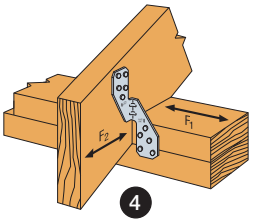

4 H2.5A Installation
(nails into both top plates)

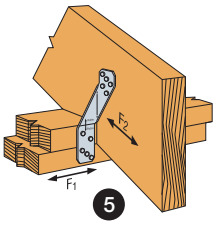

5 H2.5T Installation
(nails into both top plates)

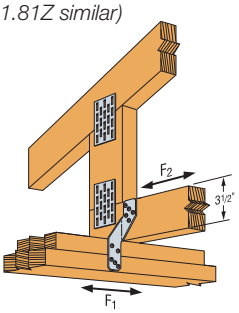

6 H2.5T Installation

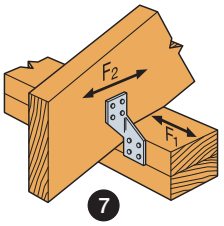

7 H3 Installation
(nails into upper top plate)

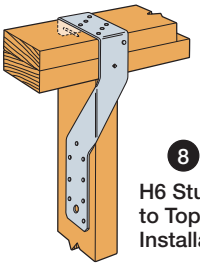

8 H6 Stud to Top Plate Installation

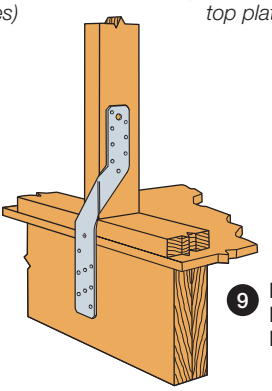

9 H6 Stud to Rim Board Installation

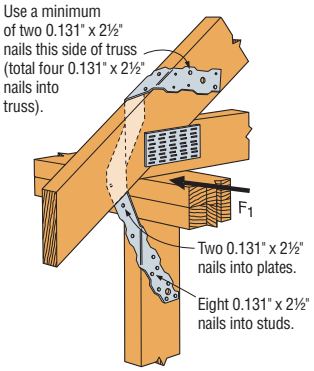

10 H7Z Installation

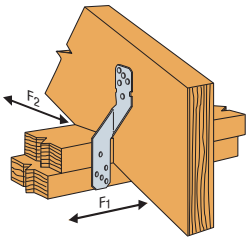

11 H8 Attaching Rafter to Double Top Plates

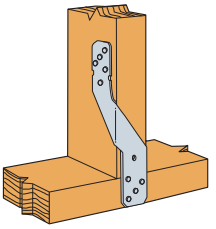

12 H8 attaching Stud to Sill
((4) 0.131" x 2½" nails into plate, (5) 0.131" x 2½" nails into stud, refer to footnote 3 for loads)

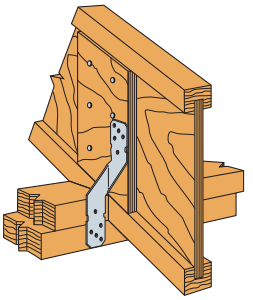

13 H8 attaching I-Joist to Double Top Plates

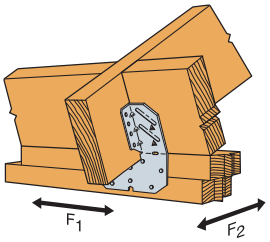

14 H10A Field-Bent Installation

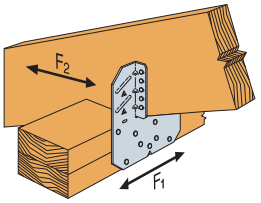

15 H10A Installation

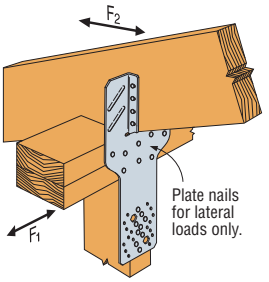

16 H10S Installation

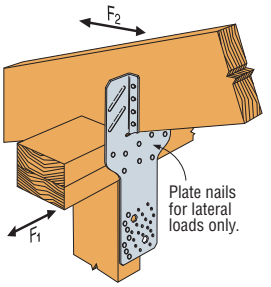

17 H10S Installation with Stud Offset

H10A optional nailing connects shear blocking to rafter. Use 0.131" x 2½" nails. Slot allows maximum field-bending up to a pitch of 6/12, use 75% of the table uplift load; bend one time only.

1

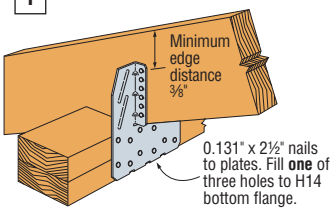

18 H14 Installation to Double Top Plates

2

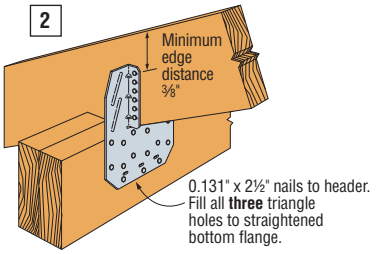

19 H14 Installation to Double 2x Header

C-C-2021 ©2021 SIMPSON STRONG-TIE COMPANY INC.

Seismic and Hurricane Ties

The hurricane tie series features various configurations of wind and seismic ties for trusses and rafters. The H16 series has a presloped seat of 5/12 for double trusses.

The presloped 5/12 seat of the H16 provides for a tight fit and reduced deflection. The strap length provides for various truss heel heights ranging from 13½" maximum to 4" minimum.

The HGA10 attaches to gable trusses and provides good lateral wind resistance. The HS24 attaches the bottom chord of a truss or rafter at pitches from 0/12 to 4/12 to double 2x4 top plates. Double-shear nailing allows for higher lateral resistance.

Material: See table

Finish: Galvanized; HGA also available in HDG; see Corrosion Information, pp. 12–15

Installation:

- Use all specified fasteners; see General Notes.
- HGA10KT: sold as a kit with (10) HGA10 connectors and (40) ¼" x 1½" Strong-Drive® SDS Heavy-Duty Connector screws and (40) ¼" x 3" SDS screws. Additional screws sold separately to install with all ¼" x 1½" SDS screws (SDS25112).
- HS24 requires slant nailing only when bottom chord of truss or rafter has no slope.

Codes: See p. 11 for Code Reference Key Chart

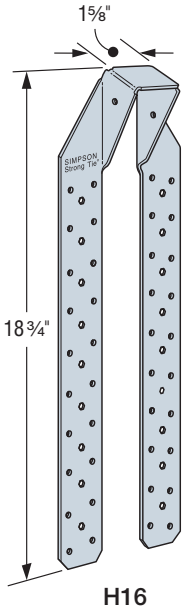

H16
Presloped at 5/12.
Pitch of 3/12 to 7/12 is acceptable.

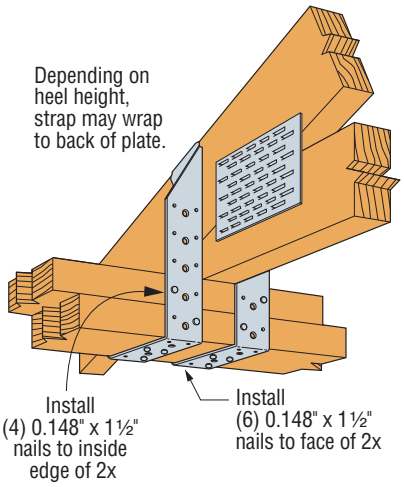

H16 Installation

These products are available with additional corrosion protection. For more information, see p. 14.

Model No.	Ga.	Fasteners (in.)		DF/SP Allowable Loads				SPF/HF Allowable Loads				Code Ref.
		To Rafters/Truss	To Plates	Uplift (160)	Lateral (160)			Uplift (160)	Lateral (160)			
					F_1	F_2	F_3		F_1	F_2	F_3	
HGA10KT	14	(4) ¼ x 1½ SDS	(4) ¼ x 3 SDS	650	1,165	940	815	500	840	675	495	IBC, FL, LA
			(4) ¼ x 1½ SDS	605	500	720	—	435	360	520	—	
HS24	18	(8) 0.131 x 1½ and (2) 0.131 x 2½ slant	(8) 0.131 x 2½	605	645	1,100	—	520	555	945	—	
H16	18	(2) 0.148 x 1½	(10) 0.148 x 1½	1,370	—	—	—	1,180	—	—	—	

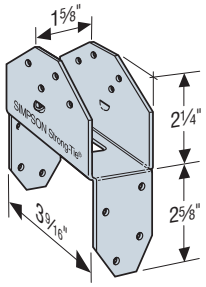

HS24

1. See pp. 266–267 for Straps and Ties General Notes.
2. When cross-grain bending or cross-grain tension cannot be avoided in the members, mechanical reinforcement to resist such forces shall be considered by the Designer.
3. HS24 DF/SP allowable loads without slant nailing are 605 lb. (uplift), 590 lb. (F_1), 640 lb. (F_2). For SPF/HF loads multiply these values by 0.86.
4. Allowable loads in the F_1 direction are not intended to replace diaphragm boundary members or prevent cross-grain bending of the truss or rafter members. Additional shear transfer elements shall be considered where there may be effects of cross-grain bending or tension.
5. **Fasteners:** Nail dimensions in the table are diameter by length. SDS screws are Simpson Strong-Tie® Strong-Drive® SDS Heavy-Duty Connector screws. See pp. 21–22 for fastener information.

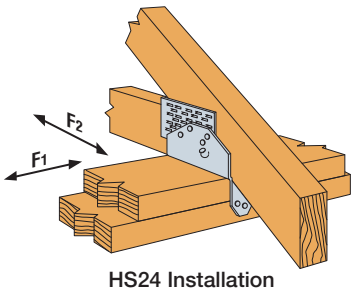

HS24 Installation

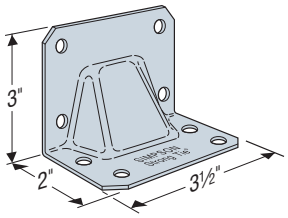

HGA10

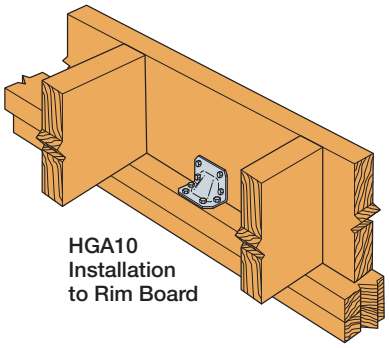

HGA10 Installation to Rim Board

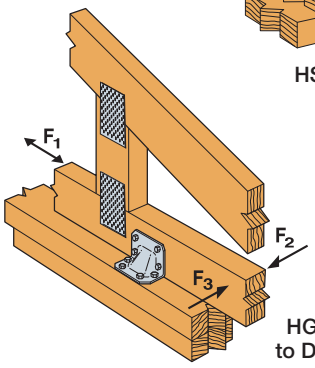

HGA10 Installation to Double Top Plates

C-C-2021 ©2021 SIMPSON STRONG-TIE COMPANY INC.

DSP/SSP/SP/SPH/RSP4/TSP/CS

Stud Plate Ties

This product is preferable to similar connectors because of (a) easier installation, (b) higher loads, (c) lower installed cost, or a combination of these features.

The stud plate tie series offers general solutions for connecting the stud to the top and bottom plates. All models can be used to make a connection to either the top or bottom plate, and several are suitable for double top plates and studs.

Material: DSP/SSP/SPH — 18 gauge; TSP/CS16 — 16 gauge; all others — 20 gauge

Finish: Galvanized. Some products available in ZMAX® coating. See Corrosion Information, pp. 12–15.

Installation:

- Use all specified fasteners; see General Notes
- TSP/DSP/SSP — Sill-plate installation: fill all round holes
- TSP/DSP/SSP — Top-plate installation: fill all round and triangle holes
- SP1/SP2 — One of the 0.148" x 3" stud nails is driven at a 45° angle through the stud into the plate
- CS — Slide the CS16 or CS20 strap underneath the mudsill with the appropriate length of strap protruding from the inside of the mudsill. See illustration on p. 281 for more details.
  - Each bend in the strap must be tight, and the strap must sit flush against the edge of the mudsill and the stud or sheathing
  - Bend strap one time only

Codes: See p. 11 for Code Reference Key Chart

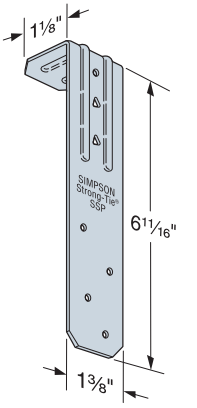

SSP
US Patents 7,065,932 and 7,356,973

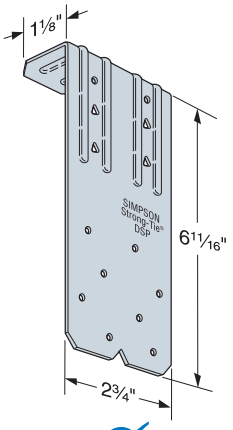

DSP
US Patents 7,065,932 and 7,356,973

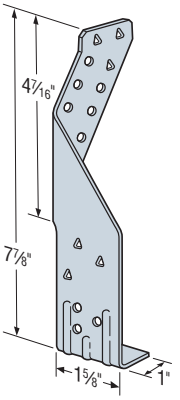

TSP
US Patent D618,085

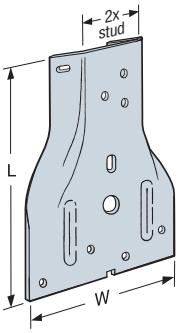

SP1

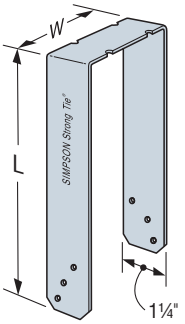

SP4
(SPH similar)

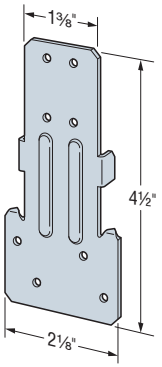

RSP4

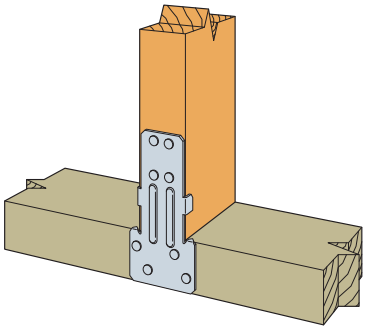

(1) Typical RSP4 Stud to Single Bottom Plate

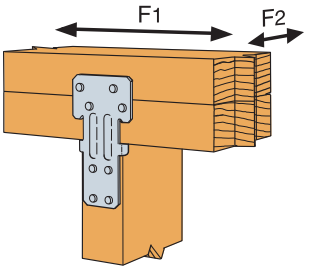

(2) Typical RSP4 Stud to Double Top Plate
(see footnote 4)

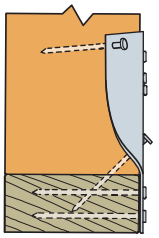

SP1 Nailing Profile

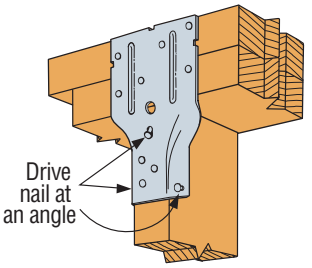

Typical SP2 Installation

C-C-2021 ©2021 SIMPSON STRONG-TIE COMPANY INC.

Stud Plate Ties (cont.)

These products are available with additional corrosion protection. For more information, see p. 14.

SS For stainless-steel fasteners, see p. 21.

SD Many of these products are approved for installation with Strong-Drive® SD Connector screws. See pp. 348–352 for more information.

Model No.	Dimensions (in.) W	Dimensions (in.) L	Stud	Plate Width	Fasteners (in.) Stud	Fasteners (in.) Plate	Allowable Uplift Loads DF/SP Side[8] (160)	DF/SP Center[9] (160)	SPF/HF Side[8] (160)	SPF/HF Center[9] (160)	Code Ref.
SP1	3½	5 1/16	2x	—	(6) 0.148 x 3	(4) 0.148 x 3	555	555	535	535	IBC, FL, LA
SP2	3½	6⅝	2x	—	(6) 0.148 x 3	(6) 0.148 x 3	1,010	1,010	605	605	
SP4	3 9/16	7¼	2x	4x	(6) 0.148 x 1½	—	415	825	355	710	
SP6	5 9/16	7¾	2x	6x	(6) 0.148 x 1½	—	415	825	355	710	
SP8	7 5/16	8 5/16	2x	8x	(6) 0.148 x 1½	—	415	825	355	710	
SPH4	3 9/16	8¾	2x	4x	(10) 0.148 x 1½	—	520	1,040	450	895	
					(12) 0.148 x 1½	—	640	1,280	550	1,100	
SPH6	5 9/16	9¼	2x	6x	(10) 0.148 x 1½	—	520	1,040	450	895	
					(12) 0.148 x 1½	—	640	1,280	550	1,100	
SPH8	7 5/16	8⅜	2x	8x	(10) 0.148 x 1½	—	520	1,040	450	895	
					(12) 0.148 x 1½	—	640	1,280	550	1,100	
RSP4 (1)	2⅛	4½	2x	—	(4) 0.131 x 1½	(4) 0.131 x 1½	245	245	285	285	
RSP4 (2)	2⅛	4½	2x	—	(4) 0.131 x 1½	(4) 0.131 x 1½	390	390	370	370	
CS20	1¼	24	2x	—	(6) 0.148 x 1½	—	—	550	—	475	
				—	(10) 0.148 x 1½	—	—	915	—	790	
SS CS16	1¼	26	2x	—	(12) 0.148 x 1½	—	—	1,135	—	980	
				—	(14) 0.148 x 1½	—	—	1,325	—	1,140	

1. See pp. 266–267 for Straps and Ties General Notes.
2. SP1/SP2 — drive one stud nail at an angle through the stud into the plate to achieve the table load (see illustration).
3. RSP4 — see Installation details (1) and (2) for reference.
4. RSP4 — F_2 is 225 lb. for Installation 1 and 245 lb. for Installation 2. F_1 load is 165 lb. for both installations.
5. Maximum load for SPH in southern yellow pine is 1,415 lb. for center loading and 710 lb. for side loading.
6. When cross-grain bending or cross-grain tension cannot be avoided in the members, mechanical reinforcement to resist such forces shall be considered by the designer.
7. For retrofit application, use CS16 and CS20. Total length of strap and total nail quantity are listed.
8. Use Side (eccentric) load when uplift loads are applied to only one face of the top plate.
9. Use Center (concentric) loads when uplift loads are applied at the centerline of the top plate, or where equal loads are applied to both sides of the top plate. Center loads should also be used for stud-to-bottom plate loads.
10. Order SPH4R and SPH6R for installation over ½" sheathing with a maximum DF/SP load of 1,360 lb. for center loading.
11. **Fasteners:** Nail dimensions are listed diameter by length. See pp. 21–22 for fastener information.

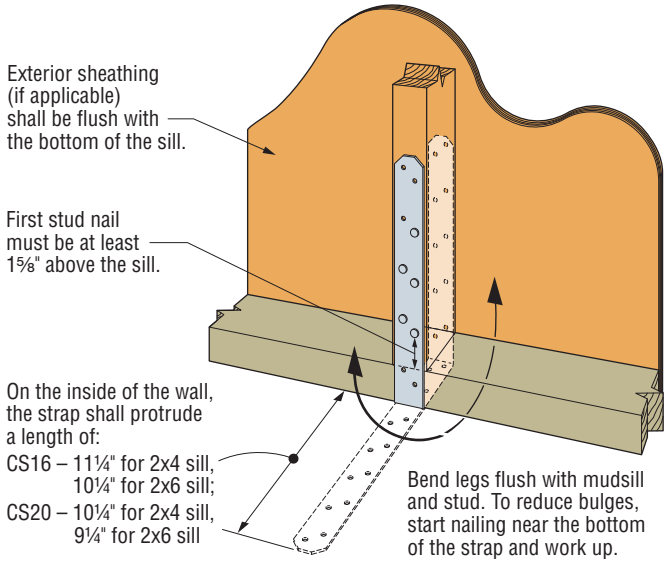

Typical CS Installation Stud to Mudsill

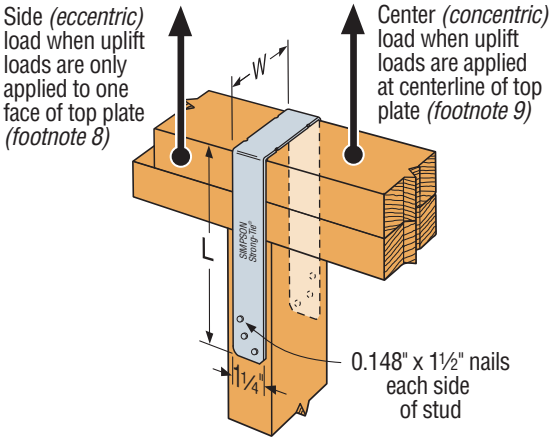

Typical SP4 Installation
(SPH similar)

C-C-2021 ©2021 SIMPSON STRONG-TIE COMPANY INC.

DSP/SSP/SP/SPH/RSP4/TSP/CS

Stud Plate Ties (cont.)

These products are available with additional corrosion protection. For more information, see p. 14.

Model No.	Dimensions (in.)		Fasteners (in.)			Allowable Uplift Loads (160)			Code Ref.
	W	L	Studs	Double Top Plate	Single Sill Plate	Double Top Plate	Single Sill Plate		
						DF/SP/SPF	DF/SP	SPF/HF	
SSP	1⅜	6 11/16	(4) 0.148 x 1½	(3) 0.148 x 1½	—	330	—	—	IBC, FL, LA
				—	(1) 0.148 x 1½	—	395	310	
			(4) 0.148 x 3	(3) 0.148 x 3	—	410	—	—	
				—	(1) 0.148 x 3	—	430	400	
DSP	2¾	6 11/16	(8) 0.148 x 1½	(6) 0.148 x 1½	—	730	—	—	
				—	(2) 0.148 x 1½	—	620	515	
			(8) 0.148 x 3	(6) 0.148 x 3	—	780	—	—	
				—	(2) 0.148 x 3	—	780	565	
TSP	1½	7⅞	(6) 0.148 x 1½	—	(3) 0.148 x 1½	—	465[5]	400	
			(9) 0.148 x 1½	(6) 0.148 x 1½	—	755[4]	—	—	
				(6) 0.148 x 3		1,015[4]			

1. See pp. 266–267 for Straps and Ties General Notes.
2. When cross-grain bending or cross-grain tension cannot be avoided in the members, mechanical reinforcement to resist such forces shall be considered by the designer.
3. Allowable loads for DSP installed to a rim board are 620 lb. (DF/SP) and 515 lb. (SPF/HF).
4. Noted values apply only to DF/SP members. For SPF values, multiply by 0.86.
5. Southern pine allowable uplift load is 520 lb.
6. **Fasteners:** Nail dimensions are listed diameter by length. See pp. 21–22 for fastener information.

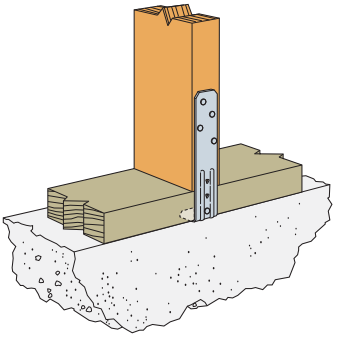

Typical SSP Installed to Sill Plate
(DSP similar for double stud)

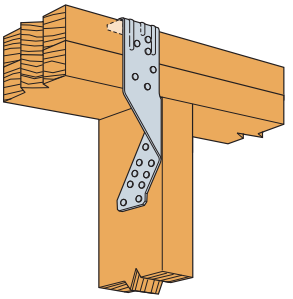

Typical TSP Installed to Top Plate

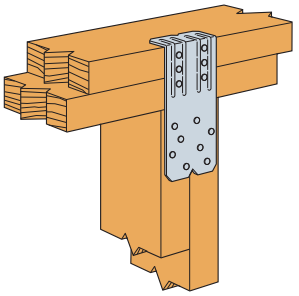

Typical DSP Installed to Top Plate
(SSP similar for single stud)

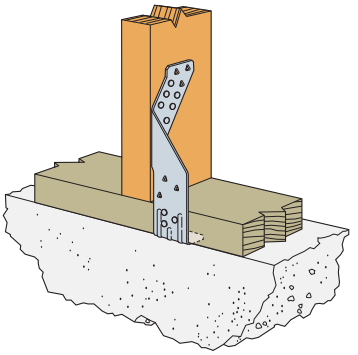

Typical TSP Installed to Sill Plate

C-C-2021 ©2021 SIMPSON STRONG-TIE COMPANY INC.

LTS/MTS/HTS

Twist Straps

Twist straps provide a tension connection between two wood members. They resist uplift at the heel of a truss economically. LTS/MTS have a 2"-bend section and HTS has a 3¾"-bend section that eliminates interference at the transition points between the two members.

Material: LTS — 18 gauge; MTS — 16 gauge; HTS — 14 gauge

Finish: Galvanized. Some products available in stainless steel or ZMAX® coating. See Corrosion Information, pp. 12–15.

Installation:

- Use all specified fasteners, with half into each member being connected, to achieve the listed loads; see General Notes.
- LTS, MTS and HTS are available with the bend reversed. Specify "-REV" after the model number, such as MTS16-REV.

Codes: See p. 11 for Code Reference Key Chart

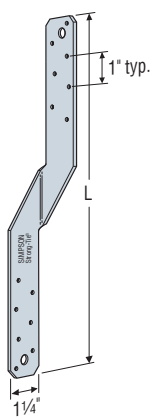

LTS12
(MTS and HTS similar)

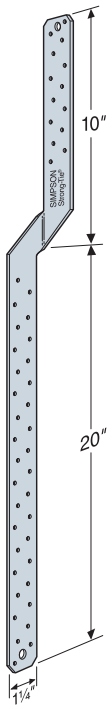

MTS30
(HTS30 similar)

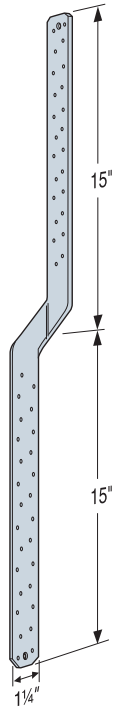

HTS30C
(MTS30C similar)

These products are available with additional corrosion protection. For more information, see p. 14.

SS For stainless-steel fasteners, see p. 21.

SD Many of these products are approved for installation with Strong-Drive® SD Connector screws. See pp. 348–352 for more information.

	Model No.	Strap Length (in.)	Total Quantity of Fasteners		DF/SP Allowable Uplift Loads (160)		SPF/HF Allowable Uplift Loads (160)		Code Ref.
			0.148" x 3" Nails	0.148" x 1½" Nails	0.148" x 3" Nails	0.148" x 1½" Nails	0.148" x 3" Nails	0.148" x 1½" Nails	
SS	LTS12	12	12	12	660	645	570	515	IBC, FL, LA
	LTS16	16							
	LTS20	20							
SS	MTS12	12	14	14	990	990	850	850	
	MTS16	16							
SS	MTS20	20							
	MTS24C	24							
	MTS30	30							
	MTS30C	30							
	HTS16	16	16	16	1,415	1,415	1,215	1,215	
	HTS20	20							
	HTS24	24							
	HTS30	30							
	HTS30C	30							

1. See pp. 266–267 for Straps and Ties General Notes.
2. All LTS, MTS and HTS models (except for MTS12 and HTS16) have additional nail holes.
3. All straps except the MTS30 and HTS30 have the twist in the center of the strap.
4. Twist straps do not need to be wrapped over the truss to achieve the allowable load.
5. May be installed on the inside face of the stud.
6. Allowable lateral loads are F_1 = 75 lb. and F_2 = 125 lb. when the following installation requirements are met. The first seven nail holes on each side of the bend must be filled with 0.148" x 1½" minimum nails. All additional fasteners may be installed in any remaining strap holes.
7. For simultaneous loads in more than one direction, the connector must be evaluated using either the Unity Equation or the 75% Rule, as described in Straps and Ties General Notes on p. 267.
8. **Fasteners:** Nail dimensions are listed diameter by length. See pp. 21–22 for fastener information.

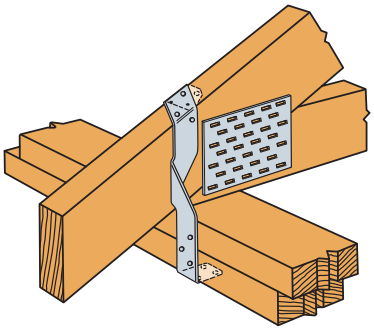

MTS Installation as a Truss-to-Top Plate Tie

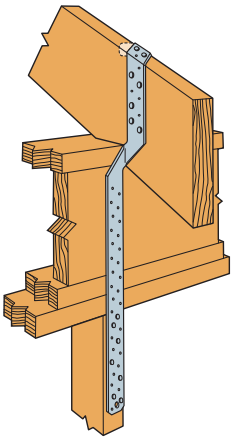

Typical MTS30 Installation

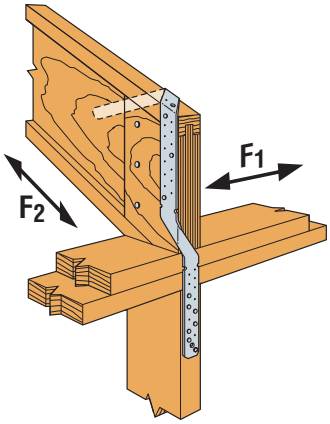

MTS30 Installation with I-Joist Rafter

C-C-2021 ©2021 SIMPSON STRONG-TIE COMPANY INC.

LGT/MGT/VGT/HGT

Girder Tiedowns

The LGT, MGT, VGT and HGT are girder tiedowns for moderate- to high-load capacity applications. The LGT and VGT are also suitable for retrofit applications.

LGT connectors provide a low-profile connection to the studs for easy installation of drywall. Simple to install and can be installed on the inside or outside of the wall. LGT connectors also provide exceptional bearing enhancement for heavy download applications.

The Variable Girder Tiedown (VGT) is a higher capacity alternative to the LGT and MGT for girder trusses. It attaches with Strong-Drive® SDS Heavy-Duty Connector screws to the side of truss and features a predeflected crescent washer that allows it to accommodate top chord pitches up to 8/12. The VGT is also available with one flange concealed for attachment to trusses with no tail.

The HGT offers the highest uplift capacity for girders and can be installed on trusses and beams with top chord slopes up to 8/12.

Material: HGT, VGT — 7 gauge; LGT2 — 14 gauge; MGT, LGT3, LGT4 — 12 gauge

Finish: HGT — Simpson Strong-Tie gray paint; LGT, MGT, VGT — galvanized

Installation:

- When the HGT-3 is used with a 2-ply girder or beam, shimming is required. Fasten shim to act as one unit.
- Before installing fasteners, ensure LGT3-SDS2.5 makes complete contact with bottom of truss.
- Strong-Drive SDS Heavy-Duty Connector screws included with LGT3, LGT4 and VGT series.
- VGT — Can be installed on roof pitches up to 8/12 or on a bottom chord designed to transfer the load.
- VGT — Screw holes are configured to allow for double installation on a two-ply (minimum) truss.
- VGT — When installed on trusses with no overhangs, specify VGTR/L.
- VGT — Install washer component (provided) so that top of washer is horizontal as well as parallel with top-of-wall top plate.
- LGT3-SDS2.5 — The four large hexagon holes are intended for GFCMU and concrete applications.
- MGT — May be installed with straps straight vertically on minimum 5½"-wide truss web, or with straps wrapped over truss heel. For wrapped installations, install minimum of six nails into the face of the roof member on the same side as MGT base.
- See pp. 258–259 for masonry applications.

Codes: See p. 11 for Code Reference Key Chart

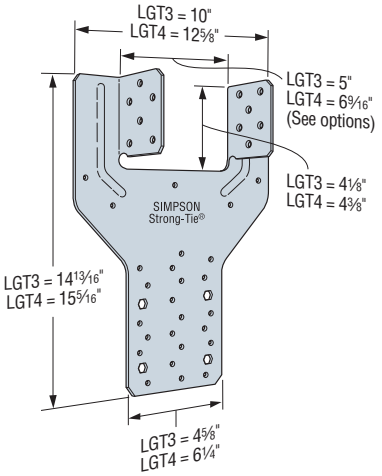

LGT3-SDS2.5
(LGT4-SDS3 similar)

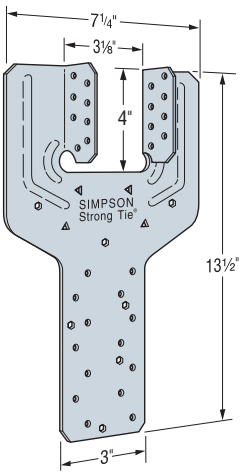

LGT2

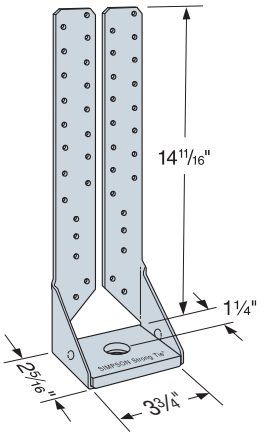

MGT

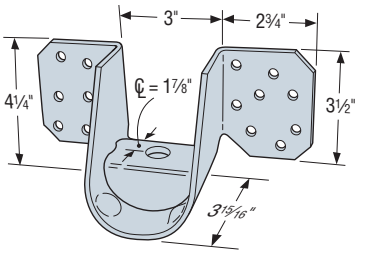

VGT
US Patent
7,707,785

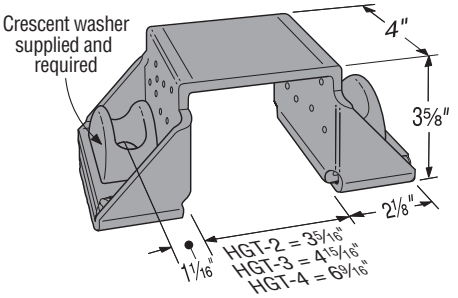

HGT-2
(HGT-3, HGT-4 similar)

C-C-2021 ©2021 SIMPSON STRONG-TIE COMPANY INC.

Girder Tiedowns (cont.)

These products are available with additional corrosion protection. For more information, see p. 14.

Model No.	Qty.	No. of Plies	O.C. Dim. Between Anchors (in.)	Fasteners (in.)		DF/SP Allowable Loads			SPF/HF Allowable Loads			Code Ref.
				Stud/Plate Nails or Anchor Diameter	Girder	Uplift (160)	F_1 (160)	F_2 (160)	Uplift (160)	F_1 (160)	F_2 (160)	
LGT2	1	2 ply	—	(14) 0.148 x 3¼	(16) 0.148 x 3¼	2,040	700	170	1,755	700	170	FL
	1	2 ply	—	(14) #9 x 1½" SD	(16) #9 x 1½" SD	2,465	700	170	2,125	700	170	
LGT3-SDS2.5	1	3 ply	—	(26) 0.148 x 3¼	(12) ¼ x 2½ SDS	3,480	795	385	2,505	795	385	
LGT4-SDS3	1	4 ply	—	(30) 0.148 x 3¼	(16) ¼ x 3 SDS	4,060	2,000	675	2,920	2,000	675	
MGT	1	1 ply min.	—	(1) ⅝	(22) 0.148 x 1½	3,165	—	—	2,720	—	—	IBC, FL, LA
	1	2 ply min.	—	(1) ⅝	(22) 0.148 x 3	3,965	775	525	3,330	775	525	
VGT	1	2 ply min.	—	(1) ⅝	(16) ¼ x 3 SDS	4,940	1,185	590	3,555	1,185	590	
	2	2 ply min.	—	(2) ⅝	(32) ¼ x 3 SDS	7,185	1,185	590	5,170	1,185	590	
	2	3 ply min.	—	(2) ⅝	(32) ¼ x 3 SDS	8,890	1,185	590	6,400	1,185	590	
VGTR/L	1	2 ply min.	—	(1) ⅝	(16) ¼ x 3 SDS	2,225	650	630	1,600	650	630	
	2	2 ply min.	—	(2) ⅝	(32) ¼ x 3 SDS	5,545	650	630	3,990	650	630	
HGT-2	1	2 ply	5¾	(2) ⅝	(16) 0.148 x 3	10,345	—	—	6,485	—	—	
HGT-3	1	3 ply	7⅜	(2) ⅝	(16) 0.148 x 3	10,440	—	—	9,035	—	—	
HGT-4	1	4 ply	9	(2) ⅝	(16) 0.148 x 3	11,395	—	—	9,250	—	—	

1. See pp. 266–267 for Straps and Ties General Notes.
2. LGT2 — F_2 load requires installation of four 0.148" x 3¼" sinkers or four #9 x 1½" SD Connector screws (SD) in optional nail holes.
3. LGT4 — F_2 load requires installation of seven 0.148" x 3¼" sinkers in optional nail holes.
4. LGT4 — Uplift for DF/SP girder and SPF studs is 3,860 lb.
5. LGT connectors can provide bearing enhancement loads for truss download reactions. For more information, refer to technical bulletin T-C-HTIEBEAR at **strongtie.com**.
6. LGT2 installed with #9 x 1½" SD Connector screws (SD) will achieve double the uplift load when installed on opposite sides of the top plates, but on separate truss members. See typical back-to-back LGT2 installation detail. Lateral loads may not be doubled.
7. Girder tiedowns installed on the outside of the wall require a 3½" overhang to achieve table loads.
8. Strong-Drive® SDS Heavy-Duty Connector screws (SDS) may be installed through metal truss plates as approved by the Truss Designer, provided the requirements of ANSI/TPI 1-2014, Sections 7.5.3.4 and 8.9.2 are met (predrilling required through the plate using a 5⁄32" bit maximum).
9. **Fasteners:** Nail dimensions are listed diameter by length. SD and SDS screws are Simpson Strong-Tie® Strong-Drive screws. See pp. 21–22 for fastener information.

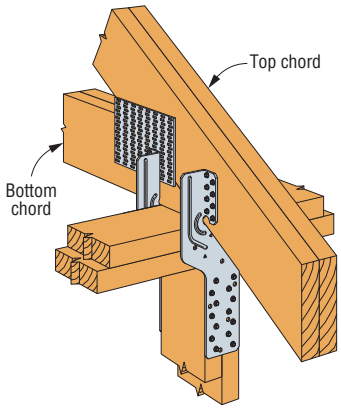

Typical LGT2 Back-to-Back Installation on Separate Truss Members

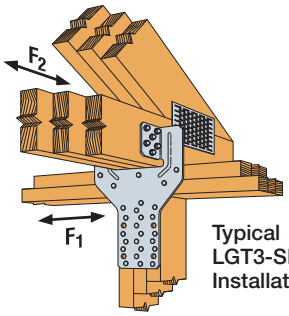

Typical LGT3-SDS2.5 Installation

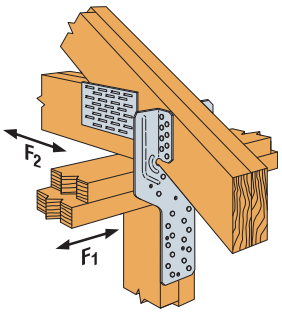

Typical LGT2 Installation

Install two LBP⅝" washers on top of each crescent washer (total four ⅝" washers) for wood installation. All washers and crescent washers are required. Crescent washers are supplied.

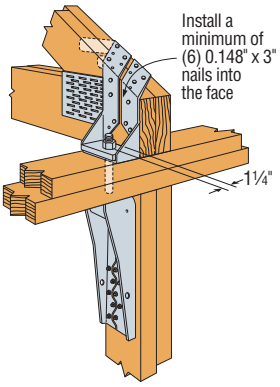

Typical MGT Installation with HDU4

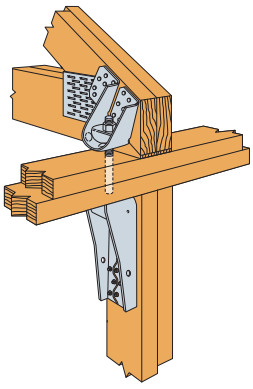

Typical VGTR Single Installation with HDU2

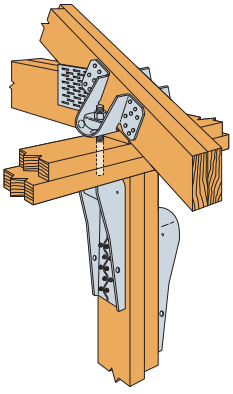

Typical VGT Double Installation with HDU4s

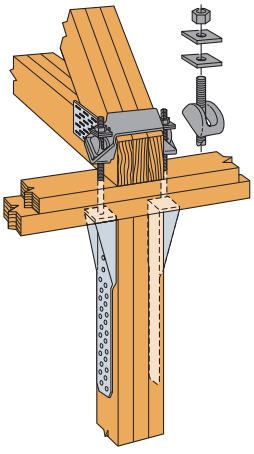

Typical HGT-3 Installation with Full-Height Threaded Rod

C-C-2021 ©2021 SIMPSON STRONG-TIE COMPANY INC.

LTP4/LTP5/A34/A35

Framing Angles and Plates

The larger LTP5 spans subfloor at the top of the blocking or rim board. The embossments enhance performance.

The LTP4 lateral tie plate transfers shear forces for top plate-to-rim board or blocking connections. Nail holes are spaced to prevent wood splitting for single and double top-plate applications. May be installed over plywood sheathing.

The A35 angle's exclusive bending slot allows instant, accurate field bends for all two- and three-way ties. Balanced, completely reversible design permits the A35 to secure a great variety of connections.

Material: LTP4/LTP5 — 20 gauge; all others — 18 gauge

Finish: Galvanized. Some products available in stainless steel or ZMAX® coating. See Corrosion Information, pp. 12–15.

Installation:

- Use all specified fasteners; see General Notes
- A35 — Bend one time only

Codes: See p. 11 for Code Reference Key Chart

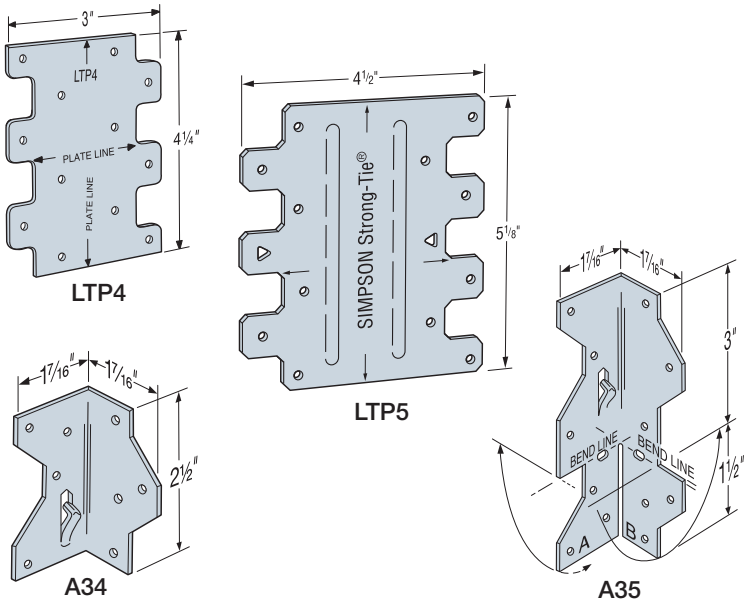

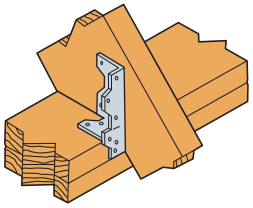

Joists to Plate with A Leg Inside

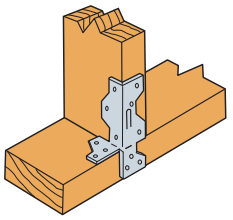

Studs to Plate with B Leg Outside

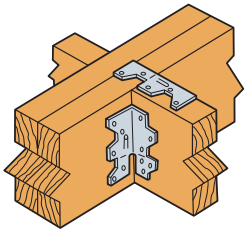

Joists to Beams

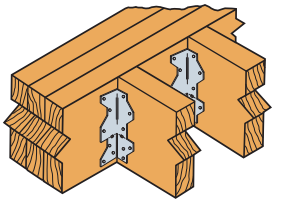

Ceiling Joists to Beam

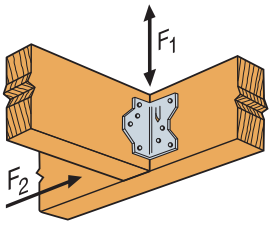

1 A34

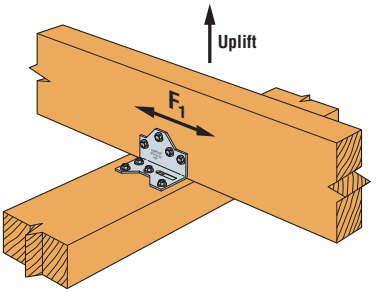

1 A34 Installed with SD Screws

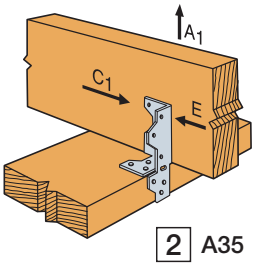

2 A35

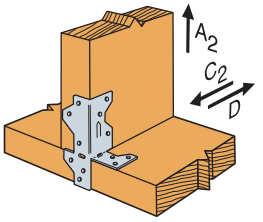

3 A35

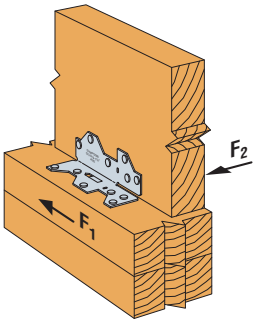

4 A35

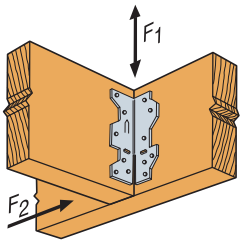

4 A35

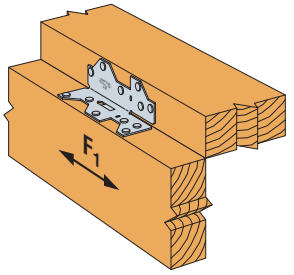

5 A35

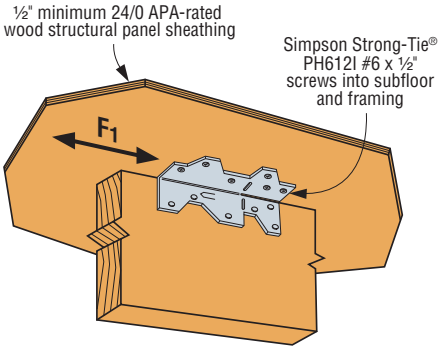

6 A35

C-C-2021 ©2021 SIMPSON STRONG-TIE COMPANY INC.

LTP4/LTP5/A34/A35

Framing Angles and Plates (cont.)

These products are available with additional corrosion protection. For more information, see p. 14.

SS For stainless-steel fasteners, see p. 21.

SD Many of these products are approved for installation with Strong-Drive® SD Connector screws. See pp. 348–352 for more information.

Model No.	Type of Connection	Fasteners (in.)	Direction of Load	DF/SP Allowable Loads			SPF/HF Allowable Loads			Code Ref.
				Floor (100)	Roof (125)	(160)	Floor (100)	Roof (125)	(160)	
A34	1	(8) 0.131 x 1½	F_1	395	480	545	340	415	480	IBC, FL, LA
			F_2[6]	395	430	430	340	370	370	
		(8) #9 x 1½" SD	F_1	640	640	640	550	550	550	
			F_2	495	495	495	425	425	425	
			Uplift	240	240	240	170	170	170	—
A35	2	(9) 0.131 x 1½	A_1	295	350	350	255	300	300	IBC, FL, LA
			E	295	360	385	255	310	330	
			C_1	185	185	185	160	160	160	
	3	(12) 0.131 x 1½	A_2	295	325	325	255	280	280	
			C_2	295	330	330	255	285	285	
			D	225	225	225	195	195	195	
	4	(12) 0.131 x 1½	F_1	590	650	650	510	560	560	
			F_2[6]	590	670	670	510	575	575	
	5	(12) 0.131 x 1½	F_1	555	555	555	475	475	475	
	6	(12) PH612I	F_1	420	420	420	360	360	360	—
LTP4	7	(12) 0.131 x 1½	G	580	715	715	500	615	615	IBC, FL, LA
			H	525	525	525	450	450	450	
LTP5	8	(12) 0.131 x 1½	G	565	565	565	485	485	485	
			H	490	490	490	420	420	420	

1. Allowable loads are for one angle. When angles are installed on each side of the joist, the minimum joist thickness is 3".
2. Some illustrations show connections that could cause cross-grain tension or bending of the wood during loading if not reinforced sufficiently. In this case, mechanical reinforcement should be considered.
3. LTP4 can be installed over ⅜" wood structural panel sheathing with 0.131" x 1½" nails and achieve 0.72 of the listed load, or over ½" sheathing and achieve 0.64 of the listed load. 0.131" x 2½" nails will achieve 100% load.
4. LTP4 satisfies the IRC continuously sheathed portal frame (CS-PF) framing anchor requirements when installed over raised wood floor framing per Figure R602.10.6.4.
5. The LTP5 may be installed over wood structural panel sheathing up to ½" thick using 0.131" x 1½" nails with no reduction in load.
6. Connectors are required on both sides to achieve F_2 loads in both directions.
7. A34 and A35 installed with 0.131" x 1½" nails onto 1¼" LSL material will achieve 0.90 of the listed F_1 and F_2 loads.
8. **Fasteners:** Nail dimensions are listed diameter by length. SD screws are Simpson Strong-Tie® Strong-Drive® SD Connector screws. PH612I is a pan-head #6 x ½" screw available from Simpson Strong-Tie. See pp. 21–22 for other nail sizes and information.

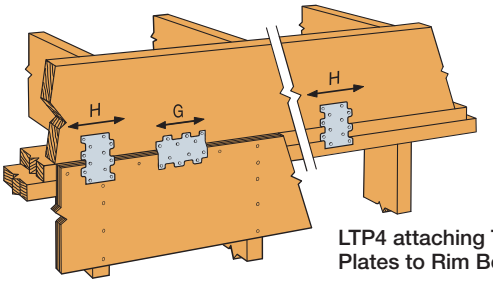

LTP4 attaching Top Plates to Rim Board

7 LTP4 Installed over Wood Structural Panel Sheathing

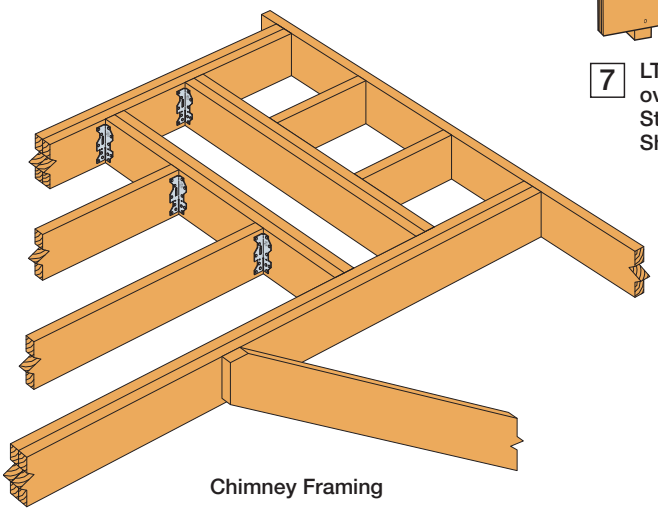

Chimney Framing

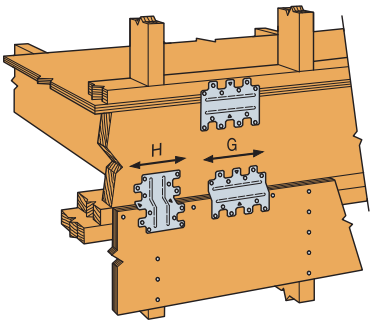

8 LTP5 Installed over Wood Structural Panel Sheathing or Attaching Plate to Rim Board

C-C-2021 ©2021 SIMPSON STRONG-TIE COMPANY INC.

RBC

Roof Boundary Clip

The RBC roof boundary clip is designed to aid installation and transfer shear loads between the roof diaphragm and wall. The locator tabs make proper location of the clip easy. The RBC can be used on wood or masonry walls and will handle roof pitches from 0/12 to 12/12. The RBC is available with prongs into one side (RBCP) for pre-attachment of the part to a block at the truss plant.

Material: 20 gauge

Finish: Galvanized

Installation:

- Use all specified fasteners; see General Notes
- Field bend to desired angle — one time only
- RBCP should be pressed on to blocking, not hammered

Codes: See p. 11 for Code Reference Key Chart

The RBC installed to blocking resists rotation and lateral displacement of rafter or truss.
Code references:

- IRC 2012/2015/2018/2021, R802.8 Lateral Support
- IBC 2012, 2308.10.6; 2015/2018/2021, 2308.7.8 Blocking

Blocking allows proper edge nailing of sheathing.
Code references:

- IRC 2012, Table R602.3(1), footnote i, 2015/2018/2021, Table R602.3(1), footnote h
- IBC 2012/2015/2018/2021, 2305.1 Shear Panel Connections

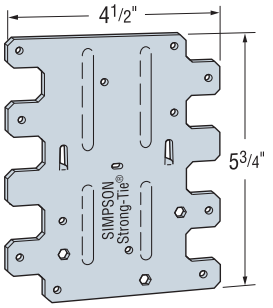

RBC
US Patent 7,293,390

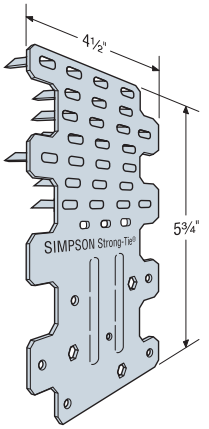

RBCP – Flat
US Patent 7,293,390

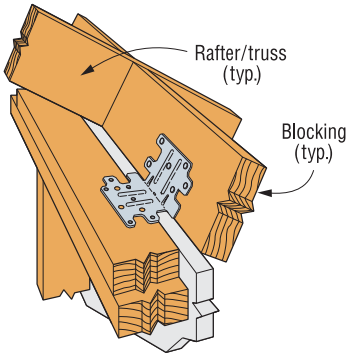

Typical RBC Installation Over 1" Foam Board[5]

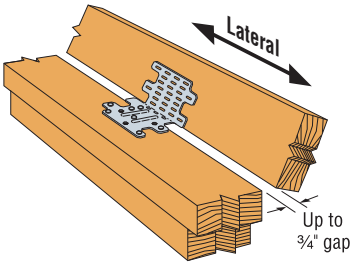

Typical RBCP Installation
US Patent 7,549,262

Model No.	Type of Connection	Bending Angle	Fasteners (in.)		DF/SP Allowable Loads	SPF/HF Allowable Loads	Code Ref.
			To Wall	To Blocking	Lateral (160)	Lateral (160)	
RBC RBCP	1	45° to 90°	(6) 0.148 x 1½	(6) 0.148 x 1½	445	380	IBC, FL, LA
	2	< 30°	(6) 0.148 x 1½	(6) 0.148 x 1½	435	375	
		30° to 45°	(6) 0.148 x 1½	(6) 0.148 x 1½	465	400	
	3	0° to 45°	(3) ¼ x 2¼ Titen Turbo™[4]	(6) 0.148 x 1½	350	350	—

1. See pp. 266–267 for Straps and Ties General Notes.
2. Allowable loads are for one anchor attached to blocking a minimum of 1½" thick.
3. RBC/RBCP can be installed with up to a ¾" gap and achieve 100% of the listed load.
4. When attaching to concrete, use three ¼" x 1¾" TNT25134H Titen Turbo screw anchors.
5. RBC/RBCP installed over 1" foam board has a load of 395 lb. (160) in a parallel-to-wall (F_1) load direction for Douglas fir. For SPF, the load is 340 lb.
6. RBC/RBCP may be installed over ½" structural sheathing using 0.148" x 1½" nails with no load reduction.
7. **Fasteners:** Nail dimensions are diameter by length. Titen Turbo screws are Simpson Strong-Tie® concrete and masonry screws. See pp. 21–22 for fastener information.

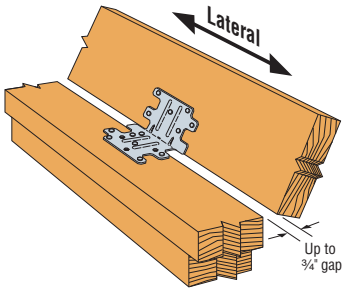

1 Typical RBC Installation
(RBCP similar)

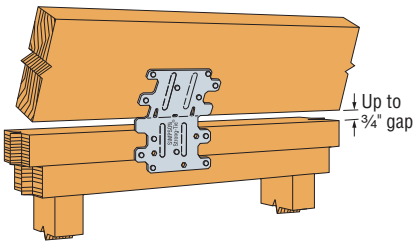

2 Typical RBC Installation
(RBCP similar)

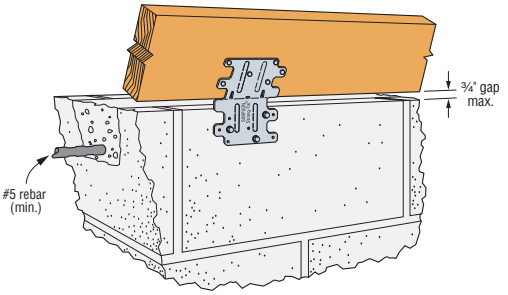

3 Typical RBC Installation to GFCMU Block
(RBCP similar)

C-C-2021 ©2021 SIMPSON STRONG-TIE COMPANY INC.

HSLQ

Heavy Shear Transfer Angle

The HSLQ heavy shear transfer angle is designed to transfer lateral loads from wood solid sawn joists or blocking into a wood solid sawn element such as a moment frame nailer. The angle offers versatility by allowing up to a 2" gap between the structural members and easy installation with Strong-Drive® SDS Heavy-Duty Connector screws that are included with the HSLQ. The HSLQ is manufactured with a gap indication notch to make proper installation easy.

Material: 12 gauge

Finish: Galvanized, available in HDG

Installation:

- Use all specified fasteners: see General Notes.
- Use long leg with notch indicator. (Notch indicates maximum allowed gap.)
- Minimum 4x8 wood members are required.
- Add filler shims where required in order not to load the angle in any direction other than lateral, as indicated.

Codes: See p. 11 for Code Reference Key Chart

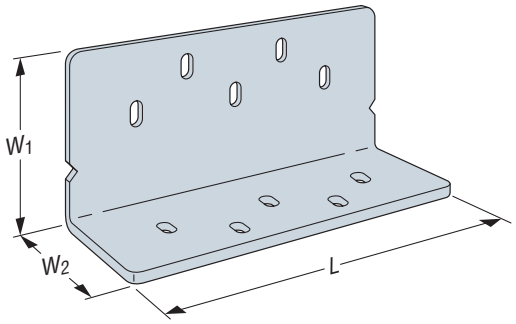

HSLQ37
(HSLQ312, HSLQ47, HSLQ412 similar)

Model No.	Allowable Gap	Dimension (in.)			Fasteners ¼" x 2½" SDS	Allowable Loads DF/SP (100/115/125/160)	Allowable Loads SPF/HF (100/115/125/160)	Code Ref.
		W_1	W_2	L		Lateral (F_1)	Lateral (F_1)	
HSLQ37-SDS2.5	0" – 1"	3¼	2¾	7¼	10	1,340	1,150	—
HSLQ312-SDS2.5	0" – 1"	3¼		11¾	18	2,900	2,495	
HSLQ47-SDS2.5	1" – 2"	4¼		7¼	10	1,015	870	
HSLQ412-SDS2.5	1" – 2"	4¼		11¾	18	2,290	1,970	

1. Tables loads are for one angle.
2. Loads are applicable to installation on either the narrow or the wide face of the member.
3. Minimum 4x8 wood members are required.
4. HSLQ is used for in-plane lateral load transfer only. Designer to provide for frame out-of-plane stability as required.
5. **Fasteners:** SDS screws are Simpson Strong-Tie® Strong-Drive SDS Heavy-Duty Connector screws. See pp. 21–22 for fastener information.

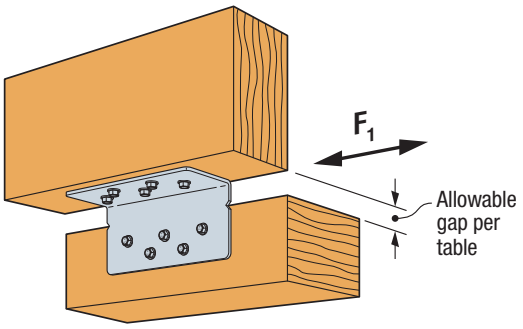

Typical HSLQ37 Installation

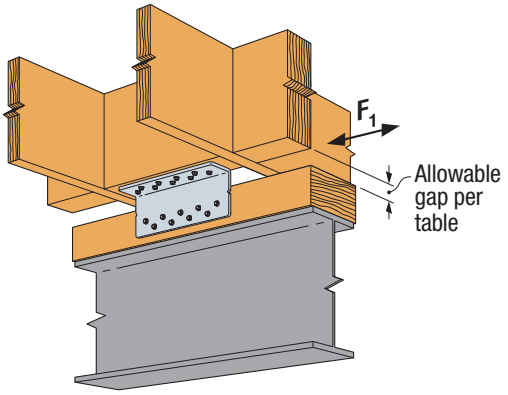

Typical HSLQ412 Installation

C-C-2021 ©2021 SIMPSON STRONG-TIE COMPANY INC.

L/LS/GA

Reinforcing and Skewable Angles

L — Staggered nail pattern reduces the possibility for splitting.

LS — Field-adjustable 0° to 135° angles.

GA — Gusset angles' embossed bend section provides added strength.

Material: L — 16 gauge; GA and LS — 18 gauge

Finish: Galvanized. Some products available in stainless steel or ZMAX® coating. See Corrosion Information, pp. 12–15.

Installation:

- Use all specified fasteners; see General Notes
- LS — Field skewable; bend one time only
- Joist must be constrained against rotation (for example, with solid blocking) when using a single LS per connection
- Nail the L angle's wider leg into the joist to ensure table loads and allow correct nailing

Codes: See p. 11 for Code Reference Key Chart

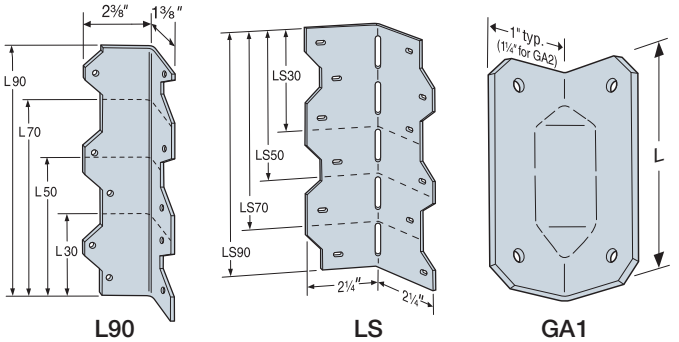

L90 LS GA1

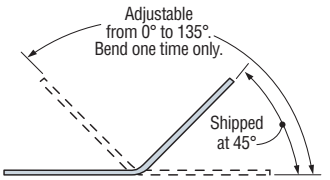

LS Top View

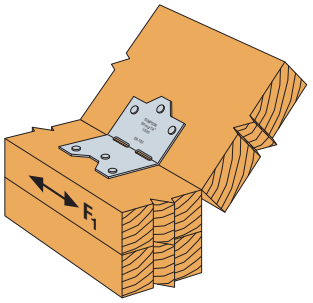

Typical LS30 Installation

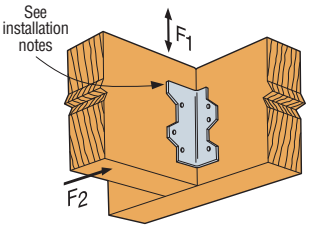

Typical L50 Installation

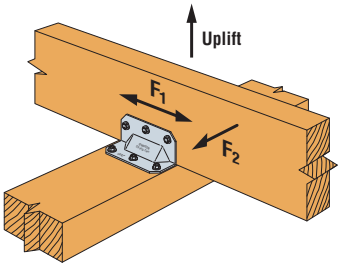

Typical GA Installation

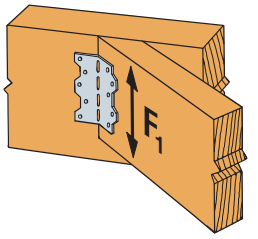

Typical LS70 Installation

These products are available with additional corrosion protection. For more information, see p. 14.

SS For stainless-steel fasteners, see p. 21.

SD Many of these products are approved for installation with Strong-Drive® SD Connector screws. See pp. 348–352 for more information.

Model No.	Fasteners (in.)	L (in.)	Load Direction	DF/SP Allowable Loads				SPF/HF Allowable Loads				Code Ref.
				Floor (100)	Snow (115)	Roof (125)	Wind/ Seismic (160)	Floor (100)	Snow (115)	Roof (125)	Wind/ Seismic (160)	
GA1	(4) 0.148 x 1½	2¾	F_1, F_2	235	270	290	350	200	230	250	300	IBC, FL, LA
	(4) #9 x 1½" SD		F_1	340	375	375	375	225	260	280	325	IBC, LA
	(4) #9 x 1½" SD		F_2	340	395	430	435	225	260	280	360	
GA2	(6) 0.148 x 1½	3¼	F_1, F_2	355	405	435	550	305	350	375	475	IBC, FL, LA
	(6) #9 x 1½" SD		F_1	515	590	640	695	335	385	420	540	IBC, LA
	(6) #9 x 1½" SD		F_2	515	590	640	820	335	385	420	540	
L30	(4) 0.148 x 1½	3	F_1	245	250	250	250	210	215	215	215	IBC, FL, LA
			F_2	245	275	295	370	210	235	255	320	
L50	(6) 0.148 x 1½	5	F_1	365	415	445	525	315	355	385	450	
			F_2	365	415	445	555	315	355	385	475	
L70	(8) 0.148 x 1½	7	F_1, F_2	485	550	595	740	415	475	510	635	
L90	(10) 0.148 x 1½	9	F_1, F_2	610	690	740	925	525	595	635	795	
LS30	(6) 0.148 x 1½	3⅜	F_1	320	320	320	320	275	275	275	275	
	(6) 0.148 x 3		F_1	355	395	395	395	305	340	340	340	
SS LS50	(8) 0.148 x 1½	4⅞	F_1	475	540	560	560	410	465	480	480	
	(8) 0.148 x 3		F_1	475	540	580	730	410	465	500	630	
LS70	(10) 0.148 x 1½	6⅜	F_1	590	645	645	645	510	555	555	555	
	(10) 0.148 x 3		F_1	590	675	725	915	510	580	625	785	
LS90	(12) 0.148 x 1½	7⅞	F_1	710	805	870	890	610	690	750	765	
	(12) 0.148 x 3		F_1	710	805	870	1,040	610	690	750	895	

1. GA angles may be installed with 0.148" x 3" nails.
2. GA1 uplift is 425 lb. for DF and 300 lb. for SPF when installed with Strong-Tie® SD Connector screws.
3. GA2 uplift is 370 lb. for DF and 260 lb. for SPF when installed with Strong-Tie® SD Connector screws.
4. **Fasteners:** Nail dimensions are listed diameter by length. SD screws are Simpson Strong-Tie® Strong-Drive SD Connector screws. See pp. 21–22 for fastener information.

C-C-2021 ©2021 SIMPSON STRONG-TIE COMPANY INC.

Angle

Our line of angles provides a way to make a wide range of 90° connections.

Material: A21 and A23 — 18 ga.; all other A angles — 12 ga.

Finish: Galvanized. Some products available in stainless steel or ZMAX® coating. See Corrosion Information, pp. 12–15.

Installation:

- Use all specified fasteners; see General Notes

Codes: See p. 11 for Code Reference Key Chart

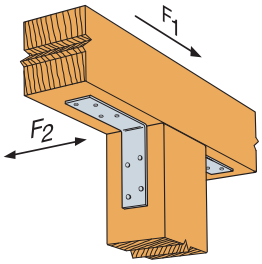

A44 Installation
(A33 similar)

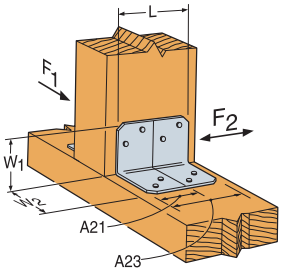

A21/A23 Installation

These products are available with additional corrosion protection. For more information, see p. 14.

SD Many of these products are approved for installation with Strong-Drive® SD Connector screws. See pp. 348–352 for more information.

Model No.	Dimensions (in.)			Fasteners (in.)				Allowable Loads DF/SP		Code Ref.
				Base		Post		(160)		
	W_1	W_2	L	Bolts	Nails	Bolts	Nails	F_1[3]	F_2	
A21	2	1½	1⅜	—	(2) 0.148 x 1½	—	(2) 0.148 x 1½	330	150	IBC, FL, LA
A23	2	1½	2¾	—	(4) 0.148 x 1½	—	(4) 0.148 x 1½	680	535	
A33	3	3	1½	—	(4) 0.148 x 3	—	(4) 0.148 x 3	765	340	
A44	4⁹⁄₁₆	4⅜	1½	—	(4) 0.148 x 3	—	(4) 0.148 x 3	775	290	
A66	5⅞	5⅞	1½	(2) ⅜	(3) 0.148 x 3	(2) ⅜	(3) 0.148 x 3	—	—	—
A88	8	8	2	(3) ⅜	(4) 0.148 x 3	(3) ⅜	(4) 0.148 x 3	—	—	
A24	3⅞	2	2½	(1) ½	—	(1) ½	(2) 0.148 x 3	—	—	
A311	11	3⅝	2	(1) ½	—	(1) ½	(4) 0.148 x 3	—	—	

1. See pp. 266–267 for Straps and Ties General Notes.
2. For SPF/HF lumber, use 0.86 x DF/SP allowable loads.
3. Connectors are required on both sides to achieve F_1 loads in both directions.
4. **Fasteners:** Nail dimensions are listed diameter by length. See pp. 21–22 for fastener information.

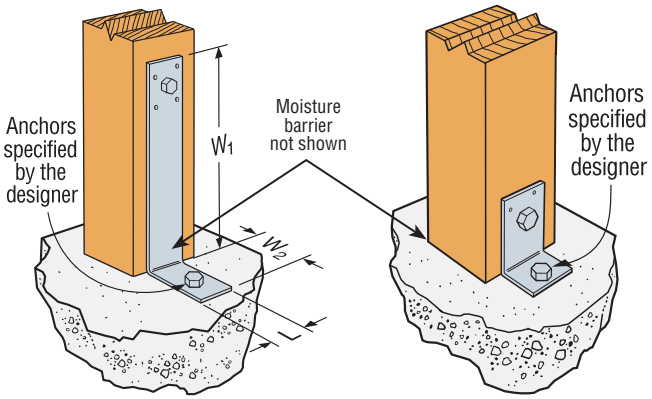

A311 Installation **A24 Installation**

C-C-2021 ©2021 SIMPSON STRONG-TIE COMPANY INC.

HL

Heavy Angle and Gusset

Versatile angle gussets and heavy angles promote standardization and construction economy, and are compatible with Simpson Strong-Tie structural hardware.

Finish: 8 ga. models — galvanized; 3 ga. models — Simpson Strong-Tie gray paint. May be ordered HDG or black powder coat (add HDG or PC to model no.); contact Simpson Strong-Tie.

Options:

- Gussets may be added to HL models when L ≥ 5" (specify G after model number, as in HL46G).

Codes: See p. 11 for Code Reference Key Chart

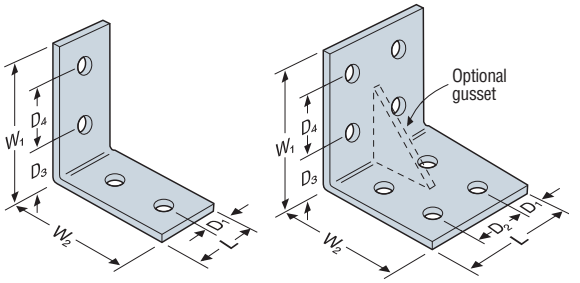

HL53 HL55

These products are available with additional corrosion protection. For more information, see p. 14.

Model No.	Ga.	Dimensions (in.)						Bolts (Total)		DF/SP Allowable Loads		Code Ref.
		W_1 and W_2	L	D_1	D_2	D_3	D_4	Qty.	Dia.	Uplift (160)	F_1 (160)	
Single Row Angles												
HL33	8	3¼	2½	1¼	—	2	—	2	½	740	1,040	—
HL35	8	3¼	5	1¼	2½	2	—	4	½	740	1,310	
HL37	8	3¼	7½	1¼	2½	2	—	6	½	740	1,310	
HL43	3	4¼	3	1½	—	2¾	—	2	¾	1,275	1,445	
HL46	3	4¼	6	1½	3	2¾	—	4	¾	1,275	1,680	
HL49	3	4¼	9	1½	3	2¾	—	6	¾	1,275	1,680	
Double Row Angles												
HL53	8	5¾	2½	1¼	—	2	2½	4	½	740	1,310	—
HL55	8	5¾	5	1¼	2½	2	2½	8	½	740	1,310	
HL57	8	5¾	7½	1¼	2½	2	2½	12	½	740	1,310	
HL73	3	7¼	3	1½	—	2¾	3	4	¾	2,445	2,885	
HL76	3	7¼	6	1½	3	2¾	3	8	¾	2,445	4,310	
HL79	3	7¼	9	1½	3	2¾	3	12	¾	2,445	4,310	

1. See pp. 266–267 for Straps and Ties General Notes.
2. For SPF/HF lumber, use 0.85 x DF/SP allowable loads.
3. Parts should be centered on the face of the member, which is at least as wide as the angle, to which they are attached.
4. Wood members for the "3" and "5" series must have a minimum thickness of 3½" for table loads to apply.
5. Wood members for the "4" and "7" series must have a minimum thickness of 5⅛" for table loads to apply.
6. Allowable loads are for a single connector. Uplift loads may be doubled when using two connectors. Connectors are required on both sides to achieve lateral loads in both directions. Lateral loads may not be doubled.
7. Lag screws of equal diameter (minimum 5" long) may be substituted for bolts in the beam with no reduction in load.

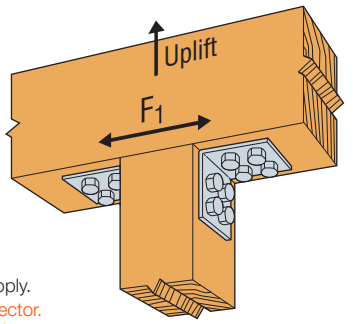

Typical HL55 Installation

Z

Clip

The Z clip secures 2x4 flat blocking between joists or trusses to support sheathing.

Material: See table

Finish: Galvanized

Installation:

- Use all specified fasteners; see General Notes.
- Z clips do not provide lateral stability. Do not walk on stiffeners or apply load until diaphragm is installed and nailed to stiffeners.

Codes: See p. 11 for Code Reference Key Chart

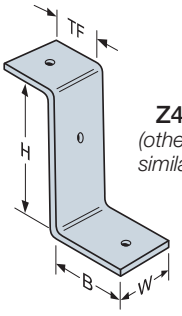

Z4 *(others similar)*

Model No.	Ga.	Dimensions (in.)				Fasteners[1] (Total) (in.)	DF/SP Allowable Download (100/115/125/160)	Code Ref.
		W	H	B	TF			
Z2	20	2 5/16	1½	1⅜	1⅜	(4) 0.148 x 1½	420	IBC, FL, LA
Z4	12	1½	3½	2⅛	1¾	(2) 0.162 x 3½	420	
Z28	28	2 5/16	1½	1⅜	1⅜	0.148 x 1½[1]	—	—
Z38	28	2 5/16	2½	1⅜	1⅜	0.148 x 1½[1]	—	
Z44	12	2½	3½	2	1⅜	(4) 0.162 x 3½	775	IBC, FL, LA

1. Z28 and Z38 do not have nail holes. Fastener quantity and type shall be per designer.
2. Z4 loads apply with a nail in the top and a nail in the seat.
3. For SPF/HF lumber, use 0.86 x DF/SP allowable loads.
4. **Fasteners:** Nail dimensions are listed diameter by length. See pp. 21–22 for fastener information.

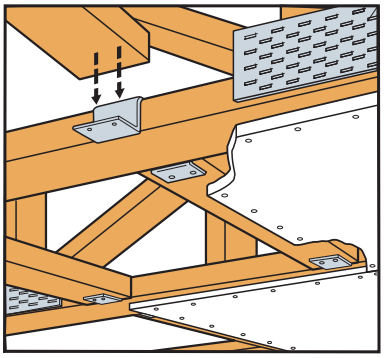

Typical Z2 Installation

C-C-2021 ©2021 SIMPSON STRONG-TIE COMPANY INC.

RCKW

Kneewall Connectors

This product is preferable to similar connectors because of (a) easier installation, (b) higher loads, (c) lower installed cost, or a combination of these features.

The Simpson Strong-Tie RCKW rigid connectors have been developed to resist overturning moment at the base of exterior kneewalls and parapets as well as interior partial-height walls. The RCKWS is a heavy 7-gauge stiffener that nests onto the RCKW clip. The screw holes and anchor holes in the stiffener line up with those in the RCKW clip, making fastener and anchor installation a snap. The RCKW clip and RCKWS stiffener are sold separately.

Features:

- Anchorage legs incorporate stiffened flanges, improving overturning moment resistance
- Large-diameter anchor hole accommodates ½"-diameter concrete screws and wedge anchors, such as the Titen HD® heavy-duty screw anchor and the Strong-Bolt® 2 wedge anchor
- For the RCKWS: 7-gauge stiffeners are secured to the RCKW clip with screws, optimizing overturning moment resistance and stiffness

Material: RCKW and RCKWS — 7 gauge

Coating: Galvanized

Installation:

- Use all specified screw fasteners.
- When using the RCKWS, secure the stiffener to the clip with the specified screw fasteners.
- Use all specified anchors. To achieve tabulated stiffness values, the installation torque for ½"-diameter anchors shall be at least 17 ft.-lb.
- For installation of the RCKW with 2x6 wood framing members, reference Simpson Strong-Tie engineering letter L-C-RCKW2X6WD at **strongtie.com**.

Codes: See p. 11 for Code Reference Key Chart

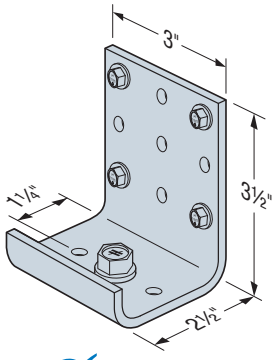

RCKW3
Screw Pattern No. 1
US Patent 9,938,709

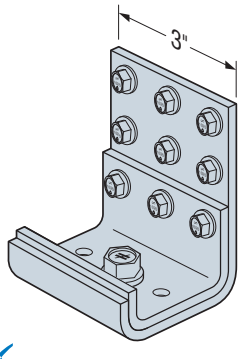

RCKW3 and RCKW3S
Screw Pattern No. 2

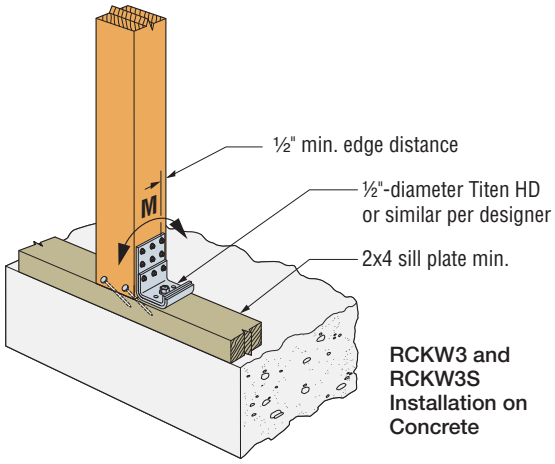

RCKW3 and RCKW3S Installation on Concrete

RCKW Allowable Loads for Wood Framing

Model No.	Screw Pattern No.	Fastener(s) to Post and Concrete	Nominal Post Size	Allowable Moment, M DF/SP (in.-lb.)	Anchor Tension, T, at Allow Moment, M (lb.)	Assembly Rotational Stiffness β (in.-lb./rad.)	Connector Rotational Stiffness β_c (in.-lb/rad.)
RCKW3	1	(4) #10 x 2½" SD (1) ½" Ø Anchor	(2) 2x4 or 4x4	2,165	1,695	102,800	111,300
RCKW3 RCKW3S	2	(9) #10 x 2½" SD (1) ½" Ø Anchor	(2) 2x4 or 4x4	3,725	3,635		

1. Designer is responsible for anchorage and framing member design.
2. Tabulated values are based on wood post connected to sill plate in accordance with the fastening schedule IBC Section 2304.
3. Multiply allowable moment and stiffness with an adjustment factor of 0.86 when attaching RCKW connector to SPF/HF wood post.
4. Anchor Tension, T, is the force in the anchor at allowable moment and is based on minimum concrete compressive strength, f'_c of 2500 spi.
5. Tabulated Allowable Moment values correspond to connector strength without consideration of serviceability. Designer must check out-of-plane deflections using tabulated rotational stiffness values.
6. Tabulated Assembly Rotational Stiffness is applicable for studs up to 38" tall and includes connector deflection, fastener slip and bending in the stud. For framing members greater than 38" tall, the designer must consider member deflection due to bending in the stud member in addition to the tabulated Connector Rotational Stiffness. See flier F-CF-RCKW at **strongtie.com** for calculation example.
7. Tabulated rotational stiffness values may be increased by dividing by a factor of 0.42 for deflection checks using component and cladding wind loads in lieu of reducing loads in accordance with 2012, 2015, 2018 and 2021 IBC Table 1604.3.
8. Built-up post (multiple members) must be fastened together to act as one unit to resist the applied load (excluding the connector fasteners). This must be determined by the designer.
9. Anchor bolt nut should be finger tight plus ⅓ to ½ turn with a hand wrench, with consideration given to possible wood shrinkage. Moisture content of wood sill plate shall not exceed 19% at time of installation.
10. **Fasteners:** SD screws are Simpson Strong-Tie® Strong-Drive® SD Connector screws. See pp. 21–22 for fastener information.

C-C-2021 ©2021 SIMPSON STRONG-TIE COMPANY INC.

T and L

Strap Tie

T and L strap ties are versatile utility straps. See Decorative Hardware for aesthetically pleasing options with black powder-coated paint.

Finish: Galvanized; see Corrosion Information, pp. 12–15; also available black powder coat (add PC to sku); contact Simpson Strong-Tie.

Codes: See p. 11 for Code Reference Key Chart

Model No.	Ga.	Dimensions (in.)			Fasteners			Code Ref.
		L	H	W	Nails (in.)	Bolts Qty.	Bolts Dia.	
55L	16	4¾	4¾	1¼	(5) 0.148 x 2½	—	—	—
66L	14	6	6	1½	(10) 0.162 x 2½	3	⅜"	
88L	14	8	8	2	(12) 0.162 x 2½	3	½"	
1212L	14	12	12	2	(14) 0.162 x 2½	3	½"	
66T	14	6	5	1½	(8) 0.162 x 2½	3	⅜"	
128T	14	12	8	2	(12) 0.162 x 2½	3	½"	
1212T	14	12	12	2	(12) 0.162 x 2½	3	½"	

1. These connectors are not load rated; may be installed with nails or bolts.
2. **Fasteners:** Nail dimensions are listed diameter by length. See pp. 21–22 for fastener information.

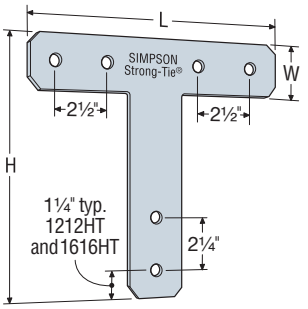

1212HT

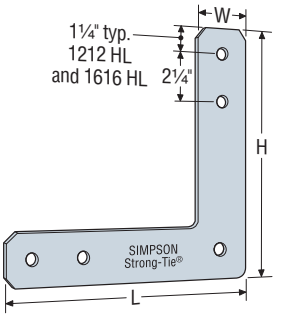

1212HL

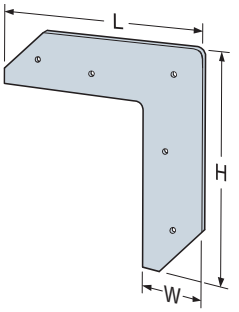

55L

These products are available with additional corrosion protection. For more information, see p. 14.

Model No.	Ga.	Dimensions (in.)			Minimum Bolt End and Edge Distances (in.)		Bolts		Allowable Loads[1,2]		Code Ref.
		W	H	L	d1	d2	Qty.	Dia.	Tension/Uplift (100/160)	F_1 (100/160)	
1212HL	7	2½	12	12	2½	4⅜	5	⅝"	1,535	565	—
1616HL	7	2½	16	16	2½	4⅜	5	⅝"	1,535	565	
1212HT	7	2½	12	12	2½	4⅜	6	⅝"	2,585	815	
1616HT	7	2½	16	16	2½	4⅜	6	⅝"	2,585	815	

1. 1212HL, 1616HL, 1212HT, and 1616HT are to be installed in pairs with bolts in double shear. A single part with bolts in single shear is not load rated.
2. Allowable loads are based on a minimum member thickness of 3½".
3. 1212HT and 1616HT loads assume a continuous beam.

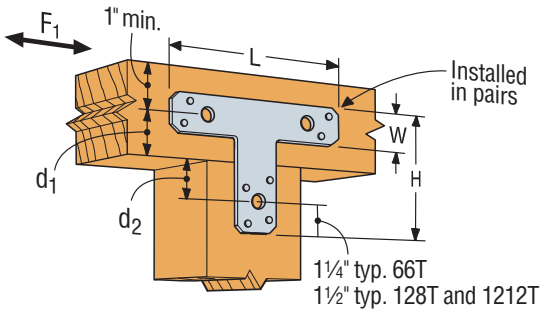

Typical T Installation

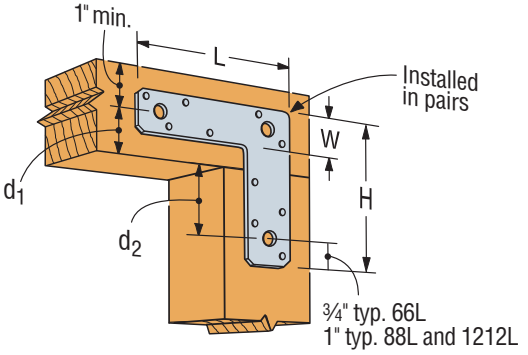

Typical L Installation

C-C-2021 ©2021 SIMPSON STRONG-TIE COMPANY INC.

Deck Tension Ties

DTT tension ties are safe, cost-effective connectors designed to meet or exceed code requirements for deck construction. These versatile DTT connectors are also load-rated as a holdown for light-duty shearwalls and braced-wall panel applications.

For new construction or to make an existing deck code-compliant, the DTT1Z can be used as a tension-tie to satisfy the 2015, 2018 and 2021 IRC provision for a 750 lb. lateral load connection to the house at four locations per deck. This code detail permits the lateral connection from the deck joists to be made to top plates, studs or headers within the supporting structure, which eliminates the need to access to the floor joists inside the home. The DTT1Z is available in a kit (DTT1Z-KT) that includes four DTT1Z connectors, four Strong-Drive® SDWH Timber-Hex HDG screws (SDWH27800G) and (26) #9 x 1½" Strong-Drive SD Connector screws.

The DTT1Z fastens to the narrow or wide face of a single 2x with Strong-Drive SD Connector screws or nails and accepts a ⅜" bolt, anchor bolt or lag screw (washer required) or can be installed with the Strong-Drive SDWH Timber-Hex HDG screw with an integral washer.

The DTT2 can be used to satisfy the IRC provision for a 1,500 lb. lateral load connection at two locations per deck. Additionally, the DTT2 has been tested and evaluated in deck guardrail post applications to resist the code-specified lateral forces at the top of railing assemblies. The DTT2 is also available with longer 2½" Strong-Drive SDS Heavy-Duty Connector screws (model DTT2Z-SDS2.5) to achieve higher loads when needed. The DTT2 fastens easily to the wide face of a single or double 2x using Strong-Drive SDS Heavy-Duty Connector screws (included) and accepts a ½"-diameter bolt or anchor bolt.

For guard post installations using Strong-Drive SDWS Timber screws, see technical bulletin T-F-GRDPSTRL.

Material: 14 gauge

Finish: DTT1Z/DTT2Z — ZMAX® coating; DTT2SS — stainless steel; see Corrosion Information, pp. 12–15

Installation:

- Use all specified fasteners; see General Notes
- A standard cut washer (included for DTT2) must be installed between the nut and the seat
- Strong-Drive SDS Heavy-Duty Connector screws (SDS) install best with a low-speed high-torque drill with a ⅜" hex head driver (Model BITHEXR38-R1)
- Strong-Drive SD Connector screws (SD) install with a ¼" hex head driver
- Strong-Drive SDWH Timber-Hex HDG screws install with a ⅜" hex head driver (Model BITHEXR38-R1)

Codes: See p. 11 for Code Reference Key Chart

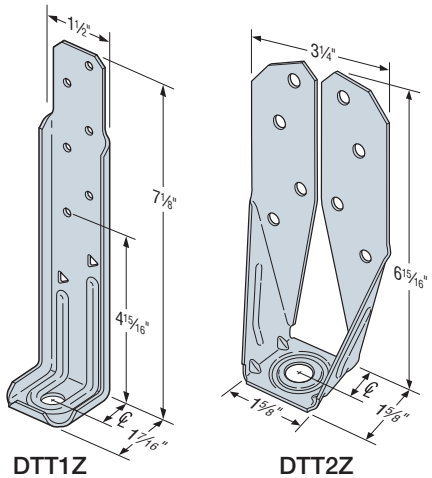

DTT1Z
US Patent 10,865,558

DTT2Z
US Patent 8,555,580

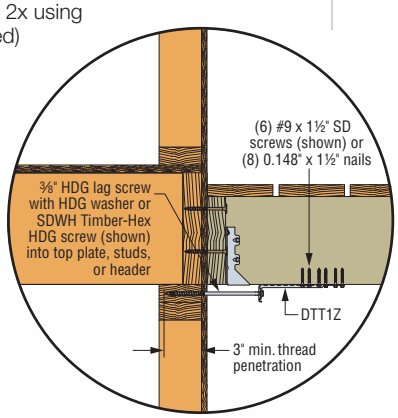

Typical DTT1Z Deck-to-House Lateral Load Connection
For more information on lateral load connections, see technical bulletin T-C-DECKLAT at **strongtie.com**

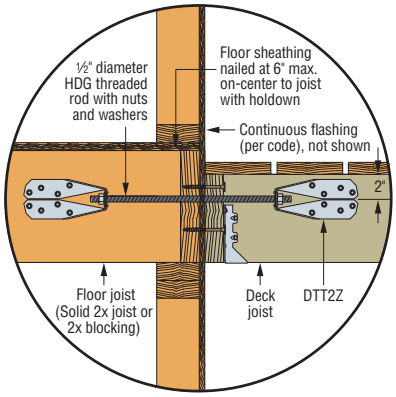

Typical DTT2Z Deck-to-House Lateral Load Connection
For more information on lateral load connections, see technical bulletin T-C-DECKLAT at **strongtie.com**

These products are available with additional corrosion protection. For more information, see p. 14.

SS For stainless-steel fasteners, see p. 21.

SD Many of these products are approved for installation with Strong-Drive® SD Connector screws. See pp. 348–352 for more information.

Model No.	CL	Anchor Diameter	Fasteners (in.)	Min. Wood Member Thickness (in.)	Allowable Tension Loads DF/SP (160)	Allowable Tension Loads SPF/HF (160)	Code Ref.
DTT1Z	¾	⅜[6] or SDWH[3]	(6) #9 x 1½" SD	1½	840	840	IBC, FL, LA
			(6) 0.148 x 1½		910	640[2]	
			(8) 0.148 x 1½		910	850	
SS DTT2Z/DTT2SS	13/16	½	(8) ¼ x 1½ SDS	1½	1,825	1,800	
				3	2,145	1,835	
SS DTT2Z-SDS2.5	13/16	½	(8) ¼ x 2½ SDS	3	2,145	2,105	

1. Allowable loads have been increased for wind or earthquake loading with no further increase allowed. Reduce where other loads govern.
2. DTT1Z installations with allowable loads below 750 lb. do not satisfy the 2015/2018/2021 IRC requirements for deck-to-house lateral load connections.
3. The Strong-Drive® SDWH Timber-Hex HDG screw with a minimum of 3" thread penetration into dry lumber has an allowable withdrawal load (160) of 1,380 lb. into SP, 1225 lb. into DF, and 1,020 lb. into SPF/HF.
4. Load values are valid if the product is flush with the end of the framing member or installed away from the end.
5. The guardrail post illustration above addresses an outward force on the guardrail. An additional DTT2 can be added at the lower bolt to address an inward force.
6. A ⅜" HDG round washer is required with the use of a lag screw.
7. **Fasteners:** Nail dimensions are listed diameter by length. SD and SDS screws are Simpson Strong-Tie® Strong-Drive screws. See pp. 21–22 for fastener information.

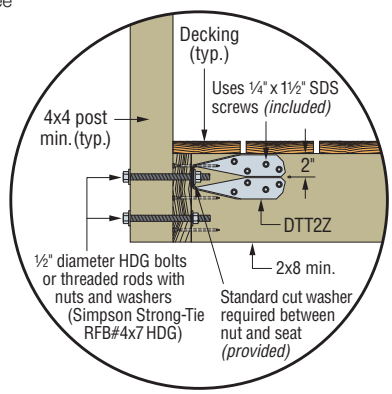

DTT2Z Installed for a Deck Guardrail Post
For more information on guardrail post connections, see technical bulletin T-C-GRDRLPST at **strongtie.com**

C-C-2021 ©2021 SIMPSON STRONG-TIE COMPANY INC.

BVLZ

Brick Veneer Ledger Connector

The BVLZ brick veneer ledger connector provides a new code-compliant, tested solution for safely adding a deck to an existing house with brick veneer exterior. It attaches a wood ledger to the framing through the veneer. This patent-pending connector kit provides a viable alternative to building a free standing deck, and it installs without having to remove or replace large sections of brick veneer.

The BVLZ brick veneer ledger connector kit includes a steel ledger plate, a compression strut, two 14" Strong-Drive® SDWH Timber-Hex HDG tension screws and six Strong-Drive SD Connector shear screws. An installation template is provided with the four-part kit. The BVLZ connector is designed so the two tension screws pass through the vertical mortar into the structural framing, and the compression strut transfers compression forces from the ledger plate to the rim joist. The system enables the ledger to hang freely without bearing on the brick veneer.

Features:

- Allows for drilling through the mortar joints
- Enables inspection/approval by building departments in a retrofit construction application
- Accommodates a wide range of air gaps and brick sizes
- Minimizes penetrations through existing exterior water barriers

Material: 12 gauge

Finish: Connectors — ZMAX® coating; fasteners — SDWH27, Class 55 HDG; SD9 double-barrier coating

Installation:

- Use all specified fasteners. All fasteners supplied with connector.
- Complete installation instructions provided with each kit.
- Installation video available on **strongtie.com/bvlz**.
- Measure where each ledger plate will be positioned on the veneer.
- At first location, align the center hole of installation guide with the mortar joint in the brick veneer. Drill through the center hole using a hammer drill and a 1⅛" masonry drill bit.
- Drill two 40º upward-angled holes using the guide and 1⅛"-diameter drill bit. Repeat for each plate location.
- Mark the placement of each plate on the ledger board. Using installation guide, drill 1⅛"-diameter hole horizontally through the center hole and mark the two angled-hole locations. Then drill two 1⅛"-diameter angled holes at each marked location on the ledger.
- Thread the compression strut into the back of the ledger plate to the end of the threads. Install the left-most and right-most plates on the ledger and attach each with six Strong-Drive SD Connector screws (provided).
- Place the ledger board against the brick veneer and install two 14" Strong-Drive SDWH Timber-Hex HDG screws in each of the plates. Push downward on the drill while driving to ensure the screws are snug against the gusset channel and maintain a 40° angle while screwing into dry, 1½"-wide minimum rim.
- Rotate compression struts with pliers until they bear tightly against the framing. Install the remaining BVLZ connectors along the length of the ledger.

Codes: See p. 11 for Code Reference Key Chart

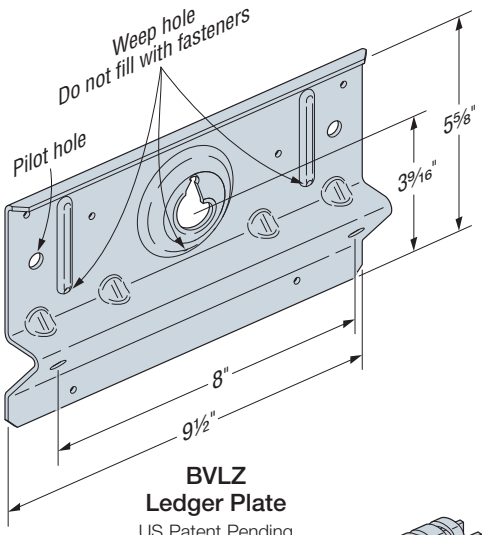

BVLZ Ledger Plate
US Patent Pending

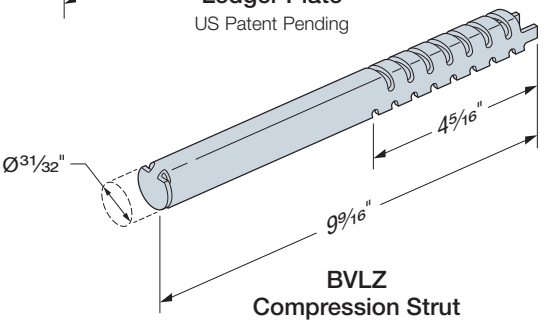

BVLZ Compression Strut

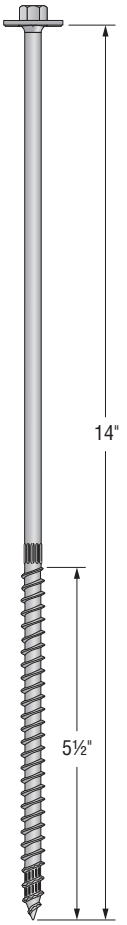

Strong-Drive® SDWH Timber-Hex HDG Screw
(included)

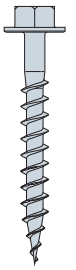

Strong-Drive® SD Connector Screw
(included)

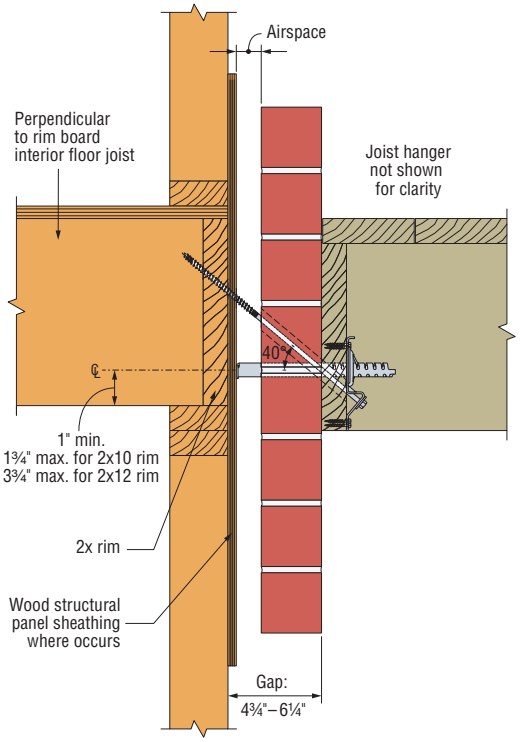

Typical BVLZ Installation

Visit **strongtie.com/bvlz** for more information and to watch an installation video.

C-C-2021 ©2021 SIMPSON STRONG-TIE COMPANY INC.

Brick Veneer Ledger Connector (cont.)

Model No.	Fasteners		Rim		Allowable Downloads (100/115)		Code Ref.
					Compression Strut Bearing Surface		
	Rim	Ledger	Size	Species	Rim Board	WSP	
BVLZ	(2) SDWH271400G	(6) #9 x 1½" SD	2x	DF	505	410	IBC, FL, LA
				SP	455		
				SPF/HF	345		

1. Rim board must be designed to receive applied moment equal to: (Gap) x (Applied Load)
2. When cross-grain bending or cross-grain tension cannot be avoided in the Rim, additional reinforcement to resist such forces shall be considered by the designer.
3. The BVLZ does not replace the need for lateral load resistance per 2018/2021 IRC Section R507.9.2.
4. Wet service factor has been applied to BVLZ connection to deck ledger.
5. Weatherproof ledger as required by code.
6. 2x is 1½" wide, minimum. Load values for sawn lumber are applicable to 1½" wide structural composite lumber rim with equivalent specific gravity.
7. Wood Structural Panel (WSP) is OSB or plywood with a maximum thickness of 19/32".
8. For prescriptive spacing, visit **strongtie.com/bvlz**.
9. **Fasteners:** SD screws are Simpson Strong-Tie® Strong-Drive® SD Connector screws. SDWH screws are Simpson Strong-Tie Strong-Drive Timber-Hex HDG screws. See pp. 21–22 for fastener information.

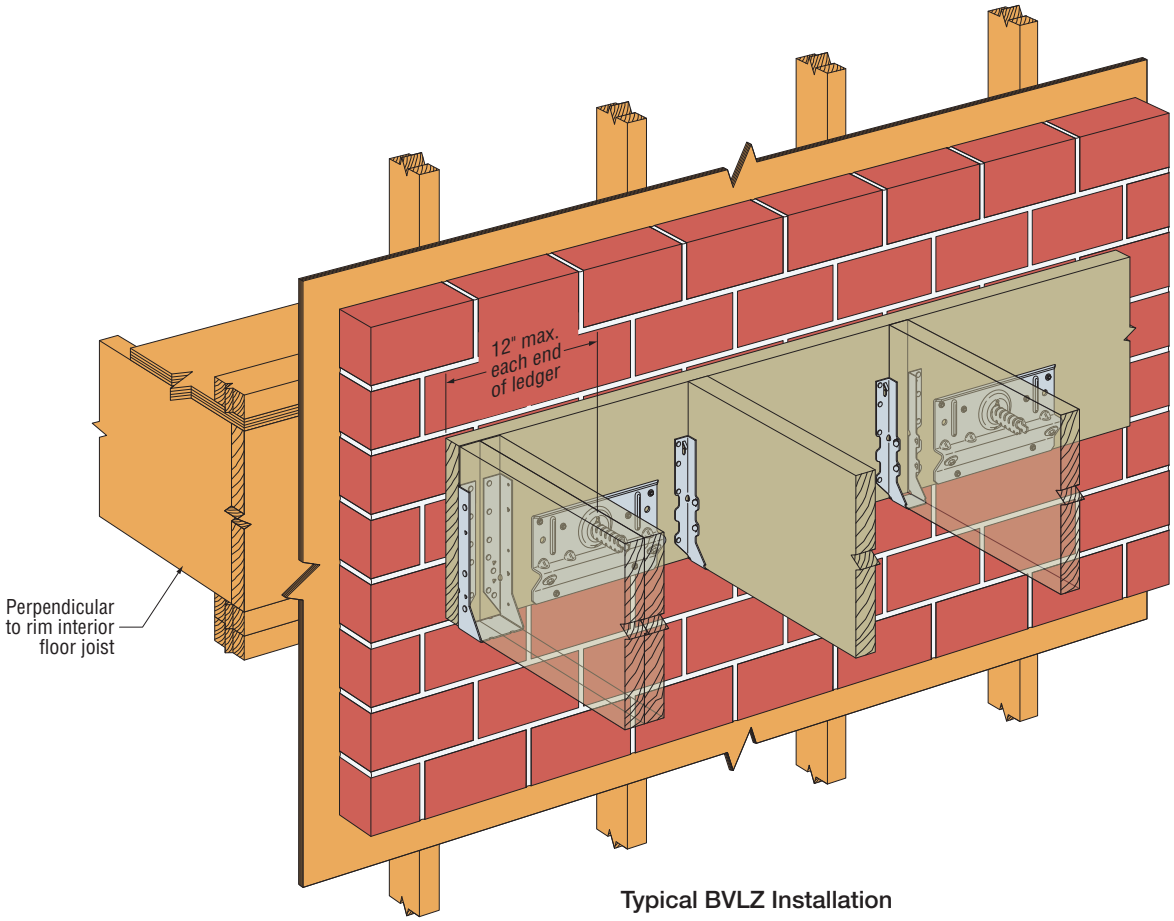

Typical BVLZ Installation

Visit **strongtie.com/bvlz** for more information and to watch an installation video.

C-C-2021 ©2021 SIMPSON STRONG-TIE COMPANY INC.

LSC

Adjustable Stringer Connector

The LSC adjustable stair-stringer connector offers a versatile, concealed connection between the stair stringer and the carrying header or rim board while replacing costly framing. Field slopeable to all common stair stringer pitches, the LSC connector is suitable for either solid or notched stringers.

Features:

- Replaces additional framing and toe-nailing.
- May be installed flush with the top of the carrying member (typically suitable for 2x10 or 2x12 header / rim board) or lower on the face (typically suitable for a 2x12 header / rim board).
- Interchangeable for left or right applications.
- LSCZ features a ZMAX® coating for additional corrosion protection. Suitable for interior and some exterior applications. LSCSS is made from stainless steel for higher exposure environment. See **strongtie.com/info** for more information.

Material: 18 gauge

Finish: LSCZ — ZMAX® coating; LSCSS — stainless steel

Installation:

- Use all specified fasteners, see table.
- Before fastening, position the stair stringer with the LSC on the carrying member to verify where the bend should be located.
- The fastener that is installed into the bottom edge of the stringer must go into the second-to-last hole.
- When installed on 1 5/16" LVL or a 1¼" LSL stringer, additional items that will not affect the structural performance of the LSC, but should be considered, include the following:
  - LSC stringer flange will protrude ¼" from face of stringer. As such, it is recommended the LSC be installed with the tabs positioned to the outside of the stringer.
  - 1½" fasteners installed into 1¼" LSL stringer will protrude from the opposite side.

Codes: See p. 11 for Code Reference Key Chart

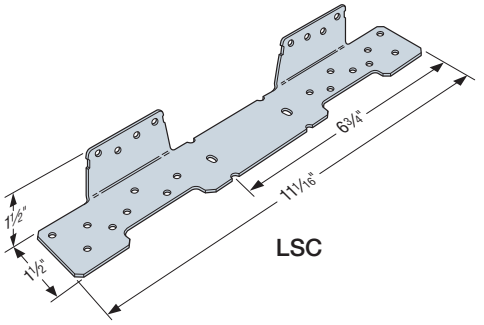

LSC

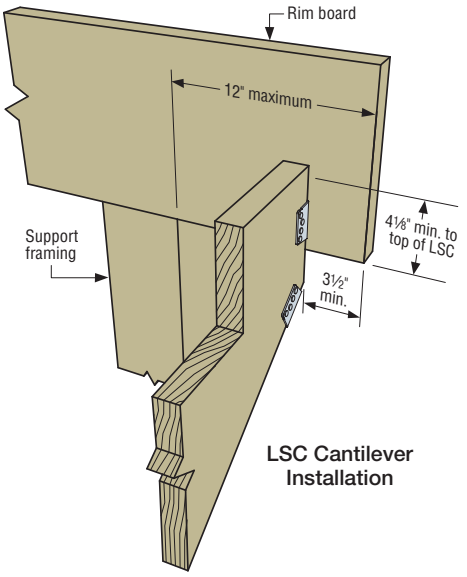

LSC Cantilever Installation

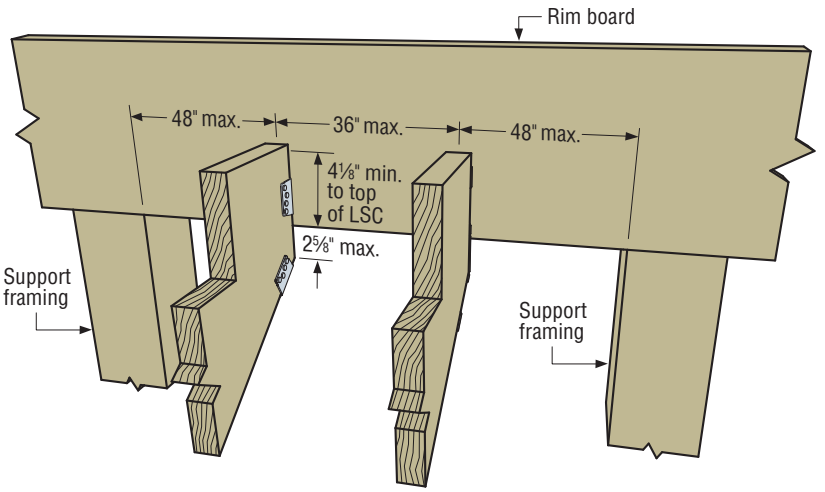

Standard LSC Installation

C-C-2021 ©2021 SIMPSON STRONG-TIE COMPANY INC.

LSC

Adjustable Stringer Connector (cont.)

These products are available with additional corrosion protection. For more information, see p. 14.

SS For stainless-steel fasteners, see p. 21.

SD Many of these products are approved for installation with Strong-Drive® SD Connector screws. See pp. 348–352 for more information.

Model No.	Rim Board Installation	Fastener Schedule			DF/SP Allowable Loads		SPF/HF Allowable Loads		Code Ref.
		Rim Board	Stringer Wide Face	Stringer Narrow Face	Floor (100)	Snow (115)	Floor (100)	Snow (115)	
LSCZ LSCSS (SS)	Supported	(8) 0.148 x 1½	(8) 0.148 x 1½	(1) 0.148 x 1½	945	960	815	825	IBC, FL, LA
	Supported	(8) #9 x 1½" SD	(8) #9 x 1½" SD	—	865	865	670	670	
	Standard	(8) 0.148 x 1½	(8) 0.148 x 1½	(1) 0.148 x 1½	755	755	650	650	
	Standard	(8) #9 x 1½" SD	(8) #9 x 1½" SD	(1) #9 x 1½" SD	755	755	650	650	
	Cantilever	(8) 0.148 x 1½	(8) 0.148 x 1½	(1) 0.148 x 1½	460	460	395	395	
	Cantilever	(8) #9 x 1½" SD	(8) #9 x 1½" SD	—	545	545	445	445	

1. When installed on minimum 1 5/16" LVL or minimum 1¼" LSL stringers, allowable loads for DF/SP shall apply.
2. When cross-grain bending or cross-grain tension cannot be avoided in the members, mechanical reinforcement to resist such forces shall be considered by the designer.
3. #9 x 1½" Strong-Drive® SD Connector screws may be substituted for 0.148" x 1½" nails to achieve published nail values if the extra screw is installed in the narrow face of the stringer.
4. **Fasteners:** Nail dimensions are listed diameter by length. SD screws are Simpson Strong-Tie® Strong-Drive SD Connector screws. See pp. 21–22 for fastener information.

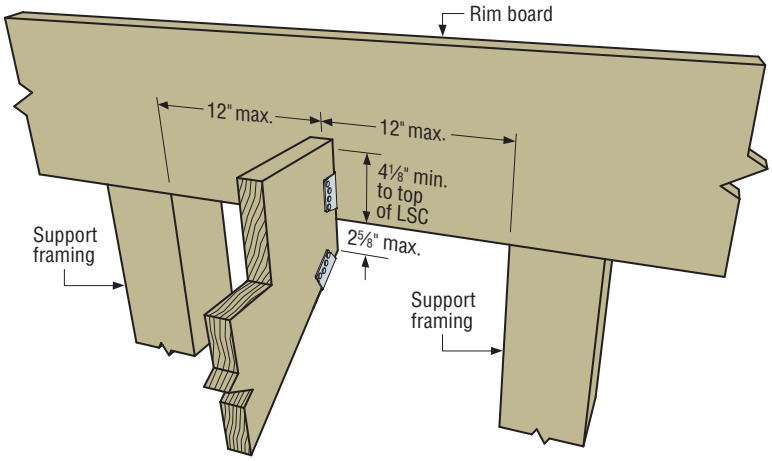

Supported LSC Installation

DPTZ

Deck Post Tie

The DPTZ deck post tie products are used to attach 2x4 (DPT5Z) or 4x4 (DPT7Z) vertical posts to the side of stringers, rims or other wood members.

Material: 14 gauge

Finish: ZMAX® coating; see Corrosion Information, pp. 12–15

Installation:

- Use specified HDG fasteners; see General Notes
- Typically installed in pairs
- Install with two ⅜" through bolts into side member (lag screws not permitted) and (5) 0.148" x 1½" nails to post for DPT5Z or (5) 0.148" x 3" for DPT7Z

SD Many of these products are approved for installation with Strong-Drive® SD Connector screws. See pp. 348–352 for more information.

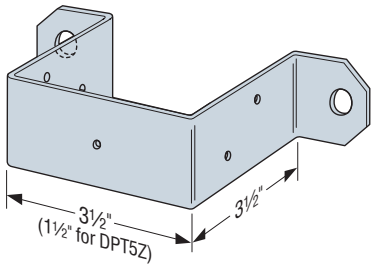

DPT7Z
(DPT5Z similar)

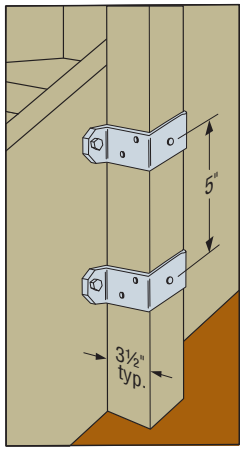

Typical DPT7Z Stairway Installation
(DPT5Z similar)

C-C-2021 ©2021 SIMPSON STRONG-TIE COMPANY INC.

DJT14Z

Deck Joist Tie

The DJT14Z deck joist tie is designed to attach 2x deck joists to the side of 4x or larger support posts. The DJT14Z can be installed with either nails or bolts.

Material: 14 gauge

Finish: ZMAX® coating; see Corrosion Information, pp. 12–15

Installation:

- Use specified HDG fasteners; see General Notes
- Recommended: install on post first
- Minimum 2x4 joist and 4x4 post

Codes: See p. 11 for Code Reference Key Chart

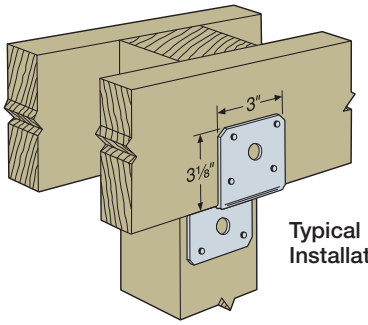

Typical DJT14Z Installation

These products are available with additional corrosion protection. For more information, see p. 14.

SS For stainless-steel fasteners, see p. 21.

SD Many of these products are approved for installation with Strong-Drive® SD Connector screws. See pp. 348–352 for more information.

Model No.	Fasteners			Allowable Loads				Code Ref.
	Nails	Bolts		Nails		Bolts		
		Qty.	Dia.	Floor (100)	Roof (125)	Floor (100)	Roof (125)	
SS DJT14Z	(8) 0.162 x 3½	2	⅝	1,160	1,320	1,325	1,325	IBC, FL, LA

1. Loads are for one DJT14Z.
2. Roof loads are 125% of floor loads unless limited by other criteria. Floor loads may be adjusted for load durations according to the code provided they do not exceed those in the roof column.
3. Install bolts or nails as specified by designer. Bolt and nail values may not be combined.
4. **Fasteners:** Nail dimensions are listed diameter by length. See pp. 21–22 for fastener information.

TA

Staircase Angle

For use in structurally sound staircase framing. The TA eliminates costly conventional notching.

Material: 12 gauge

Finish: TA9Z/TA10Z — ZMAX® coating; TA9SS/TA10SS — stainless steel. See Corrosion Information, pp. 12–15.

Order: May be ordered as kits with model numbers TA9ZKT and TA10ZKT. Each kit includes two ZMAX TAs and ¼" x 1½" Strong-Drive SDS Heavy-Duty Connector screws.

Codes: See p. 11 for Code Reference Key Chart

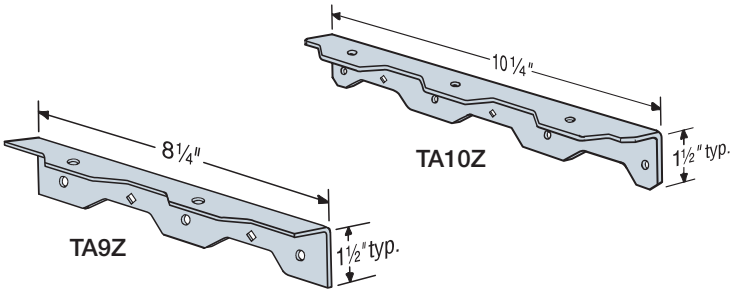

These products are available with additional corrosion protection. For more information, see p. 14.

SS For stainless-steel fasteners, see p. 21.

Model No.	Fasteners		Allowable Downloads DF/SP (100)	Code Ref.
	Stringer	Tread		
SS TA9Z	(2) ¼" x 1½" SDS	(3) ¼" x 1½" SDS	500	—
	(3) ¼" x 1½" SDS	(2) ¼" x 1½" SDS	750	
SS TA10Z	(3) ¼" x 1½" SDS	(4) ¼" x 1½" SDS	750	
SS TA10Z	(4) ¼" x 1½" SDS	(3) ¼" x 1½" SDS	1,000	

1. Loads may be adjusted for other durations according to the code.
2. **Fasteners:** SDS screws are Simpson Strong-Tie® Strong-Drive SDS Heavy-Duty Connector screws. See pp. 21–22 for fastener information.

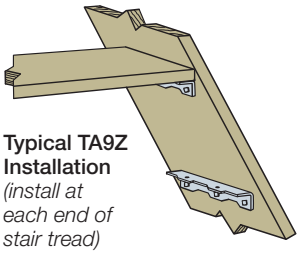

Typical TA9Z Installation *(install at each end of stair tread)*

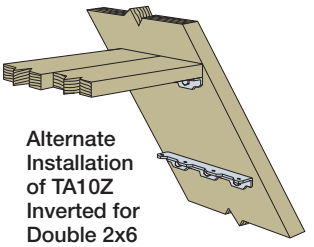

Alternate Installation of TA10Z Inverted for Double 2x6 Treads

C-C-2021 ©2021 SIMPSON STRONG-TIE COMPANY INC.

ML

Angle

The ML angle combines strength and versatility through the use of Strong-Drive® SDS Heavy-Duty Connector screws. Fastener holes are staggered to minimize wood splitting and opposing hole pattern allows for back-to-back installation without fastener interference.

Material: 12 gauge

Finish: MLZ — ZMAX® coating; MLSS — stainless steel. See Corrosion Information, pp. 12–15.

Installation:

- Use all specified fasteners; see General Notes
- ¼" x 1½" Strong-Drive SDS Heavy-Duty Connector screws are not provided with the angle
- Use stainless-steel fasteners with stainless connectors

Codes: See p. 11 for Code Reference Key Chart

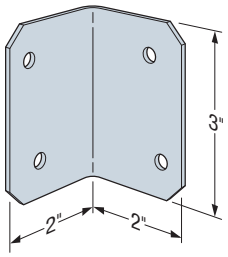

ML23Z

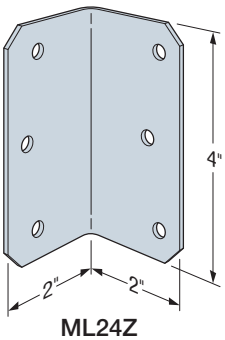

ML24Z
(ML26Z similar)

These products are available with additional corrosion protection. For more information, see p. 14.

SS For stainless-steel fasteners, see p. 21.

	Model No.	H (in.)	Connector Quantity	SDS Fasteners (Total)	DF/SP Allowable Loads				SPF/HF Allowable Loads				Code Ref.
					(100)	(115)	(125)	(160)	(100)	(115)	(125)	(160)	
SS	ML23Z	3	1	(4) ¼" x 1½"	405	405	405	405	310	310	310	310	IBC, FL, LA
			2	(8) ¼" x 1½"	865	865	865	865	660	660	660	660	
SS	ML24Z	4	1	(6) ¼" x 1½"	595	595	595	595	450	450	450	450	
			2	(12) ¼" x 1½"	1,500	1,635	1,635	1,635	1,080	1,240	1,240	1,240	
SS	ML26Z	6	1	(8) ¼" x 1½"	1,000	1,075	1,075	1,075	720	830	900	935	
			2	(16) ¼" x 1½"	2,000	2,145	2,145	2,145	1,440	1,625	1,625	1,625	
SS	ML28Z	8	1	(10) ¼" x 1½"	1,250	1,280	1,280	1,280	900	970	970	970	
			2	(20) ¼" x 1½"	2,500	2,665	2,665	2,665	1,800	2,020	2,020	2,020	
SS	ML210Z	10	1	(12) ¼" x 1½"	1,285	1,285	1,285	1,285	970	970	970	970	
			2	(24) ¼" x 1½"	2,930	2,930	2,930	2,930	2,160	2,220	2,220	2,220	

1. Stainless steel versions achieve the same load as ZMAX versions listed in the table.
2. **Fasteners:** SDS screws are Simpson Strong-Tie® Strong-Drive SDS Heavy-Duty Connector screws. See pp. 21–22 for fastener information.

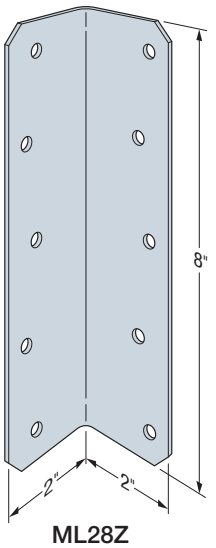

ML28Z

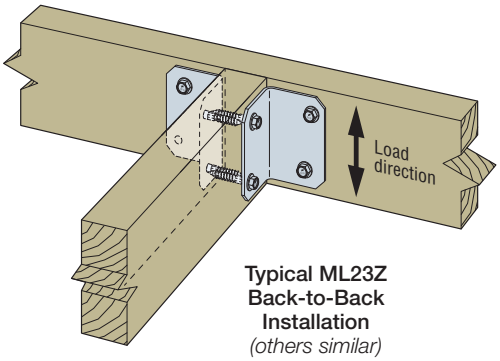

Typical ML23Z Back-to-Back Installation
(others similar)

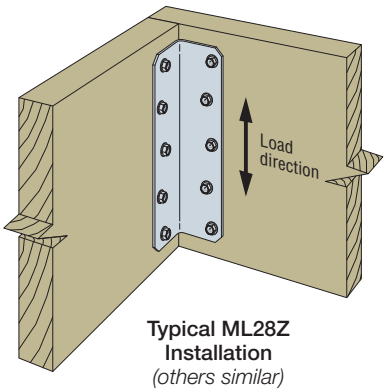

Typical ML28Z Installation
(others similar)

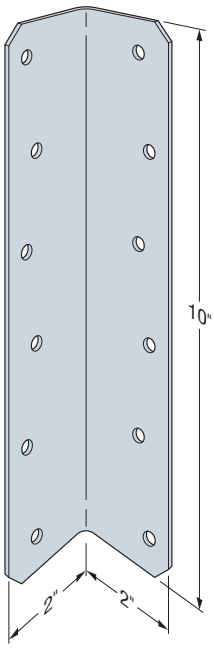

ML210Z

C-C-2021 ©2021 SIMPSON STRONG-TIE COMPANY INC.

KBS1Z

Knee-Brace Stabilizer

The KBS1Z knee-brace stabilizer makes a structural connection between knee bracing and columns or beams to help stabilize free-standing structures and comply with many prescriptive deck bracing requirements such as AWC's DCA6 Prescriptive Residential Wood Deck Construction Guide. Factory-formed at a 45° angle and easily installed with nails, the KBS1Z braces 2x, 4x and 6x in line post-to-beam configurations. Check with your local building department for deck bracing requirements.

Material: 16 gauge

Finish: ZMAX® coating

Installation:

- Use all specified fasteners; see General Notes.
- For installations at an angle other than 45°, bend KBS1Z along slots to desired angle. Bend one time only.
- **Knee Brace:**
  - Cut braces at desired angle
  - Bend KBS1Z to desired angle if required
  - Install fasteners to secure in place
  - For equal-width members, install (2) KBS1Z on each end of brace (see connection type 1)
  - For 2x knee brace, install single KBS1Z on each end of brace (see connection type 2)
- **Beam-to-Post:**
  - Install in pairs; see illustrations 3 or 4 for quantity and configuration
  - Part used as a column cap; does not replace a knee brace

Codes: See p. 11 for Code Reference Key Chart

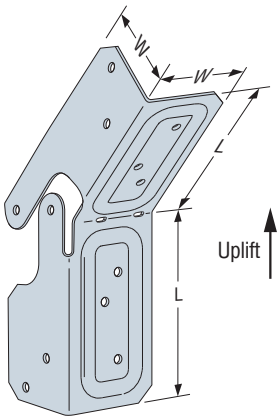

KBS1Z
US Patent
9,045,895

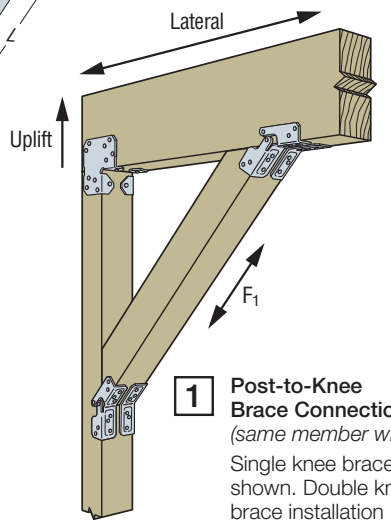

1 **Post-to-Knee Brace Connection** *(same member width)*
Single knee brace shown. Double knee brace installation similar.

These products are available with additional corrosion protection. For more information, see p. 14.

SD Many of these products are approved for installation with Strong-Drive® SD Connector screws. See pp. 348–352 for more information.

Model No.	Dimensions (in.) W	Dimensions (in.) L	Type of Connection	Connectors per Joint	Fasteners Each Connector	Direction of Load	C-C-2019 Allowable Loads (160) In-Service Moisture Content ≤ 19% DF/SP	≤ 19% SPF/HF	> 19% DF/SP	> 19% SPF/HF	Code Ref.
KBS1Z	1½	3	1	2	(12) 0.131 x 2½	F_1 – Brace angle = 45°	1,175	1,010	1,055	860	IBC, FL, LA
						F_1 – Brace angle = 30° or 60°	835	720	835	720	
			2	1	(12) 0.131 x 1½	F_1 – Brace angle = 45°	630	540	470	385	
						F_1 – Brace angle = 30° or 60°	510	440	395	330	
			3	4	(12) 0.131 x 2½	Uplift	1,160	1,000	1,160	1,000	
						Lateral	1,725	1,480	1,725	1,480	
			4	2	(12) 0.131 x 2½	Uplift	540	465	540	465	
						Lateral	485	420	430	370	
				4		Uplift	900	775	900	775	
						Lateral	1,270	1,095	1,270	1,095	

1. Allowable loads have been increased for wind or earthquake loading with no further increase allowed. Reduce where other loads govern.
2. For braces installed at intermediate angles, allowable loads may be interpolated between loads listed for brace angle = 45° and those listed for brace angle = 30° or 60°.
3. #9 x 1½" Strong-Drive® SD Connector screws may be substituted for fasteners specified with no load reduction.
4. **Fasteners:** Nail dimensions are listed diameter by length. See pp. 21–22 for fastener information.

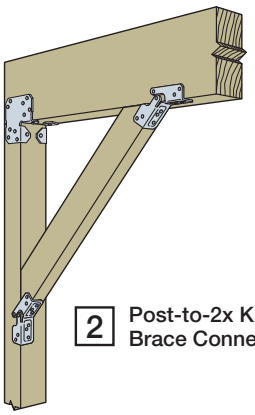

2 **Post-to-2x Knee Brace Connection**

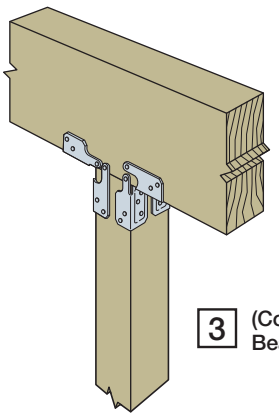

3 **(Continuous) Beam-to-Post**

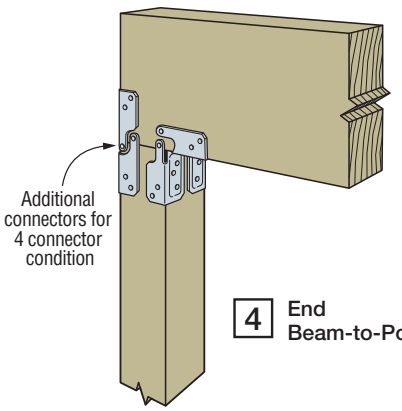

4 **End Beam-to-Post**

C-C-2021 ©2021 SIMPSON STRONG-TIE COMPANY INC.

FB/FBR/FBFZ

Fence Rail Brackets

FB and FBR fence brackets make the connection between fence rails and posts simple and strong. Eliminates the need for toe nails or screws. Clean, versatile connections make planning and building fences, deck/porch railings and louvers easier and faster.

The patent-pending FBFZ flat rail bracket offers a more concealed install look. In addition to fence-rail connections, the FBFZ can also be used for handrail attachments for porch and deck railings that are 30" or closer to ground level.

Material: See table

Finish: FB/FBFZ/FBR — galvanized; FB24SS — stainless steel. Some products available in ZMAX® coating. See Corrosion Information, pp. 12–15.

Installation:

- FB/FBFZ — Install using 0.131" x 1½" nails or #9 x 1½" Strong-Drive® SD Connector screws.
- FB24R/FB24Z/FB24SS — Install with three fasteners into the rail and two fasteners into the supporting member.
- FB26 — Install with three fasteners into both the rail and the supporting member.
- FBR24Z — Sized for 0.148" x 1½" nails or #9 x 1½" Strong-Drive® SD Connector screws. Install with three fasteners into the rail and two fasteners into the supporting member.
- For FBFZ installation, position the bracket on the end of the 2x4 rail. Install fasteners into all three holes. Slide the rail into place against the post or other wood supporting member. Install one fastener through both the top and bottom holes into the supporting member.

Codes: See p. 11 for Code Reference Key Chart

These products are available with additional corrosion protection. For more information, see p. 14.

SD Many of these products are approved for installation with Strong-Drive SD Connector screws. See pp. 348–352 for more information.

	Model No.	Ga.	Member Size	Dimensions (in.)			Code Ref.
				W	H	B	
SS	FB24Z	20	2x4	1 9/16	3 3/8	3/4	—
	FB24R	20	2x4 RGH	2	3 3/8	3/4	
	FB26	18	2x6	1 9/16	5	1 1/2	
	FBR24Z	18	2x4	1 9/16	2 7/16	1 1/2	
	FBFZ	18	2x4	1 9/16	4 3/4	7/32	

1. FB26 has an allowable load for F_1 of 365 lb.
2. FBR24Z: R = rail (not rough).

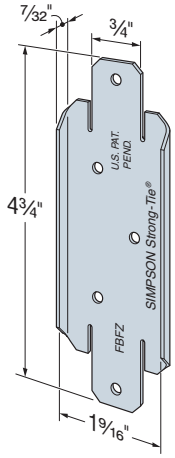

FBFZ
US Patent Pending

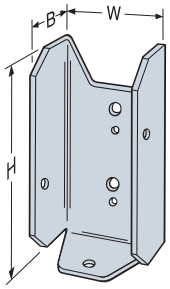

FB24Z
(FB24R similar)

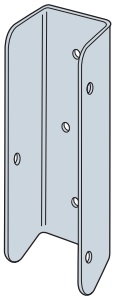

FB26

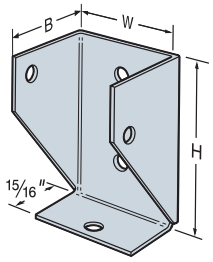

FBR24Z

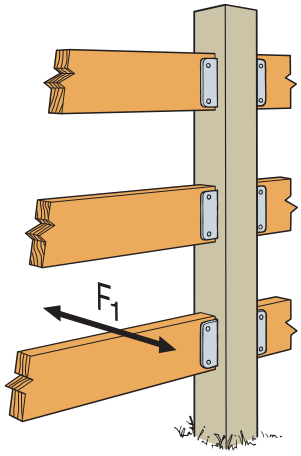

Typical FB26 Fencing Installation

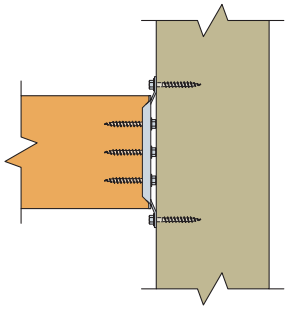

Tabs on either end of the FBFZ bracket can be slightly bent to adjust for the rail length.

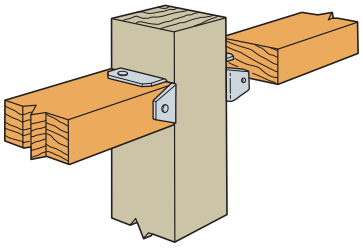

Typical FB24Z Installation

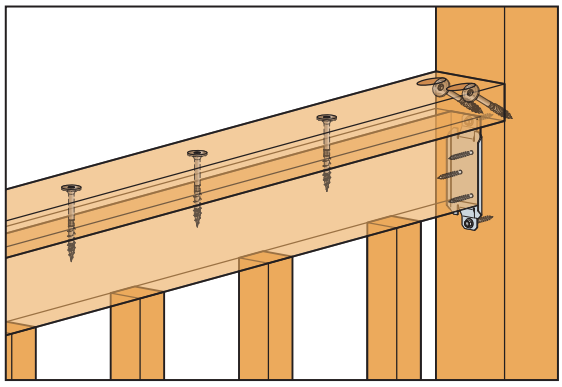

Typical FBFZ Handrail Installation
(3" SDWS Timber screws shown)

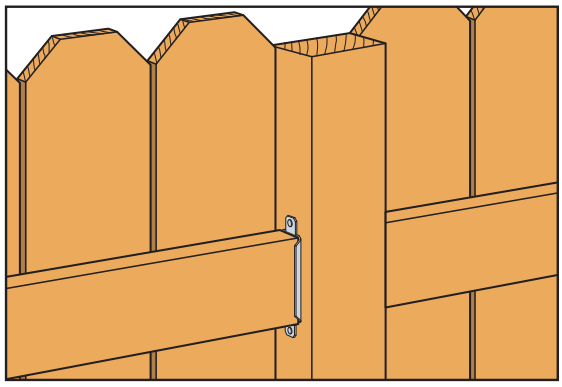

Typical FBFZ Fence Rail Installation

C-C-2021 ©2021 SIMPSON STRONG-TIE COMPANY INC.

Pipe Grip Ties®

Our popular PGT pipe grip tie series now includes more models to meet a variety of conditions for attaching wood fence rails to metal fence posts and eliminating rotted and failed wood posts. PGT is suitable for standard applications as well as corners and splices.

- PGTIC2Z-R is an interior corner pipe grip tie.
- PGT1.5Z-R is for 1½" pipe (1⅞" outside diameter). PGT2-R and PGT2Z-R are for 2" pipe (2⅜" outside diameter).
- PGT2A is for 2" pipe (2⅜" outside diameter).
- PGT2E is for 2" pipes and features a two-piece design that provides a solid connection between fence stringer and post.

Material: PGT2A — 14 gauge; all others — 12 gauge

Finish: PGTA, PGT2-R, PGT2E — galvanized; PGTIC2Z, PGT1.5Z, PGT2Z-R — ZMAX®

Installation:

- Use all specified fasteners; see General Notes.
- PGTIC2Z-R to Post — Install two set screws (supplied) with ⅜ socket in predrilled holes.
- PGTIC2Z-R to Rails — Use ¼" x 1½" Strong-Drive® SDS Heavy-Duty Connector screws (not supplied). PGTIC set screws are included.
- Install on vertical pipes, offsetting corners to allow for the correct rail alignment.
- Use three to four PGTs per pipe; line up to stringline.
- Fasten PGT with ¼" hex-head bolt (supplied).
- PGT attaches to rails with four ¼" x 1½" Strong-Drive SDS Heavy-Duty Connector screws (not supplied). See p. 347 for Strong-Drive SDS Heavy-Duty Connector screw information. ¼" lag screws may be used. Follow the code requirements for predrilling.
- Field bend PGT flanges to fit corner and angled conditions (bend one time only).
- Nail or screw fence boards to rails.
- PGT2E-R50: Sold as full carton with (50) attachment plates, (50) front straps and (55) ¼" diameter x ¾" long hex-head bolts.
- PGTSCREW-R10 is a pack of (10) ¼" x 2½" replacement hex-head screw bolts for the PGT2A, PGT2-R, PGT2Z-R and PGT1.52Z-R.

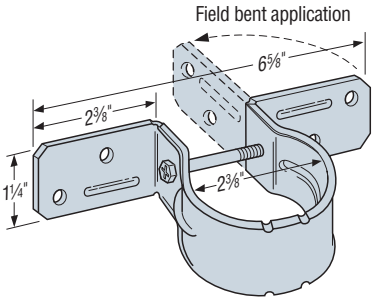

PGT2A

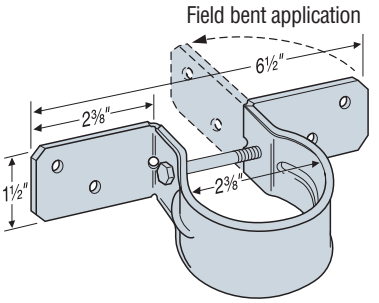

PGT2Z-R
(PGT1.5Z-R similar)

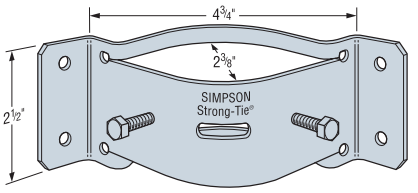

PGTIC2Z-R

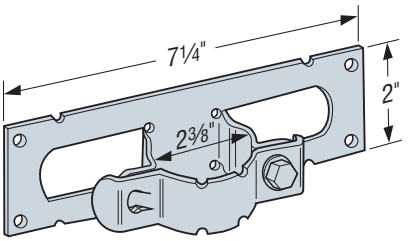

PGT2E
US Patent 8,220,781

These products are available with additional corrosion protection. For more information, see p. 14.

Model No.	Pipe Diameter	Ga.	Width (in.)	Height (in.)	Fasteners	
					Wood Rail SDS ¼" x 1½" (not supplied)	Metal Post
PGT1.5Z	1⅞" OD	12	6½	1½	4	(1) bolt supplied
PGT2A	2⅜" OD	14	6⅝	1¼	4	(1) bolt supplied
PGT2E		12	7¼	2	4	(1) bolt supplied
PGTIC2Z		12	4¾	2½	4	(2) set screws supplied
PGT2-R		12	6½	1½	4	(1) bolt supplied
PGT2Z-R		12	6½	1½	4	(1) bolt supplied

1. **Fasteners:** SDS screws are Simpson Strong-Tie® Strong-Drive SDS Heavy-Duty Connector screws. See pp. 21–22 for fastener information.

C-C-2021 ©2021 SIMPSON STRONG-TIE COMPANY INC.

PGT®

Pipe Grip Ties®

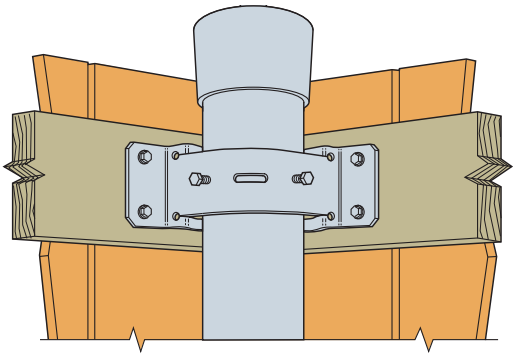

Typical PGTIC2Z-R
Fence Installation

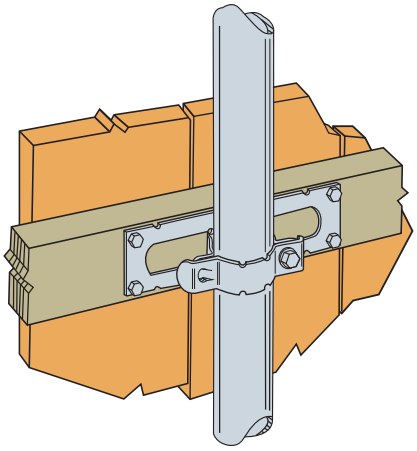

Typical PGT2E Installation

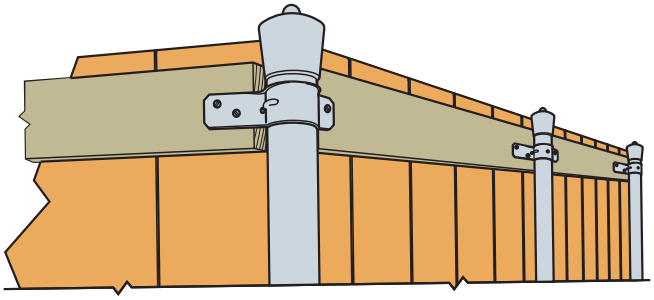

Typical PGT2Z-R Fence Installation

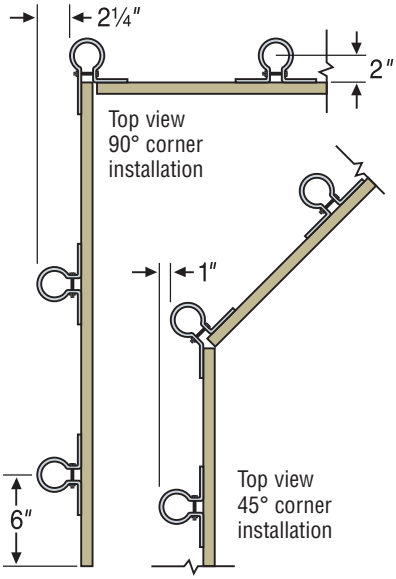

Corner Installation
Top View

C-C-2021 ©2021 SIMPSON STRONG-TIE COMPANY INC.

E-Z Base™/E-Z Mender™/E-Z Spike™

Fence Products

Replacing an entire fence can be an expensive and difficult task. Simpson Strong-Tie offers a line of products designed to help make reinforcing fence posts easy and economical. The E-Z Base™, E-Z Mender™ and E-Z Spike™ offer simple solutions for all types of fence post projects.

E-Z Spike (Model No. FPBS44)

- Allows easy installation of 4x4 wood posts without digging holes or pouring concrete
- Can be used for a variety of applications where quick-to-install posts are needed

E-Z Mender (Model No. FPBM44E)

- Allows easy repair of rotted or damaged 4x4 wood posts installed in concrete or dirt
- Reinforces weakened wood posts without having to replace the post or the concrete
- Installs with #9 x 1½" Strong-Drive® SD Connector screws
- Sold individually; use in pairs

E-Z Base (Model No. FPBB44)

- Allows easy installation of 4x4 wood posts on existing concrete

Material: 12 gauge

Finish: Black powder coat

Installation:

- See flier F-C-EZFPP at **strongtie.com**
- Attach post to E-Z Spike with (4) ¼" Strong-Drive SDS Heavy-Duty Connector screws or ¼" HDG lag screws; attach E-Z Base with (8) screws. Attach post to E-Z Mender using (6) HDG nails or screws per part
- Post bases do not provide adequate resistance to prevent rotation about the base and therefore are not recommended for non-top-supported installations such as fences or unbraced carports

SD Many of these products are approved for installation with Strong-Drive® SD Connector screws. See pp. 348–352 for more information.

Warning: The E-Z Base and E-Z Spike products should not be used for solid fences in excess of 4' in height or that are unprotected from wind forces. These products are not rated for uplift loads, and should not be used with posts for overhead structures or any other structure that requires resistance to wind uplift loads. Notwithstanding the terms of the Limited Warranty, Simpson Strong-Tie does not guarantee, represent or warrant that this product will prevent or reduce damage caused by corrosion, or any seismic, wind, atmospheric, or other load-producing event.

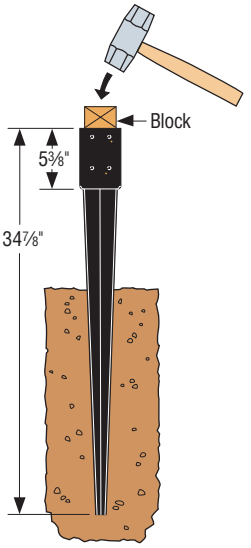

E-Z Spike™ (FPBS44)

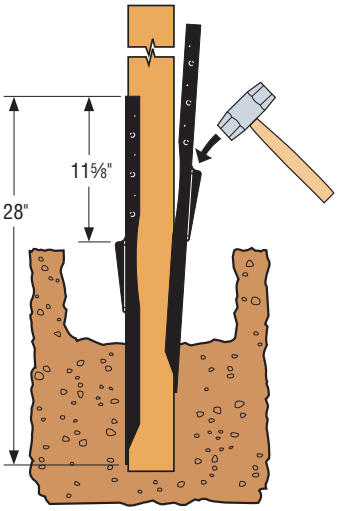

E-Z Mender™ (FPBM44E)

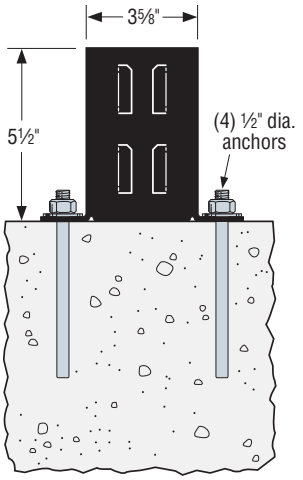

E-Z Base™ (FPBB44)

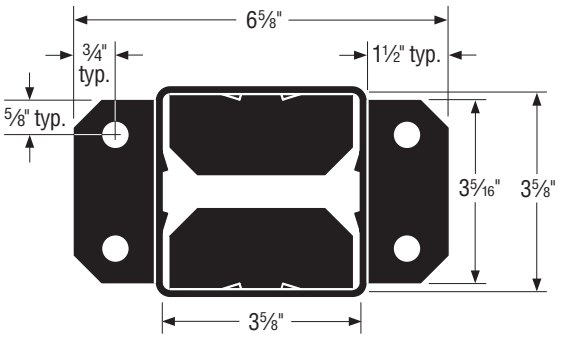

E-Z Base™ (FPBB44) Top View

C-C-2021 ©2021 SIMPSON STRONG-TIE COMPANY INC.

CTS218

Compression and Tension Strap

The CTS218 is designed to repair wood members such as top plates, studs and trusses, and it handles both tension and compression loads. The unique rolled edges of the strap allow it to span gaps as wide as 4½", and its 1½" width enables installation on the narrow face of 2x lumber.

- Tested specifically for top/bottom plate repair with various multi-strap configurations
- Meets the requirements of the IBC and IRC for repairing top plates that have been cut or notched to accommodate plumbing or HVAC ductwork

Material: 14 gauge

Finish: Galvanized

Installation:

- Use all specified fasteners; see General Notes.
- One-sided installations — install one or two CTS straps on the same side of the member.
- Two-sided installation — install CTS straps on opposite sides of member. For three-part installations, install two parts on one side, one part on opposite side.

Codes: See p. 11 for Code Reference Key Chart

- IBC – 2012 2308.9.8; 2015/2018/2021 2308.5.8

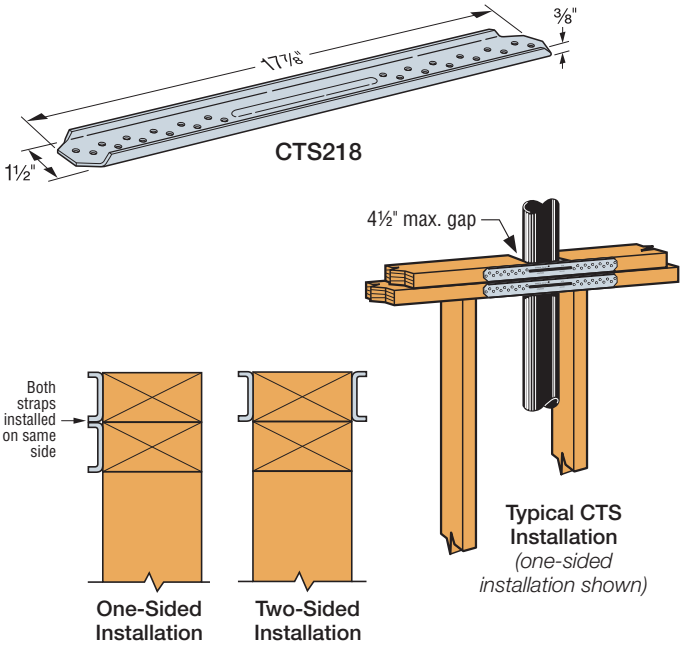

SD Many of these products are approved for installation with Strong-Drive® SD Connector screws. See pp. 348–352 for more information.

Model No.	Strap Qty.	Installation	Fasteners (Per Strap) (in.)	Allowable Loads DF/SP		Allowable Loads SPF/HF		Code Ref.
				Compression (160)	Tension (160)	Compression (160)	Tension (160)	
CTS218	1	One sided	(24) 0.148 x 1½	1,125	2,270	970	1,970	IBC, FL, LA
	2	One sided		2,250	4,535	1,935	3,900	
	2	Two sided		2,515	4,535	2,165	3,900	
	3	Two sided		3,310	6,805	2,845	5,850	
	4	Two sided		5,035	9,070	4,330	7,800	
	1	One sided	(24) #9 x 1½" SD	1,175	2,510	1,010	2,160	
	2	One sided		2,350	5,020	2,020	4,315	
	2	Two sided		2,735	5,020	2,350	4,315	
	3	Two sided		4,130	7,530	3,550	6,475	
	4	Two sided		5,470	10,040	4,700	8,635	

1. Allowable loads have been increased for wind or earthquake loading with no further increase allowed. Reduce where other loads govern.
2. Fastener quantities are for a single strap.
3. Maximum gap between wood members is 4½".
4. **Fasteners:** Nail dimensions are listed diameter by length. SD screws are Simpson Strong-Tie® Strong-Drive SD Connector screws. See pp. 21–22 for fastener information.

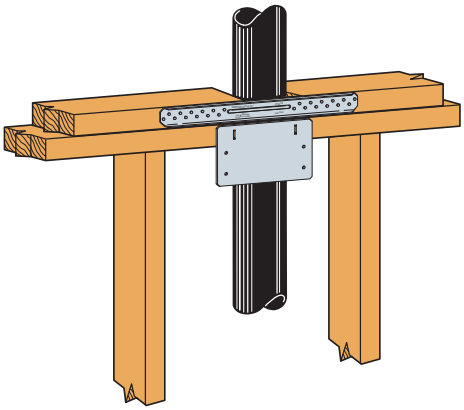

Single CTS218 and PSPN58 Installation

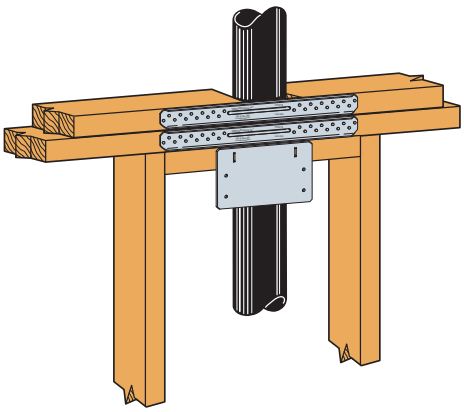

Double CTS218 and PSPN58 Installation

C-C-2021 ©2021 SIMPSON STRONG-TIE COMPANY INC.

NS/PSPNZ

Nail Stoppers

Nail stoppers help prevent nails from piercing pipes and electrical lines. Installed over utilities that pass through framing members.

PSPN516Z and PSPN58Z protecting shield plate nail stoppers meet IRC, IBC and the International Plumbing Code. PSPN516Z meets structural and protection requirements with one strap.

Material: NS — 14 gauge; PSPN — 16 gauge

Finish: Galvanized; PSPN — ZMAX® coating. See Corrosion Information, pp. 12–15.

Installation:

- PSPN516Z — 0.162" x 3½" nails (see footnote 2 below).
- Other models — 0.131" x 2½" nails or prongs.
- For more information refer to flier F-C-REPAIRPRO at **strongtie.com**.

Codes: See p. 11 for Code Reference Key Chart

PSPN516Z at top plates

- International Residential Code® — 2015/2018/2021 P2603.2.1, R602.6.1 and M1308.2
- International Building Code® — 2015/2018/2021 2308.5.8
- International Plumbing Code — 2015/2018/2021 305.8

PSPN516Z at bottom plate.

- International Building Code® — 2015/2018/2021 2308.5.8
- International Plumbing Code — 2015/2018/2021 305.8

PSPN58Z at top plates and bottom plate.

- International Plumbing Code — 2015/2018/2021 305.8
- International Residential Code® — 2015/2018/2021 P2603.2.1 and M1308.2

NS1 and NS2 — Nail stops to protect supply lines from drywall nails or screws.

- International Residential Code® — 2015/2018/2021 M1308.2 and P2603.2.1
- National Electric Code — 2014/2017 300.4
- International Plumbing Code — 2015/2018/2021 305.8
- International Mechanical Code — 2015/2018/2021 305.5

These products are available with additional corrosion protection. For more information, see p. 14.

SD Many of these products are approved for installation with Strong-Drive® SD Connector screws. See pp. 348–352 for more information.

Model No.	W (in.)	L (in.)	Fasteners (Total)	Allowable Tension Load DF/SP	Allowable Tension Load SPF/HF	Code Ref.
			Nails (in.)	(160)	(160)	
PSPN58Z	5	8	—	—	—	PR
PSPN516Z	5	16 5/16	(12) 0.162 x 3½	1,320	1,145	
			(16) 0.162 x 3½	1,760	1,530	
			(24) 0.162 x 3½	2,640	2,290	

1. PSPN516Z sill plate installation requires (12) 0.162" x 3½" nails. Double top plate installation requires (16) or (24) 0.162" x 3½" nails.
2. To meet the prescriptive IBC requirement, 0.135" dia. x 3½" long nails may be used. Allowable tension load is 0.75 of table loads when installed with 0.135" dia. x 3½" nails. To meet the 2012–2021 IRC prescriptive requirement, 0.148" dia. x 1½" long nails may be used.

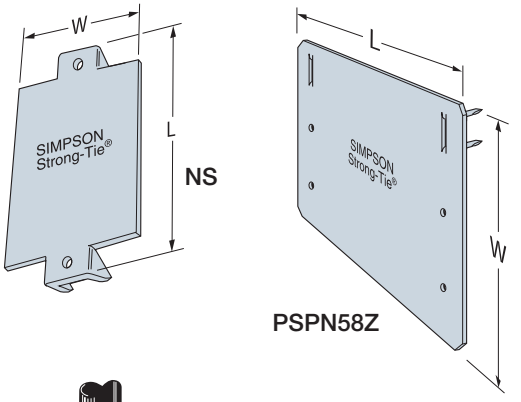

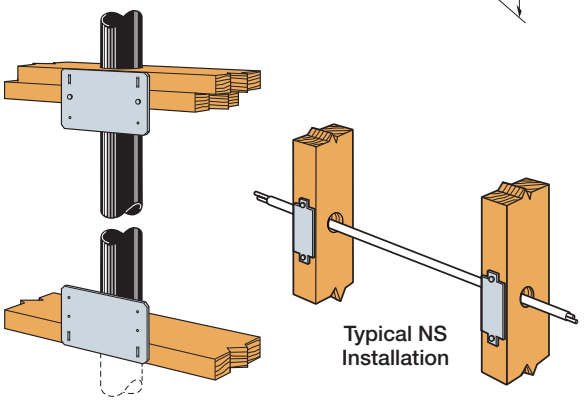

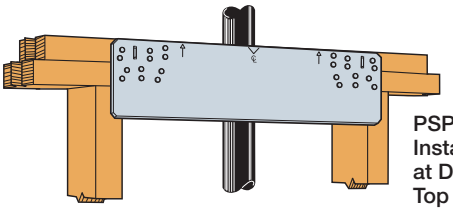

PSPN516Z Installation at Double Top Plates

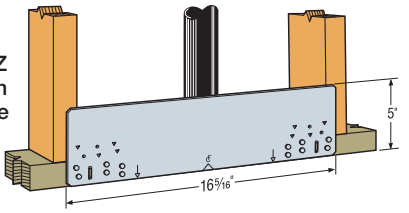

PSPN516Z Installation at Sill Plate

Model No.	W (in.)	L (in.)	Code Ref.
NS1	1½	3	PR
NS2	1½	6	

C-C-2021 ©2021 SIMPSON STRONG-TIE COMPANY INC.

RPS

Strap Ties

The RPS meets IBC, IRC and City of Los Angeles code requirements for HVAC and pipes in walls.

Finish: Galvanized. Some products available in ZMAX® coating. See Corrosion Information, pp. 12–15.

Installation:

- Use all specified fasteners; see General Notes
- Use RPS22 or RPS28 (16 gauge) to reinforce top plate.
- Use RPS18Z, RPS22Z or RPS28Z (16-gauge ZMAX) to reinforce sill plate.

Codes: See p. 11 for Code Reference Key Chart

- International Residential Code® — 2012/2015/2018/2021 R602.6.1
- International Building Code® — 2012 2308.9.8; 2015/2018/2021 2308.5.8

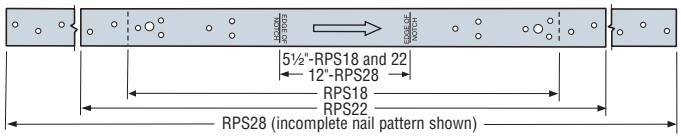

RPS

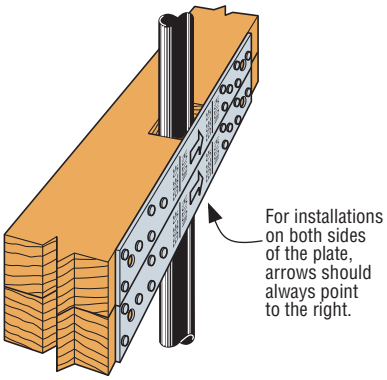

Typical RPS Installation
(only one strap may be necessary to meet IRC requirements)

These products are available with additional corrosion protection. For more information, see p. 14.

Model No.	Ga.	Dimensions (in.) W	Dimensions (in.) L	Notch Width (in.)	Fasteners (Total) Nails (in.)	Allowable Tension Loads (DF/SP) (160)	Allowable Tension Loads (SPF/HF) (160)	Code Ref.
RPS18	16	1½	18 5/16	≤ 5½	(12) 0.162 x 2½	1,345	1,165	IBC, FL, LA
RPS22		1½	22 5/16	≤ 5½	(12) 0.162 x 2½	1,345	1,165	
		1½	22 5/16		(16) 0.162 x 2½	1,790	1,550	
RPS28		1½	28 5/16	≤ 12	(12) 0.162 x 2½	1,345	1,165	
		1½	28 5/16		(16) 0.162 x 2½	1,600	1,550	

1. Loads have been increased for wind or earthquake loading, with no further increase allowed. Reduce where other loads govern.
2. To meet the prescriptive IRC requirement, 0.148" x 1½" nails may be used.
3. **Fasteners:** Nail dimensions are listed diameter by length. See pp. 21–22 for fastener information.

C-C-2021 ©2021 SIMPSON STRONG-TIE COMPANY INC.

HSS/SS

Stud Shoes

Stud shoes reinforce studs notched in construction. They are not a total replacement of removed material. Installs over pipe up to 2⅜" outside diameter.

HSS stud shoes provide tension load capacity as well as increased compression loads. Flared flange provides greater strength.

Material: 16 gauge

Finish: Galvanized

Installation:

- Use all specified fasteners; see General Notes
- HSS — Bend flanges at 90° angle during installation, then bend back and screw into position (screws included)
- Bend flanges one cycle only

Codes: See p. 11 for Code Reference Key Chart

- International Residential Code® — 2012/2015/2018/2021 R602.6 and P2603.2.1
- International Building Code® — 2012 2308.9.10 and 2308.9.11; 2015/2018/2021 2308.5.9 and 2308.5.10
- International Plumbing Code — 2012/2015/2018/2021 305.6

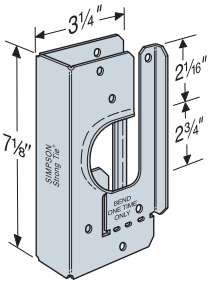

HSS

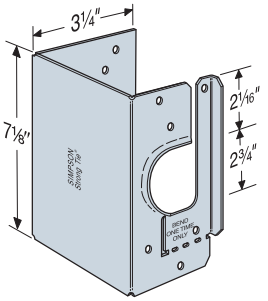

HSS2-3

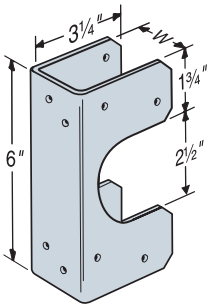

SS

SD Many of these products are approved for installation with Strong-Drive® SD Connector screws. See pp. 348–352 for more information.

Model No.	Stud Size	W (in.)	Fasteners (in.)	Allowable Loads[1] DF/SP Compression Floor (100)	Compression Roof (125)	Tension	Code Ref.
SS1.5	2x	1⁹⁄₁₆	(12) 0.148 x 1½	500	500	—	IBC, FL, LA
SS2.5	3x	2⁹⁄₁₆	(12) 0.148 x 1½	730	740	—	
SS3	(2) 2x	3¹⁄₁₆	(12) 0.148 x 3	730	830	—	
SS4.5	(3) 2x	4⁹⁄₁₆	(14) 0.148 x 3	840	840	—	
HSS2-SDS1.5	2x	1⁹⁄₁₆	(12) ¼ x 1½ SDS	1,165	1,165	1,025	
HSS2-2-SDS3	(2) 2x	3	(12) ¼ x 3 SDS	1,165	1,165	1,025	
HSS2-3-SDS3	(3) 2x	4⁹⁄₁₆	(12) ¼ x 3 SDS	990	990	960	
HSS4-SDS3	4x	3⁹⁄₁₆	(12) ¼ x 3 SDS	1,205	1,205	1,025	

1. Roof loads are 125% of floor loads unless limited by other criteria. Floor loads may be adjusted for load durations according to the code provided they do not exceed those in the roof column.
2. **Fasteners:** Nail dimensions are listed diameter by length. SDS screws are Simpson Strong-Tie® Strong-Drive SDS Heavy-Duty Connector screws. See pp. 21–22 for fastener information.

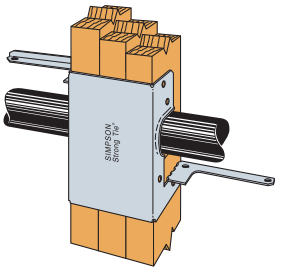

Step 1
Install HSS (HSS2-3 shown) over stud with flanges bent at a 90° angle.

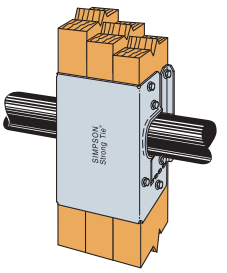

Step 2
Bend HSS (HSS2-3 shown) flanges one time only. Screw into position.

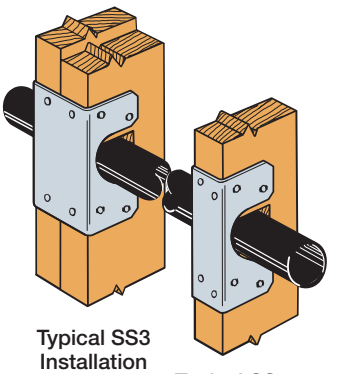

Typical SS3 Installation

Typical SS1.5 Installation

C-C-2021 ©2021 SIMPSON STRONG-TIE COMPANY INC.

WB/WBC/TWB/RCWB

Wall Bracing

Simpson Strong-Tie wall bracing products offer effective options to resist racking during construction. While these straps are not designed to replace a structural panel shearwall load-carrying component, the RCWB and WB/WBC may be used as a cost-effective and faster-installation alternative for the IRC 1x4 let-in wall brace requirements.

The WBC (coiled WB) multiple product dispenser pack weighs less than 40 pounds, making storage and transportation easy. WB106C — 15 pieces per roll, WB126C — 12 pieces per roll, WB143C — 10 pieces per roll.

The RCWB features a rolled edge (the TWB has two rolled edges) for extra strength and safety.

Material: WB and WBC — 16 gauge; TWB — 22 gauge; RCWB — 20 gauge

Finish: TWB galvannealed; all others galvanized

Installation:

- Use all specified fasteners; see General Notes.
- Install nails through the flat face of the TWB.

WB and WBC:

- Install in "X" pairs or in opposing "V" fashion.
- Use with 16" or 24" o.c. 2x4 (min.) studs.

RCWB and TWB:

- Use with 16" o.c. studs.
- Use minimum of 2x4 studs with TWB.
- Use minimum of 2x6 studs with RCWB (2x4 min. for interior, non-bearing wall).
- Establish a run-line using the bracing as a straight edge. Single cut a saw kerf ⅝" deep (TWB) or 1⅛" deep (RCWB) along the run line. If the wall is pre-framed on the floor, place the part into the saw kerf, and put one nail into the top plate. Tilt the wall up and plumb before nailing off top plate, bottom plate and studs according to the nailing schedule.

Codes: See p. 11 for Code Reference Key Chart

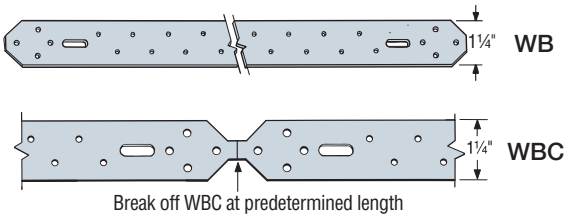

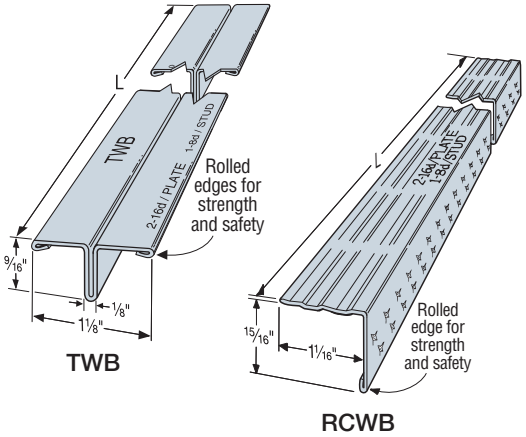

Model No.	L	Wall Height and Angle	Fasteners (in.)		Code Ref.
			Plates	Studs	
WB106	9'-5⅝"	8' @ 60	(2) 0.162 x 3½	(1) 0.131 x 2½	IBC, FL, LA
WB106C	9'-6"	8' @ 60	(2) 0.162 x 3½	(1) 0.131 x 2½	
TWB10	9'-9"	8' @ 55	(2) 0.162 x 3½	(1) 0.131 x 2½	
RCWB12	11'-4"	8' @ 45	(2) 0.162 x 3½	(1) 0.131 x 2½	
WB126	11'-4⅜"	8' @ 45	(2) 0.162 x 3½	(1) 0.131 x 2½	
WB126C	11'-4¾"	8' @ 45	(2) 0.162 x 3½	(1) 0.131 x 2½	
TWB12	11'-4"	8' @ 45	(2) 0.162 x 3½	(1) 0.131 x 2½	
RCWB12	11'-4"	9' @ 53	(2) 0.162 x 3½	(1) 0.131 x 2½	
WB126	11'-4⅜"	9' @ 53	(2) 0.162 x 3½	(1) 0.131 x 2½	
WB126C	11'-4¾"	9' @ 53	(2) 0.162 x 3½	(1) 0.131 x 2½	
TWB12	11'-4"	9' @ 53	(2) 0.162 x 3½	(1) 0.131 x 2½	
WB143C	14'-3"	10' @ 45	(2) 0.162 x 3½	(1) 0.131 x 2½	
RCWB14	14'-2"	10' @ 45	(2) 0.162 x 3½	(1) 0.131 x 2½	
TWB14	14'-2"	10' @ 45	(2) 0.162 x 3½	(1) 0.131 x 2½	

1. **Fasteners:** Nail dimensions are listed diameter by length. See pp. 21–22 for fastener information.

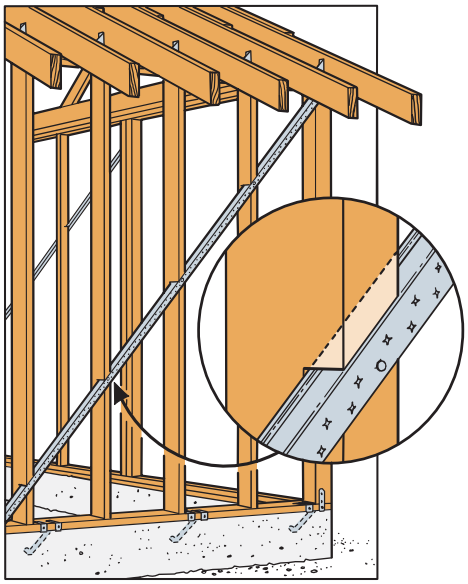

Typical RCWB Installation

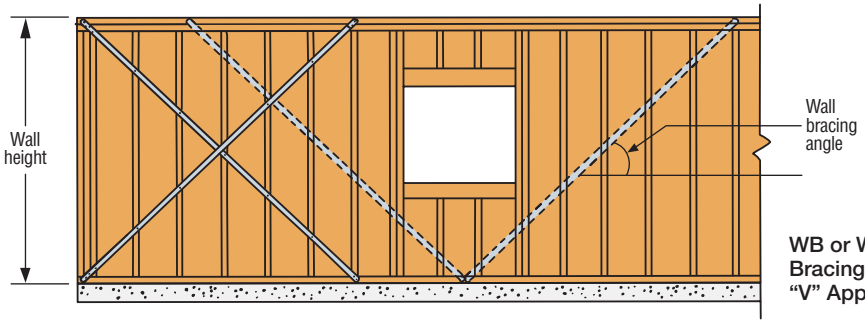

WB or WBC Wall Bracing "X" and "V" Applications

C-C-2021 ©2021 SIMPSON STRONG-TIE COMPANY INC.

Bridging

NCA — Nailless installation eliminates callbacks for nail squeaks. Designed for secure grip before the drive-home blow, and deeper prong penetration. Precision-formed into a rigid "V" section.

TB — Tension-type bridging with maximum nailing flexibility. Use just two of the seven nail holes at each end.

LTB — Staggered nail pattern accommodates 2x8 and 2x10 joists. Use just two of the six nail holes at each end. LTB40 has rigid prongs that install easily into the joist, and embossments that allow crisp bends.

Material: LTB — 22 gauge; NCA and TB — 20 gauge (except NCA2x12-16 — 18 gauge)

Finish: Galvanized

Installation: • Support floor joists with a depth-to-thickness ratio of six or more with bridging at intervals not exceeding 8'. If span is greater than 8', install on 2x8 or larger joists. If span is greater than 16', use more than one pair.

- Tension bridging works only in tension, so must be used in cross pairs.
- Install bridging tightly; loose installation may allow floor movement.
- NCA may be installed before or after sheathing, from the top or bottom. Simply locate the bend line approximately 1" from the joist edge.
- NCA has nail holes in one end for use if a prong is bent during installation. Fully seat nails (0.131" x 1½") if they are used; otherwise, they may lead to squeaks.
- TB requires two 0.148" x 1½" fasteners per end.
- LTB requires two 0.113" x 2" nails per end.

Codes: See p. 11 for Code Reference Key Chart

Code Reference: IRC 2012/2015/2018/2021 — R502.7.1, R802.8.1

Tension Bridging for I-Joists

Joist Height (in.)	Joist Spacing (in.)								
	12	16	19.2	24	30	32	36	42	48
9½	TB20	TB27	TB27	TB30	TB36	TB36	TB42	TB48	TB54
10	TB20	TB27	TB27	TB30	TB36	TB36	TB42	TB48	TB54
11⅞	TB20	TB27	TB27	TB30	TB36	TB36	TB42	TB48	TB54
12	TB20	TB27	TB27	TB30	TB36	TB36	TB42	TB48	TB54
14	TB27	TB27	TB27	TB36	TB36	TB42	TB42	TB48	TB54
16	TB27	TB27	TB30	TB36	TB42	TB42	TB42	TB48	TB54
18	TB27	TB30	TB30	TB36	TB42	TB42	TB48	TB54	TB56
20	TB30	TB30	TB36	TB36	TB42	TB42	TB48	TB54	TB56
22	TB30	TB36	TB36	TB36	TB42	TB42	TB48	TB54	TB56
24	TB36	TB36	TB36	TB42	TB42	TB48	TB48	TB54	TB56
26	TB36	TB36	TB36	TB42	TB48	TB48	TB48	TB54	TB60
28	TB36	TB36	TB42	TB42	TB48	TB48	TB54	TB54	TB60
30	TB36	TB42	TB42	TB42	TB48	TB48	TB54	TB56	TB60
32	TB42	TB42	TB42	TB42	TB48	TB48	TB54	TB56	TB60

Tension Bridging for Solid Sawn Lumber

Joist Size	Spacing (in.)	NCA		TB		LTB	Code Ref.
		Model No.	L (in.)	Model No.	L (in.)	Model No.	
2x10	12	NCA2x10-12	12½	TB20	20	—	IBC, FL, LA
2x12	12	NCA2x12-12	13⅝	TB20	20	—	
2x14	12	NCA2x8-16	15¼	TB27	27	—	
2x16	12	NCA2x10-16	15 13/16	TB27	27	—	
2x8	16	NCA2x8-16	15¼	TB27	27	LTB20 or 40	
2x10	16	NCA2x10-16	15 13/16	TB27	27	LTB20 or 40	
2x12	16	NCA2x12-16	16⅞	TB27	27	—	
2x14	16	—	—	TB27	27	—	
2x16	16	—	—	TB27	27	—	
2x10	24	—	—	TB30	30	—	
2x12	24	—	—	TB30	30	—	
2x14	24	—	—	TB36	36	—	
2x16	24	—	—	TB36	36	—	

Space bridging to avoid contact noises.

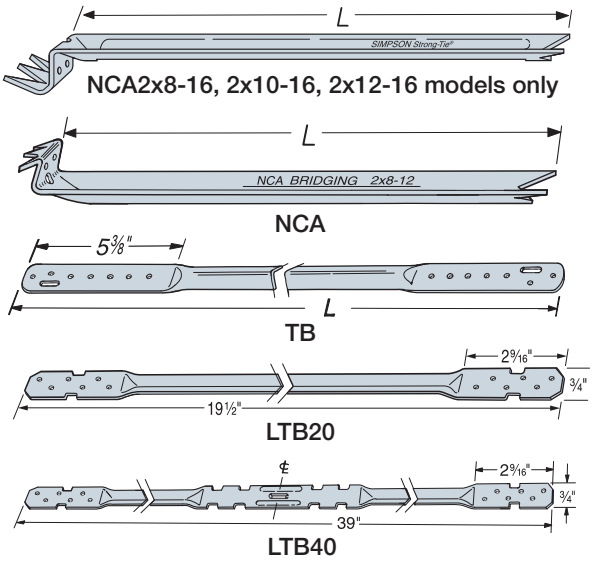

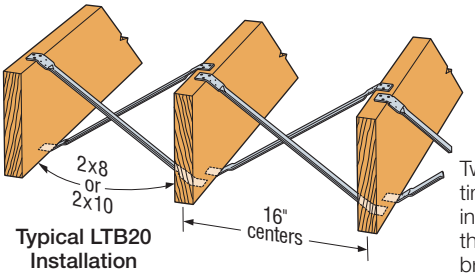

Typical LTB20 Installation

Two to three times faster installation than wood bridging.

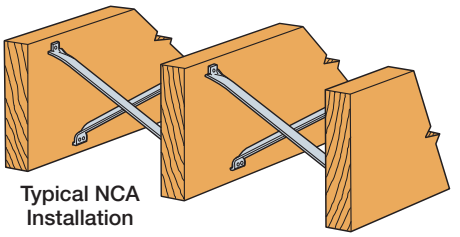

Typical NCA Installation

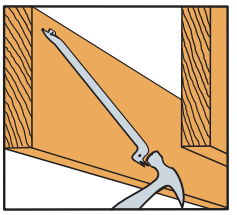

Install from below as shown, or from above. Drive upper end into joist approximately 1" from the top.

For all bridging avoid contact between steel members (this may cause squeaks).

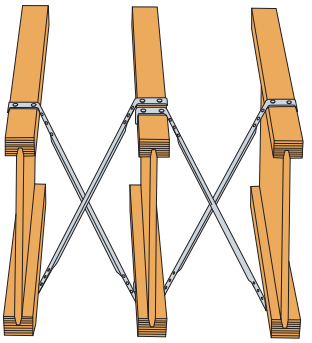

Typical TB Installation

C-C-2021 ©2021 SIMPSON STRONG-TIE COMPANY INC.

RTA/RTB/RTC/RTF/RTRZ/RTT/RTU/FWH

Rigid Tie® Connectors

Rigid Tie connector products are great utility connectors used to connect wood members together in a variety of ways. See the table and drawings for possible wood member connections.

Material: RTC44 — 14 gauge; RTA2 — 16 gauge; RTRZ and RTB — 20 gauge; all others — 18 gauge

Finish: Galvanized. Some products available in ZMAX® coating; see Corrosion Information, pp. 12–15. Select models available in black powder coat; see **strongtie.com** for options.

Installation:

- Use all specified fasteners; see General Notes
- Always follow manufacturer's instructions when using power tools and building equipment

Codes: See p. 11 for Code Reference Key Chart

These products are available with additional corrosion protection. For more information, see p. 14.

SD Many of these products are approved for installation with Strong-Drive® SD Connector screws. See pp. 348–352 for more information.

WBSK

The Workbench/Shelving Kit is a fast-easy way to build a workbench and many other DIY-type projects that need a four-corner base. Visit **strongtie.com/diy** for more information.

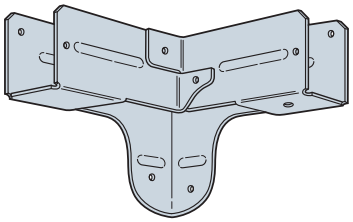

RTC2Z

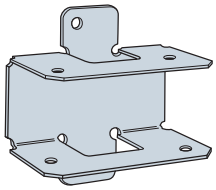

RTRZ

Model No.	Post Size	Joist Size	Fasteners (Total) (in.) Post	Fasteners (Total) (in.) Joist	Allowable Loads (DF/SP) Floor (100)	Allowable Loads (DF/SP) Roof (125)	Code Ref.
FWH2	2x	2x	(8) #8 x 1¼" SD	(8) #8 x 1¼" SD	N/A	N/A	—
RTA2Z	2x	2x	(4) #9 x 1½" SD	(4) #9 x 1½" SD	150	150	
RTA4	4x	4x	(7) #8 x 1¼" SD	(5) #8 x 1¼" SD	N/A	N/A	
RTB22	2x	2x	(4) #8 x 1¼" SD	(4) #8 x 1¼" SD	N/A	N/A	
RTC22Z	2x	2x	(5) #9 x 1½" SD	(6) #9 x 1½" SD	775	775	IBC, FL, LA
RTC2Z	2x4	2x	(6) #8 x 1¼" SD	(6) #8 x 1¼" SD	300	375	
			(6) 0.148 x 1½	(6) 0.148 x 1½	710	875	
			(6) #9 x 1½" SD	(6) #9 x 1½" SD	1,025	1,260	
RTC42	4x4	2x	(14) #8 x 1¼" SD	(8) #8 x 1¼" SD	650	810	
			(14) 0.162 x 3½	(8) 0.148 x 1½	1,975	2,430	
			(14) #10 x 1½" SD	(8) #10 x 1½" SD	2,420	3,030	
RTC44	4x4	4x	(14) 0.148 x 3¼	(15) 0.148 x 3¼	1,770	2,140	
			(14) 0.162 x 3½	(15) 0.162 x 3½	2,085	2,530	
			(14) #10 x 1½" SD	(15) #10 x 1½" SD	2,420	3,030	
RTF2Z	2x4	2x	(4) #9 x 1½" SD	(8) #9 x 1½" SD	685	855	—
RTT22Z	2x	2x	(3) #9 x 1½" SD	(7) #9 x 1½" SD	500	500	
RTRZ	2x	2x	(2) #8 x 1¼" SD	(4) #8 x 1¼" SD	N/A	N/A	
RTU2	2x	2x	(2) #8 x 1¼" SD	(4) #8 x 1¼" SD	N/A	N/A	

1. Allowable loads must be equally distributed on both joists.
2. **Fasteners:** Nail dimensions are listed diameter by length. SD screws are Simpson Strong-Tie® Strong-Drive SD Connector screws. See pp. 21–22 for fastener information.

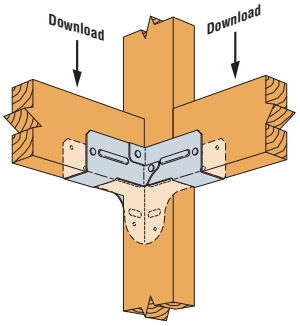

RTC2Z Installation

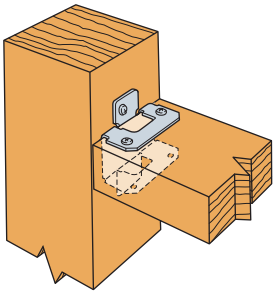

RTRZ Installation

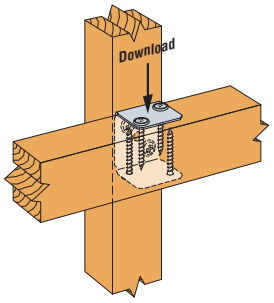

RTU2 Installation

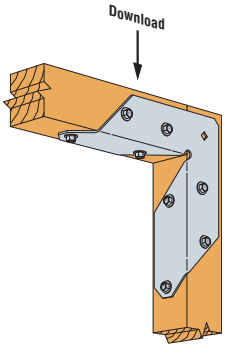

RTA2Z Installation

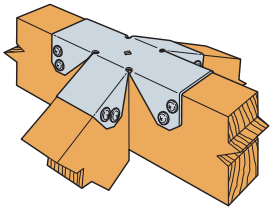

FWH2 Installation

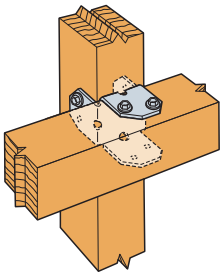

RTB22 Installation

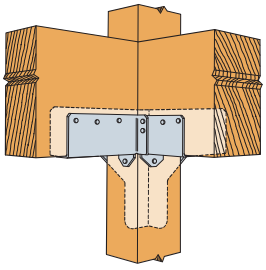

RTC44 Installation
(RTC2Z similar)

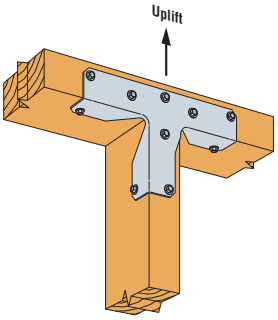

RTT22Z Installation

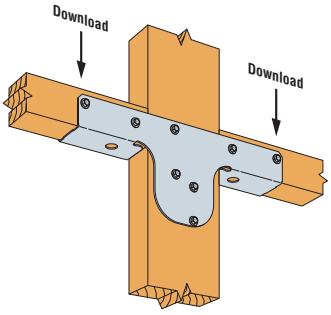

RTF2Z Installation

C-C-2021 ©2021 SIMPSON STRONG-TIE COMPANY INC.

SBV/CF-R

Shelf Brackets / Concrete Form Angles

Use the SBV for shelving, counter brackets window ledge supports, at a very competitive price.

The CF-R is used where a moderate-size shelf bracket and reinforcing angle is needed. When used for tilt-up perimeter forming, the nail hole placement ensures substantial reuse.

Material: 16 gauge

Finish: Galvanized

Installation: • Use all specified fasteners. See General Notes.

- SBV — Reversible for nominal 10" or 12" shelves of any thickness.
- CF-R (Retail Pack) — Recommended spacing is 36" on center for 2x's and 18" on center for 1x's. Use the 5" leg for 6" lumber and the 6" leg for 8" lumber. Holes are sized for ¼" Strong-Drive® SDS Heavy-Duty Connector screws, 0.148"-diameter nails or #9 Strong-Drive SD Connector screws.

Codes: See p. 11 for Code Reference Key Chart

Model No.	Fasteners	DF/SP Allowable Downloads (100)	Code Ref.
	Stud		
CF-R	(3) ¼" x 2" SDS	135	—
SBV	(4) ¼" x 2" SDS	130	

1. **Fasteners:** SDS screws are Simpson Strong-Tie® Strong-Drive SDS Heavy-Duty Connector screws. See pp. 21–22 for fastener information.

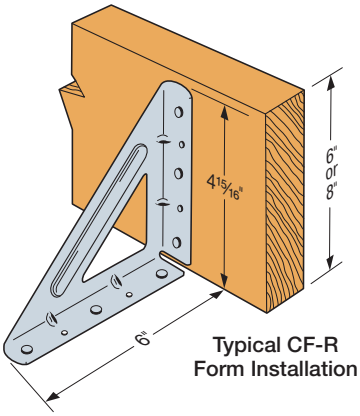

Typical CF-R Form Installation

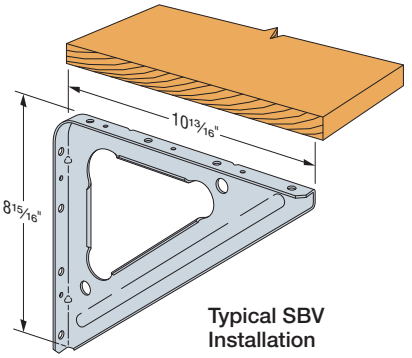

Typical SBV Installation

DS

Drywall Stop

Eliminates costly blocking at top plate, end walls, and corners. A typical residence will use several hundred of these inexpensive clips with a substantial savings in blocking and labor.

The installation prongs provide even more labor savings.

Material: 20 gauge

Finish: Galvanized

Installation:

- 16" on center or less, using 0.131" x 2½" nails
- DS should not be used where gypsum board is used for structural loads

Code Ref.: IBC, FL, LA

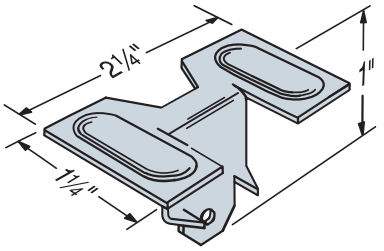

DS

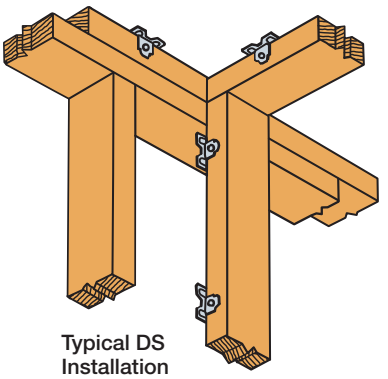

Typical DS Installation

C-C-2021 ©2021 SIMPSON STRONG-TIE COMPANY INC.

SD

Wafer-Head Screw

The #8 x 1¼" SD Wafer-Head screw is ideal for miscellaneous fastening applications. The needle point ensures fast starts, and a deep #2 Phillips drive provides secure driver bit engagement.

Material: Heat-treated carbon steel

Finish: Electro-galvanized

Codes: See p. 11 for Code Reference Key Chart

Warning: Industry studies show that hardened fasteners can experience performance problems in wet or corrosive environments. Accordingly, use the #8 x 1¼" SD Wafer-Head screw in dry, interior and non-corrosive environments only.

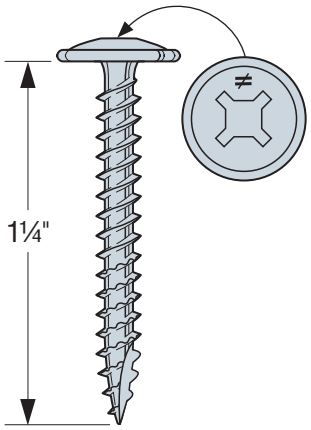

Wafer-Head Screw
(not for structural applications)

Model No.	Size (in.)	DF/SP Allowable Loads	SPF/HF Allowable Loads	Code Ref.
		Shear (100) Steel Side Plate 10 ga. or Greater	Shear (100) Steel Side Plate 10 ga. or Greater	
SD8 x 1.25-R	5/32 x 1¼	50	45	—

1. The Wafer-Head SD8x1.25 wood screw requires ¾" minimum penetration. Do not use SD8x1.25 screws with structural connectors unless specified and stated in this catalog.

RC

Ripper Clip

The ripper clip is designed to connect ripped 2x framing to the top of another wood joist.

Material: 20 gauge

Finish: Galvanized

Installation:

- Use all specified fasteners; refer to General Notes
- Attach RC to ripper, then attach ripper/RC assembly to roof joist

Codes: See p. 11 for Code Reference Key Chart

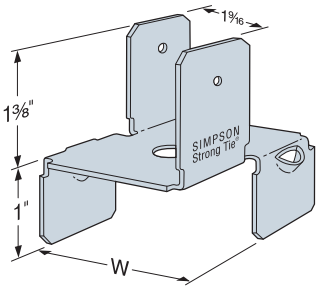

RC1.56
(others similar)

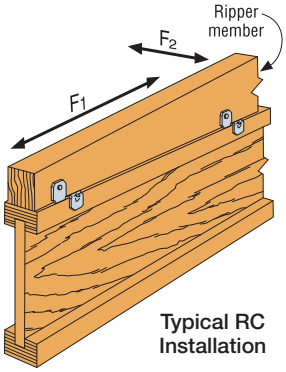

Typical RC Installation

Model No.	W (in.)	Fasteners (in.)		Allowable Uplift Load	F_1	F_2	Code Ref.
		Ripper	Joist	(160)			
RC1.56	1 9/16	(2) 0.148 x 1½	(2) 0.148 x 1½	205	240	205	—
RC1.81	1 13/16						
RC2.1	2⅛						

1. Allowable loads are for DF ripper members.
2. Uplift loads have been increased for earthquake or wind loading with no further increase allowed. Reduce where other loads govern.
3. Designer to consider stability/blocking requirements for system, if necessary.
4. Spacing of RC per designer.
5. **Fasteners:** Nail dimensions are listed diameter by length. See pp. 21–22 for fastener information.

C-C-2021 ©2021 SIMPSON STRONG-TIE COMPANY INC.

PSCL/PSCA

Panel Sheathing Clips

Simpson Strong-Tie panel sheathing clips are used to brace unsupported sheathing edges and provide a ⅛" gap to address shrinkage and expansion of roof sheathing.

Material: 20 gauge

Finish: Galvanized

Installation:

- Use the same size sheathing clip as the panel thickness
- Maximum spans may be reduced for low slopes or high uniform loads; refer to sheathing manufacturer's installation instructions

Codes: See p. 11 for Code Reference Key Chart

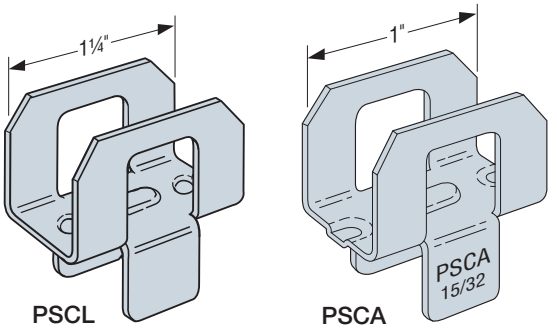

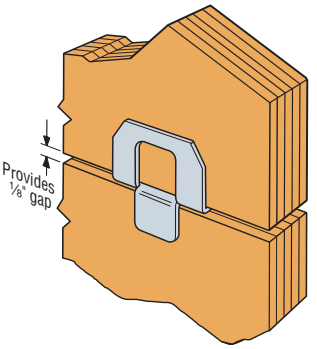

Typical PSCL Installation
(PSCA similar)

Span Rating	Panel Thickness (in.)	Model No.	Maximum Roof Sheathing Span		No. of Clips Per Span	Code Ref.
			With Clip	Without Clip		
24/0	⅜	PSCL3/8	24	20	1	—
24/16	7⁄16	PSCA7/16	24	24	1[2]	
24/16	7⁄16	PSCL7/16	24	24	1	
32/16	15⁄32	PSCA15/32	32	28	1[2]	
32/16	15⁄32	PSCL15/32	32	28	1	
32/16	½	PSCA1/2	32	28	1[2]	
32/16	½	PSCL1/2	32	28	1	
40/20	⅝	PSCA 5/8	40	32	1[2]	
40/20	⅝	PSCL5/8	40	32	1	
40/20	19⁄32	PSCL19/32	40	32	1	
48/24	¾	PSCL3/4	48	36	2	

1. Span rating and Maximum Roof Sheathing Spans are for reference only. Refer to IBC Table 2304.8 (3) for additional important information.
2. Maximum roof sheathing span with a single PSCA is 28". For spans > 28", use two PSCAs.

MP

Mending Plates

Versatile and easy-to-use mending plates for wood-to-wood connections. No nails or notching of wood required. For non-structural applications only; not for truss applications.

Material: 20 gauge

Finish: Galvanized

Installation:

- Place plate over two pieces of aligned wood with arrows aligned at joint
- Place a wood block over the mending plate and hammer the wood block to embed the prongs

Codes: See p. 11 for Code Reference Key Chart

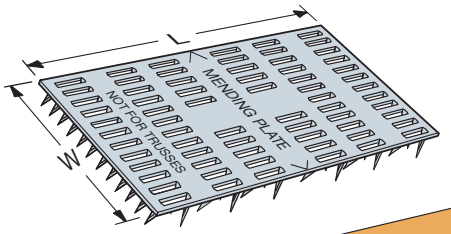

MP36
(other sizes similar)

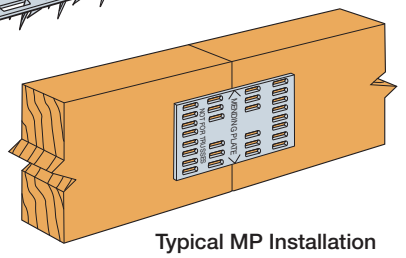

Typical MP Installation

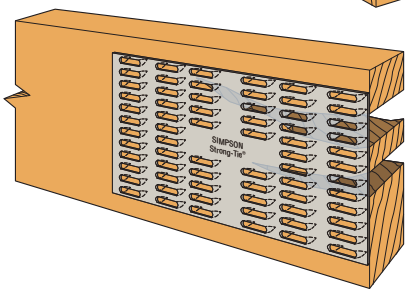

Pallet Repair Application

Model No.	Dimensions (in.)		Code Ref.
	W	L	
MP14	1	4	—
MP24	2	4	
MP36	3	6	

1. Connectors are not load rated.

C-C-2021 ©2021 SIMPSON STRONG-TIE COMPANY INC.

TP/TPA

Tie Plates

TPs are nail-on tie plates. TPAs are flanged for added support.

Material: 20 gauge

Finish: Galvanized

Installation:

- Holes are sized for 0.131" x 2½" nails or 0.131" x 1½" nails

Codes: See p. 11 for Code Reference Key Chart

SD Many of these products are approved for installation with Strong-Drive® SD Connector screws. See pp. 348–352 for more information.

Model No.	Dimensions (in.)		Number of Nail Holes	Code Ref.
	W	L		
TP15	1 13/16	5	13	—
TPA37	3½	7	32	
TPA39	3½	9	41	
TP35	3⅛	5	23	
TP37	3⅛	7	32	
TP39	3⅛	9	41	
TP312	3⅛	12	54	
TP316	3⅛	16	72	
TP45	4⅛	5	30	
TP47	4⅛	7	42	
TP49	4⅛	9	54	
TP411	4⅛	11	66	
TP57	5¾	7	60	
TPA57	5	7	49	

1. Connectors are not load rated.

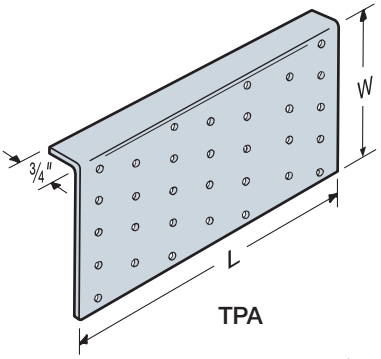

TPA

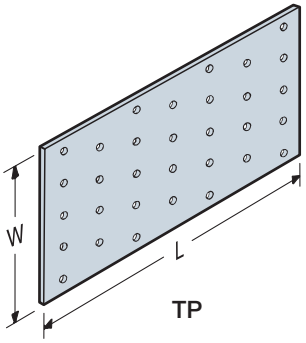

TP

J/JP

Floor Beam Levelers

Jack piers and standard floor beam levelers offer unique leveling simplicity during and after construction.

Material: 12-gauge plates; ¾" threaded rod; 1 1/16" O.D. steel pipe

Finish: None

Installation:

- Use all specified fasteners; see General Notes
- Holes are provided for installation with (4) 0.148" x 1½" nails
- Do not use J/JPs for dynamic jacking of structures, such as houses

Codes: See p. 11 for Code Reference Key Chart

Model No.	Dimensions			Allowable Bearing Loads (DF/SP/SPF/HF) (100)	Code Ref.
	H (Min.–Max.) (in.)	Pipe Length (in.)	Threaded Rod Length (in.)		
JP44	2–4	—	4¾	4,440	—
J57	5–7	4	4	4,380	
J813	8–13	7	8	4,380	
J1318	13–18	12	10	4,380	
J1621	16–21	15	10	4,380	
J2126	21–26	20	10	4,380	

1. Post design by designer. See strongtie.com/post for post allowable loads.
2. Loads may not be increased for duration of load.
3. **Fasteners:** Nail dimensions are listed diameter by length. See pp. 21–22 for fastener information.

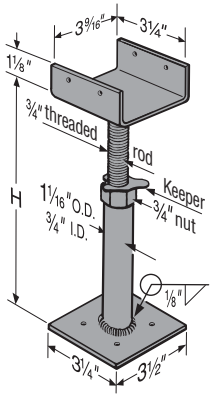

J57 Floor Beam Leveler
(others similar)

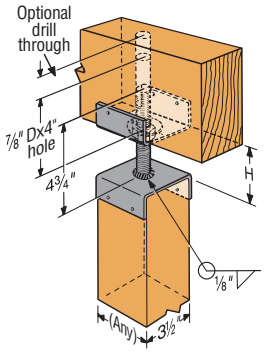

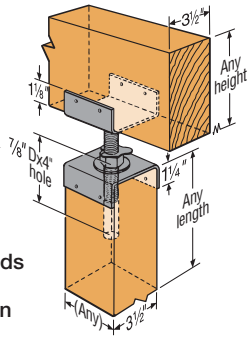

Two Methods of JP44 Installation

C-C-2021 ©2021 SIMPSON STRONG-TIE COMPANY INC.

IS

Insulation Supports

The insulation supports are cut from carbon steel spring wire for optimum flexibility and strength. Mitered tips dig into the wood, securing itself and insulation when installed between joists.

Material: 14 gauge

Finish: None

Installation:

- Install between joists. IS16 for 16" o.c. spacing; IS24 for 24" o.c. spacing. Follow insulation manufacturer's installation instructions.
- Wear safety glasses, gloves and other appropriate safety equipment.

Codes: See p. 11 for Code Reference Key Chart

Model No.	Diameter	Length (in.)	Joist Spacing	Code Ref.
IS16-R100	0.086	15½	16" o.c.	—
IS24-R100	0.091	23½	24" o.c.	

IS16
(IS24 similar)

Typical IS Installation

CSC/FSS

Ceiling Support Clip / Furring Stabilizer Strap

Provides 1" separation between the furring channel and joist to allow for the use of Thermafiber® insulation and the attachment of the furring channel to all joists. Provides an efficient sound barrier, and a one-hour UL-listed fire rating.

- UL-listed. See Underwriters Laboratory, Inc. Design No. L530 for USG gypsum board and Weyerhaeuser/TJI® joists.
- Check Evaluation Reports for individual I-joist manufacturer approvals.

Material: 24 gauge (minimum)

Finish: Galvanized

Installation:

- For CSC use (1) 0.131" x 1½" nail
- For FSS use #8 self-tapping steel screw (not provided) into channel, twist 90°, bend upward and fasten to the side of joist bottom flange with screw or nail

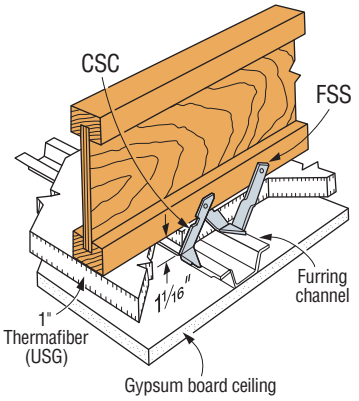

Typical CSC and FSS Installation

Thermafiber® and TJI® are registered trademarks of US Gypsum Company and Weyerhaeuser, respectively.

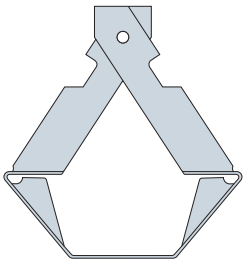

CSC

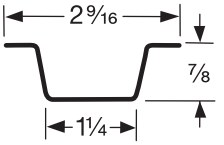

Furring Channel Detail

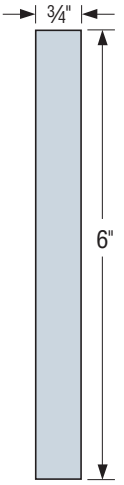

FSS
(see Installation Notes)

C-C-2021 ©2021 SIMPSON STRONG-TIE COMPANY INC.

Outdoor Accents®

Decorative Hardware

The Outdoor Accents decorative hardware product line features connectors and fasteners that bring beauty and strength to custom outdoor living structures. The two connector designs — Mission Collection® and Avant Collection™ — offer a choice of styles, from ornate and traditional to clean and simple. Both collections install with an innovative, load-rated hex-head washer and fastener combination, delivering the appearance of a bolt while providing the easy installation and convenience of a screw.

Outdoor Accents connectors include post bases to secure wood columns to concrete while providing a 1" stand-off height that helps reduce decay. These bases accommodate lumber in both nominal and rough sizes. Optional decorative side plates are available to give the look of a four-sided post base.

Angles make connections between beams and posts stronger and provide more consistent, straight corners for a variety of outdoor projects. Flat T and L straps provide reinforcement for connections where one lumber piece intersects another at a 90° angle. The deck joist tie attaches 2x joists to the side of 4x or larger support posts. Both collections also feature gable plates and decorative washers to add flair to any outdoor living project.

Additionally, the Essentials Collection features concealed flange hangers that work with both styles and the Accessories Collection features products that add decorative accents to any project, including the new APBDW composite wrap. Featuring the arched profile of the Mission Collection, the wrap provides a decorative finish over most nominal 4x4 and 6x6 post bases.

Material: See tables

Finish: ZMAX® with black powder coat

Installation:

- Use all specified fasteners; see General Notes
- Outdoor Accents connectors must be installed with the Hex-Head Washer (STN22) and Structural Wood screw (SDWSDBB) combination. Some items require Strong-Drive® SD Connector screws.

Codes: See p. 11 for Code Reference Key Chart

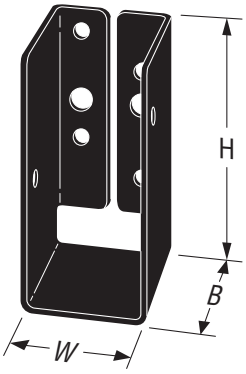

APLH
(APHH similar)

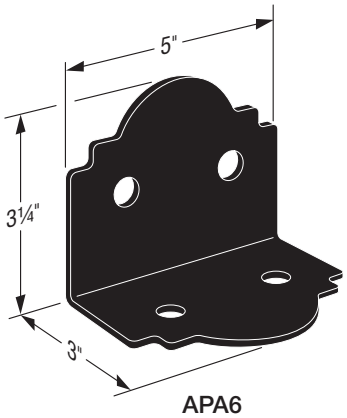

APA6
(others similar)
US Patent Pending

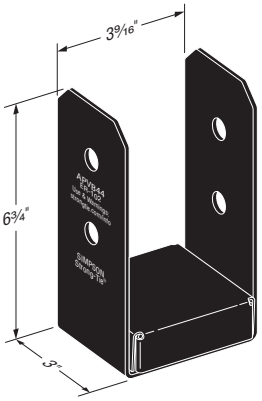

APVB44
(others similar)

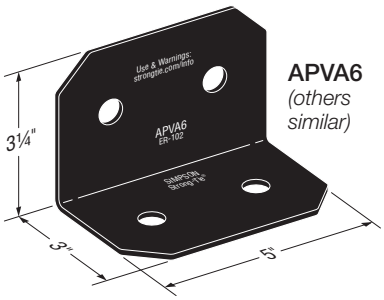

APVA6
(others similar)

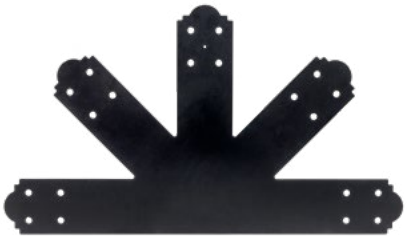

APGP1212
(others similar)

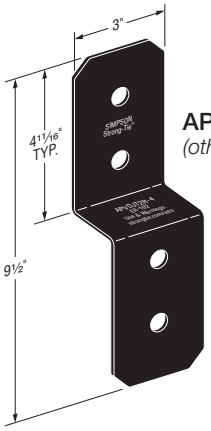

APVDJT2R-4
(others similar)

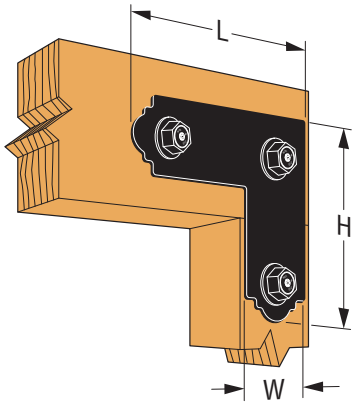

Typical APL4 Installation

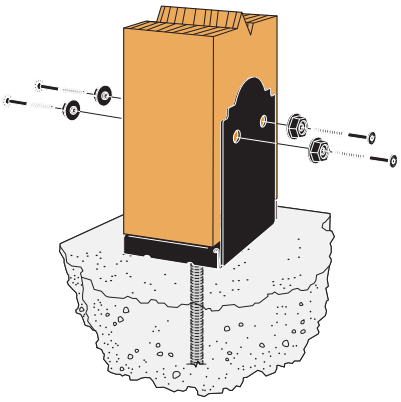

Typical APB Installation

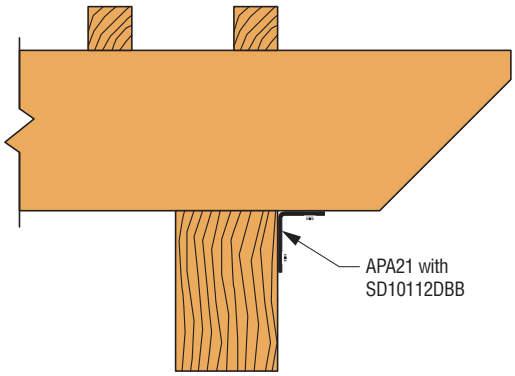

Typical APA21 Installation

C-C-2021 ©2021 SIMPSON STRONG-TIE COMPANY INC.

Decorative Hardware

Post Bases

Model No.	Ga.		Dimensions (in.)			Fastener Qty.		DF/SP Allowable Loads		Code Ref.
	Base	Strap	L	W	H	Column	Anchor	Uplift (160)	Down (100)	
APB44	16	12	3	3 9/16	7	4	(1) 5/8	1,035	6,725	IBC, FL, LA
APB44R	16	12	3	4 1/16	6 3/4	4	(1) 5/8	1,035	6,725	
APB66	12	12	5	5 1/2	7 1/2	4	(1) 5/8	1,260	11,450	
APB66R	12	12	5	6	7 1/4	4	(1) 5/8	1,260	11,450	
APB88	14	12	7	7 1/2	10 9/16	8	(2) 5/8	2,670	22,255	
APB88R	14	12	7	8	10 5/16	8	(2) 5/8	2,670	22,255	
APB1010	14	12	9	9 1/2	11	8	(2) 5/8	2,365	23,725	
APB1010R	14	12	9	10	10 3/4	8	(2) 5/8	2,365	23,725	

1. Uplift loads have been increased for earthquake or wind loading with no further increase allowed. Reduce where other loads govern.
2. Downloads may not be increased for short-term loading.
3. Specifier is to design concrete and anchorage for uplift loads. Visit **strongtie.com** for more information about stainless-steel Titen HD® or SET-3G™ applications.
4. Downloads shall be reduced where limited by capacity of the post.
5. All post fasteners are Outdoor Accents® SDWS22312DBB structural wood screws inserted through an STN22 hex-head washer.
6. Post bases do not provide adequate resistance to prevent members from rotating about the base and therefore are not recommended for installations that lack top support (such as fences or unbraced carports).
7. Fasteners sold separately.

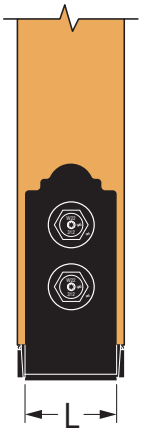

Typical APB44 Installation

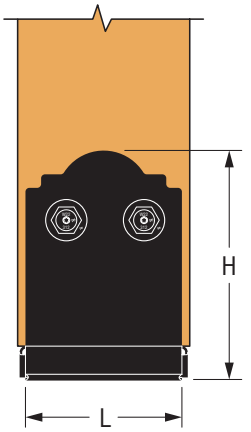

Typical APB66 Installation

Decorative Side Plates

Model No.	Ga.	Dimensions (in.)		Fastener Qty.
		W	H	Column
APB44DSP	12	3	6 3/4	4
APB66DSP		5	7 1/4	
APB88DSP		7	10 5/16	8
APB1010DSP		9	10 3/4	

1. All fasteners are a Simpson Strong-Tie® SDWS22312DBB inserted through an STN22 hex-head washer. Quantities listed are for two parts.
2. Install top of decorative side plates flush to top of post base strap legs. Decorative side plates installed on APB post bases will be raised up ¼" from the bottom of the post base, while installations on rough models will not.
3. Fasteners sold separately.

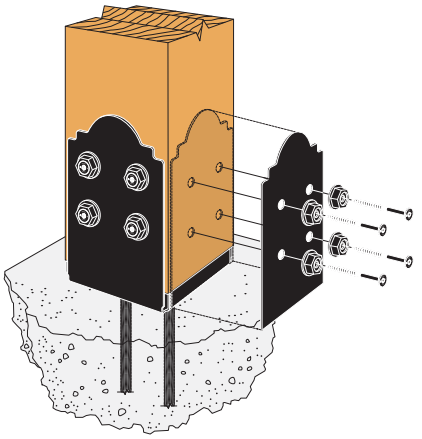

APB88 with Optional Decorative Side Plate

Decorative Post Base Wrap

Model No.	Post Size	Height (in.)	Installs With	Coating Material	Packaging Quantity
NEW APBDW44	4x4 post	10 11/16	(12) black screws (included)	Composite plastic	(1) 4-sided set
NEW APBDW66	6x6 post	11 7/16			

1. Wraps around the MPBZ moment post base as well as the CBSQ, ABUZ, ABWZ and ABAZ post bases (only with screw and nail applications; will not work over bolts).

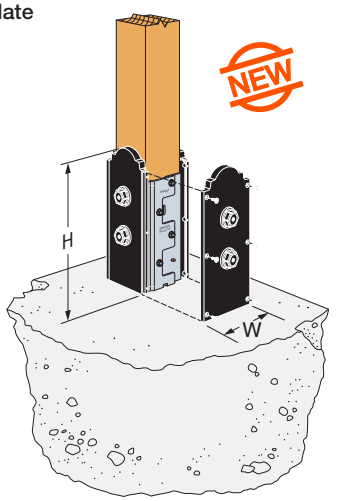

APBDW44

C-C-2021 ©2021 SIMPSON STRONG-TIE COMPANY INC.

Decorative Hardware

Heavy Angles

Model No.	Ga.	Dimensions (in.)			Fastener Qty.		DF/SP Allowable Loads		Code Ref.
		L	W_1	W_2	Column	Beam	Uplift (160)	F_1 (160)	
APA4	12	3	3¼	3	2	2	710	1,220	IBC, FL, LA
APA6	12	5	3¾	3½	4	4	1,350	1,985	

1. Allowable loads have been increased for wind or earthquake loading with no further increase allowed. Reduce where other loads govern.
2. Connector table loads and fastener quanitities are listed for two parts. For single part installations, use half the listed values.
3. All fasteners are Outdoor Accents® SDWS22312DBB structural wood screws inserted through an STN22 hex-head washer.
4. Fasteners sold separately.

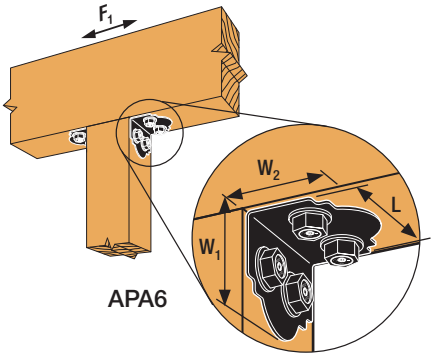

APA6

Light Rafter Tie

Model No.	Ga	Dimensions (in.)			Fastener Qty.		DF/SP Allowable Loads		Code Ref.
		L	W_1	W_2	Column	Beam	Uplift (160)	F_1 (160)	
APA21	14	1⅜	2	1½	1	1	200	120	IBC, FL, LA

1. Allowable loads have been increased for wind or earthquake loading with no further increase allowed. Reduce where other loads govern.
2. Allowable loads and fastener quantities are for a single part.
3. All fasteners are Outdoor Accents® SD10112DBB connector screws.
4. Fasteners sold separately.

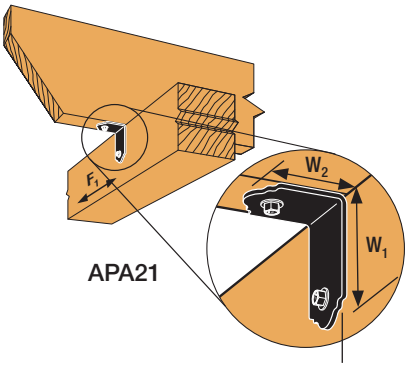

APA21

Beam-to-Column Ties and Flat Straps

Model No.	Ga.	Dimensions (in.)			Fastener Qty.		DF/SP Allowable Loads		Code Ref.
		W	L	H	Column	Beam	Uplift/ Tension (160)	F_1 (160)	
APL4	12	3	8¼	8¼	2	4	1,155	670	IBC, FL, LA
APL6	12	5	11¼	11¼	4	6	1,905	1,340	
APT4	12	3	13½	8¼	2	4	1,330	1,015	
APT6	12	5	17½	11¼	4	8	2,130	1,425	
APST412	12	3	11¼	—	—	8	850	—	—
APST612	12	5	11¼	—	—	8	1,505	—	

1. Allowable loads have been increased for wind or earthquake loading with no further increase allowed. Reduce where other loads govern.
2. Connector table loads and fastener quantities are listed for two parts. For single part installations, use half the listed values.
3. All fasteners are Outdoor Accents® SDWS22312DBB structural wood screws inserted through an STN22 hex-head washer.
4. Fasteners sold separately.

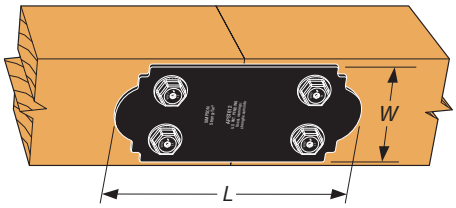

Typical APST612 Installation
(APST412 similar)

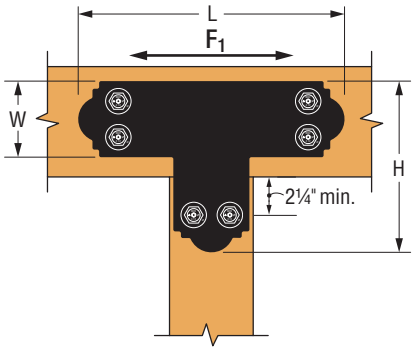

Typical APT6 Installation

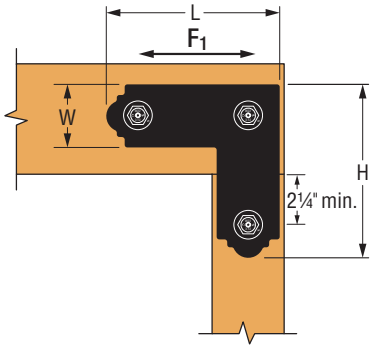

Typical APL4 Installation

C-C-2021 ©2021 SIMPSON STRONG-TIE COMPANY INC.

Outdoor Accents® — Mission Collection®

Decorative Hardware

Gable Plates

Model No.	Ga.	Roof Pitch	Angle (deg.)	Dimensions (in.)			Fastener Qty.			DF/SP Allowable Loads	Code Ref.
				W	H	L	Beam	Center Column	Angled Struts	Uplift (160)	
APGP612	12	6:12	27°	5	20½	36	16	8	16	3,925	—
APGP812		8:12	34°								
APGP1212		12:12	45°								

1. Allowable loads have been increased for wind or earthquake loading with no further increase allowed. Reduce where other loads govern.
2. Connector table loads and fastener quantities are listed for two parts. For single part installations, use half the listed values.
3. Uplift loads apply to the connection between the center vertical post and the beam.
4. All fasteners are a Simpson Strong-Tie® SDWS22312DBB inserted through an STN22 hex-head washer. Quantities listed are for two parts.
5. Fasteners sold separately.

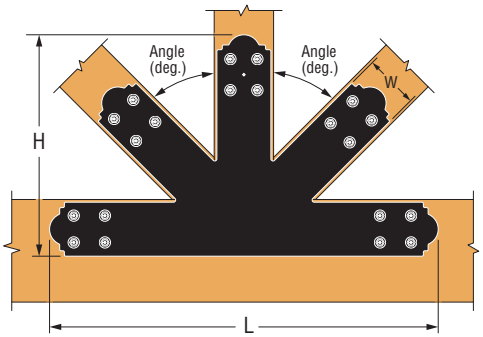

APGP1212

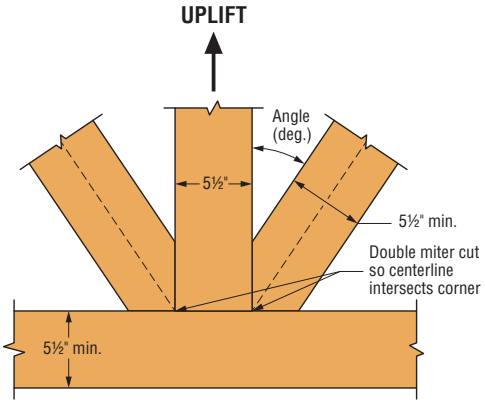

Note: *12:12 will have equal cuts. Other sizes will have unequal cuts.*

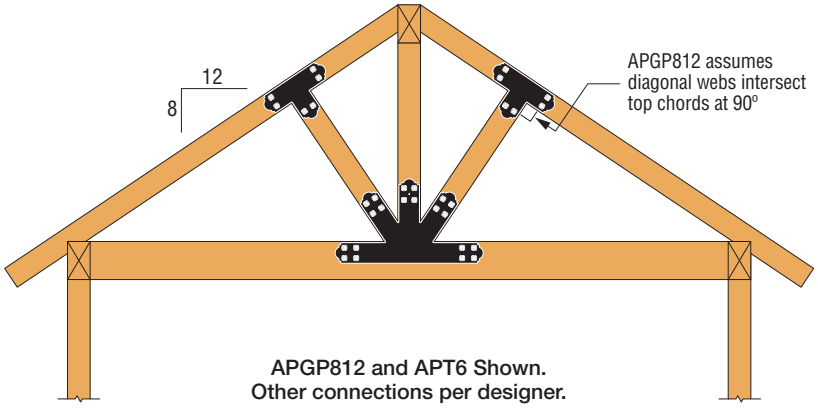

APGP812 and APT6 Shown.
Other connections per designer.

Deck Joist Tie

Model No.	Ga.	Dimensions (in.)			Fastener Quantity and Length		DF/SP Allowable Down Loads		Code Ref.
		S	W	H	Column	Joist	Floor (100)	Roof (125)	
APDJT2-4	12	1½	3	10	(2) 3½"	(2) 5½"	1,870	2,340	IBC, FL, LA
APDJT1.75-4	12	1¾	3	9¾	(2) 3½"	(2) 5½"	1,870	2,340	
APDJT2R-4	12	2	3	9½	(2) 3½"	(2) 5½"	1,870	2,340	
APDJT2-6	12	1½	5	10	(2) 3½"	(2) 5½"	1,870	2,340	
APDJT1.75-6	12	1¾	5	9¾	(2) 3½"	(2) 5½"	1,870	2,340	
APDJT2R-6	12	2	5	9½	(2) 3½"	(2) 5½"	1,870	2,340	

1. Roof loads are 125% of floor loads unless limited by other criteria. Floor loads may be adjusted for load durations according to the code provided they do not exceed those in the roof column.
2. Allowable loads and fastener quantities are per part. APDJT1.75 model loads for Western Red Cedar are 1,430 lb. floor (100) and 1,790 lb. roof (125).
3. Joist fastener is an Outdoor Accents® SDWS22512DBB structural wood screw inserted through an STN22 hex-head washer. Post fastener is an SDWS22312DBB structural screw inserted through an STN22 hex-head washer.
4. Fasteners sold separately.

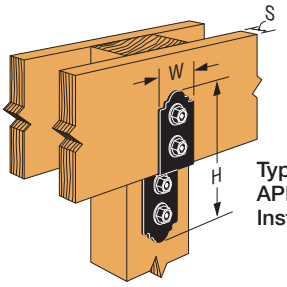

Typical APDJT2-4 Installation

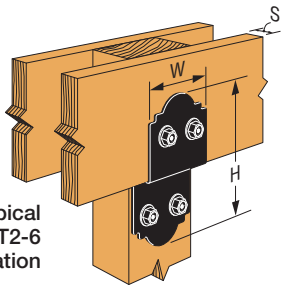

Typical APDJT2-6 Installation

C-C-2021 ©2021 SIMPSON STRONG-TIE COMPANY INC.

Decorative Hardware

Post Base

Model No.	Ga.		Dimensions (in.)			Fastener Qty.		DF/SP Allowable Loads		Code Ref.
	Base	Strap	L	W	H	Column	Anchor Dia. (in.)	Uplift (160)	Down (100)	
APVB44	16	12	3	3 9/16	6 3/4	4	(1) 5/8	1,035	6,725	IBC, FL, LA
APVB44R	16	12	3	4 1/16	6 1/2	4	(1) 5/8	1,035	6,725	
APVB66	12	12	5	5 1/2	6 13/16	4	(1) 5/8	1,260	11,450	
APVB66R	12	12	5	6	6 9/16	4	(1) 5/8	1,260	11,450	
APVB88	14	12	7	7 1/2	9 7/8	8	(2) 5/8	2,670	22,255	
APVB88R	14	12	7	8	9 5/8	8	(2) 5/8	2,670	22,255	
APVB1010	14	12	9	9 1/2	9 3/4	8	(2) 5/8	2,365	23,725	
APVB1010R	14	12	9	10	9 1/2	8	(2) 5/8	2,365	23,725	

1. Uplift loads have been increased for wind or earthquake loading with no further increase allowed. Reduce where other loads govern.
2. Downloads may not be increased for short-term loading.
3. Specifier is to design concrete and anchorage for uplift loads. Visit **strongtie.com** for more information about stainless-steel Titen HD® or SET-3G™ applications.
4. Downloads shall be reduced where limited by capacity of the post.
5. All column fasteners are Outdoor Accents SDWS22312DBB structural wood screws inserted through an STN22 hex-head washer.
6. Column bases do not provide adequate resistance to prevent members from rotating about the base and therefore are not recommended for installations that lack top support (such as fences or unbraced carports).
7. Fasteners sold separately.

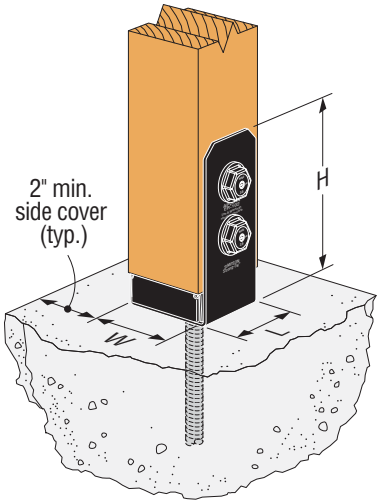

APVB44

Decorative Side Plates

Model No.	Ga.	Dimensions (in.)		Fastener Qty.
		W	H	Column
APVB44DSP	12	3	6 1/2	4
APVB66DSP		5	6 9/16	
APVB88DSP		7	9 5/8	8
APVB1010DSP		9	9 1/2	

1. All fasteners are Outdoor Accents SDWS22312DBB inserted through an STN22 hex-head washer. Quantities listed are for two parts.
2. Install top of decorative side plates flush to top of post base strap legs. Decorative side plates installed on APVB post bases will be raised up ¼" from the bottom of the post base, while installations on rough models will not.
3. Fasteners sold separately.

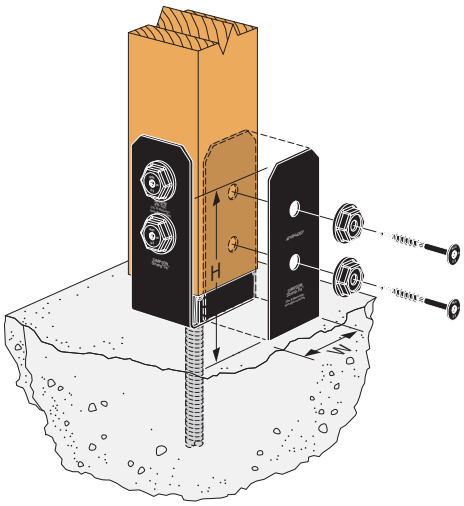

APVB44DSP shown with APVB44 post base

Deck Joist Tie

Model No.	Ga.	Dimensions (in.)			Fastener Quantity and Length		DF/SP Allowable Down Loads		Code Ref.
		S	W	H	Column	Joist	Floor (100)	Roof (125)	
APVDJT2-4	12	1 1/2	3	10	(2) 3 1/2"	(2) 5 1/2"	1,870	2,340	IBC, FL, LA
APVDJT1.75-4	12	1 3/4	3	9 3/4	(2) 3 1/2"	(2) 5 1/2"	1,870	2,340	
APVDJT2R-4	12	2	3	9 1/2	(2) 3 1/2"	(2) 5 1/2"	1,870	2,340	
APVDJT2-6	12	1 1/2	5	8 1/2	(2) 3 1/2"	(2) 5 1/2"	1,870	2,340	
APVDJT1.75-6	12	1 3/4	5	8 1/4	(2) 3 1/2"	(2) 5 1/2"	1,870	2,340	
APVDJT2R-6	12	2	5	8	(2) 3 1/2"	(2) 5 1/2"	1,870	2,340	

1. Roof loads are 125% of floor loads unless limited by other criteria. Floor loads may be adjusted for load durations according to the code, provided they do not exceed those in the roof column.
2. Allowable loads and fastener quantities are per part. APVDJT1.75 model loads for Western Red Cedar are 1,430 lb. floor (100) and 1,790 lb. roof (125).
3. Joist fastener is an Outdoor Accents® SDWS22512DBB structural wood screw inserted through an STN22 hex-head washer. Column fastener is an SDWS22312DBB structural screw inserted through an STN22 hex-head washer.
4. Fasteners sold separately.

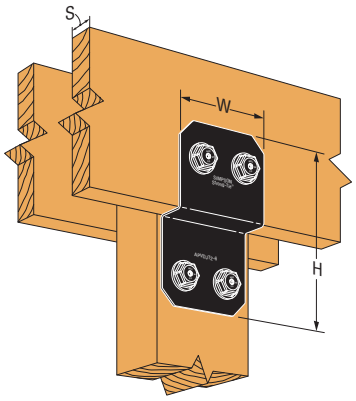

APVDJT2-6

C-C-2021 ©2021 SIMPSON STRONG-TIE COMPANY INC.

Decorative Hardware

Heavy Angles

Model No.	Ga.	Dimensions (in.)			Fastener Quantity		DF/SP Allowable Loads		Code Ref.
		L	W_1	W_2	Column	Beam	Uplift (160)	F_1 (160)	
APVA4	12	3	3¼	3	2	2	710	1,220	IBC, FL, LA
APVA6	12	5	3¼	3	4	4	1,350	1,985	

1. Allowable loads have been increased for wind or earthquake loading with no further increase allowed. Reduce where other loads govern.
2. Connector table loads and fastener quantities are listed for two parts. For single part installations, use half the listed values.
3. All fasteners are Outdoor Accents® SDWS22312DBB structural wood screws inserted through an STN22 hex-head washer.
4. Fasteners sold separately.

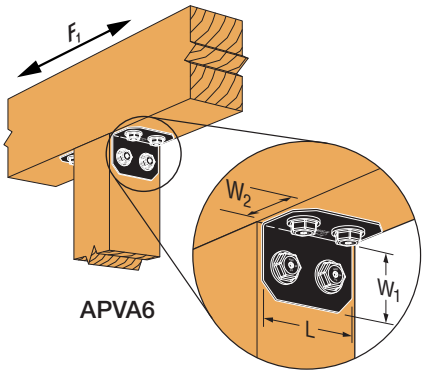

APVA6

Light Rafter Tie

Model No.	Ga.	Dimensions (in.)			Fastener Quantity		DF/SP Allowable Loads		Code Ref.
		L	W_1	W_2	Column	Beam	Uplift (160)	F_1 (160)	
APVA21	14	1⅜	2	1½	1	1	200	120	IBC, FL, LA

1. Allowable loads have been increased for wind or earthquake loading with no further increase allowed. Reduce where other loads govern.
2. Allowable loads and fastener quantities are for a single part.
3. All fasteners are Outdoor Accents SD10112DBB connector screws.
4. Fasteners sold separately.

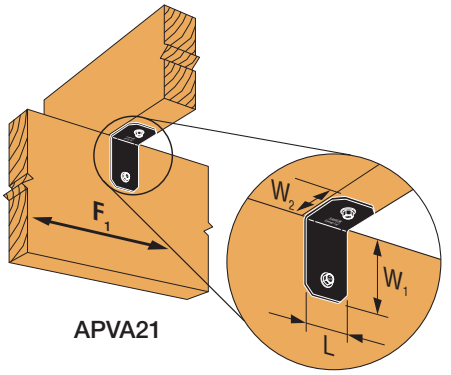

APVA21

Beam-to-Column Ties and Flat Straps

Model No.	Ga.	Dimensions (in.)			Fastener Quantity		DF/SP Allowable Loads		Code Ref.
		W	L	H	Column	Beam	Uplift (160)	F_1 (160)	
APVL4	12	3	8¼	8¼	2	4	1,155	670	IBC, FL, LA
APVL6	12	5	10½	10½	4	6	1,905	1,340	
APVT4	12	3	13½	8¼	2	4	1,330	1,015	
APVT6	12	5	16	10½	4	8	2,130	1,425	
APVST412	12	3	11¼	—	—	8	850	—	—
APVST610	12	5	9¾	—	—	8	1,505	—	

1. Allowable loads have been increased for wind or earthquake loading with no further increase allowed. Reduce where other loads govern.
2. Connector table loads and fastener quantities are listed for two parts. For single part installations, use half the listed values.
3. All fasteners are Outdoor Accents SDWS22312DBB structural wood screws inserted through an STN22 hex-head washer.
4. Fasteners sold separately.

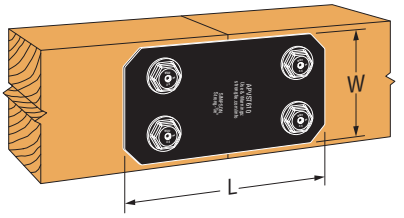

APVST610
(APVST412 similar)

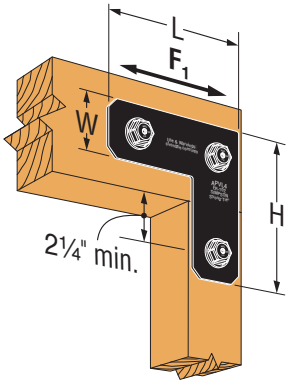

APVL4

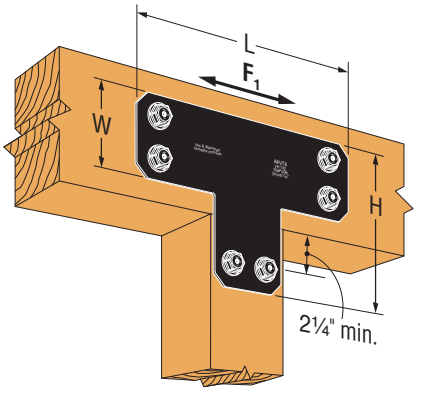

APVT6

C-C-2021 ©2021 SIMPSON STRONG-TIE COMPANY INC.

Outdoor Accents® — Avant Collection™ NEW

Decorative Hardware

Gable Plates

Model No.	Ga.	Roof Pitch	Angle (deg.)	Dimensions (in.)			Fastener Quantity			DF/SP Allowable Loads	Code Ref.
				W	H	L	Beam	Center Column	Angled Struts	Uplift (160)	
APVGP612	12	6:12	27°	5	19¾	34½	16	8	16	3,925	—
APVGP812		8:12	34°								
APVGP1212		12:12	45°								

1. Allowable loads have been increased for wind or earthquake loading with no further increase allowed. Reduce where other loads govern.
2. Connector table loads and fastener quantities are listed for two parts. For single part installations, use half the listed values.
3. Uplift loads apply to the connection between the center vertical post and the beam.
4. All fasteners are Outdoor Accents® SDWS22312DBB inserted through an STN22 hex-head washer. Quantities listed are for two parts.
5. Fasteners sold separately.

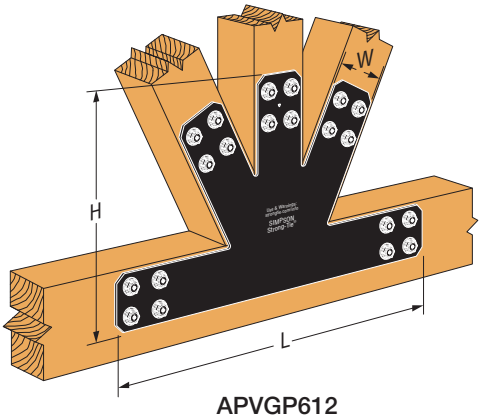

APVGP612

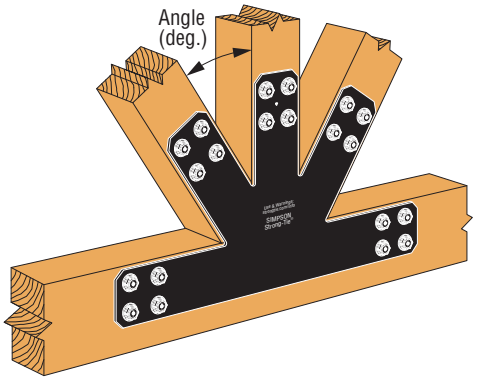

APVGP812

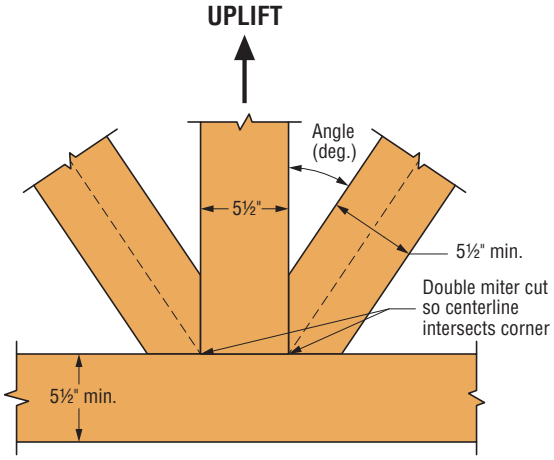

Note: *12:12 will have equal cuts. Other sizes will have unequal cuts.*

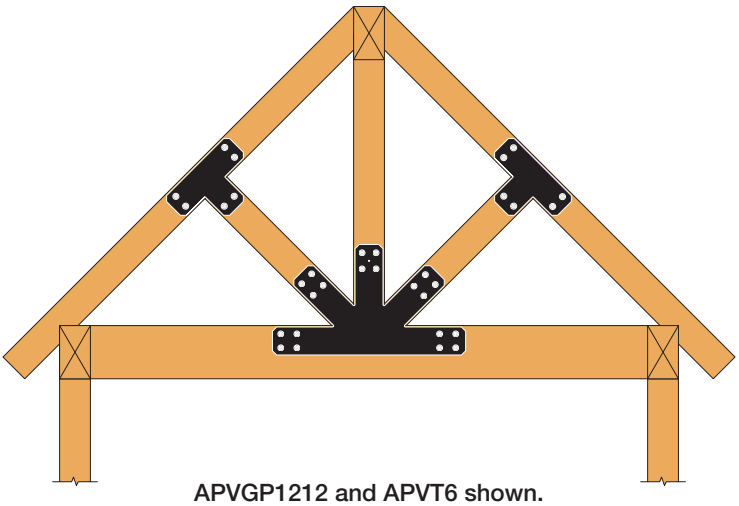

APVGP1212 and APVT6 shown.
(other connectors not shown for clarity, connections and roof pitch designed by others.)

New Avant gable plates for 4x lumber coming soon (APVGP1212-4). See strongtie.com/avant for information.

C-C-2021 ©2021 SIMPSON STRONG-TIE COMPANY INC.

Outdoor Accents Fasteners

Outdoor Accents Connector Screw

The Outdoor Accents connector screw reduces installation time by driving easily without predrilling. Designed for installation with the Outdoor Accents APA21 90° angle and APLH light joist hangers, the screw's black finish accents any outdoor living project. The sharp point of the screw enables fast starts.

Features:

- Use with Outdoor Accents Decorative Hardware (sold separately) for an appealing look
- ¼" hex head engages with driver bit for easier installation (¼" hex drive bit included)
- Optimized heat treating for ductility and strength
- The single-fastener steel-side-plate allowable load of the SD10 exceeds the shear load of a 0.162" x 3½" nail
- Code listed in ICC-ES ESR-3046

Material: Carbon steel

Finish: Double-barrier black proprietary coating

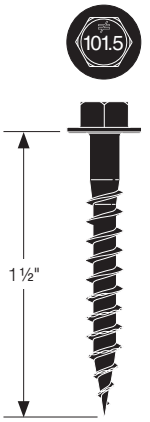

SD10112DBB

Outdoor Accents Hex-Head Washer

While the Outdoor Accents patented hex-head washer provides the decorative appearance of a bolted connection, its patented design enables an easier and significantly faster installation time than through-bolting. The hex-head washer is designed to help fasten Outdoor Accents post bases, T and L straps, angles, gable plates and heavy joist hangers.

Features:

- Combined with the Outdoor Accents structural wood screw (SDWSDBB), it provides a structural load-rated solution
- Easy to install
- Code listed in IAPMO-UES ER-192

Finish: Quik Guard® black coating for exterior use

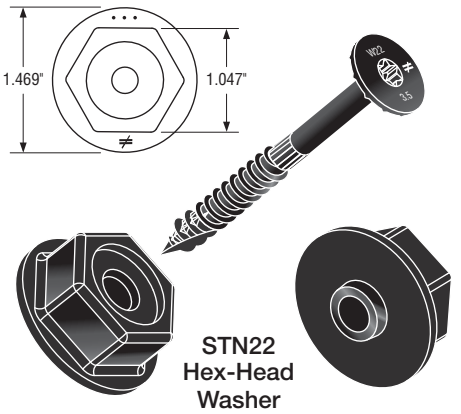

STN22 Hex-Head Washer

US Patents 10,253,801 and D733,546

Outdoor Accents Structural Wood Screw

The Outdoor Accents structural wood screw reduces installation time by driving easily without predrilling. When combined with the patented, load-rated Outdoor Accents hex-head washer, the solution delivers the decorative appearance of a bolt connection but with a much easier installation. The structural screw and washer are sold separately from each other and from the Outdoor Accents connectors.

Features:

- Use with Outdoor Accents Decorative Hardware and STN22 hex-head washer (sold separately) for an appealing look
- Use Outdoor Accents structural wood screw solitarily as a wood-to-wood fastener
- New patented SawTooth™ point ensures fast starts, reduces installation torque and eliminates the need for predrilling in most applications
- Deep 6-lobe T40 recess makes driving easier (T40 drive bit included)
- Code listed IAPMO-UES ER-192

Finish: Double-barrier black proprietary coating

SDWS22312DBB
(SDWS22512DBB similar)
US Patent 9,523,383

C-C-2021 ©2021 SIMPSON STRONG-TIE COMPANY INC.

Outdoor Accents Fasteners (cont.)

Outdoor Accents® Connector Screw

Model No.	Size (in.)	Thread Length (in.)	DF/SP Allowable Loads		SPF/HF Allowable Loads		Code Ref.
			Shear Steel Side Plate 20 ga. – 12 ga. (lb.)	Withdrawal (lb./in.)	Shear Steel Side Plate 20 ga. – 12 ga. (lb.)	Withdrawal (lb./in.)	
SD10112DBB	#10 x 1½	1	173	173	138	122	IBC, FL, LA

1. Allowable loads are shown at a wood load duration factor of C_D = 1.0. Loads may be increased for load duration per the building code up to a C_D = 1.6. Tabulated values must be multiplied by all applicable NDS adjustment factors.
2. Withdrawal loads and steel-side-plate shear loads are based on testing per ICC-ES AC233.
3. Withdrawal loads are based on penetration of the screw's entire thread length into the main member.
4. Visit **strongtie.com** for wood-to-wood shear values and wood side-plate details.
5. Fasteners sold separately.

Outdoor Accents® Structural Wood Screw with Hex-Head Washer — Wood to Wood/Steel Side Plate

Model No.	Size (in.)	Thread Length (in.)	Allowable Shear Loads (lb.)						Code Ref.
			2x Wood Side Member			12-ga. Steel Side Member			
			DF/SP	SPF/HF	Western Cedar	DF/SP	SPF/HF	Western Cedar	
SDWS22312DBB with STN22	0.22 x 3½	2	235	192	179	470	385	320	IBC, FL, LA
SDWS22512DBB with STN22	0.22 x 5½	2¾	465	430	395	640	495	425	

1. Allowable loads are for connections between two members with full screw thread penetration into the main member.
2. Allowable loads are shown at a wood load duration factor of C_D = 1.0. Loads may be increased for load duration per the building code up to a C_D = 1.6. Tabulated values must be multiplied by all applicable NDS adjustment factors.
3. Minimum spacing, edge, and end distance requirements are per IAPMO-UES ER-192.
4. Loads are based on installation into the side grain of the wood with the screw axis perpendicular to the face of the member.

Outdoor Accents® Structural Wood Screw — Wood to Wood

Model No.	Size (in.)	Thread Length (in.)	Allowable Shear Loads (lb.)			Allowable Withdrawal Loads (lb./in.)			Code Ref.
			2x Wood Side Member			DF/SP	SPF/HF	Western Cedar	
			DF/SP	SPF/HF	Western Cedar				
SDWS22312DBB	0.22 x 3½	2	255	190	225	164	151	142	IBC, FL, LA
SDWS22512DBB	0.22 x 5½	2¾	405	405	230	214	187		

1. Allowable loads are for connections between two members with full screw thread penetration into the main member.
2. Allowable loads are shown at a wood load duration factor of C_D = 1.0. Loads may be increased for load duration per the building code up to a C_D = 1.6. Tabulated values must be multiplied by all applicable NDS adjustment factors.
3. Minimum spacing, edge, and end distance requirements are per IAPMO-UES ER-192.
4. Loads are based on installation into the side grain of the wood with the screw axis perpendicular to the face of the member.

C-C-2021 ©2021 SIMPSON STRONG-TIE COMPANY INC.

Outdoor Accents Joist Hangers

Light Joist Hanger

Joist Size	Model No.	Ga.	Dimensions (in.)			Fastener Qty.		DF/SP Allowable Loads				Code Ref.
			W	H	B	Header	Joist	Uplift (160)	Floor (100)	Snow (115)	Roof (125)	
2x4	APLH24	14	1 9/16	3 5/16	1 7/8	4	2	315	690	795	865	IBC, FL, LA
	APLH24R		2 1/16	3 1/16								
2x6 or 2x8	APLH26	14	1 9/16	5 1/8	1 7/8	6	4	900	1,040	1,195	1,300	
	APLH1.75-6		1 13/16	5								
	APLH26R		2 1/16	4 7/8								
2x10 or 2x12	APLH210	14	1 9/16	8	1 7/8	10	6	1,345	1,730	1,990	2,165	
	APLH1.75-10		1 13/16	7 7/8								
	APLH210R		2 1/16	7 3/4								

1. Uplift loads have been increased for earthquake or wind loading with no further increase allowed. Reduce where other loads govern.
2. All fasteners are Simpson Strong-Tie® SD10112DBB.
3. Fasteners sold separately.

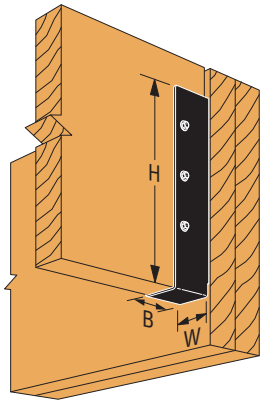

APLH210

Heavy Joist Hanger

Joist Size	Model No.	Ga.	Dimensions (in.)			Fasteners Qty.		DF/SP Allowable Loads				Code Ref.
			W	H	B	Header	Joist	Uplift (160)	Floor (100)	Snow (115)	Roof (125)	
4x6 or 4x8	APHH46	12	3 9/16	5 1/8	3	6	2	1,165	2,280	2,280	2,280	IBC, FL, LA
	APHH46R		4 1/16	4 7/8								
6x10 or 6x12	APHH610		5 1/2	8 1/2	3	14	6	4,140	5,880	6,760	7,350	
	APHH610R		6	8 1/4								

1. Uplift loads have been increased for earthquake or wind loading with no further increase allowed. Reduce where other loads govern.
2. All fasteners are Simpson Strong-Tie® SDS25300 to the header and SDWS22312DBB with STN22 hex-head washer to the joist.
3. Fasteners sold separately.

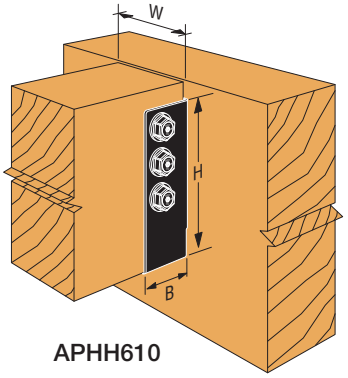

APHH610

C-C-2021 ©2021 SIMPSON STRONG-TIE COMPANY INC.

Outdoor Accents Accessories

Decorative Washer

Model No.	Ga.	Hole Diameter (in.)	W (in.)
APDMW56	12	9⁄16	3
APVDW56	12	9⁄16	3

1. Fastener is SDWS22312DBB inserted through an STN22 hex-head washer.

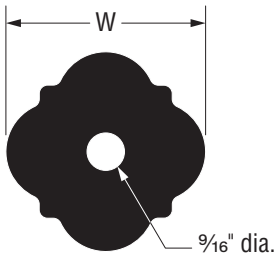

APDMW56

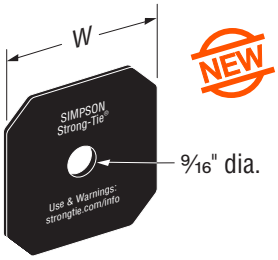

APVDW56

Decorative Star

Model No.	Ga.	Screw Size	W (in.)
APDTS3	12	#10 x 1½"	3

1. All fasteners are Outdoor Accents® SD10112DBB connector screws.

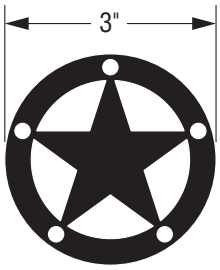

APDTS3

Decorative Post Cap

Model No.	Material and Finish	Post Size	L (in.)	W (in.)	Fasteners (in.)
APDPC4	Black composite	4x4	3⅝	3⅝	(1) 0.131 x 2½ or (1) 0.148 x 3
APDPC6		6x6	5⅝	5⅝	(1) 0.131 x 2½ or (1) 0.148 x 3

1. **Fasteners:** Nail dimensions are listed diameter by length. See pp. 21–22 for fastener information.

APDPC6
(APDPC4 similar)

APBO Bottle Opener

This new bottle opener is made of black textured, UV-protected composite. It features a metal bottle opener and a removable catch cup. It attaches with three corrosion-resistant fasteners (included).

APBO-KT

C-C-2021 ©2021 SIMPSON STRONG-TIE COMPANY INC.

APGT

Gazebo Tie

The APGT Gazebo Tie series adds strength and rigidity to six-sided gazebo connections.

APGT2 — Connects 2x rafter and top plate to post in six-sided gazebo. Adds strength and rigidity to 3-way connection.

APGT6 — Connects six 2x rafters at top of six-sided gazebo.

APGTF — Connects bottom 2x rim joists to post in six-sided gazebo. Allows installation over post base for adjustable height of rim joists.

Material: APGT6 — 18 gauge; APGT2, APGTF — 16 gauge

Finish: ZMAX® with black powder coat. See Corrosion Information, pp. 12–15

Installation:

- Use all specified fasteners. See General Notes.
- Minimum 2x6 rafter size.
- APGT6 — Bend one time only.

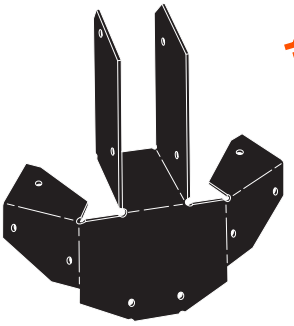

APGT2

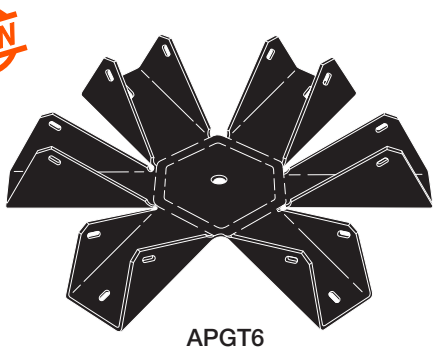

APGT6

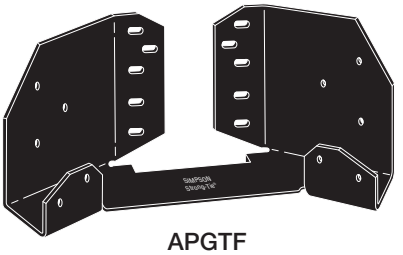

APGTF

Model No.	Fasteners (in.)		Code Ref.
	Rafter or Rim Joist	Top Plate or Post	
APGT2	8	4	—
APGT6	18	—	
APGTF	10	10	

1. All fasteners are Outdoor Accents® SD10112DBB connector screws.

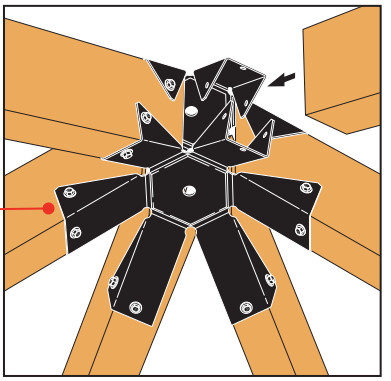

Typical APGT6 Installation

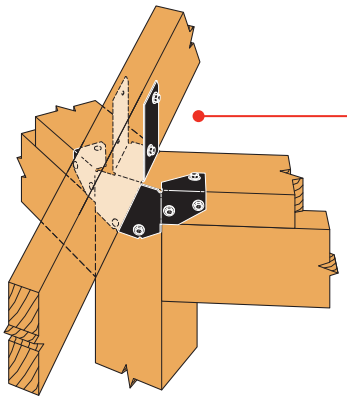

Typical APGT2 Installation

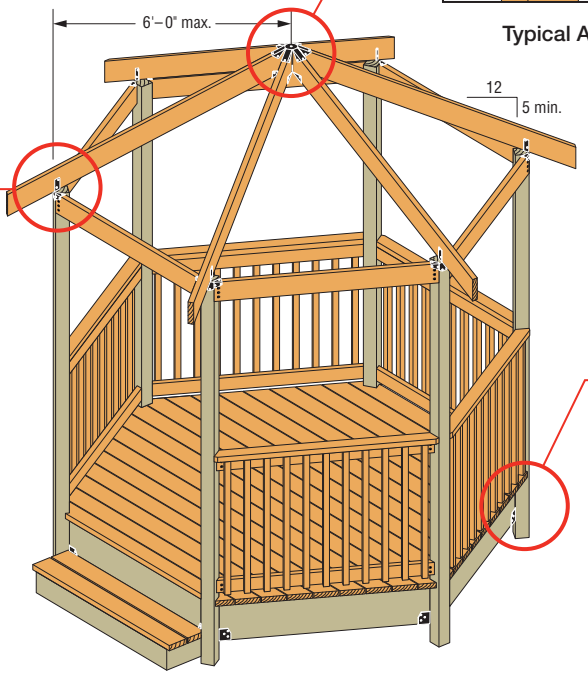

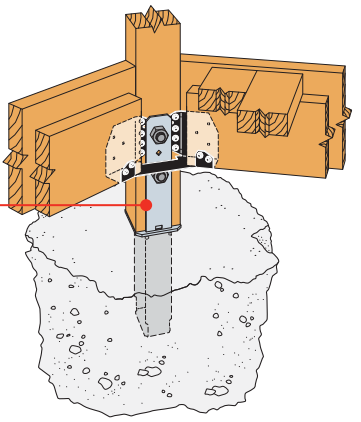

Typical APGTF Installation

C-C-2021 ©2021 SIMPSON STRONG-TIE COMPANY INC.

CPS/PBV

Standoff Bases

The PBV is a hidden standoff post base. Two different shapes fit a variety of posts sizes.

The CPS is a composite plastic standoff designed for increased concrete surface area.

Material: PBV — 14 gauge galvanized steel; CPS — engineered composite polymer

Finish: Black powder coat or galvanized

To Order: For black powder coat, order PBV6PC or PBV10PC. For galvanized coating, order PBV6 or PBV10.

Installation:

PBV and CPS

Post:

- Drill a ¾" diameter hole, 10" into the center of the post.
- Clean out dust. Fill hole halfway with Simpson Strong-Tie® SET-3G® epoxy anchoring adhesive.
- Insert all-thread rod and allow epoxy to set and cure.
- Secure standoff to post using four 0.148" x 3" nails except PBV which uses four Strong-Drive® SDS Heavy-Duty Connector screws (sold separately).

Concrete:

- Drill a ¾" diameter hole per anchor design (see footnote 2 below).
- Clean out dust. Fill hole halfway with Simpson Strong-Tie SET-3G epoxy anchoring adhesive. Insert post subassembly into hole and allow epoxy to set and cure.
- Post bases do not provide adequate resistance to prevent members from rotating about the base and therefore are not recommended for non-top-supported installations (such as fences or unbraced carports).

Codes: See p. 11 for Code Reference Key Chart

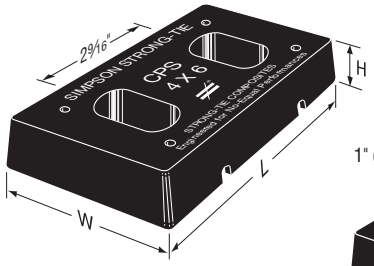

CPS46

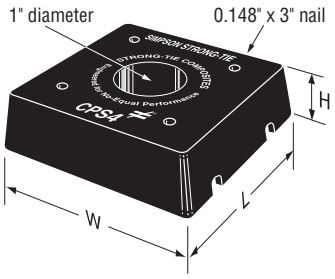

CPS4
(other sizes similar except CPS46)

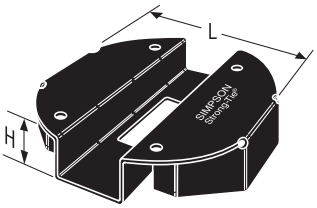

PBVPC

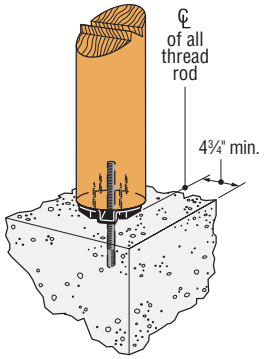

Typical PBV6PC Installation

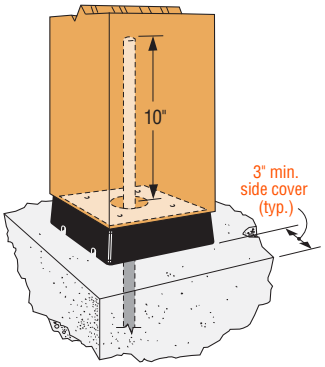

Typical CPS4 Installation

These products are made from non-corrosive materials.

Model No.	Post or Column Size	Dimensions (in.)			Fasteners (in.)		Allowable Loads		Code Ref.
		L	W	H	Post	Anchor Bolt	Uplift (160)	Down (100)	
CPS4	4x4	3¼	3¼	1	(4) 0.148 x 3	⅝	4,490	5,775	—
CPS46	4x6	5⁵⁄₁₆	3⁵⁄₁₆	1	(4) 0.148 x 3	(2) ⅝	4,490	5,925	
CPS5	5x5	4⅛	4⅛	1	(4) 0.148 x 3	⅝	4,490	5,925	
CPS6	6x6	5⁵⁄₁₆	5⁵⁄₁₆	1	(4) 0.148 x 3	⅝	4,490	9,355	
CPS7	8x8	7¼	7¼	1¼	(4) 0.148 x 3	⅝	4,490	10,335	
CPS10	10x10	9¼	9	1	(4) 0.148 x 3	⅝	4,490	19,135	
CPS12	12x12	11	11	1	(4) 0.148 x 3	⅝	4,490	22,870	
PBV6PC	6" dia.	5¼	—	1	(4) ¼ x 3 SDS	⅝	3,800	8,255	IBC, FL, LA
PBV10PC	10" dia.	9³⁄₁₆	—	1	(4) ¼ x 3 SDS	⅝	3,800	21,435	

1. Allowable uplift load capacities are for solid sawn posts with a specific gravity of 0.36 minimum — except the PBV, which is based on round "Viga" (ponderosa pine) wood posts.
2. All allowable uplift loads are based on a lowest ultimate load from testing divided by a safety factor of 4. Concrete anchorage to be designed by others; refer to the Simpson Strong-Tie *Anchoring, Fastening, Restoration and Strengthening Systems for Concrete and Masonry* catalog at **strongtie.com**. Uplift loads shall not exceed those shown in the table.
3. Downloads are calculated based on the standoff bearing area and a concrete strength of 2,500 psi — except the PBV, which is based on the wood's bearing strength (700 psi for ponderosa pine).
4. Allowable loads may not be increased for the duration of the load.
5. **Fasteners:** Nail dimensions are listed diameter by length. SDS screws are Simpson Strong-Tie® Strong-Drive SDS Heavy-Duty Connector screws. See pp. 21–22 for fastener information.
6. Fasteners sold separately.

C-C-2021 ©2021 SIMPSON STRONG-TIE COMPANY INC.

Indoor Architectural Products

Indoor Architectural Products consist of aesthetically pleasing, pre-finished connectors and innovative concealed joist ties designed for exposed wood applications. These connectors provide structural performance while adding a unique appearance feature to a project. There are two styles available to meet different design needs. The Classic Collection features modern smooth edges and clean lines that work as well in a contemporary loft as they would in a century-old warehouse. The Rustic Collection features notched detailing to create the look and feel of a rugged cabin. Used with heavy timbers and beams, these connectors have an antique quality. The product group also features specialty connectors that can stand alone or work with any classic or rustic design. This group includes bearing plates, specialty joist hangers and custom plates.

- **Architectural Finishes**
  Eliminate time-consuming prep work and costly field painting. Available finishes include black powder coat, gray paint and hot-dip galvanized coating.
- **Availability**
  Select products are in stock and readily available. Contact Simpson Strong-Tie for product availability and lead times for non-stocked items.
- **Pre-Engineered and Tested**
  Load-rated products are verified to perform to design loads, unlike custom-designed and -fabricated connectors.
- **Quality Assurance**
  No-Equal quality-controlled manufacturing ensures product consistency and high quality.

Products shown in this section come with black powder coat unless otherwise noted. Most are also available with a galvanized coating or gray primer. Contact Simpson Strong-Tie for availability.

strongtie.com/apg

Product information for the Classic Collection connectors can be found on pp. 78–79 and pp. 90–91.

C-C-2021 ©2021 SIMPSON STRONG-TIE COMPANY INC.

Indoor Architectural Products

Classic and Rustic Collection (cont.)

Material: As noted in tables

Finish: Black powder coat

Installation:

- Use all specified fasteners; see General Notes

Codes: See p. 11 for Code Reference Key Chart

Column Bases

Model No.	Ga.	Dimensions (in.)		Bolts		DF/SP/SPF/HF Allowable Uplift Loads (160)				Code Ref.
						Wind		Seismic		
		W_1	W_2	Qty.	Dia.	Uncracked	Cracked	Uncracked	Cracked	
OCB44	3	3 9/16	3½	2	⅝"	6,445	4,510	5,640	3,945	—
OCB46	3	3 9/16	5½	2	⅝"	6,445	4,510	5,640	3,945	
OCB48	3	3 9/16	7½	2	⅝"	6,445	4,510	5,640	3,945	
OCB66	3	5½	5½	2	⅝"	6,445	4,510	5,640	3,945	
OCB88	3	7½	7½	2	¾"	6,445	4,510	5,640	3,945	
OCB810	3	7½	9½	2	¾"	6,445	4,510	5,640	3,945	

1. Allowable loads have been increased for wind or earthquake loading with no further increase allowed. Reduce where other loads govern.
2. Minimum side cover for full loads is 3" for CBs.
3. Install with bottom of base flush with concrete.
4. Post bases do not provide adequate resistance to prevent members from rotating about the base and therefore are not recommended for installations that lack top support (such as fences or unbraced carports).

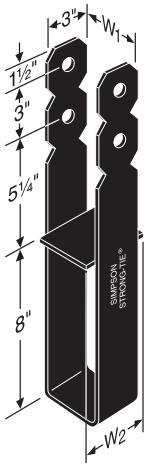

OCB
(3 gauge)

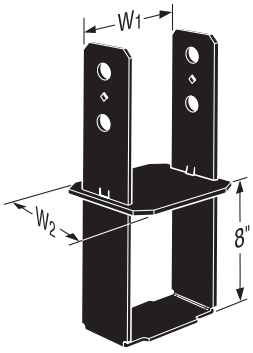

CBPC Classic
(see pp. 78–79 for model no. and allowable loads)

Column Caps

Model No.	Ga.	Dimensions (in.)				Bolts				DF/SP Allowable Loads		Code Ref.
						Beam		Post		Uplift (160)	Down (100)	
		W_1	W_2	L	H	Qty.	Dia.	Qty.	Dia.			
OCC44	3	3⅝	3⅝	9	4½	2	⅝"	2	⅝"	1,465	15,310	—
OCC46	3	3⅝	5½	12	7½	4	⅝"	2	⅝"	2,800	24,060	
OCC66	3	5½	5½	12	7½	4	⅝"	2	⅝"	4,040	30,250	
OCC68	3	5½	7½	12	7½	4	⅝"	2	⅝"	4,040	37,810	
OCC88	3	7½	7½	15	7½	4	¾"	2	¾"	7,440	54,600	

1. Uplift loads have been increased for earthquake or wind loading with no further increase allowed. Reduce where other loads govern.
2. Downloads are determined by nominal sawn beam allowable bearing at 625 psi on seat area.
3. Downloads shall be reduced where limited by capacity of the post.
4. Post sides are assumed to lie in the same vertical plane as the beam sides.

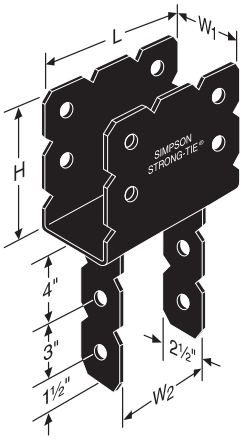

OCC
(3 gauge)

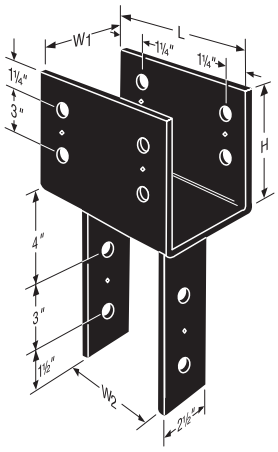

CCPC Classic
(see pp. 90–91 for model no. and allowable loads)

C-C-2021 ©2021 SIMPSON STRONG-TIE COMPANY INC.

Indoor Architectural Products

Classic and Rustic Collection (cont.)

Beam-to-Column Ties

Model No.	Ga.	Dimensions (in.)			Minimum Bolt End and Edge Distances (in.)		Bolts		DF/SPF Allowable Loads		Code Ref.
		W	H	L	d_1	d_2	Qty.	Dia.	Tension/Uplift (100/160)	F_1 (100/160)	
OL	12	2	12	12	2	3½	5	½"	1,435	565	—
OHL	7	2½	12	12	2½	4⅜	5	⅝"	1,535	565	
OT	12	2	12	12	2	3½	6	½"	2,585	815	
OHT	7	2½	12	12	2½	4⅜	6	⅝"	2,585	815	

1. OL, OHL, OT, and OHT must be installed in pairs, with bolts in double shear. A single part with bolts in single shear is not load rated.
2. Allowable loads are based on a minimum member thickness of 3½".
3. OT, OHT loads assume a continuous beam.

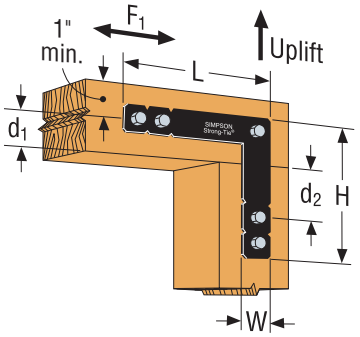

Typical OL/OHL Installation

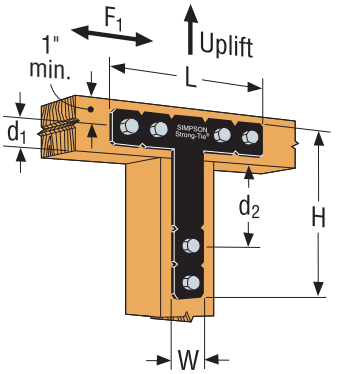

Typical OT/OHT Installation

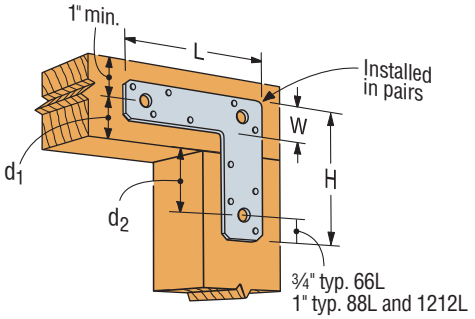

Typical L Installation
(see p. 294 for model no. and allowable loads)

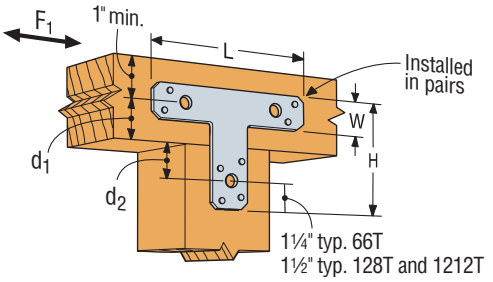

Typical T Installation
(see p. 294 for model no. and allowable loads)

These can be ordered with black powder coat.

Heavy Angles

Model No.	Ga.	Dimensions (in.)		Bolts		Code Ref.
		W	L	Qty.	Dia.	
OHA33	7	3⅛	3	2	¾"	—
OHA36	7	3⅛	6	4	¾"	

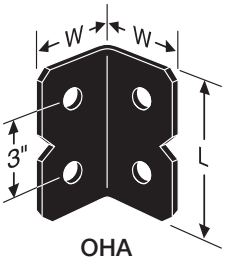

OHA

C-C-2021 ©2021 SIMPSON STRONG-TIE COMPANY INC.

Indoor Architectural Products

Classic and Rustic Collection (cont.)

Strap Ties

Model No.	Ga.	Dimensions (in.)		Bolts		DF/SP/SPF/HF Allowable Loads Tension/Uplift	Code Ref.
		W	L	Qty.	Dia.	(160)	
OS	12	2	12	4	½"	1,565	—
OHS	7	2½	12	4	⅝"	2,015	
OHS135	7	6	13½	4	¾"	5,045	
OHS195	7	6	19½	8	¾"	10,085	

1. Allowable loads have been increased for wind or earthquake loading with no further increase allowed. Reduce where other loads govern.
2. Allowable loads are based on parallel-to-grain loading and a minimum member thickness of 3½", with bolts in single shear. Straps must be centered at the splice joint, and bolt edge distances must meet NDS minimum requirements.
3. Designer must determine allowable loads when combining bolts parallel and perpendicular to grain.

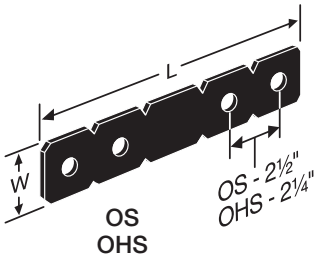

OS
OHS

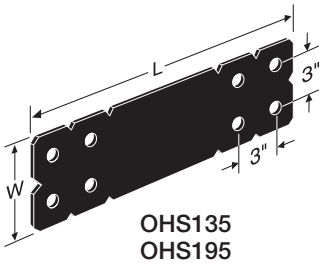

OHS135
OHS195

Joist Hangers

Model No.	Ga.	Dimensions (in.)		Bolts		DF/SP Allowable Loads			Code Ref.
		W	H	Header	Joist	Uplift (160)	Floor (100)	Roof (125)	
OU46	7	3⁹⁄₁₆	5	(2) ¾	(1) ¾	685	1,255	1,560	—
OU48	7	3⁹⁄₁₆	7	(4) ¾	(2) ¾	1,365	2,510	3,120	
OU410	7	3⁹⁄₁₆	9	(4) ¾	(2) ¾	1,365	2,510	3,120	
OU412	7	3⁹⁄₁₆	11	(6) ¾	(3) ¾	2,050	3,770	4,680	
OU414	7	3⁹⁄₁₆	13	(6) ¾	(3) ¾	2,050	3,770	4,680	
OU68	7	5½	7	(4) ¾	(2) ¾	1,365	2,510	3,120	
OU610	7	5½	9	(4) ¾	(2) ¾	1,365	2,510	3,120	
OU612	7	5½	11	(6) ¾	(3) ¾	2,050	3,770	4,680	
OU614	7	5½	13	(6) ¾	(3) ¾	2,050	3,770	4,680	
OU810	7	7½	9	(4) ¾	(2) ¾	1,365	2,510	3,120	
OU812	7	7½	11	(6) ¾	(3) ¾	2,050	3,770	4,680	
OU814	7	7½	13	(6) ¾	(3) ¾	2,050	3,770	4,680	

1. Load values allowed assume a carrying member of not less than 3½".
2. Roof loads are 125% of floor loads unless limited by other criteria. Floor loads may be adjusted for load durations according to the code provided they do not exceed those in the roof column.
3. Additional glulam beam widths are available. Add an "X" to the name and specify width — e.g., OU68X, W = 5.25.
4. Skew and slope options are not available.

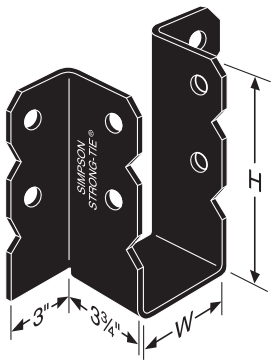

OU
(7 gauge)

C-C-2021 ©2021 SIMPSON STRONG-TIE COMPANY INC.

Ornamental — Joist Hanger

The OHU ornamental joist hangers are heavy-duty, load-rated joist hangers that are attached with ¼" x 3" Strong-Drive® double-barrier coating SDS Heavy-Duty Connector screws (supplied with product).

Material: 12 gauge

Finish: Black powder coat

Options:

- No modifications

Codes: See p. 11 for Code Reference Key Chart

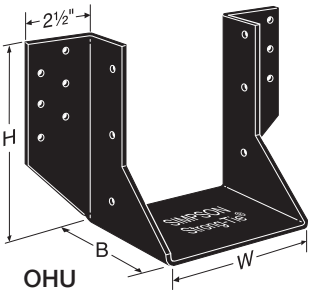

OHU

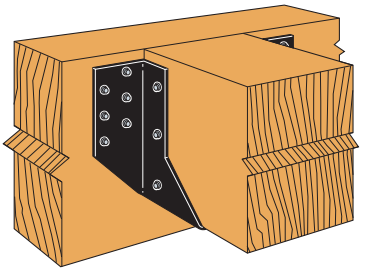

Typical OHU Installation

Model No.	Joist Size	Ga.	Dimensions (in.)			No. of ¼" x 3" SDS Wood Screws		DF/SP Allowable Loads				SPF/HF Allowable Loads				Code Ref.
			W	H	B	Face	Joist	Uplift (160)	Floor (100)	Snow (115)	Roof (125)	Uplift (160)	Floor (100)	Snow (115)	Roof (125)	
OHU46-SDS3	4x6	12	3⁹⁄₁₆	5	4	6	4	1,930	2,520	2,900	3,150	1,390	1,800	2,070	2,250	—
OHU48-SDS3	4x8	12	3⁹⁄₁₆	6¾	4	8	6	2,765	3,360	3,865	4,200	1,990	2,400	2,760	3,000	
OHU410-SDS3	4x10	12	3⁹⁄₁₆	8¾	4	12	6	2,765	5,040	5,795	6,300	1,990	3,600	4,140	4,500	
OHU412-SDS3	4x12	12	3⁹⁄₁₆	10¾	4	12	8	3,565	5,040	5,795	6,300	2,570	3,600	4,140	4,500	
OHU414-SDS3	4x14	12	3⁹⁄₁₆	12¾	4	14	10	3,565	5,880	6,760	7,350	2,570	4,200	4,830	5,250	
OHU66-SDS3	6x6	12	5½	5	4	6	4	1,930	2,520	2,900	3,150	1,390	1,800	2,070	2,250	
OHU68-SDS3	6x8	12	5½	7	4	12	6	2,765	5,040	5,795	5,955	1,990	3,600	4,140	4,290	
OHU610-SDS3	6x10	12	5½	9	4	14	6	2,765	5,880	6,760	6,885	1,990	4,200	4,830	4,960	
OHU612-SDS3	6x12	12	5½	11	4	16	8	3,565	6,720	7,730	7,815	2,570	4,800	5,520	5,630	
OHU614-SDS3	6x14	12	5½	13	4	18	10	3,565	7,560	8,695	8,745	2,570	5,400	6,210	6,300	

1. Uplift loads have been increased for earthquake or wind loading with no further increase allowed. Reduce where other loads govern.
2. **Fasteners:** SDS screws are Simpson Strong-Tie® Strong-Drive SDS Heavy-Duty Connector screws. See pp. 21–22 for fastener information.

Special Order Parts

Simpson Strong-Tie can make a variety of flat and bent steel shapes, which include gusset plates for heavy timber trusses, custom ornamental shapes and retaining plates.

Material: 3 gauge maximum

Finish: Galvanized, black powder coat, Simpson Strong-Tie gray paint, stainless steel. Contact Simpson Strong-Tie for availability.

To Obtain a Quote:

- Supply a CAD drawing in .dxf format complete with plate dimensions, hole diameter and locations, steel thickness, desired finish (Simpson Strong-Tie gray paint, black powder-coat, HDG or raw steel)
- Total plate shape and size up to maximum dimensions of 48" x 48" (approx. ⅟₁₆" tolerance)
- Simpson Strong-Tie does not provide product engineering or load values for special order plates
- Contact Simpson Strong-Tie for pricing information
- Refer to General Notes, note g on p. 17 for additional information

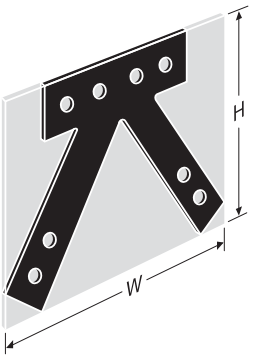

"W" and "H" indicate the envelope size of the steel shape.

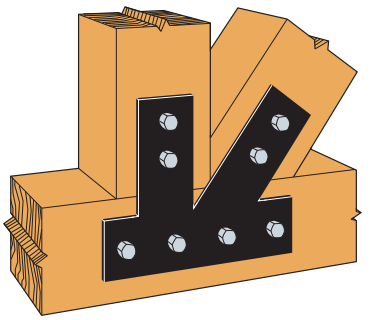

Typical Installation
(plate shown has black powder coat)

C-C-2021 ©2021 SIMPSON STRONG-TIE COMPANY INC.

UA/HUA — Heavy-Duty Joist Hangers

The UA/HUA hangers are heavy-duty, load-rated joist hangers that are attached with ¼" x 3" Strong-Drive® SDS Heavy-Duty Connector screws (supplied with product). These hangers can be ordered hot-dip galvanized for exterior use.

Finish: Black paint, black powder coat or hot-dip galvanized

Ordering:

Specify model number, W dimension and finish.

Ordering Examples:

- UA9 – W = 4.625 (For 3-ply 2x10) black paint.
- HUA24PC – W = 6.875 (For 6¾ x 24 glulam) PC = Powder Coated.
- UA15HDG – W = 5.375 (For 5¼ x 16 PSL) HDG = Hot-Dip Galvanized.
- HUA available with concealed flanges. Specify HUAC.

Codes: See p. 11 for Code Reference Key Chart

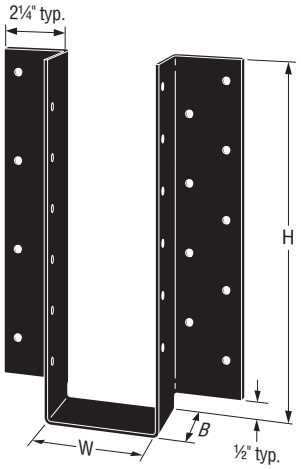

UA
(HUA similar)

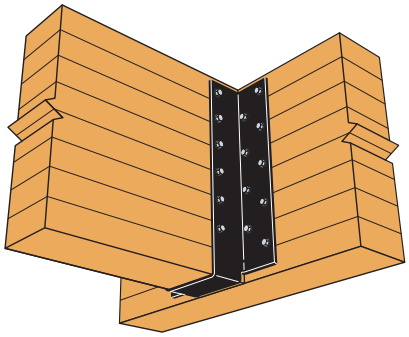

Typical UA12 Installation

These products are available with additional corrosion protection. For more information, see p. 14.

Model No.	Ga.	Dimensions (in.)				SDS Fasteners		DF/SP Allowable Loads				SPF/HF Allowable Loads				Code Ref.
		H	W		B			Uplift	Floor	Snow	Roof	Uplift	Floor	Snow	Roof	
			Min.	Max.		Face	Joist	(160)	(100)	(115)	(125)	(160)	(100)	(115)	(125)	
UA6	12	5¾	3⅛	7¼	2 1/16	(10) ¼" x 3"	(4) ¼" x 3"	1,930	4,050	4,050	4,050	1,390	2,915	2,915	2,915	—
UA7.5	12	7¼	3⅛	7¼	2 1/16	(12) ¼" x 3"	(6) ¼" x 3"	2,765	5,040	5,285	5,285	1,990	3,600	3,805	3,805	
UA9	12	8¾	3⅛	7¼	2 1/16	(14) ¼" x 3"	(8) ¼" x 3"	3,565	5,880	6,520	6,520	2,570	4,200	4,695	4,695	
UA10.5	12	10¼	3⅛	7¼	2 1/16	(16) ¼" x 3"	(10) ¼" x 3"	4,600	6,720	7,730	7,750	3,310	4,800	5,520	5,580	
UA12	12	11¾	3⅛	7¼	2 1/16	(18) ¼" x 3"	(12) ¼" x 3"	5,520	7,560	8,695	8,985	3,975	5,400	6,210	6,470	
UA13.5	12	13¼	3⅛	7¼	2 9/16	(20) ¼" x 3"	(14) ¼" x 3"	6,440	8,400	9,660	10,500	4,635	6,000	6,900	7,500	
UA15	12	14¾	3⅛	7¼	2 9/16	(22) ¼" x 3"	(16) ¼" x 3"	7,360	9,240	10,625	11,550	5,300	6,600	7590	8,250	
UA16.5	12	16¼	3⅛	7¼	2 9/16	(24) ¼" x 3"	(18) ¼" x 3"	8,280	10,080	11,590	12,600	5,960	7,200	8,280	9,000	
UA18	12	17¾	3⅛	7¼	2 9/16	(26) ¼" x 3"	(20) ¼" x 3"	9,200	10,920	12,560	13,650	6,625	7,800	8,970	9,750	
HUA19.5	7	19¼	5⅛	7¼	2 9/16	(28) ¼" x 3"	(14) ¼" x 3"	6,440	11,760	13,525	14,590	4,635	8,400	9,660	10,440	
HUA22.5	7	22¼	5⅛	7¼	2 9/16	(32) ¼" x 3"	(18) ¼" x 3"	8,280	13,440	15,455	16,690	5,960	9,600	11,040	11,940	
HUA24	7	23¾	5⅛	7¼	2 9/16	(34) ¼" x 3"	(20) ¼" x 3"	9,200	14,280	16,420	17,740	6,625	10,200	11,730	12,690	

1. Uplift loads have been increased for earthquake or wind loading with no further increase allowed. Reduce where other loads govern.
2. Downloads are based on $F_{c\perp}$ = 565 psi for DF/SP and $F_{c\perp}$ = 405 psi for SPF/HF.
3. DF/SP allowable loads may be used for glulam, LVL, LSL, and PSL with minimum specific gravity = 0.50 and minimum $F_{c\perp}$ = 565 psi.
4. Specify "W" dimension when ordering.
5. Header height shall be greater than or equal to hanger height.
6. Header thickness shall be 3" minimum.

C-C-2021 ©2021 SIMPSON STRONG-TIE COMPANY INC.

Fastener Application Guide

The *Fastening Systems* catalog is your guide to comprehensive information for our complete line of screws and nails, collated nails and staples, collated screws, and Quik Drive® auto-feed screw driving systems. Visit **strongtie.com** to download the latest version of our catalog or to find more information. For current information about US patents or patents pending, go to **strongtie.com/patents**. In the *Fastening Systems* catalog, you will find product, installation and technical details about the following applications:

Ledger

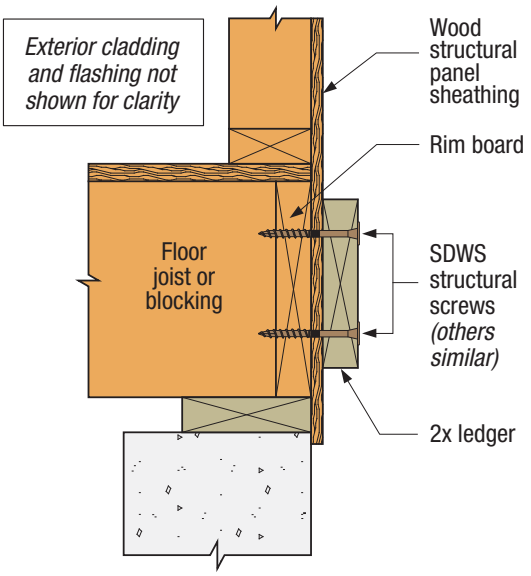

Strong-Drive® SDWS TIMBER Screw (Exterior Grade)

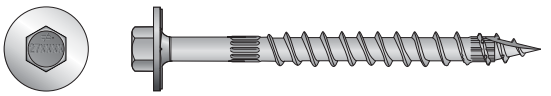

Strong-Drive SDWH TIMBER-HEX HDG Screw

Strong-Drive SDWS TIMBER SS Screw

Roof-to-Wall / Stud-to-Plate / Stud-to-Sill

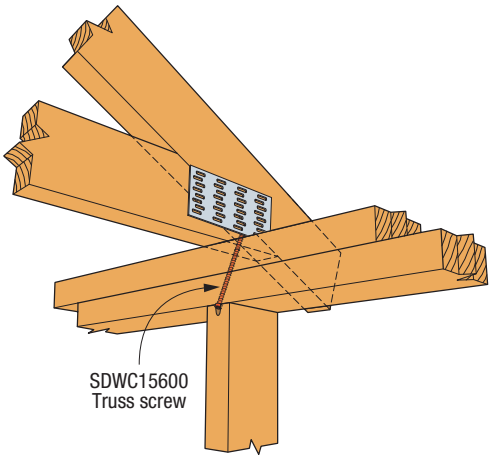

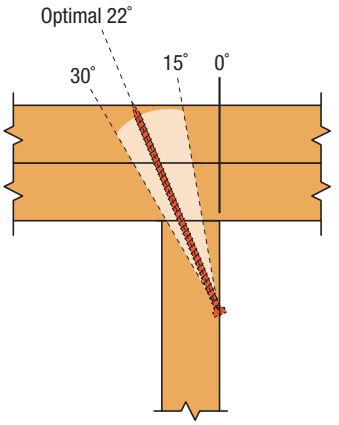

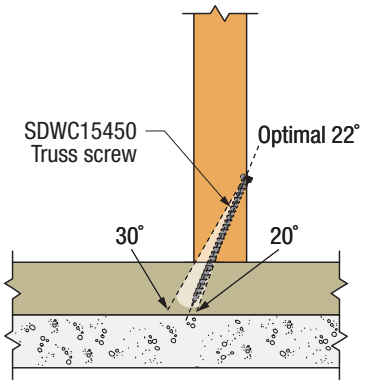

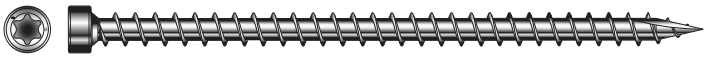

Strong-Drive SDWC TRUSS Screw (SDWC15450)

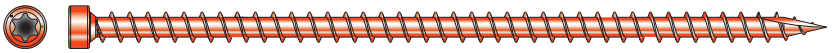

Strong-Drive SDWC TRUSS Screw (SDWC15600)

SDWC15600 Installation Using Quik Stik™ Rafter and Truss Fastening System

C-C-2021 ©2021 SIMPSON STRONG-TIE COMPANY INC.

Non-Load-Bearing Partition Wall Connection

SDPW14312 – Strong-Drive® SDPW Deflector Screw
0.140" x 3½" — Blue

SDPW14500 – Strong-Drive® SDPW Deflector Screw
0.140" x 5" — Orange

SDPW19600 – Strong-Drive® SDPW Deflector Screw
0.195" x 6" — Grey

SDPW Deflector Screw Usage

SDPW14312

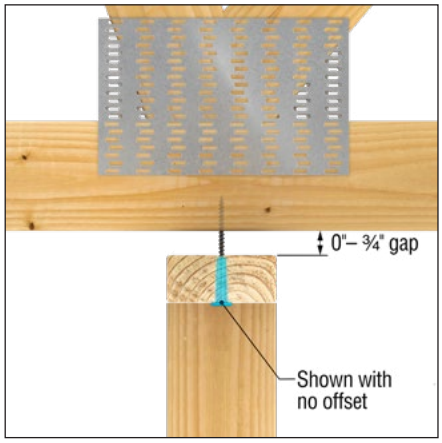

3½" 3½" length for single 2x plate connections, provide up to a ¾" gap (between top plate and truss/joist).

SDPW14500

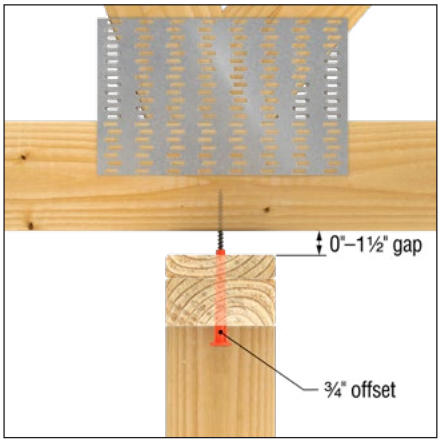

5" 5" length for built-up top plate (single 2x plus ¾" member, to be connected per code), providing a 0" to 1½" gap.

SDPW19600

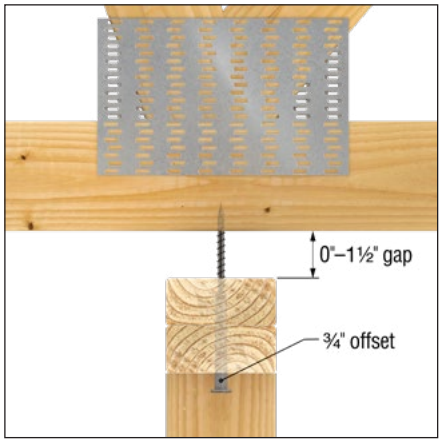

6" 6" length for (2) 2x top plate connections, providing a 0" to 1½" gap

C-C-2021 ©2021 SIMPSON STRONG-TIE COMPANY INC.

Fastener Application Guide

Multi-Ply Truss

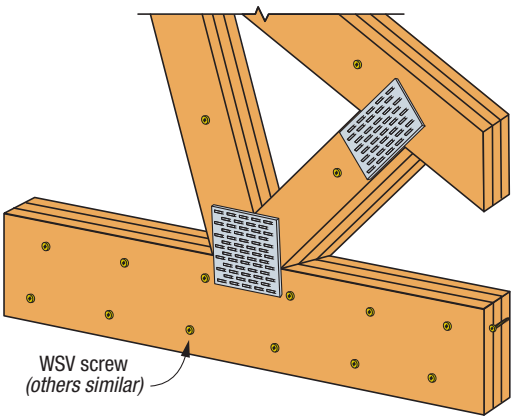

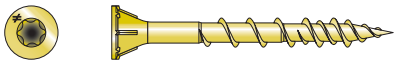

Strong-Drive® WSV SUBFLOOR Screw
Size range: #9 x 1¾", 2", 2½", 3"

Strong-Drive SDW TRUSS-PLY and EWP-PLY Screws
Size range:
SDW Truss-Ply — 0.220" x 2 15⁄16", 4⅜", 4⅝", 6", 6⅜"
SDW EWP-Ply — 0.220" x 3⅜", 5", 6¾"

Multi-Ply Floor Truss

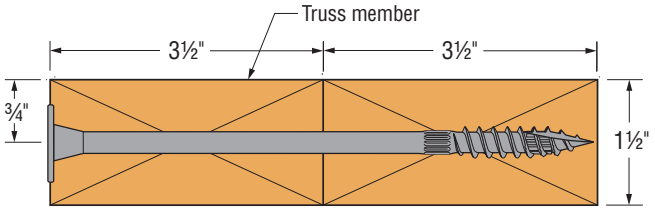

Strong-Drive SDW TRUSS-PLY and EWP-PLY Screws
Size range:
SDW Truss-Ply — 0.220" x 2 15⁄16", 4⅜", 4⅝", 6", 6⅜"
SDW EWP-Ply — 0.220" x 3⅜", 5", 6¾"

Multi-Ply Beam or Girder

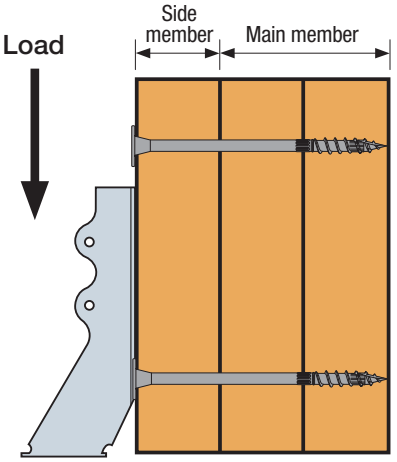

Strong-Drive SDW TRUSS-PLY and EWP-PLY Screws
Size range:
SDW Truss-Ply — 0.220" x 2 15⁄16", 4⅜", 4⅝", 6", 6⅜"
SDW EWP-Ply — 0.220" x 3⅜", 5", 6¾"

C-C-2021 ©2021 SIMPSON STRONG-TIE COMPANY INC.

Built-Up Columns

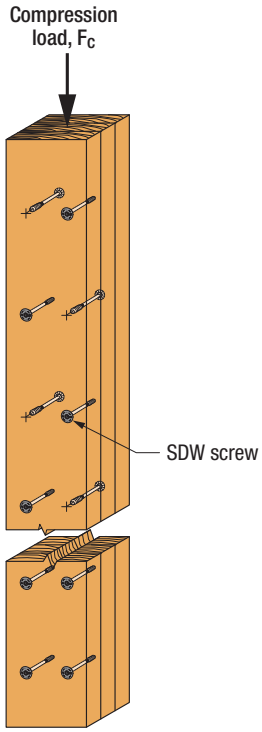

Strong-Drive SDW TRUSS-PLY and EWP-PLY Screws

Size range:
SDW Truss-Ply — 0.220" x 2 15⁄16", 4 3⁄8", 4 5⁄8", 6", 6 3⁄8"
SDW EWP-Ply — 0.220" x 3 3⁄8", 5", 6 3⁄4"

Sole-to-Rim

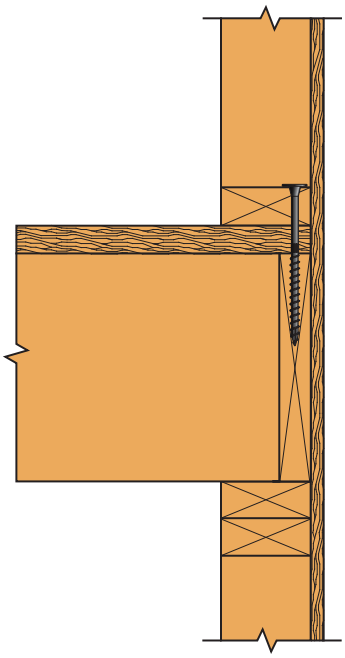

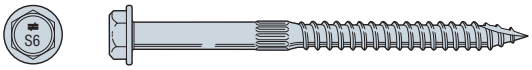

Strong-Drive SDS HEAVY-DUTY CONNECTOR Screw

Size range: Stainless steel — ¼" x 1 ½" – 3 ½"
Double barrier — ¼" x 1" – 8"

Strong-Drive SDWS TIMBER Screw (Interior Grade)

Size range: 0.195" x 6", 7 ½"; 0.220 x 4" – 15"

Strong-Drive SDWV SOLE-TO-RIM Screw

Size: #10 x 4"

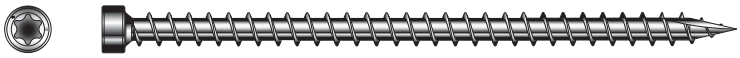

Strong-Drive SDWC TRUSS Screw (SDWC15450)

Size: 0.152" x 4 ½"

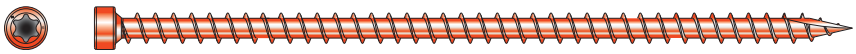

Strong-Drive SDWC TRUSS Screw (SDWC15600)

Size: 0.152" x 6"

C-C-2021 ©2021 SIMPSON STRONG-TIE COMPANY INC.

Fastener Application Guide

Subfloor

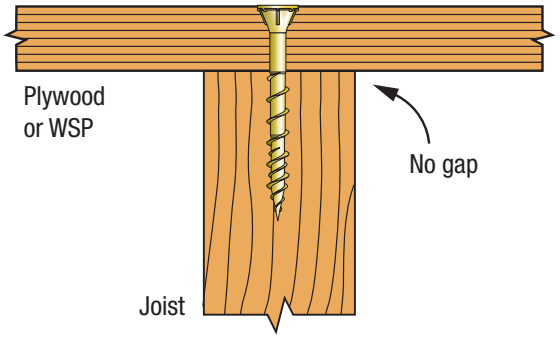

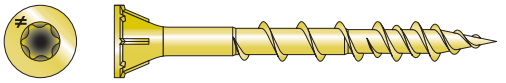

Strong-Drive® WSV SUBFLOOR Screw
Size range: #9 x 1¾", 2", 2½", 3"

Quik Drive® PRO250G2 System

Decking

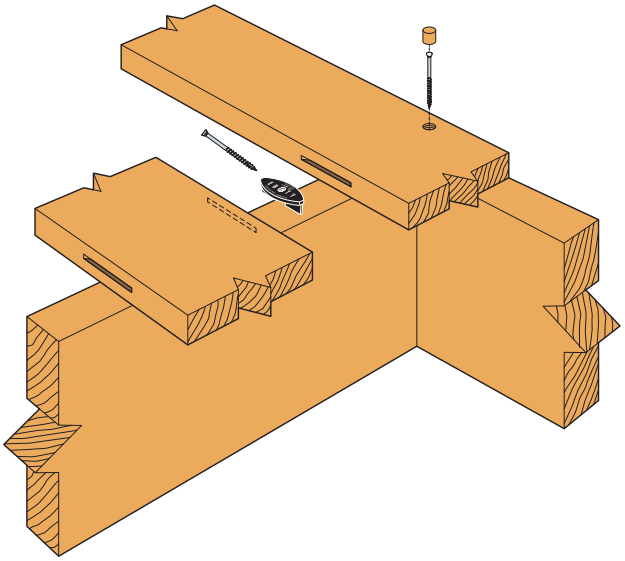

EB-TY® Premium Hidden Deck-Fastening™ System

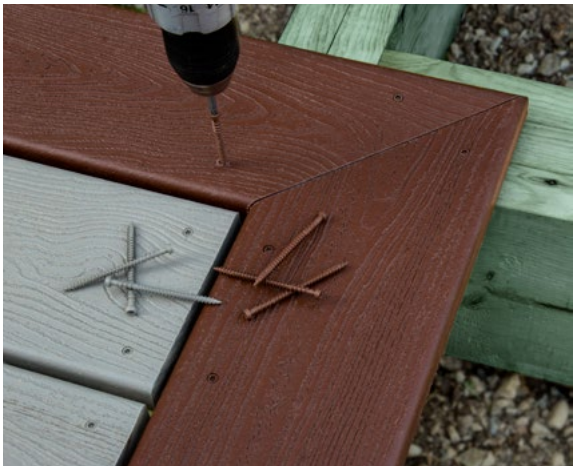

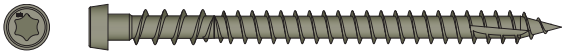

Deck-Drive™ DCU COMPOSITE Screw
Size: #10 x 2¾"

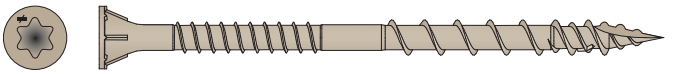

Deck-Drive DSV WOOD Screw
Size range: #8 x 1¼", 1⅝"; #10 x 2" – 4"

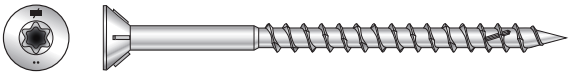

Deck-Drive DWP WOOD SS Screw
Size range: #8 x 1¼" – 3"; #10 x 2" – 4½"

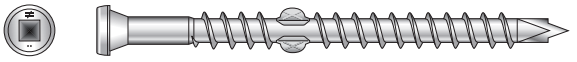

Deck-Drive DHPD HARDWOOD Screw
Size: #10 x 2½"

C-C-2021 ©2021 SIMPSON STRONG-TIE COMPANY INC.

Fastener Application Guide

Floor-to-Floor

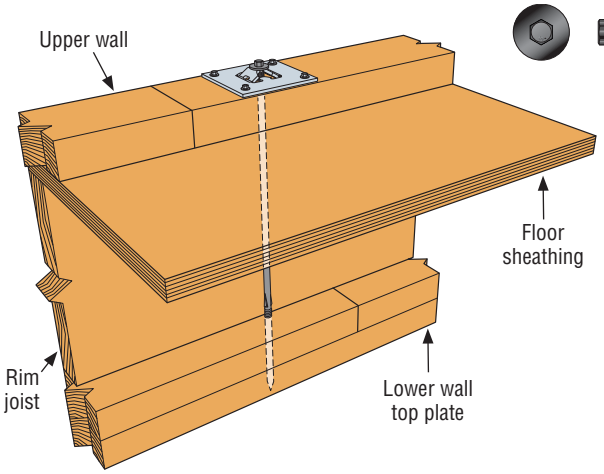

Strong-Drive® SDWF FLOOR-TO-FLOOR Screw
Size range: 0.270" x 16" – 30"

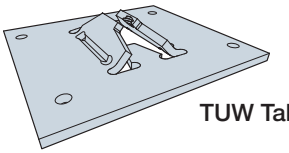

TUW Take-Up Washer

Strong-Drive SDWS TIMBER Screw (Interior Grade)
Size range: 0.195" x 6", 7½" ; 0.220 x 4" – 15"

CLT Floor Connection

CLT Half-Lap Connection

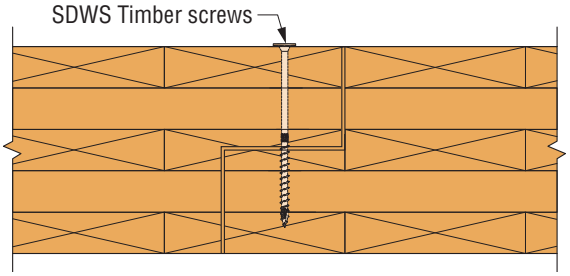

Strong-Drive SDWS TIMBER Screw (Exterior Grade)
Size range: 0.220" x 3" – 10"

Strong-Drive SDWS TIMBER Screw (Interior Grade)
Size range: 0.195" x 6", 7½" ; 0.220" x 4" – 15"

CLT Spline Connection

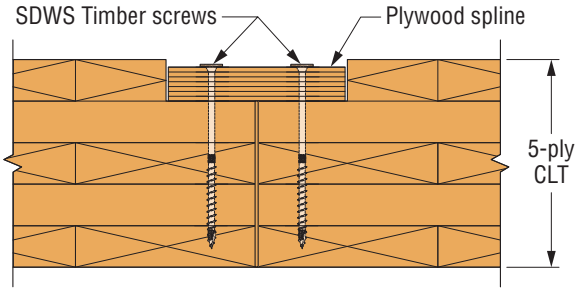

Strong-Drive SDCP TIMBER-CP Screw
Size range: 0.220" x 3⅛" – 11¾"; 0.275" x 14"

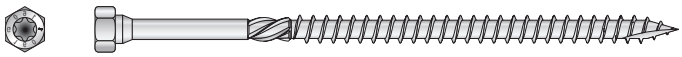

Strong-Drive SDHR COMBO-HEAD Screw
Size range: 0.275" x 4", 6¼"; 0.315" x 4", 6¼"

CLT to Steel Beam Connection

For more information and load values, refer to **strongtie.com/masstimber** or the *Fastening Systems Technical Guide* (C-F-2019TECHSUP) at **strongtie.com**.

C-C-2021 ©2021 SIMPSON STRONG-TIE COMPANY INC.

Wood-to-Steel

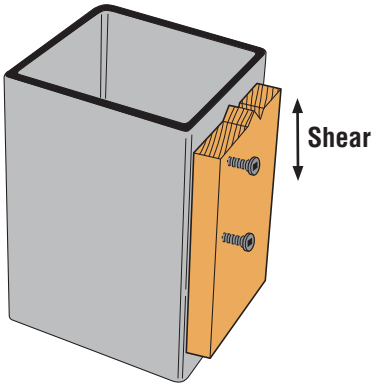

Strong-Drive® TB WOOD-TO-STEEL Screw
Size range: #12 x 1¾", 2⅜"; #14 x 2⅜", 3"

(Also available collated for Quik Drive® systems)

Suspended Utilities

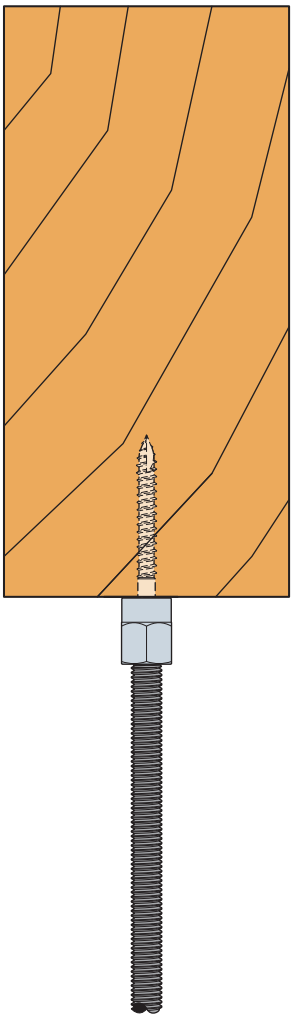

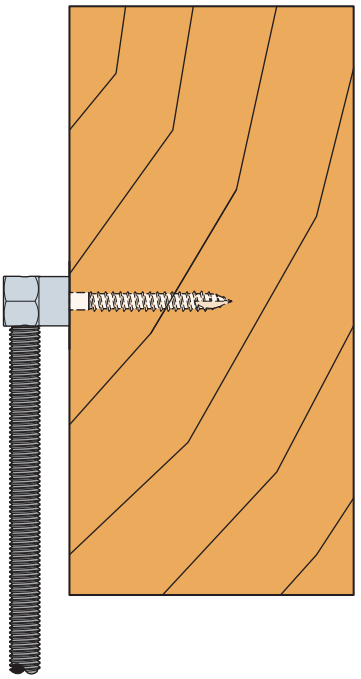

RWV
Vertical Wood
Rod Hanger

RWH
Horizontal Wood Rod Hanger

C-C-2021 ©2021 SIMPSON STRONG-TIE COMPANY INC.

Bulk Strong-Drive® Connector Nails

Simpson Strong-Tie nails and structural fasteners have been developed as the optimum fasteners for connector products. Special lengths afford economy of purchase and installation, and depth compatibility with framing members.

Material: Carbon steel, stainless steel

For power-driven nails, see note "L" in General Instructions for the Installer, p. 18 and visit **strongtie.com** for technical bulletins.

Finish: Hot-dip galvanized, bright (no coating), 316 stainless steel

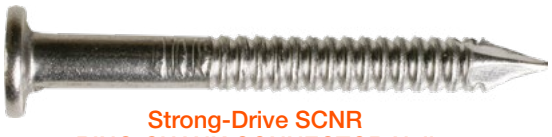

Strong-Drive SCNR
RING-SHANK CONNECTOR Nail

Strong-Drive SCN
SMOOTH-SHANK CONNECTOR Nail

SCN Smooth-Shank Head Stamps

SCNR Ring-Shank Head Stamps

Strong-Drive SCN SMOOTH-SHANK CONNECTOR Nail — Hot-Dip Galvanized

Diameter x Length (in.)	Head Diameter (in.)	Approx. Count per lb.	1 lb. Model No. (Sold by the pound)	Retail Pack Count	Retail Pack Model No.	Mini-Bulk Count	Mini-Bulk Model No.
0.131 x 1½	0.28	150	N8	150	N8DHDG-R	750	N8D5HDG-R
0.148 x 1½	0.31	120	N10	120	N10DHDG-R	600	N10D5HDG-R
0.148 x 3	0.31	—	—	50	10DHDG-R	250	10D5HDG-R
0.162 x 3½	0.34	—	—	40	16DHDG-R	200	16D5HDG-R

Strong-Drive SCNR RING-SHANK CONNECTOR Nail — Hot-Dip Galvanized

Diameter x Length (in.)	Head Diameter (in.)	Approx. Count per lb.	1 lb. Model No. (Sold by the pound)
0.250 x 2½	0.50	27	N54AHDG

Strong-Drive SCNR RING-SHANK CONNECTOR Nail — Bright

Diameter x Length (in.)	Head Diameter (in.)	Approx. Count per lb.	1 lb. Model No. (Sold by the pound)
0.250 x 2½	0.50	27	N54A

Strong-Drive SCNR RING-SHANK CONNECTOR Nail — 316 Stainless Steel

Diameter x Length (in.)	Head Diameter (in.)	Approx. Count per lb.	1 lb. Model No. (Sold by the pound)	Retail Pack Count	Retail Pack Model No.	Mini-Bulk Count	Mini-Bulk Model No.	Bulk Bucket Count	Bulk Bucket Model No.
0.131 x 1½	0.28	155	SSNA8	150	SSNA8D	750	SSNA8D5	3,750	SSNA8DB
0.131 x 2½	0.28	94	SSA8D	90	SSA8DD	450	SSA8D5	2,250	SSA8DB
0.148 x 1½	0.31	123	SSNA10	120	SSNA10D	600	SSNA10D5	3,000	SSNA10DB
0.148 x 3	0.31	63	SSA10D	50	SSA10DD	250	SSA10D5	1,250	SSA10DB
0.162 x 3½	0.34	44	SSA16D	40	SSA16DD	200	SSA16D5	1,000	SSA16DB

1. Use HDG nails with ZMAX® and HDG products. Use stainless-steel nails with stainless-steel products.
2. HDG nails sold by Simpson Strong-Tie meet the specifications of ASTM A153 Class D. Stainless-steel nails are Type 316 stainless steel.

C-C-2021 ©2021 SIMPSON STRONG-TIE COMPANY INC.

Collated Strong-Drive® Connector Nails

Simpson Strong-Tie carbon-steel Strong-Drive 33° SCN Smooth-Shank Connector nails and stainless-steel Strong-Drive 33° SCNR Ring-Shank Connector nails are designed to provide installers with a power-driven alternative to hand-driven nails. The nails are approved for use in many popular Simpson Strong-Tie products and serve as a replacement for ring-shank hand-driven common nails in a variety of Simpson Strong-Tie connector applications. Available in 25-nail, paper-tape collated strips.

Material: Carbon steel, hot-dip galvanized, bright (no coating), stainless-steel, ring shank

Finish: Hot-dip galvanized, bright (no coating), 316 stainless steel

Installation:

- Use all specified fasteners; see General Notes.
- For power-driven nails, see note "L" in General Instructions for the Installer, p. 18 and visit **strongtie.com** for technical bulletins.
- Follow the tool manufacturer's instructions and use the appropriate safety equipment.
- Tools with nail hole-locating mechanisms should be used.
- Paper-tape collated nails are compatible with a variety of popular power nailers. For more information, access our Fastener Finder software or download the Simpson Strong-Tie *Fastening Systems* catalog at **strongtie.com**.
- For applications involving alternate nails, refer to pp. 21–22.

Strong-Drive 33°
SCN SMOOTH-SHANK
CONNECTOR Nail

8 0.131" x 1½" | 8 0.131" x 2½" | 10 0.148" x 1½" | 10 0.148" x 2½"

SCNR Ring-Shank Head Stamps

8 0.131" x 1½" | 8 0.131" x 2½" | 10 0.148" x 1½" | 10 0.148" x 2½" | 16 0.162" x 2½"

SCN Smooth-Shank Head Stamps

Strong-Drive Connector Nails — Collated 33°

Dimension (in.)	SCN Hot Dip Galvanized				SCN Bright		SCNR Type 316 Stainless Steel	
	Contractor Pack		Mini Bulk		Mini Bulk		Mini Bulk	
	Fasteners per Pack	Model No.	Fasteners per Pack	Model No.	Fasteners per Pack	Model No.	Fasteners per Pack	Model No.
0.131 x 1½	500	N8HDGPT500	4,000	N8HDGPT4000	4,000	N8BRPT4000	1,500	T10A150MCN
0.131 x 2½	500	8DHDGPT500	2,500	8DHDGPT2500	—	—	1,000	T10A250MCN
0.148 x 1½	500	N10HDGPT500	3,000	N10HDGPT3000	3,000	N10BRPT3000	1,500	T9A150MCN
0.148 x 2½	500	N10DHDGPT500	2,500	N10DHDGPT2500	2,500	N10DBRPT2500	1,000	T9A250MCN
0.162 x 2½	500	N16HDGPT500	2,000	N16HDGPT2000	—	—	—	—

1. Use HDG nails with ZMAX® and HDG products.
2. HDG nails sold by Simpson Strong-Tie meet the specifications of ASTM A153 Class D. Stainless-steel nails are Type 316 stainless steel.

C-C-2021 ©2021 SIMPSON STRONG-TIE COMPANY INC.

Strong-Drive® SDS HEAVY-DUTY CONNECTOR Screw

Structural Fastener

The Simpson Strong-Tie® Strong-Drive SDS Heavy-Duty Connector screw is a ¼"-diameter structural wood screw ideal for various connector installations as well as wood-to-wood applications. It installs with no predrilling and has been extensively tested in various applications.

For more information about package quantities, visit **strongtie.com.**

Features:

- The Type-17 point reduces installation torque and makes driving easier with no predrilling and minimal wood splitting.
- Available with a double-barrier coating or in Type 316 stainless steel. Carbon steel loads apply to corresponding stainless-steel models.
- ⅜" hex washer head is stamped with the No-Equal sign and fastener length for easy identification after installation.
- For the ⅜" hex-head driver bit, order model no. BITHEXR38-R1.

Material: Heat-treated carbon steel, Type 316 stainless steel

Finish: Double barrier (all lengths); Type 316 stainless steel (1½" thru 3½" lengths)

Codes: See p. 11 for Code Reference Key Chart

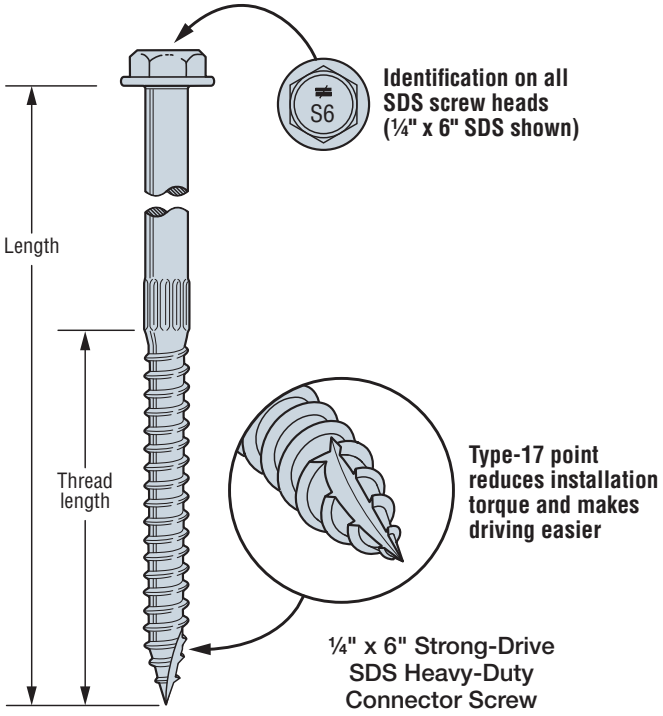

These products are available with additional corrosion protection. For more information, see p. 14.

SS For stainless-steel fasteners, see p. 21.

Strong-Drive SDS Heavy-Duty Connector Screw

	Model No.	Size (in.)	Thread Length (in.)	Fasteners per Carton[6]	DF/SP Allowable Loads (lb.)[4]						SPF/HF Allowable Loads (lb.)[4]						Code Ref.
					Shear (100)					Withdrawal[5] (100)	Shear (100)					Withdrawal[5] (100)	
					Wood Side Plate[3]		Steel Side Plate				Wood Side Plate[3]		Steel Side Plate				
					1½"	1¾" SCL	16 ga.	14 ga. and 12 ga.	10 ga. or Greater	Wood or Steel Side Plate	1½"	1¾" SPF LVL	16 ga.	14 ga. and 12 ga.	10 ga. or Greater	Wood or Steel Side Plate	
SS	SDS25112	¼ x 1½	1	1,500	—	—	250	250	250	170	—	—	180	180	180	120	IBC, FL, LA
SS	SDS25200	¼ x 2	1¼	1,300	—	—	250	290	290	215	—	—	180	210	210	150	
SS	SDS25212	¼ x 2½	1½	1,100	190	—	250	390	420	255	135	—	180	280	300	180	
SS	SDS25300	¼ x 3	2	950	280	—	250	420	420	345	200	—	180	300	300	240	
SS	SDS25312	¼ x 3½	2¼	900	340	340	250	420	420	385	245	245	180	300	300	270	
	SDS25412	¼ x 4½	2¾	800	350	340	250	420	420	475	250	245	180	300	300	330	
	SDS25500	¼ x 5	2¾	500	350	340	250	420	420	475	250	245	180	300	300	330	
	SDS25600	¼ x 6	3¼	600	350	340	250	420	420	560	250	245	180	300	300	395	
	SDS25800	¼ x 8	3¼	400	350	340	250	420	420	560	250	245	180	300	300	395	

1. Screws may be provided with the 4CUT™ or Type-17 point.
2. Strong-Drive SDS Heavy-Duty Connector screws install best using a low-speed ½" drill with a ⅜" hex-head driver.
3. Shear values are valid for connections between two members with full thread penetration into the main member. For other wood side plate values, see *Fastening Systems Technical Guide* (C-F-2019TECHSUP) at **strongtie.com**.
4. Allowable loads are shown at a wood load duration factor of C_D = 1.0. Loads may be increased for load duration per the building code up to a C_D = 1.6. Tabulated values must be multiplied by all applicable NDS adjustment factors.
5. Withdrawal loads shown are in pounds (lb.) and are based on penetration of the screw's entire threaded section into the main member. If thread penetration into the main member is less than the Thread Length as shown in the table for DF/SP, reduce allowable load by 172 lb./in. of thread not in main member. Use 121 lb./in. for SPF/HF.
6. Fasteners per Carton represents the quantity of screws that are available in bulk packaging. Screws are also available in mini-bulk and retail packs. Refer to Simpson Strong-Tie *Fastening Systems* catalog (C-F-2019) at **strongtie.com**.
7. LSL wood-to-wood applications that require 4½", 5", 6" or 8" SDS Heavy-Duty Connector screws are limited to interior-dry use only.
8. Where predrilling is required for Strong-Drive SDS Heavy-Duty Connector screws, predrill diameter is 5⁄32".
9. Minimum spacing, edge, and end distance requirements are listed in ICC-ES ESR-2236. For smaller spacing, please contact Simpson Strong-Tie Engineering.

C-C-2021 ©2021 SIMPSON STRONG-TIE COMPANY INC.

Strong-Drive® SD CONNECTOR and SD CONNECTOR SS Screws

Structural Fastener

Simpson Strong-Tie offers the Strong-Drive SD Connector (SD) and SD Connector SS (SD SS) screws for use with our connectors. Designed to replace nails in certain products, the load-rated SD and SD SS screws have been tested and approved for use in many popular Simpson Strong-Tie® connectors. In certain applications screws are easier and more convenient to install than nails, and the single-fastener load values achieved by the SD9 and SD10 exceed those of typical 0.148" x 3" or 0.162" x 3½" nails, respectively.

When selecting fasteners for connectors, match both the base metal and corrosion resistance to maximize connection durability. Stainless steel connector screws should be used with stainless steel connectors. Galvanized screws should be used with galvanized connectors. When galvanized and stainless steel parts are used together, galvanic corrosion can occur because the two metals (zinc and stainless steel) are electrochemically dissimilar. If the screw is galvanized and the connector is stainless steel, corrosion of the screw would begin with sacrifice of the zinc in the galvanized coating and then proceed with corrosion of the steel screw. Whether due to a galvanic or oxidative electrochemical process, corrosion can lead to the need for premature repair or failure of the connection.

The SD and SD SS screws feature an optimized shank, specifically designed for compatibility with the fastener holes in Simpson Strong-Tie connectors. The hex head allows for a secure drive and helps avoid stripping of the head during installation. The sharp point of the screw enables fast starts.

Features:

- Tested and approved for use in many of our best-selling connectors for interior and most exterior applications.
- The single-fastener steel-side-plate load capacity of the SD9 exceeds the capacity of a 0.148" x 3" nail, while the single-fastener load capacity of the SD10 exceeds that of the 0.162" x 3½" nail.
- Ideal for use in tight spaces where using a hammer is inconvenient.
- Optimized heat-treating for ductility and strength.
- Mechanically galvanized coating meets ASTM B695 Class 55, is recommended for use with certain preservative-treated woods and recognized as an alternate to hot-dip galvanized in ESR-3046. It is compliant with the 2009, 2012, 2015, 2018 and 2021 International Residential Code® (Section R317.3.1).
- ¼" hex-drive bit included.
- Head identification.

Material: SD Screw — Heat-treated carbon steel, mechanically galvanized (ASTM B695 Class 55); SD SS Screw — Type 316 stainless steel

Codes: See p. 11 for Code Reference Key Chart

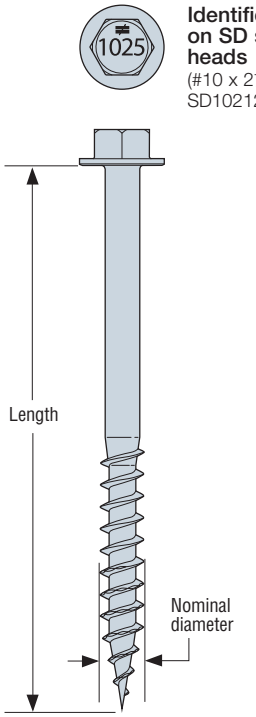

Identification on SD screw heads
(#10 x 2½" SD10212 shown)

Strong-Drive SD CONNECTOR Screw — SD10
(SD9 similar)

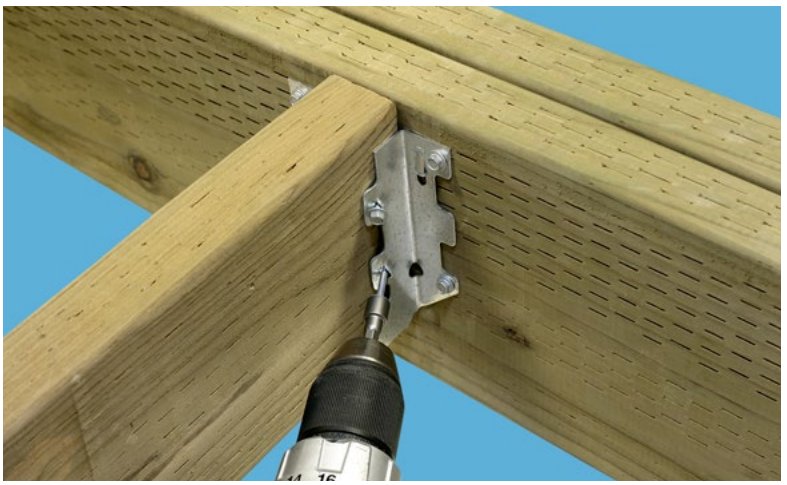

See pp. 350–352 for a list of connectors with the Strong-Drive SD Connector screw.

You can also reference the list of approved connectors, load values and applications at **strongtie.com/sd**, or reference the ICC-ES evaluation report ESR-3096 for a list of connectors and allowable loads using the Strong-Drive SD Connector screws.

C-C-2021 ©2021 SIMPSON STRONG-TIE COMPANY INC.

Strong-Drive® SD CONNECTOR and SD CONNECTOR SS Screws

Structural Fastener (cont.)

These products are available with additional corrosion protection. For more information, see p. 14.

SS For stainless-steel fasteners, see p. 21.

	Size	Coating Material	Retail Pack		Contractor Pack		Mini Bulk	
			Fasteners per Pack	Model No.	Fasteners per Pack	Model No.	Fasteners per Pack	Model No.
SS	#9 x 1½"	316 stainless steel	100	SD9112SS-R100	500	SD9112SS-R500	3000	SD9112SSMB
SS	#9 x 2½"	316 stainless steel	100	SD9212SS-R100	500	SD9212SS-R500	2000	SD9212SSMB
	#9 x 1½"	Mechanically galvanized	100	SD9112R100	500	SD9112R500	3000	SD9112MB
	#9 x 2½"	Mechanically galvanized	100	SD9212R100-R	500	SD9212R500	2000	SD9212MB
	#10 x 1½"	Mechanically galvanized	100	SD10112R100	500	SD10112R500	3000	SD10112MB
	#10 x 2½"	Mechanically galvanized	100	SD10212R100-R	500	SD10212R500	2000	SD10212MB

1. Mechanically-galvanized SD screws to be used with galvanized connectors.
2. Stainless-steel SD screws to be used with stainless-steel connectors.

	Model No.	Size (ga. x in.)	Thread Length (in.)	DF/SP Allowable Loads (lb.)		SPF/HF Allowable Loads (lb.)		Code Ref.
				Shear Steel Side Plate 20 ga. – 12 ga.	Withdrawal	Shear Steel Side Plate 20 ga. – 12 ga.	Withdrawal	
SS	SD9112/SD9112SS	#9 x 1½	1	171	173	112	122	IBC, FL, LA
SS	SD9212/SD9212SS	#9 x 2½	1	200		112		
	SD10112	#10 x 1½	1	173	173	138	122	
	SD10212	#10 x 2½	1	215		165		

1. Withdrawal loads and steel-side-plate shear loads are based on testing per ICC-ES AC233.
2. Allowable loads are shown at a wood load duration factor of C_D = 1.0. Loads may be increased for load duration per the building code up to a C_D = 1.6. Tabulated values must be multiplied by all applicable NDS adjustment factors.
3. Withdrawal loads are based on penetration of the screw's entire threaded section into the main member.
4. Visit **strongtie.com** for wood-to-wood shear values and wood side-plate details.

C-C-2021 ©2021 SIMPSON STRONG-TIE COMPANY INC.

Structural Fastener (cont.)

Connectors Approved for Use with the Strong-Drive SD Connector Screw. This is current as of this printing. We are constantly testing and updating this information. For the most updated information, see strongtie.com.

Model No.	SD9 Qty.		SD10 Qty.	
	1½"	2½"	1½"	2½"
A21	(4)	—	—	—
A23	(8)	—	—	—
A33	(8)	—	—	—
A34/A34SS	(8)	—	—	—
A35/A35SS	(12)	—	—	—
A44	(8)	—	—	—
ABA44Z	(6)	—	—	—
ABA44RZ	(6)	—	—	—
ABA46Z	—	—	(8)	—
ABA66Z	—	—	(8)	—
ABA66RZ	—	—	(8)	—
ABU44Z	—	—	(12)	—
ABU44SS[1]	(12)	—	—	—
ABU46Z	—	—	(12)	—
ABU46SS[1]	(12)	—	—	—
ABU66Z	—	—	(12)	—
ABU66SS[1]	(12)	—	—	—
ABU88Z	—	—	(18)	—
ABU88SS[1]	(18)	—	—	—
ABW44Z	(8)	—	—	—
ABW44RZ	(8)	—	—	—
ABW46Z	(10)	—	—	—
ABW46RZ	(10)	—	—	—
ABW66Z	(12)	—	—	—
ABW66RZ	(12)	—	—	—
AC4	—	—	(28)	—
AC4SS[1]	(28)	—	—	—
AC6	—	—	(28)	—
AC6SS[1]	(28)	—		—
BC4	—	—	(12)	—
BC4SS[1]	(12)	—	—	—
BC6		—	(12)	—
BC6SS[1]	(12)	—	—	—
BC40		—	(10)	—
BC40SS[1]	(10)	—	—	—
BC60	—	—	(10)	—
BC60SS[1]	(10)	—	—	—
BCS2-2/4	—	(14)	—	—
BCS2-2/4SS[1]	—	(14)	—	—
BCS2-3/6	—	(18)	—	—
BCS2-3/6SS[1]	—	(18)	—	—

Model No.	SD9 Qty.		SD10 Qty.	
	1½"	2½"	1½"	2½"
CS and CMST Straps	See p. 22 for straight strap fastener substitutions and reduction factors.			
CTS218	(24)	—	—	—
DJT14Z	—	—	—	(8)
DPT5Z	(5)	—	—	—
DPT7Z	(5)	—	—	—
DTT1Z	(6)	—	—	—
EPB44	—	—	(8)	—
EPB44PHDG	—	—	(8)	—
EPC4Z	(18)	—	—	—
EPC6Z	(18)	—	—	—
EPC8Z	(18)	—	—	—
FB24Z	(5)	—	—	—
FB24R	(5)	—	—	—
FB26	(6)	—	—	—
FBFZ	(4)	—	—	—
FBR24Z	(5)	—	—	—
FPBM44	(8)	—	—	—
FWH2	(16)	—	—	—
GA1	(4)	—	—	—
GA2	(6)	—	—	—
H1	(10)	—	—	—
H2A/H2ASS	(10)	—	—	—
H2.5A/H2.5ASS	(10)	—	—	—
H3/H3SS	(8)	—	—	—
H8/H8SS	(10)	—	—	—
H10A/H10ASS	(18)	—	—	—
H10A-2	(18)	—	—	—
HGUS and HHUS Hangers	See **strongtie.com** for Strong-Drive SD Connector screw substitutions and allowable loads.			
HHRC2-2	—	—	—	(62)
HHRC42-2	—	—	—	(62)
HHRC4/1.81	—	—	—	(62)
HHRC44	—	—	—	(62)
HHRC5.25/3.25	—	—	—	(62)
HHRC5.37/3.12	—	—	—	(62)
HHRC5.37/3.56	—	—	—	(62)
HHRC64	—	—	—	(67)
HHRC66	—	—	—	(67)
HPTZ	—	—	(8)	—
HRS6	(6)	—	—	—
HRS8	(10)	—	—	—

See footnotes on p. 352.

C-C-2021 ©2021 SIMPSON STRONG-TIE COMPANY INC.

Structural Fastener (cont.)

Connectors Approved for Use with the Strong-Drive SD Connector Screw. This is current as of this printing. We are constantly testing and updating this information. For the most updated information, see strongtie.com.

Model No.	SD9 Qty.		SD10 Qty.	
	1½"	2½"	1½"	2½"
HRS12	(14)	—	—	—
HTP37Z	(20)	—	—	—
HU Hangers	See p. 22 for face-mount hanger fastener substitutions and reduction factors.			
HSUR/L 45° Skewed Hangers	See **strongtie.com** for Strong-Drive SD Connector screw substitutions and allowable loads.			
HTT4	—	—	(18)	—
HTT5	—	—	(26)	—
HTU26	(31)	—	—	—
HTU26 (Min.)	(34)	—	—	—
HTU26 (Max.)	(40)	—	—	—
HTU28 (Min.)	(40)	—	—	—
HTU28 (Max.)	(52)	—	—	—
HTU210 (Min.)	(46)	—	—	—
HTU210 (Max.)	(64)	—	—	—
HTU26-2 (Min.)	(34)	—	—	—
HTU26-2 (Max.)	(40)	—	—	—
HTU28-2 (Min.)	(40)	—	—	—
HTU28-2 (Max.)	(52)	—	—	—
HTU210-2 (Min.)	(46)	—	—	—
HTU210-2 (Max.)	(64)	—	—	—
HUS26	—	—	—	(20)
HUS28	—	—	—	(30)
HUS210	—	—	—	(40)
HUS26-2	—	—	—	(8)
HUS28-2	—	—	—	(12)
HUS210-2	—	—	—	(16)
HUS212-2	—	—	—	(20)
HUS46	—	—	—	(8)
HUS48	—	—	—	(12)
HUS410	—	—	—	(16)
HUS412	—	—	—	(20)
HUS1.81/10	—	—	—	(40)
IUS Hangers	See p. 22 for face-mount hanger fastener substitutions and reduction factors.			
KBS1Z	(12)	—	—	—
L30	(4)	—	—	—
L50	(6)	—	—	—
L50SS	(6)	—	—	—
L70	(8)	—	—	—
L90	(10)	—	—	—
LCE4	—	—	(24)	—

Model No.	SD9 Qty.		SD10 Qty.	
	1½"	2½"	1½"	2½"
LCE4SS[1]	(24)	—	—	—
LPC4Z	(16)	—	—	—
LRU26Z	—	—	—	(9)
LRU28Z	—	—	—	(10)
LRU210Z	—	—	—	(13)
LRU212Z	—	—	—	(13)
LSCZ/LSCSS	(17)	—	—	—
LSTA9	(8)	—	—	—
LSTA12	(10)	—	—	—
LSTA15	(12)	—	—	—
LSTA18	(14)	—	—	—
LSTA21	(14)	—	—	—
LSTA24	(14)	—	—	—
LTS Twist Straps	LTS straps installed with SD #9 x 1½" screws will match allowable loads for installations with 0.148" x 3" nails.			
LSTA30	(14)	—	—	—
LSTA36	(14)	—	—	—
LSTI49	(16)	—	—	—
LSTI73	(16)	—	—	—
LTP4	(12)	—	—	—
LU Hangers	See p. 22 for face-mount hanger fastener substitutions and reduction factors.			
LU24 (10d)	(6)	—	—	—
LU26 (10d)	(10)	—	—	—
LU28 (10d)	(10)	—	—	—
LU210 (10d)	(16)	—	—	—
LUC26Z (10d)	(10)	—	—	—
LUC26SS (10d)	(10)			
LUC210Z (10d)	(16)	—	—	—
LUC210SS (10d)	(16)	—	—	—
LUS24	(4)	(2)	—	—
LUS26	(4)	(4)	—	—
LUS26SS	(4)	(4)	—	—
LUS28	(6)	(4)	—	—
LUS28SS	(6)	(4)	—	—
LUS210	(8)	(4)	—	—
LUS210SS	(8)	(4)	—	—
LUS36	(4)	(4)	—	—
LUS310	(6)	(4)	—	—
LUS24-2	(4)	(4)	—	—
LUS26-2	(4)	(4)	—	—
LUS28-2	(6)	(4)	—	—

See footnotes on p. 352.

C-C-2021 ©2021 SIMPSON STRONG-TIE COMPANY INC.

Strong-Drive® SD CONNECTOR and SD CONNECTOR SS Screws

Structural Fastener (cont.)

Connectors Approved for Use with the Strong-Drive SD Connector Screw. This is current as of this printing. We are constantly testing and updating this information. For the most updated information, see strongtie.com.

Model No.	SD9 Qty.		SD10 Qty.	
	1½"	2½"	1½"	2½"
LUS210-2	(8)	(6)	—	—
LUS214-2	(10)	(6)	—	—
LUS26-3	(4)	(4)	—	—
LUS28-3	(6)	(4)	—	—
LUS210-3	(8)	(6)	—	—
LUS44	(4)	(2)	—	—
LUS46	(4)	(4)	—	—
LUS48	(6)	(4)	—	—
LUS410	(8)	(6)	—	—
LUS414	(10)	(6)	—	—
LSU4.12	—	(40)	—	—
LSU4.28	—	(40)	—	—
LSU3510-2	—	(40)	—	—
LSU5.12	—	(40)	—	—
MIU Hangers	See p. 22 for face-mount hanger fastener substitutions and reduction factors.			
MST and MSTI Straps	See p. 22 for straight strap fastener substitutions and reduction factors.			
MSTA and MSTASS Straps	See p. 22 for straight strap fastener substitutions and reduction factors.			
MSTC Straps	See p. 22 for straight strap fastener substitutions and reduction factors.			
MSTI Straps	See p. 22 for straight strap fastener substitutions and reduction factors.			
MTS Twist Straps	MTS straps installed with SD #9 x 1½" screws will match allowable loads for installations with 0.148" x 3" nails.			
NS1	(2)	—	—	—
NS2	(2)	—	—	—
PA51	(10)	—	—	—
PA68	(10)	—	—	—
PBS44A	—	—	(14)	—
PC4Z	(18)	—	—	—
PC6Z	(18)	—	—	—
PC8Z	(18)	—	—	—
PBS44A	—	—	(14)	—
PF24	—	(6)	—	—
PF26	—	(4)	—	—
PSPN58Z	—	—	(4)	—
PSPN516Z	—	—	(12 to 24)	—
RR	(8)	—	—	—
RSP4	(8)	—	—	—
RTA12	(16)	—	—	—
RTA2Z	(8)	—	—	—

Model No.	SD9 Qty.		SD10 Qty.	
	1½"	2½"	1½"	2½"
RTA4	(12)	—	—	—
RTB22	(8)	—	—	—
RTC22Z	(11)	—	—	—
RTC2Z	(12)	—	—	—
RTC42	—	—	(22)	—
RTC44	—	—	(29)	—
RTF2Z	(13)	—	—	—
RTT22Z	(10)	—	—	—
SS1.5	(12)	—	—	—
SS2.5	(12)	—	—	—
SS3	(12)	—	—	—
SS4.5	(14)	—	—	—
ST9	—	—	(8)	—
ST12	—	—	(10)	—
ST18	—	—	(12)	—
ST22	—	—	(12)	—
ST292	—	—	(12)	—
ST2115	—	—	(6)	—
ST2122	—	—	(12)	—
ST2215	—	—	(14)	—
ST6215	—	—	(16)	—
ST6224	—	—	(20)	—
ST6236	—	—	(28)	—
SUR/L 45° Skewed Hangers	See **strongtie.com** for Strong-Drive SD Connector screw substitutions and allowable loads.			
THASR/L29	(7)	(12)	—	—
THASR/L29-2	—	(20)	—	—
THASR/L422	—	(20)	—	—
TJC57	(24)	—	—	—
TP and TPA Tie Plates	Not load rated. Use #9 x 1½" Strong-Drive SD Connector screw. Quantity as required.			
U Hangers	See p. 22 for face-mount hanger fastener substitutions and reduction factors.			
VTCR	(7)	—	—	—

1. Where indicated, published allowable loads are for installation with #10 SD Connector screws. Multiply allowable loads by 0.83 to obtain allowable loads for #9 SD Connector screws.
2. Stainless-steel connectors use #9 SD Connnector SS screws and have the same allowable loads as carbon steel #9 SD Connector screws.
3. Strong-Drive SD Connector screw substitutions may have load reductions. For additional information and specific allowable loads, refer to **strongtie.com/sd**.
4. **Fasteners:** SD screws are Simpson Strong-Tie® Strong-Drive SD Connector screws. See pp. 21–22 for fastener information.

C-C-2021 ©2021 SIMPSON STRONG-TIE COMPANY INC.

Titen Turbo™

Concrete and Masonry Screws

The new Titen Turbo concrete and masonry screw anchor features a patent-pending Torque Reduction Channel that displaces dust where it can't obstruct the thread action, reducing the likelihood of binding in the hole. The Titen Turbo is available in 3⁄16" and 1⁄4" diameter with either a hex head (required for use with connectors) or, for other material installations, a 6-lobe-drive countersunk head. The pointed tip allows for easy attachment of wood to concrete or for wood-to-wood applications. For more information, visit **go.strongtie.com/titenturbo**.

Material: Carbon steel

Coating: Zinc plated with baked-on ceramic coating

Codes: FL16230, IAPMO UES ER-712 (concrete), IAPMO UES ER-716 (masonry)

For proper installation sequence, see installation requirements in IAPMO UES ER-712 (Concrete) and ER-716 (Masonry).

Titen Turbo Screw Anchor Warning:

Industry studies show that hardened fasteners can experience performance problems in wet or corrosive environments. Accordingly, use this product in dry and noncorrosive environments only, or provide moisture barrier. Steps must be taken to prevent inadvertent sustained loads above the listed allowable loads. Overtightening and bending can initiate cracks detrimental to the hardened screw's performance. Use the Simpson Strong-Tie Titen Turbo installation tool kit (part TNTINSTALLKIT); it has a bit that is designed to reduce the potential for overtightening the screw.

Titen Turbo Hex-Head Screw
Patent Pending

Titen Turbo Hex Head

Titen Turbo 6-Lobe Head

Titen Turbo Allowable Loads in Normal-Weight Concrete (f'c = 2,500 psi)

Anchor Diameter (in.)	Drill Bit Diameter (in.)	Embedment Depth (in.)	Critical Edge Distance, C_{ac} (in.)	Minimum Edge Distance, C_{min} (in.)	Minimum Spacing (in.)	Static Allowable Loads		Wind Allowable Loads	
						Tension	Shear	Tension	Shear
3⁄16	5⁄32	1¾	3	1¾	1	460	205	385	170
				3		705	205	590	170
1⁄4	3⁄16	1¾	3	1¾	2	430	295	360	250
				3		705	310	590	260

1. Static allowable loads are calculated based on the strength design provision of ACI 318-14 Chapter 17 using a conversion factor of α = 1.4. The conversion factor α is based on the load combination 1.2D + 1.6L assuming 50% dead load and 50% live load: 1.2(0.5) + 1.6(0.5) = 1.4.
2. Wind allowable loads are calculated based on the strength design provision of ACI 318-14 Chapter 17 using a conversion factor of α = 1/0.6 = 1.67. The conversion factor α is based on the load combination assuming 100% wind load.
3. Tabulated values are calculated with C_{min} on one side and C_{ac} on three sides.
4. Tabulated values are for a single anchor with no influence of another anchor.

Titen Turbo Allowable Loads in CMU

Anchor Diameter (in.)	Drill Bit Diameter (in.)	Embedment Depth (in.)	Minimum Edge Distance (in.)	End Distance (in.)	Minimum Spacing (in.)	Allowable Load ($f'_m \geq$ 1,500 psi) (lb.)			
						Ungrouted CMU		GFCMU	
						Tension	Shear	Tension	Shear
3⁄16	5⁄32	1¼	3⅞	3⅞	3	117	164	—	—
		2	3⅞			—	—	267	218
		2	1½			—	—	267	218
1⁄4	3⁄16	1¼	3⅞	3⅞	4	117	190	—	—
		2	3⅞			—	—	393	342
		2	1½			—	—	343	283

1. The allowable loads listed are based on a safety factory of 5.0 for CMU.
2. Allowable loads may not be increased for the duration of the load.
3. The attached member or element may govern the allowable load. The designer shall verify allowable load.
4. Refer to **strongtie.com** for additional information on the Titen Turbo.

C-C-2021 ©2021 SIMPSON STRONG-TIE COMPANY INC.

Titen HD® Heavy-Duty Screw Anchor

A high-strength screw anchor for use in cracked and uncracked concrete, as well as uncracked masonry. The Titen HD offers low installation torque and outstanding performance. Designed for use in dry, interior, non-corrosive environments or temporary outdoor applications.

Features

- Qualified for static and seismic loading conditions
- Thread design undercuts to efficiently transfer the load to the base material
- Standard fractional sizes
- Specialized heat-treating process creates tip hardness for better cutting without compromising the ductility
- No special drill bit required — designed to install using standard-sized ANSI tolerance drill bits
- Hex-washer head requires no separate washer, unless required by code, and provides a clean installed appearance

Codes: ICC-ES ESR-2713 (concrete);
ICC-ES ESR-1056 (masonry);
City of LA Supplement within ESR-2713 (concrete);
City of LA Supplement within ESR-1056 (masonry);
Florida FL15730 (concrete and masonry);
FM 3017082, 3035761 and 3043442;
Multiple DOT listings

Material: Carbon steel

Coating: Zinc plated or mechanically galvanized.
Not recommended for permanent exterior use or highly corrosive environments.

Titen HD Hex-Washer Head

Serrated teeth on the tip of the Titen HD screw anchor facilitate cutting and reduce installation torque.

Titen HD Screw Anchor

Stainless-Steel Titen HD Heavy-Duty Screw Anchor

The Next Era of Stainless-Steel Screw Anchor for Concrete and Masonry

Titen HD screw anchors are a trusted anchor solution because they offer the performance that specifiers need and the ease of installation that contractors demand. Until now, however, they were not for use in permanent exterior or corrosive environments. The Titen HD stainless-steel screw anchor for concrete and masonry sets the new standard for when the job calls for installation in multiple types of environments. It is the ultimate choice to provide fast and efficient installation, combined with long-lasting corrosion resistance for an unsurpassed peace-of-mind.

Features:

- Ideal for exterior or corrosive environments
- Anchor contains minimal carbon steel resulting in less expansion forces in the concrete due to corrosion

Codes: IAPMO UES ER-493 (concrete);
ICC-ES ESR-1056 (masonry);
City of LA Supplement within ER-493 (concrete);
City of LA Supplement within ESR-1056 (masonry);
Florida FL15730 (masonry); FL16230 (concrete)

Material: Type 316 and Type 304 stainless steel with carbon-steel lead threads

Innovative Carbon-Steel Lead Threads

Stainless-Steel Titen HD Hex-Washer Head Style Screw Anchor

US Patents 8,747,042 B2 and 9,517,519

Additional Installation Information for Titen HD and Stainless-Steel Titen HD

Titen HD® Diameter (in.)	Wrench Size (in.)	Recommended Steel Fixture Hole Size (in.)	Minimum Hole Depth Overdrill (in.)
¼	⅜	⅜ to 7⁄16	⅛
⅜	9⁄16	½ to 9⁄16	¼
½	¾	⅝ to 11⁄16	½
⅝	15⁄16	¾ to 13⁄16	½
¾	1 ⅛	⅞ to 15⁄16	½

Suggested fixture hole sizes are for structural steel thicker than 12 gauge only.
Larger holes are not required for wood or thinner cold-formed steel members.

C-C-2021 ©2021 SIMPSON STRONG-TIE COMPANY INC.

Simpson Strong-Tie Limited Warranty

Effective Date: March 18, 2021

This Limited Warranty applies to all Simpson Strong-Tie products ("Products") purchased after the Effective Date while this Limited Warranty remains in effect, other than those Simpson Strong-Tie products that have a separate Limited Warranty applicable to such products. For purchases after the Effective Date, please consult strongtie.com/limited-warranties, as this Limited Warranty may be updated by Simpson from time to time. All future purchases of Products are subject to the terms of the Limited Warranty in effect as of the purchase date.

This Limited Warranty must be read in conjunction with all applicable General Notes, General Instructions for the Installer, General Instructions for the Designer, Building Codes, Corrosion Information, and Terms & Conditions of Sale, along with any other information or specifications published by Simpson Strong-Tie Company Inc. ("Simpson") or available on the strongtie.com website ("Website") or on the product package, label or product manual. All of this information is referred to collectively as the "Simpson Strong-Tie Documentation." All applicable Simpson Documentation must be carefully reviewed each time any Product is used.

Simpson Strong-Tie warrants, to the original purchaser only, that each Product will be free from substantial defects in materials, manufacturing and design if properly specified, installed, and maintained, and when used in accordance with the design limits and the structural, technical, and environmental specifications in the Simpson Strong-Tie Documentation. This Limited Warranty is void and does not apply to any (a) Product purchased from an unauthorized dealer, retailer or distributor, (b) Product deterioration or damage due to environmental conditions or inadequate or improper handling, transportation, storage or maintenance, (c) cosmetic defects, including discoloration, (d) failure or damage caused by improper installation, application, mixing or preparation, (e) use of a Product in temperatures or environmental conditions outside the ranges specified for such Product in the Simpson Strong-Tie Documentation, (f) use of a Product outside of its shelf-life specifications, (g) normal wear and tear, (h) failure or damage caused by the use of a Product with any fasteners, pins, screwstrips, products or accessories other than authentic Simpson Strong-Tie products, (i) Product that was subjected to negligence or excessive or improper use, including any use not in accordance with the Simpson Strong-Tie Documentation, (j) failure or damage caused by the building site, foundation, or any third-party products, building materials or components, (k) failure or damage caused by use of a Product in a structure that has a design or other defect or that does not comply with all applicable building codes, laws, rules and regulations, (l) modified Product, or any nonstandard use or application of a Product, (m) failure or damage caused by corrosion, termites or other wood destroying organisms, animal or insect activity, wood fungal decay, rot, mold, mildew, exposure to chemicals or other hazardous substances, a corrosive environment or materials, inadequate moisture protection, or premature deterioration of building materials, (n) failure or damage caused by an act of God, including any hurricane, earthquake, tornado, lightning, ice, snow, high wind, flood or other severe weather or natural phenomena, (o) installation services or workmanship, including any failure or damage caused by installation of any Product, whether or not in accordance with the Simpson Strong-Tie Documentation, or (p) failure or damage caused by the gross negligence, willful misconduct, or other acts or omissions of the builder, general contractor, installer or any third party, including the building owner. Notwithstanding the foregoing, Simpson Strong-Tie disclaims and does not provide any warranty related to the design of any custom-order or non-catalog Product.

Although Products are designed for a wide variety of uses, Simpson Strong-Tie assumes no liability for confirming that any Product is appropriate for an intended use, and each intended use of a Product must be reviewed and approved by qualified professionals. Each Product is designed for the load capacities and uses listed in the Simpson Strong-Tie Documentation, subject to the limitations and other information set forth in the Simpson Strong-Tie Documentation.

Due to the particular characteristics of potential impact events such as earthquakes and high velocity winds, the specific design and location of the structure, the building materials used, the quality of construction, or the condition of the soils or substrates involved, damage may nonetheless result to a structure and its contents even if the loads resulting from the impact event do not exceed Simpson Strong-Tie's specifications and the Products are properly installed in accordance with applicable building codes, laws, rules and regulations.

Product demonstrations, training, operator examinations, technical and customer support and other services provided by Simpson Strong-Tie are based on Simpson Strong-Tie's present knowledge and experience, are conducted for illustrative or instructive purposes only, do not constitute a warranty of Product capabilities, specifications or installation and do not modify the applicable Limited Warranty for Products set forth herein. Any services provided by Simpson Strong-Tie are provided without any representation or warranty of any kind, and Simpson Strong-Tie assumes no liability for any representations or statements made as part of such Product demonstrations, training, operator examinations or other services. In the event of any inconsistency between any information provided during any such demonstration or service, and the information in any applicable Simpson Strong-Tie Documentation, the information in the Simpson Strong-Tie Documentation shall govern. In the event of any inconsistency between any information provided on the Website, and the information in any other Simpson Strong-Tie Documentation, the information on the Website shall govern.

ALL WARRANTY OBLIGATIONS OF SIMPSON STRONG-TIE SHALL BE LIMITED, AT SIMPSON STRONG-TIE'S ABSOLUTE DISCRETION, TO EITHER REPAIRING THE DEFECTIVE PRODUCT OR PROVIDING A REPLACEMENT FOR THE DEFECTIVE PRODUCT. THIS REMEDY CONSTITUTES SIMPSON STRONG-TIE'S SOLE OBLIGATION AND LIABILITY AND THE SOLE AND EXCLUSIVE REMEDY OF PURCHASER AND, WITHOUT LIMITING THE GENERALITY OF THE FOREGOING, EXCLUDES ANY LABOR OR OTHER COSTS INCURRED IN CONNECTION WITH A WARRANTY CLAIM. PURCHASER ASSUMES ALL RISK AND LIABILITY ASSOCIATED WITH ANY USE OF THE PRODUCT, INCLUDING BUT NOT LIMITED TO SUITABILITY FOR ITS INTENDED USE.

THE LIMITED WARRANTY HEREIN IS EXPRESSLY IN LIEU OF ALL OTHER WARRANTIES, AND, WHERE LAWFUL, SIMPSON STRONG-TIE DISCLAIMS ALL OTHER WARRANTIES, INCLUDING BUT NOT LIMITED TO IMPLIED WARRANTIES OF MERCHANTABILITY AND FITNESS FOR A PARTICULAR PURPOSE AND WARRANTIES ARISING FROM COURSE OF PERFORMANCE, COURSE OF DEALING OR TRADE USAGE. IN NO EVENT WILL SIMPSON STRONG-TIE BE LIABLE FOR INCIDENTAL, CONSEQUENTIAL, PUNITIVE OR SPECIAL DAMAGES OR DIRECT OR INDIRECT LOSS OF ANY KIND, INCLUDING BUT NOT LIMITED TO PROPERTY DAMAGE, DEATH AND PERSONAL INJURY. SIMPSON STRONG-TIE'S ENTIRE LIABILITY IS LIMITED TO THE PURCHASE PRICE OF THE DEFECTIVE PRODUCT. SOME STATES DO NOT ALLOW LIMITATIONS ON HOW LONG AN IMPLIED WARRANTY LASTS, OR THE EXCLUSION OR LIMITATION OF INCIDENTAL OR CONSEQUENTIAL DAMAGES, SO THE ABOVE LIMITATION OR EXCLUSION MAY NOT APPLY TO YOU. THIS WARRANTY GIVES YOU SPECIFIC LEGAL RIGHTS, AND YOU MAY ALSO HAVE OTHER RIGHTS WHICH VARY FROM STATE TO STATE.

To obtain warranty service, you must contact Simpson Strong-Tie promptly at (800) 999-5099 or at Simpson Strong-Tie Company Inc., 5956 West Las Positas Boulevard, Pleasanton, CA 94588, regarding any potential claim, no later than sixty (60) days after you discover the potential claim. Upon request by Simpson Strong-Tie, you must provide Simpson Strong-Tie with: (a) proof of purchase and written records evidencing, in reasonable detail, the date and manner of installation, application, mixing and preparation of the Products, as applicable, (b) a reasonable opportunity to inspect the site where the Product was installed, and (c) samples of the Products from the actual installation in sufficient quantities in order for Simpson Strong-Tie to perform testing to determine whether or not the Product failed as set forth herein. Simpson Strong-Tie may, in its absolute discretion, request that you return the allegedly defective Products to Simpson Strong-Tie, in which case Simpson Strong-Tie will issue a Return Materials Authorization (RMA), which must be completed and returned to Simpson Strong-Tie with the Product. Simpson Strong-Tie is not responsible for any costs or expenses incurred in connection with any inspection (other than by Simpson Strong-Tie employees) or in connection with the return of Products to Simpson Strong-Tie, but Simpson Strong-Tie shall bear all costs and expenses incurred in connection with the shipment of replacement Products in the event that Simpson Strong-Tie determines that the Product should be replaced in accordance with this Limited Warranty. If Simpson Strong-Tie elects to repair or replace the Product, Simpson Strong-Tie shall have a reasonable time to do so.

No one is authorized to change or add to this Limited Warranty. If at any time Simpson Strong-Tie does not enforce any of the terms, conditions or limitations stated in this Limited Warranty, Simpson Strong-Tie shall not have waived the benefit of said term, condition or limitation and can enforce it at any time. This Limited Warranty is extended only to the original purchaser and is not transferrable. It is not intended nor shall it be construed to create rights in any third party.

C-C-2021 ©2021 SIMPSON STRONG-TIE COMPANY INC.

Simpson Strong-Tie® Specification Tools

Web applications to help you work faster and more efficiently.

CS Connector Selector™

DPS Deck Planner Software™

PPS Pergola Planner Software

AD Anchor Designer™

PFD Post-to-Foundation Designer

SDDC

REC

FD

SASC Slope and Skew Calculator

ACE Adhesive Cartridge Estimator

FF Fastener Finder

JHS Joist Hanger Selector

SWSS Strong-Wall® Shearwall Selector

SFS Strong Frame® Moment Frame Selector

PSG Product Submittal Generator

SBSD Site-Built Shearwall Designer

CSC Coiled Strap Calculator

SWBS Strong-Wall® Bracing Selector

APP Simpson Strong-Tie® Applications

WBLC Wall-Bracing Length Calculator

WSC Wood Shrinkage Calculator

WST Weak-Story Tool

DF Drawing Finder

CRF Code Report Finder

Simplify and streamline any job, with our broad range of complimentary software and web application technology solutions. Whether you're an architect, engineer or builder, our tools offer innovative, cost-effective product and design recommendations to meet your project needs. Make your next job stronger, easier and more economical with Simpson Strong-Tie Specification Tools. Visit **go.strongtie.com/software** or call (800) 999-5099 for more.

C-C-2021 Effective 7/1/2021 Expires 12/31/2023

© 2021 Simpson Strong-Tie Company Inc.