BALDWIN®

ESTATE™

PRICE BOOK APRIL 2020

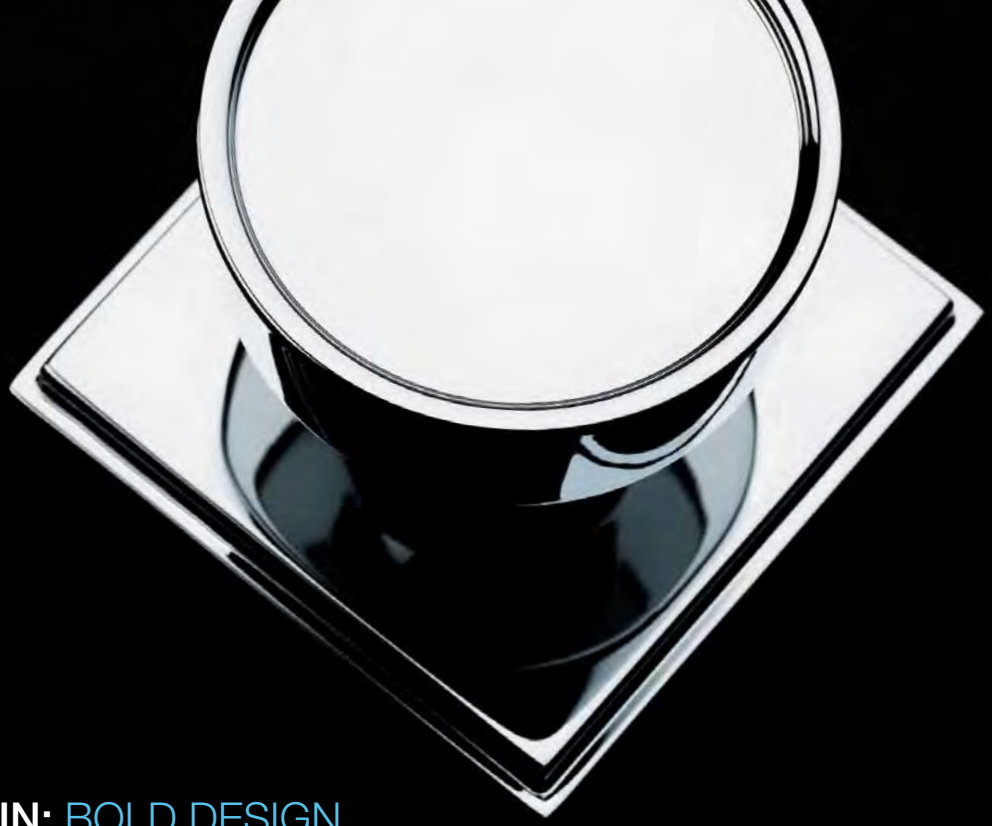

BALDWIN: BOLD DESIGN

Baldwin Hardware has been a timeless and trusted brand for 70 years. It boasts both style and substance and creates a charismatic presence in any home. Through generations, Baldwin's passionate pursuit of perfection has forged us into masters of our craft, so that today, you have the power to make a bold style statement without even saying a word. Create your signature look and show the world what true luxury is about with Baldwin.

Estate
When people say it's lonely at the top, they're definitely not talking about Baldwin Estate. Estate includes seemingly infinite possibilities, elegant finishes and exclusive, custom styles. Our master craftsmen create each piece by hand and with the utmost care: It's no surprise Estate is the crowned jewel of the Baldwin brand. It feels custom made, because it is. No matter the design aesthetic, Estate has options so beautiful, tasteful, well made, and inviting, it's no surprise this top-of-the-line portfolio comes with plenty of company—everyone wants Baldwin Estate.

Reserve
The Reserve portfolio is for people who want more. They're looking for more ways to express themselves with the distinctive look of Baldwin, and they find value in a company with 70 years of experience and a proven commitment to greater quality. Far beyond just a lock in a box, Reserve opens the door to a customizable world flowing with inspiration. And it's all ready to go whenever inspiration strikes, because it's ready to ship in just 7 days. Reserve is the best of both worlds: accessibility and artful appeal. Make a lasting impression with Reserve.

Prestige Series
Prestige Series provides our customers with affordable luxury. It is our most accessible collection available in retail stores across the nation and a way to bring the legendary excellence of Baldwin into more homes and more hands. With the Prestige Series, first-time homeowners instantly create an atmosphere of confidence from the moment someone knocks on their door.

With three distinctly Baldwin portfolios—premium Prestige Series, handcrafted Reserve and our solid brass, crown jewel, Estate—there's a way for everyone to own the best of Baldwin.

ESTATE FINISHES

TIER 1

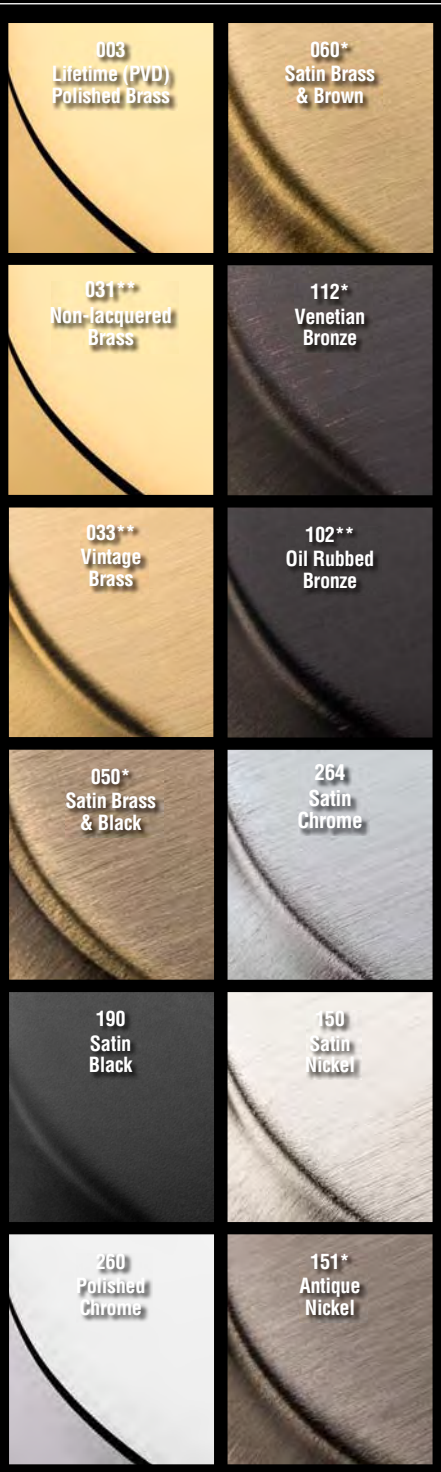

TIER 1

TIER 2

TIER 2

DISTRESSED FINISHES:

Not all hardware is available Distressed.
The rugged tumbling process would damage some components.
In cases where distressing is not possible,
the equivalent non-distressed finish will be provided.

402 = 102

452 = 152 Antique Nickel with Matte laqcuer (151 has gloss laqcuer)

Hardware NOT available distressed includes:

> All mortise locks, cylinders, latches, strikes

> Certain levers & handleset trim
(noted on those pages)

*HAND-RELIEVED FINISH VARIANCES:

(050, 060, 112, 151, 452)

Product finishes which are HAND RELIEVED may vary in luster, hue and appearance as a result of handcrafted variances in the final finishing step.

**LIVING FINISH

(031, 033, 102, 402)

Product finishes which are LIVING will vary over time. They are not eligible for finish warranty.

Baldwin #	US #	BHMA #
031 =	3NL	–
044 =	4	606
050 =	5	609
060 =	6	608
102 =	10B	613
150 =	15	619
190 =	19	622
260 =	26	625
264 =	26D	626

*Note: For select products, 030 Polished Brass or 140 Polished Nickel will be offered as a substitute when we cannot offer the 003 or 055 PVD version.

BALDWIN®
ESTATE™

PRICE BOOK
APRIL 2020

ORDERING & SHIPPING LEAD-TIMES

BALDWIN QUICKSHIP PROGRAM

Quick Ship is designed to expedite shipping of the most popular styles, designs and finishes to customers. Nearly 1600 SKUs are available through Baldwin QuickShip and customers will be delighted to know their order will be processed and shipped within 3 business days (normal leadtimes if specialty keying is required), from order confirmation. Quick Ship program is available in limited functions and finishes. For complete listings, please refer to page 272.

BALDWIN ESTATE, GENERAL HARDWARE & CABINET HARDWARE.

Unless otherwise communicated, all products in these categories will ship from the Baldwin distribution center within 4 weeks from date of order entry. Need something quicker? Our Quick Ship program will ship within 3 days from date of order entry.

BALDWIN MULTI-POINT TRIMS

Unless otherwise communicated, all products in this category will ship from the Baldwin distribution center within 5 weeks from date of order entry.

BALDWIN KEYLESS ENTRY

All products in this category will ship from the Baldwin distribution center within 4 weeks from date of order entry.

FREIGHT AND EXPEDITED FREIGHT:

Orders receive freight prepaid by Baldwin. Baldwin will utilize standard ground transportation unless otherwise indicated. In addition to ground freight Baldwin offers 3 types of expedited freight at the customer's cost. Next Day, Two Day & 3 Day. To request expedited freight just indicate which of the 3 options you prefer.

HOW DO I REQUEST SAME DAY SHIPMENTS?

To receive same day shipment on any of your orders please verify that the items are in stock. This can be done by checking Baldwin Express or calling Baldwin Customer Service. If the item is available, contact Baldwin Customer Service to make us aware that your order is being sent and that it needs to be shipped that day. Orders must be received by Baldwin prior to 10:30 a.m. EST and should be sent to the attention of the Customer Service Representative that you notified. Please note "ship today" on the order and if you want to use expedited freight. i.e. – Next day, Two day, etc.

MINIMUM ORDER SIZE:

Due to cost of order processing and fulfillment, the minimum dollar amount for an order placed directly with Baldwin Customer Service is $250. For orders less than $250 net, customers may either place the order through Baldwin Express, increase the size of the order to at least $250, or purchase the items through Baldwin's wholesale distribution partners.

TABLE OF CONTENTS

How To Order & Installation
Essentials 4
Part Numbers & Process 5
How to Order & Installation Examples 6

Pre-configured Knob & Lever Sets
Knobs 13
Levers 14
Tubular Keyed Knobs 15
Tubular Keyed Levers 17

A La Carte Knobs & Levers
Knobs 21
Levers 28
Rosettes 38
Latches 50
Interior Knob & Lever UL Kits 50
Strikes 52
Spindles 53
Mortise Bolts 55
Turn Piece 56
Turn Knobs 57
ER Trim 58
Spare Parts & Installation Tools 59
Communicating Door Kits 61

Tubular Handlesets
Specification 63
Entrance Sets 65

Evolved Smart Locksets
Specifications 83
Handlesets 84
Deadbolts & Sectional Kits 94

Touchscreen Deadbolts & Handlesets
Specification 97
Deadbolts & Handlesets 98

Mortise Lock Trims, Locks, & Cylinders
Specifications 105, 142, 158
Trims 107
Thick door kits 140
Entrance Functions Locks 144
Grade 1 Locks 146
Interior Functions Locks 148
Deadlocks 150
Electrified Locks 151
Strikes 152
Armored Fronts 153
Lock Trim Thickness Index 154
Cylinders - C Keyway Table 155
Cylinder Accessories 156
Cylinder Trim 157
Key Blanks 160
Replacement Parts 161
Tools & Accessories 163

Screen Door Locks
Sets 165
Knobs/Levers 166

Sliding Door Locks
Pocket Doors 171

Multi-Point
How to Order 177
Configurations 181

Rim Locks and Cremone Bolts
Standards & Specifications 201
Passage, Privacy, and Entrance 202
Special Functions 203
Trim & Accessories 204
Cremone Bolts 206

Keypad Entry
Introduction & Specifications 209

Deadbolts
Specifications 213
UL Kits 219
Deadbolt Accessories 220

General Hardware
Letter Box Plates 223
Door Knockers 224
Bell Buttons 225
Door Guards & Surface Bolts 227
Flush Rings & Edge Pulls 229
Casement Fasteners 231
Costume Hooks 232
Flush Bolts & Strikes 233
Kick Plates 234
Push Plates and Pulls 235
Door Stops 239
Mortise Hinges 241
Switchplates 246
Cabinet Hardware 248
Appliance Pulls 257

Index
Numerical 260
Alphabetical 268
Quick Ship Listing 272

ALPHABETICAL INDEX

		PAGE
85365	Ashton®	65
6570	Atlanta	107
6552	Baltimore	108
6554	Barclay	109
85327	Bethpage® Sectional	65
85337	Bethpage®	66
M522	Bethpage® ¾ (Mortise)	110
85337	Bethpage® (Evolved)	84
6942	Bismark	111
85360	Blakely	66
85360	Blakely (Evolved)	84
85354	Boulder ¾	67
85354	Boulder ¾ (Evolved)	85
85353	Boulder Sectional (Evolved)	85
85358	Boulder Sectional (Touchscreen)	100
M512	Boulder ¾ (Mortise)	112
6402	Boulder	67
6402	Boulder (Evolved)	86
M514	Boulder (Mortise)	113
6420	Bristol (Tubular)	68
6963	Bristol	114
85305	Canterbury	68
85305	Canterbury Sectional (Evolved)	86
85306	Canterbury Sectional (Touchscreen)	100
85352	Cody® ¾	69
85352	Cody® ¾ (Evolved)	87
M502	Cody® ¾ (Mortise)	115
6403	Cody®	69
6403	Cody® (Evolved)	87
M504	Cody® (Mortise)	116
6571	Concord	117
6401	Devonshire™	70
6401	Devonshire™ (Evolved)	88
6952	Edinburgh	118
	Fenwick®	118
	Georgetown™	139
6544	Hamilton	119
85311	Hollywood Hills (Evolved)	88
6945	Hollywood Hills (Mortise) Knob x Knob	121
6945	Hollywood Hills (Mortise)	120
85310	Hollywood Hills Sectional	71
85311	Hollywood Hills	71
6973	Houston	122
6950	Kensington	124
6426	Kensington (Evolved)	89
6526	Kensington ¾	123
6426	Kensington (Tubular)	72
6966	Lakeshore™	125
6974	Lakeshore™ Lever	125
85345	Landon®	72
6560	Lexington	126
85315	Logan	73
85335	Logan	73
85320	Madison	74
85350	Manchester	74
85350	Manchester (Evolved)	89
6976	Minneapolis (Mortize)	127
85392	Minneapolis (Evolved)	91
85390	Minneapolis Sectional (Tubular)	75
85391	Minneapolis ¾ (Tubular)	75
85392	Minneapolis (Tubular)	76
85390	Minneapolis Sectional (Evolved)	90
85393	Minneapolis Sectional (Touchscreen)	101
85391	Minneapolis ¾ (Evolved)	90
6547	Nashville	128
85391	Palm Springs™ ¾	77
85396	Palm Springs™ ¾ (Evolved)	91
6920	Palm Springs™ ¾ (Mortise)	129
85390	Palm Springs™	76
85397	Palm Springs™ (Evolved)	92
6921	Palm Springs™ (Mortise)	130
6944	Pasadena	131
	Reading	137
6999	Richland®	132
6915	Santa Monica	133
85386	Soho®	78
85387	Soho® ¾	78
M516	Soho® ¾ (Mortise)	134
85387	Soho® ¾ (Evolved)	92
85385	Soho® Two-Point	79
6573	Springfield	135
	Stanford™	119
85355	Stonegate	79
85355	Stonegate (Evolved)	93
6542	Tremont	136
6567	Trenton	137
	Versailles	138
6948	Victoria™	138
	Westminster	124
6549	Williamsburg	139
	Wilmington	126

NUMERICAL INDEX

		PAGE
6401	Devonshire™	70
6401	Devonshire™ (Evolved)	88
6402	Boulder	67
6402	Boulder (Evolved)	86
6403	Cody®	69
6403	Cody® (Evolved)	87
6420	Bristol (Tubular)	68
6426	Kensington (Tubular)	72
6426	Kensington (Evolved)	89
6502		51
6505		139
6506		122
6508		137
6513		107
6514		127
6526	Kensington ¾	123
6542	Tremont	136
6544	Hamilton	119
6547	Nashville	128
6549	Williamsburg	139
6552	Baltimore	108
6553		125
6554	Barclay	109
6560	Lexington	126
6567	Trenton	137
6570	Atlanta	107
6571	Concord	117
6573	Springfield	135
6602		137
6604		117
6605		136
6619		107
6621		126
6622		119
6624		124
6628		135
6641		131
6643		123
6690		132
6709		132
6714		131
6767		108
6789		118
6790		124
6791		119
6793		128
6794		117
6795		126
6796		136
6798		135
6915	Santa Monica	133
6920	Palm Springs™ ¾ (Mortise)	129
6921	Palm Springs™ (Mortise)	130
6942	Bismark	111
6944	Pasadena	131
6945	Hollywood Hills (Mortise)	120
6945	Hollywood Hills (Mortise) Knob x Knob	121
6948	Victoria™	138
6950	Kensington	124
6952	Edinburgh	118
6956		138
6963	Bristol	114
6966	Lakeshore™	125
6973	Houston	122
6974	Lakeshore™ Lever	125
6976	Minneapolis	127
6986		111
6991		109
6993		138
6999	Richland®	132
85305	Canterbury	68
85305	Canterbury (Evolved)	86
85306	Canterbury Sectional (Touchscreen)	100
85310	Hollywood Hills Sectional	71
85311	Hollywood Hills (Evolved)	88
85311	Hollywood Hills	71
85315	Logan	73
85320	Madison	74
85327	Bethpage® Sectional	65
85335	Logan	73
85337	Bethpage®	66
85337	Bethpage® (Evolved)	84
85345	Landon®	72
85350	Manchester	74
85350	Manchester (Evolved)	89
85352	Cody® ¾	69
85352	Cody® ¾ (Evolved)	87
85353	Boulder (Evolved)	86
85354	Boulder ¾	67
85354	Boulder ¾ (Evolved)	85
85355	Stonegate	79
85355	Stonegate (Evolved)	93
85358	Boulder Sectional (Touchscreen)	100
85360	Blakely	66
85360	Blakely (Evolved)	84
85365	Ashton®	65
85385	Soho® Two-Point	79
85386	Soho®	78
85387	Soho® ¾	78
85387	Soho® ¾ (Evolved)	92
85390	Palm Springs™	76
85390	Palm Springs™ (Evolved)	92
85391	Palm Springs™ ¾	77
85392	Minneapolis (Evolved)	91
85393	Minneapolis Sectional (Touchscreen)	101
85396	Palm Springs™ ¾ (Evolved)	91
85397	Palm Springs™ (Evolved)	92
M502	Cody® ¾ (Mortise)	115
M504	Cody® (Mortise)	116
M512	Boulder ¾ (Mortise)	112
M514	Boulder (Mortise)	113
M516	Soho® (Mortise)	134
M522	Bethpage® (Mortise)	110

ESSENTIALS

Lock Types:

1) Mortise

2) Tubular

Door Types:

> Wood, Fiberglass & Hollow Metal
> Hollow Fiberglass & Metal doors do NOT allow for any mortise lock installation

DOOR THICKNESS & STILE

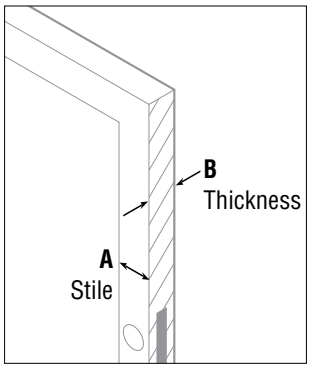

Door Prep:

> 1) Pre-drilled for Mortise
  2) Pre-drilled for 2.125″ bore hole Tubular
  3) Un-prepped (blank door) – ideal for tubular latch or mortise installations
  (Estate Passage – 0.625″ hole for spindle; Estate Privacy – prep varies, see Installation Instructions)
> Adaptors can retrofit most Estate Tubular hardware to 2.125″ bored doors, but only large rosettes cover bore hole
> Tubular locks CANNOT be used on Mortise-prepped doors
> Mortise locks can rarely be used on 2.125″ bore Tubular-prepped doors

Door Thickness:

> Industry Standards – 1.75″ (Exteriors) & 1.375″ (Interiors)
> Doors ≥ 2.50″ Thick limits hardware options – Contact Customer Service
> Exterior Doors < 1.75″ Thick limits hardware options
> Escutcheon thickness determines cylinder & spindle lengths needed (see Inside Back Cover)

DOOR BACKSET

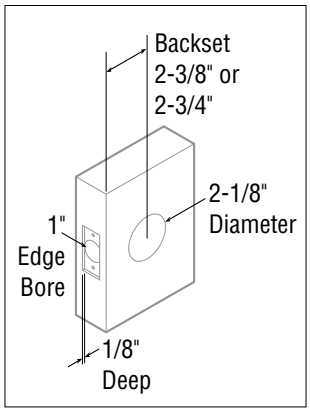

Door Stile Width:

> Narrow Stiles (4″ or less) limit backset & escutcheon trim options
> 3″ or less Stile severely limits Mortise Lock, Function & Escutcheon options

Door Backset:

Measurement from edge of door (where it latches) to centerline of lock or doorknob

Door Handing:

> Certain Lock Types require correct handing (Exterior Levers, Mortise Boxes, Half Dummy Levers)
> HAND OF DOOR ALWAYS DETERMINED FROM OUTSIDE

DOOR HANDING

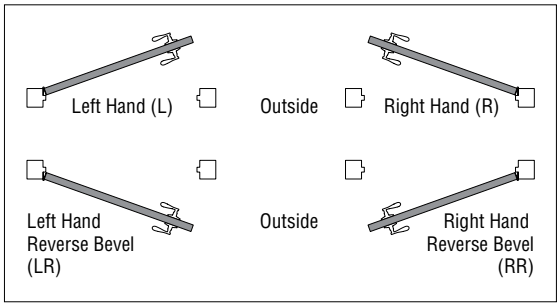

A few rules to follow:

> The outside of an exterior door is the street or entrance side
> The outside of a room door is the hall side
> The outside of a single communicating door is the side from which the hinges are not visible when the door is closed
> The outside of a closet door is the room or hall side

Right Handed:	hinges on RIGHT – door swings IN
Left Handed:	hinges on LEFT – door swings IN
Right Hand Reverse Bevel:	hinges on RIGHT – door swings OUT
Left Hand Reverse Bevel:	hinges on LEFT – door swings OUT

PART NUMBERS & PROCESS

BALDWIN PART NUMBERS ARE MADE UP OF THREE PARTS SEPARATED BY PERIODS:

1) Product Number communicates Style

2) 3-digit Finish

3) Suffix communicates Function/Configuration

XXXX.	XXX.	XXXX
Product Number	Finish	Function & Configuration

SUFFIXES

KNOBS & LEVERS:

Function Code	Description
.MR	Pair of Knobs or Levers, Minus Rose
.IMR	One Knob, Minus Rose
.RMR	One Right Lever, Minus Rose
.LMR	One Left Lever, Minus Rose
.PASS	One Preconfigured Passage Set
.PRIV	One Preconfigured Privacy Set
.FD	One Preconfigured Full Dummy Set
.IDM	One Preconfigured Half Dummy Knob Set
.RDM	One Preconfigured Right Hand Half Dummy Lever Set
.LDM	One Preconfigured Left Hand Half Dummy Lever Set

LATCHES:

Function Code	Description
No suffix	Passage Latch
.P	Privacy Latch

ROSETTES:

Function Code	Description
No Suffix	Pair, Active
.FD	Pair, Dummy
.I	Half Pair, Active
.IDM	Half Pair, Dummy
.PS	Pair, Passage Active
.PV	Pair, Privacy Active
.IPS	Half Pair, Passage Active
.IPV	Half Pair, Privacy Active

ORDERING ESTATE KNOBS & LEVERS, A LA CARTE

1) SELECT KNOB/LEVER

ex: 5132.150.MR – 5132 Lever.Satin Nickel.Minus Rose

2) SELECT ROSE (or ESCUTCHEON)

ex: 5148.150 – Traditional Rose.Satin Nickel

3) SELECT LATCH (or MORTISE LOCK)

ex: 5513.150.P – 2.375˝ Tubular Latch. Satin Nickel.Privacy

4) ADDITIONAL HARDWARE

See following 'HOW TO ORDER' pages for other hardware that may be needed
Eg. pre-drilled door adaptor, privacy pin extension for thicker doors, spindles, etc.

ESCUTCHEON PLATE CONFIGURATIONS – ordered in half pairs except for privacy (.KP) cut-outs which are ordered in pairs.

.KN

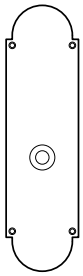

CUT FOR KNOB OR LEVER

.KC

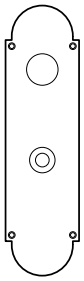

CUT FOR CYLINDER AND KNOB OR LEVER

.KT

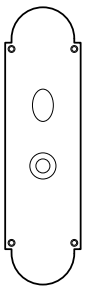

CUT FOR TURN KNOB AND KNOB OR LEVER

.KE

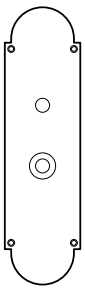

EMERGENCY RELEASE (KNOB AND ER HOLE)

.KP

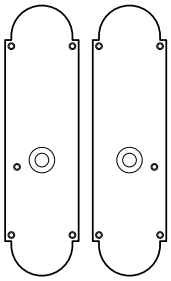

PRIVACY PIN* (KNOB AND PRIVACY PIN HOLE)

*NOT AVAILABLE ON ALL ESCUTCHEONS

DUMMY

Half Dummy w/ Rose

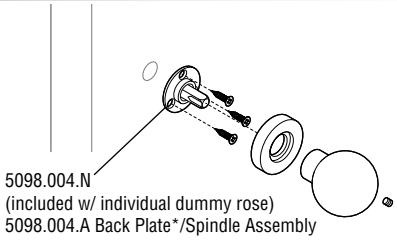

HOW TO ORDER

WHAT YOU NEED:	PART # EXAMPLE	PAGE #
Knob – Individual Minus Rose (.IMR)	5000.150.IMR	
Handed Lever – Right Minus Rose (.RMR or .LMR)	5100.150.RMR	
Rose – Individual (.IDM)	5002.150.IDM	

(Rose .IDM includes 5098.004.N Half Dummy back plate)

INSTALLATION

A.	Position 5098.004.N* Back Plate with dummy spindle at desired location and relieve the door surface to allow flush seating of the back plate. (NOTE: the word "TOP" is marked on the back plate for exact alignment.)
B.	Install screws into back plate.
C.	Thread rose onto back plate and install trim.

NOTE: Nos. 5084/5094 Rigid Mounting Trim is available for thru bolt Dummy Mount applications.

*For exposed screw mounted roses, appropriate half dummy spindle is supplied standard.

Half Dummy (Escutcheon Plate)

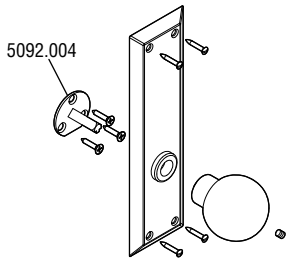

WHAT YOU NEED:	PART # EXAMPLE	PAGE #
Knob – Individual Minus Rose (.IMR)	5000.150.IMR	
Handed Lever – Right Minus Rose (.RMR or .LMR)	5100.150.RMR	
Escutcheon Plate – .KN	6797.150.KN	
Half Dummy Spindle*	5092.004	54

*See Spindles section for length needed

Full Dummy

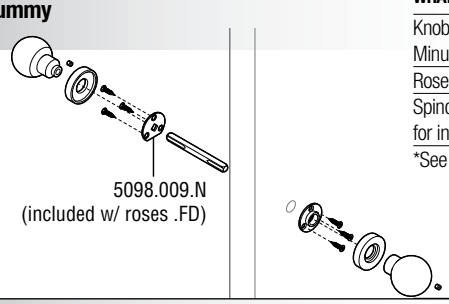

WHAT YOU NEED:	PART # EXAMPLE	PAGE #
Knob or Lever – pair Minus Rose (.MR)	5000.150.MR	
Rose – pair Full Dummy (.FD)	5048.150.FD	
Spindle* – 3.5″ standard for install w/ roses	0510.004	53

*See Spindles Chart for length needed on thicker doors

Full Dummy w/ Pre-Drilled Cut-Out

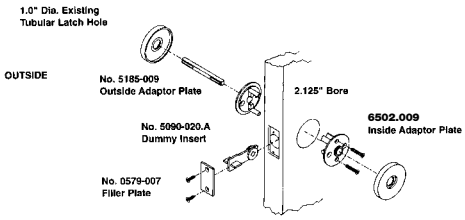

WHAT YOU NEED:	PART # EXAMPLE	PAGE #
For 2.125″ Pre-drilled Doors add: Adaptor	6502.009	51
Dummy Insert & Filler Plate (plugs latch hole)	5090.020.A	
Spindle* – 3.5″ standard for install w/roses	0510.004	53

*See Spindles Chart for length needed on thicker doors

A.	Install 55090.020.A Dummy Insert into tubular latch hole.
B.	Position 6502.009 Adaptor (with threaded studs attached) on outside of door and 6502.009 Adaptor on inside face of door.
C.	Install screws through the inside Adaptor and thread screws into studs.
D.	Install 0579.007 Filler Plate on edge of door.
E.	Thread roses onto 6502.009 Adaptor Set.
F.	Insert spindle and install trim.

Full Dummy (Escutcheon Plate)

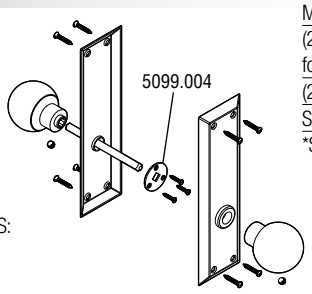

ASSUMED FOR EXAMPLES:
Backset – 2.375″
Door thickness – 1.375″

WHAT YOU NEED:	PART # EXAMPLE	PAGE #
Knob or Lever – pair Minus Rose (.MR)	5000.150.MR	
(2) Escutcheon Plates – Cut for Knob/Lever (.KN)	6797.150.KN	
(2) Dummy Trim Plates	5099.004	54
Spindle* – 4″	0511.004	53

*See Spindles Chart for length needed

A.	Drill a .625″ (16mm) hole completely through the door.
B.	Insert spindle through drilled hole with the V grooves down and toward the bottom hinge.
C.	Slide 5099.004* Back Plates over spindle. (NOTE: the word "TOP" is marked on the back plate for exact alignment.)
D.	Install screws into back plate.
E.	Thread escutcheon onto back plates and install trim.

NOTE: The 5090.020.A Dummy Insert is available with 6502.009 Adaptor Set for full dummy applications on pre-drilled doors.
Refer to Components in this catalog section.

*For full dummy escutcheons, 5099.004 Back Plate is supplied standard.

NOTE: for PRE-DRILLED DOORS, Rose/Escutcheon must be at least 2.625″ diameter/wide to cover bore hole

Passage w/ Rose Installation – Standard Latch

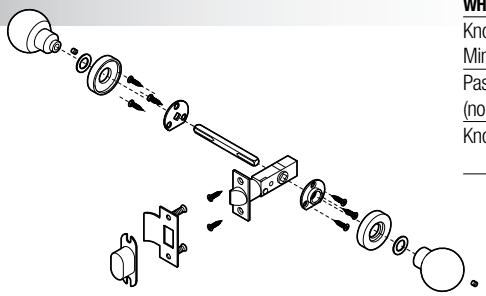

HOW TO ORDER

WHAT YOU NEED:	PART # EXAMPLE	PAGE #
Knob or Lever – pair Minus Rose (.MR)	5000.150.MR	
Passage Rose – pair (no suffix)	5048.150	
Knob Latch (or Lever Latch)	5510.150 (5513.150)	50-51

INSTALLATION

A.	Thread supplied roses onto 5097.009.N Back Plates.
B.	Insert 5095.000 Graphite Spacer over spindle and into rose.
C.	Slide knob or lever trim completely onto the spindle from both sides of the door. (NOTE: A minimal amount of "play" is required between the knob/lever and the rose to prevent the trim from binding.)
D.	Secure steel set screws with.25" Socket Wrench.

IMPORTANT: Set screw is coated with a special epoxy (resin) to prohibit the screw from loosening over time.

Passage Pre-drilled Door

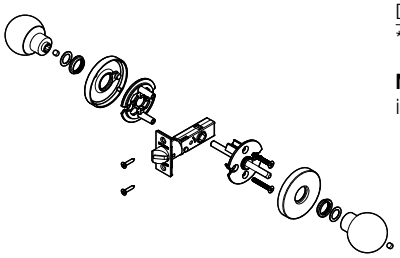

WHAT YOU NEED:	PART # EXAMPLE	PAGE #
For 2.125" Pre-drilled Doors add: Adaptor	6502.009	51

*See Spindles section for length needed

NOTE: For 1.75" or thicker Doors, 3.5" spindle included with Latch will not be long enough.

A.	Install latch and strike per template instructions.
B.	Position 6502.009 Adaptor (with threaded studs attached) on outside of door and 6502.009 Adaptor on inside face of door.
C.	Loosely install screws through the inside plate and thread screws into studs.
D.	Insert alignment bushings into Adaptor and then insert spindle through the alignment bushings and fully tighten screws. Remove alignment bushings and discard.
E.	Thread roses onto 6502.009 Adaptor Set.
F.	Install trim.

Passage (Standard Latch & Escutcheon)

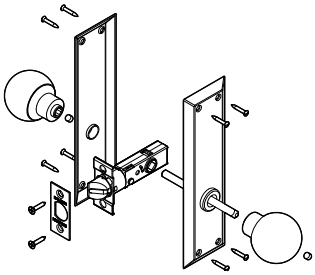

WHAT YOU NEED:	PART # EXAMPLE	PAGE #
Knob or Lever – pair Minus Rose (.MR)	5000.150.MR	
Escutcheon Plates – Cut for Knob/Lever (.KN)	6797.150.KN (X2)	
Knob Latch (or Lever Latch)	5510.150 (5513.150)	50-51
Spindle* – 4"	0511.004	53

*See Spindles section for length needed

Passage (Mortise Lock)

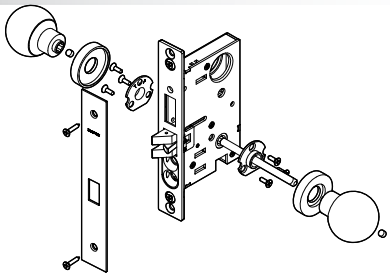

WHAT YOU NEED:	PART # EXAMPLE	PAGE #
Knob or Lever – pair Minus Rose (.MR)	5000.150.MR	
Passage Rose – pair (no suffix)	5017.150	
Mortise Lock, Small Case – passage, 2.5" Backset	8530.150	148
Spindle* – 3.5" standard for install w/ roses	0510.004	53

*See Spindles section for length needed on thicker doors

Passage (Mortise Lock & Escutcheon)

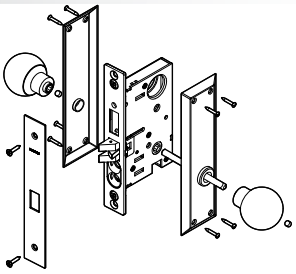

WHAT YOU NEED:	PART # EXAMPLE	PAGE #
Knob or Lever – pair Minus Rose (.MR)	5000.150.MR	
(2) Escutcheon Plates – Cut for Knob/Lever (.KN)	6797.150.KN	
Mortise Lock, Small Case – passage, 2.5" Backset	8350.150.R	148
Spindle* – 4"	0511.004	53

*See Spindles section for length needed.
3.5" Spindle included with 8500 series mortise lock.

PRIVACY

Passage Knob w/Mortise Bolt & Escutcheon Plate

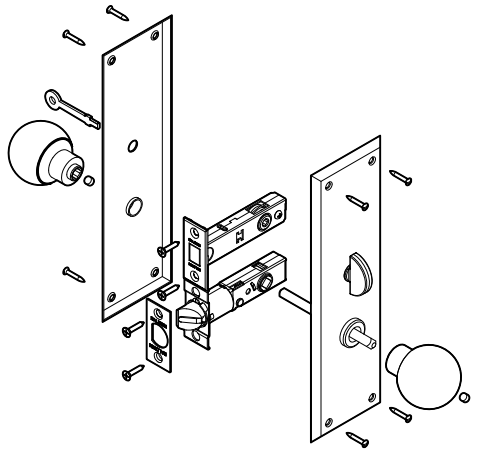

HOW TO ORDER

WHAT YOU NEED	PART # EXAMPLE	PAGE #
Knob or Lever – pair Minus Rose (.MR)	5000.150.MR	
Escutcheon plate – Outside: Cut for Emergency (KE)	6797.150.KE	
Inside: Cut for Turn Knob (KT)	6797.150.KT	
Knob Latch (or Lever Latch)	5510.150 (5513.150)	50-51
Spindle* – 4″	0511.004	53
Mortise Bolt	0418.150.LTP (Less Turn Piece)	55
Combination Strike (Handed)	5528.150.L	52

Privacy with Pin in Escutcheon

NOT AVAILABLE FOR ALL ESCUTCHEONS

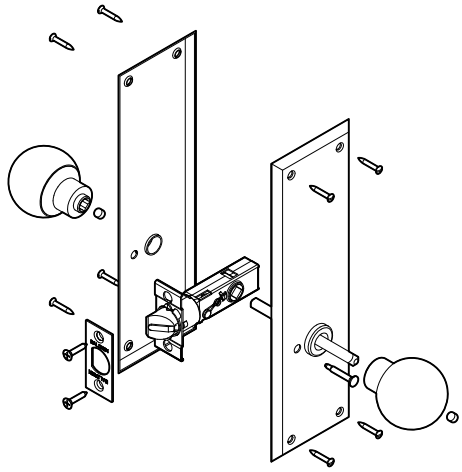

HOW TO ORDER

WHAT YOU NEED	PART # EXAMPLE	PAGE #
Knob or Lever – pair Minus Rose (.MR)	5000.150.MR	
Escutcheons (ordered as pair) KP cut for Privacy	6797.150.KP	
Knob Latch (or Lever Latch)	5510.150.P (5513.150.P)	50-51
Pin Extender (knob sets only) – Doors thicker than 1.625	5199.000	51
Swivel – 4″	0522.004	53

ASSUMED FOR EXAMPLES:
Backset – 2.375″
Door thickness – 1.375″

NOTE: for PRE-DRILLED DOORS, Rose/Escutcheon must be at least 2.625″ diameter/wide to cover bore hole

***See Spindles Chart for length needed**

Privacy Pre-drilled Door

Privacy with Pin in Rose NOT AVAILABLE FOR ALL ROSES

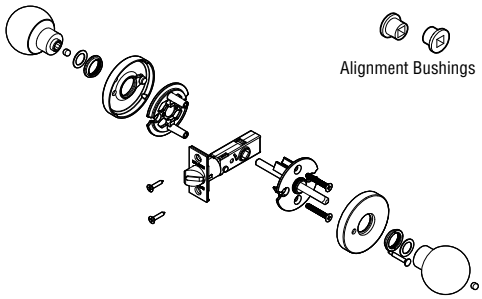

HOW TO ORDER

WHAT YOU NEED:	PART # EXAMPLE	PAGE #
Knob or Lever – pair Minus Rose (.MR)	5000.150.MR	
Privacy Rose** – pair (no suffix)	5149.150	
Knob Latch (or Lever Latch)	5510.150.P + 6502.009 Adaptor* (5513.150.P + 6502.009 Adaptor*)	50-51
Pin Extender –	5199.000	51
Knob Sets: Needed for doors thicker than 1.625″ (see Pin formula)		
Lever Sets: Needed for doors thicker than 1.75″ (see Pin formula)		

**Adaptors are required on doors with 2 1/8" face-bore.

NOTE: Not all Roses available with Privacy Function – see Roses Section

INSTALLATION

A.	Install latch and strike per template instructions.
B.	Position 6502.009 Adaptor (with threaded studs attached) on outside of door and 6502.009 Adaptor on inside face of door.
C.	Loosely install screws through the inside plate and thread screws into studs.
D.	Insert spindle (raised tab should be facing on the outside of door) and then insert alignment bushings into Adaptor. Fully tighten screws. Remove alignment bushings and discard.
E.	To attach roses to Adaptors, place rose over 6502.009 Adaptor and secure by threading 5197.000 brass Rose Retainer onto the Adaptor. Tighten with 5198.000 steel spanner tool provided.
F.	Thread 5510.XXX.0030 or 5513.XXX.0030 Privacy Button into latch. (See page 49 for further details regarding the privacy button.)
G.	Install trim.

Passage Knob w/Mortise Bolt

w/ 2.25″ or smaller roses only

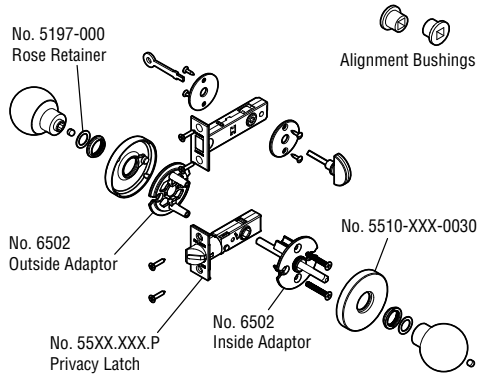

HOW TO ORDER

WHAT YOU NEED:	PART # EXAMPLE	PAGE #
Knob or Lever – pair Minus Rose (.MR)	5000.150.MR	
Passage Rose* – pair (no suffix)	5002.150	
Knob Latch: For Pre-drilled Doors (or Lever Latch: For Pre-drilled Doors)	5510.150 + 6502.009 Adaptor (5513.150 + 6502.009 Adaptor)	50-51
Mortise Bolt	0418.150.LTP (Less Turn Piece)	55
Turn Piece	6750.150	56
Emergency Release Trim	0416.150	58

INSTALLATION

Mortise Bolt Installation

- When installing Mortise bolts, ALWAYS check width of Emergency Release Trim before drilling face bore. Standard bore is .625″ (16mm) completely through door. Emergency Release Trim 0406 and 0407 require a .5″ (13mm) bore on outside face of door; a .625″ (16mm) bore on inside face of door.

IMPORTANT: When Emergency Release Trim is used, the turn piece spindle must be cut to extend no farther than halfway through the bolt.

Tubular Latch/Mortise Bolt Installation

- When installing Mortise bolts with tubular latches, ALWAYS ensure that face plates of both mechanisms have a minimum of .5″ (13mm) clearance between face plates [2.75″ (70mm) minimum distance between center of bolts] for proper strike installation. If mortise bolt and latch/face plates are installed against each other (as illustrated), use 5528 Strike illustrated above, and on page 50.

CAUTION: WHEN ROSES OF 2.625″ DIAMETER ARE USED WITH THIS STRIKE, TURN PIECES NOS. 6728, 6732, 6733, 6734, 6751, and 6762 CANNOT BE USED DUE TO CLEARANCE RESTRICTIONS.

NOTE: 5528 strike is designed with a curved lip. Please specify hand of door when ordering. Hand of strike based on latch bolt being installed below the mortise bolt. Tubular latches and mortise bolts may be used in conjunction with escutcheons. Use of 5528 Strike is required to replace normally furnished strikes due to clearance restrictions.

***See Spindles Chart for length needed**

PRIVACY

2″ Privacy Rose Installation

5097 Backplate

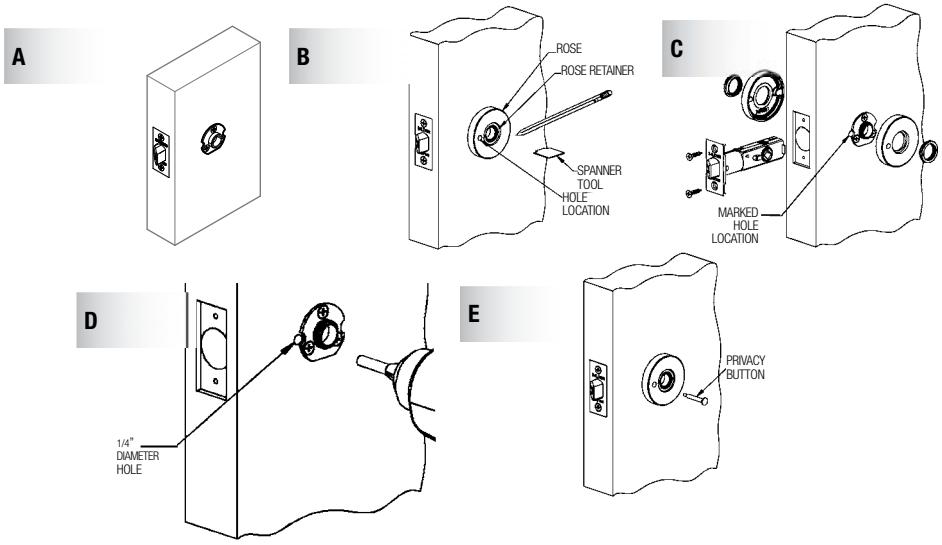

INSTALLATION

A. After completing the latch and backplate installation, a hole for the privacy button needs to be drilled.

The first step is to remove the alignment Bushings and spindle used for the backplate installation process.

B. Attach the roses to the backplates using the rose retainers and tighten with the supplied spanner tool.

Use a pencil to mark the privacy hole location on each side of the door.

C. To avoid damage, remove both roses and the latch before drilling the privacy holes.

D. Drill a 1/4" diameter hole through both sides of the door.

Caution: To assure proper hole location drill from each side of the door and not from one side only.

E. Re-install the latch and re-attach both roses.

On the inside of the room, thread the privacy button into the latch and install the knobs or levers.

NOTE: Installation is also valid for 1.75" privacy roses.

Mortise Lock w/ Emergency Release Trim

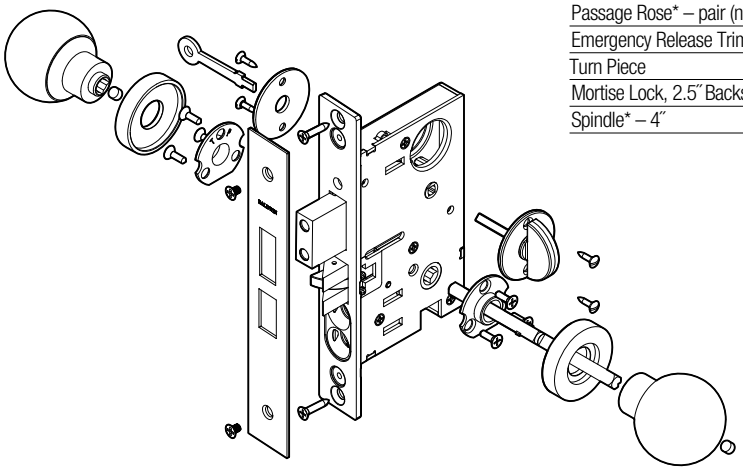

HOW TO ORDER

WHAT YOU NEED	PART # EXAMPLE	PAGE #
Knob or Lever – pair Minus Rose (.MR)	5000.150.MR	
Passage Rose* – pair (no suffix)	5002.150	
Emergency Release Trim –	0404.150	
Turn Piece	6756.150	
Mortise Lock, 2.5″ Backset (Handled)	6315.150.L	149
Spindle* – 4″	0511.004	53

Mortise Lock w/ Escutcheon Plate

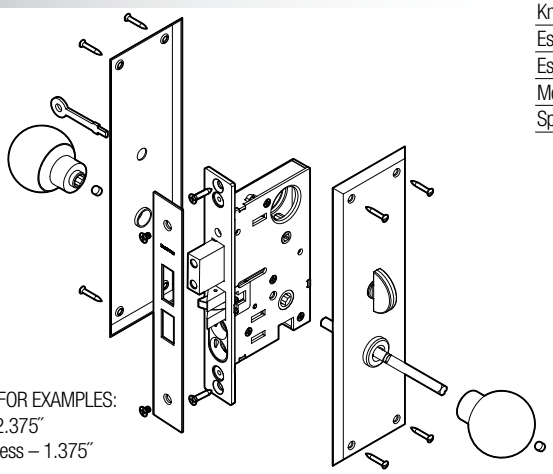

HOW TO ORDER

WHAT YOU NEED	PART # EXAMPLE	PAGE #
Knob or Lever – pair Minus Rose (.MR)	5000.150.MR	
Escutcheon Plate, Exterior	6797.150.KE	
Escutcheon Plate, Interior	6797.150.KT	
Mortise Lock, 2.5″ Backset	6315.150.R	149
Spindle* – 4″	0511.004	53

ASSUMED FOR EXAMPLES:
Backset – 2.375″
Door thickness – 1.375″

NOTE: for PRE-DRILLED DOORS, Rose/Escutcheon must be at least 2.625″ diameter/wide to cover bore hole

***See Spindles Chart for length needed**

ENTRANCE & MORTISE LOCK SETS

STEP 1 PICK YOUR HANDLESET TRIM, W/ KNOB OR LEVER: (SEE PAGE 105 – 143)

STEP 2 PICK YOUR MORTISE BOX

	Suffix*	Minus Strike*
Right hand	.R	.RDT
Left hand	.L	.LDT
Right hand Reverse bevel	.RR	.RRDT
Left hand Reverse bevel	.LR	.LRDT
Right hand Lever Strength	.RLS	.RLSDT
Left hand Lever Strength	.LLS	.LLSDT
Right hand Reverse bevel Lever Strength	.RRLS	. RRLSDT
Left hand Reverse bevel Lever Strength	.LRLS	. LRLSDT
Right hand Reverse bevel Lever Strength with 1″Front	.RRB1	—
Left hand Reverse bevel Lever Strength with 1″Front	.LRB1	—

Entrance Function Mortise Locks	031, 033, 044, 050 060, 102, 112 150, 151, 152 190, 260, 264	003 055 056
Lock with strike	$383	$435
Lock without strike	350	366

				HANDLESET X KNOB		HANDLESET X LEVER		KNOB X KNOB	LEVER X LEVER
Backset	Door Thickness	Function	Mortise Box	Handing	Part Number	Handing	Part Number	Part Number	Part Number
2.75″	1.75″ and up	Residential Entrance	6020	R	6020.xxx.R	RLS	6020.xxx.RLS	6001.xxx.R	6001.xxx.RLS
				L	6020.xxx.L	LLS	6020.xxx.LLS	6001.xxx.L	6001.xxx.LLS
				RR	6020.xxx.RR	RRLS	6020.xxx.RRLS	6001.xxx.RR	6001.xxx.RRLS
				LR	6020.xxx.LR	LRLS	6020.xxx.LRLS	6001.xxx.LR	6001.xxx.LRLS
2.75″	1.75″ and up	Residential Entrance	6021	R	6021.xxx.R	RLS	6021.xxx.RLS	6075.xxx.R	6075.xxx.RLS
		Emergency Egress		L	6021.xxx.L	LLS	6021.xxx.LLS	6075.xxx.L	6075.xxx.LLS
				RR	6021.xxx.RR	RRLS	6021.xxx.RRLS	6075.xxx.RR	6075.xxx.RRLS
				LR	6021.xxx.LR	LRLS	6021.xxx.LRLS	6075.xxx.LR	6075.xxx.LRLS
2.75″	1.75″ and up	Entrance Back-to-Back	6025	-	-	-	-	-	-
2.5″	1.375 /1.75 and up	Residential Entrance	6320	R	6320.xxx.R	RLS	6320.xxx.RLS	6301.xxx.R	6301.xxx.RLS
				L	6320.xxx.L	LLS	6320.xxx.LLS	6301.xxx.L	6301.xxx.LLS
				RR	6320.xxx.RR	RRLS	6320.xxx.RRLS	6301.xxx.RR	6301.xxx.RRLS
				LR	6320.xxx.LR	LRLS	6320.xxx.LRLS	6301.xxx.LR	6301.xxx.LRLS
2.5″	1.375/1.75 and up	Residential Entrance	6321	R	6321.xxx.R	RLS	6321.xxx.RLS	6375.xxx.R	6375.xxx.RLS
		Emergency Egress		L	6321.xxx.L	LLS	6321.xxx.LLS	6375.xxx.L	6375.xxx.LLS
				RR	6321.xxx.RR	RRLS	6321.xxx.RRLS	6375.xxx.RR	6375.xxx.RRLS
				LR	6321.xxx.LR	LRLS	6321.xxx.LRLS	6375.xxx.LR	6375.xxx.LRLS
2.5″	1.375/1.75 and up	Entrance Back-to-Back	6325	-	-	-	-	-	-

STEP 3 PICK YOUR CYLINDER (SEE INSIDE FLAP FOR CYLINDER TABLE)

IF YOUR DOOR IS NOT 1.75″ THICK, ALSO REQUIRED:

STEP 4 SPINDLE (SEE INSIDE FLAP FOR CHART)

STEP 5 THICK DOOR KIT (DOORS OVER 1.75″ AND UP TO 2.25″ THICK, SEE PAGE 144)

STEP 6 EXTENDED LIP STRIKE

6037, 6038, 6039
6338, 6339

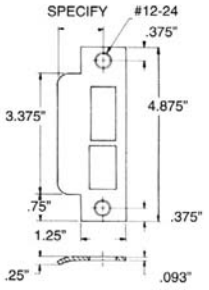

Item #	Function	031 033, 044, 050 060, 102, 112 150, 151, 152 190, 260, 264	003 055 056
6037.xxx.XXXX	2.75″ backset latch, deadbolt, aux latch		
6038.xxx.XXXX	2.75″ backset latch only		
6039.xxx.XXXX	2.75″ backset latch, deadbolt	$76	$82
6338.xxx.XXXX	1.5,″ 2,″ 2.5″ backset latch only		
6339.xxx.XXXX	1.5,″ 2,″ 2.5″ backset latch, deadbolt		

.XXXX indicates Extended Lip to Center size = .R158, .L158, .R178, .L178, .R214, .L214, .R300, .L300

6037, 6038, 6039, 6338, 6339.xxx – EXTENDED LIP STRIKES (HANDED)

> Use with locks installed on special door/frame conditions
> Supplied with a curved lip only
> ALWAYS SPECIFY HAND OF DOOR AND REQUIRED LENGTH
> Note: Reverse bevel doors use opposite hand for strike selection (ie. Right hand reverse bevel use left hand strike.)
> Lip to Center lengths:
.R158 or .L158 – 1.625″ (41mm)
.R178 or .L178 – 1.875″ (48mm)
.R214 or .L214 – 2.25″ (57mm)
.R300 or .L300 – 3″ (76mm)

Lip to Center length determined by the following formula:
Door thickness ÷ 2 + .375″ (10mm) = Lip to Center length
Round to closest size

***Strikes NOT available in Distressed finishes, non-distressed equivalents 402=102, 412=112, 452=152**

PRE-CONFIGURED SETS
KNOBS & LEVERS

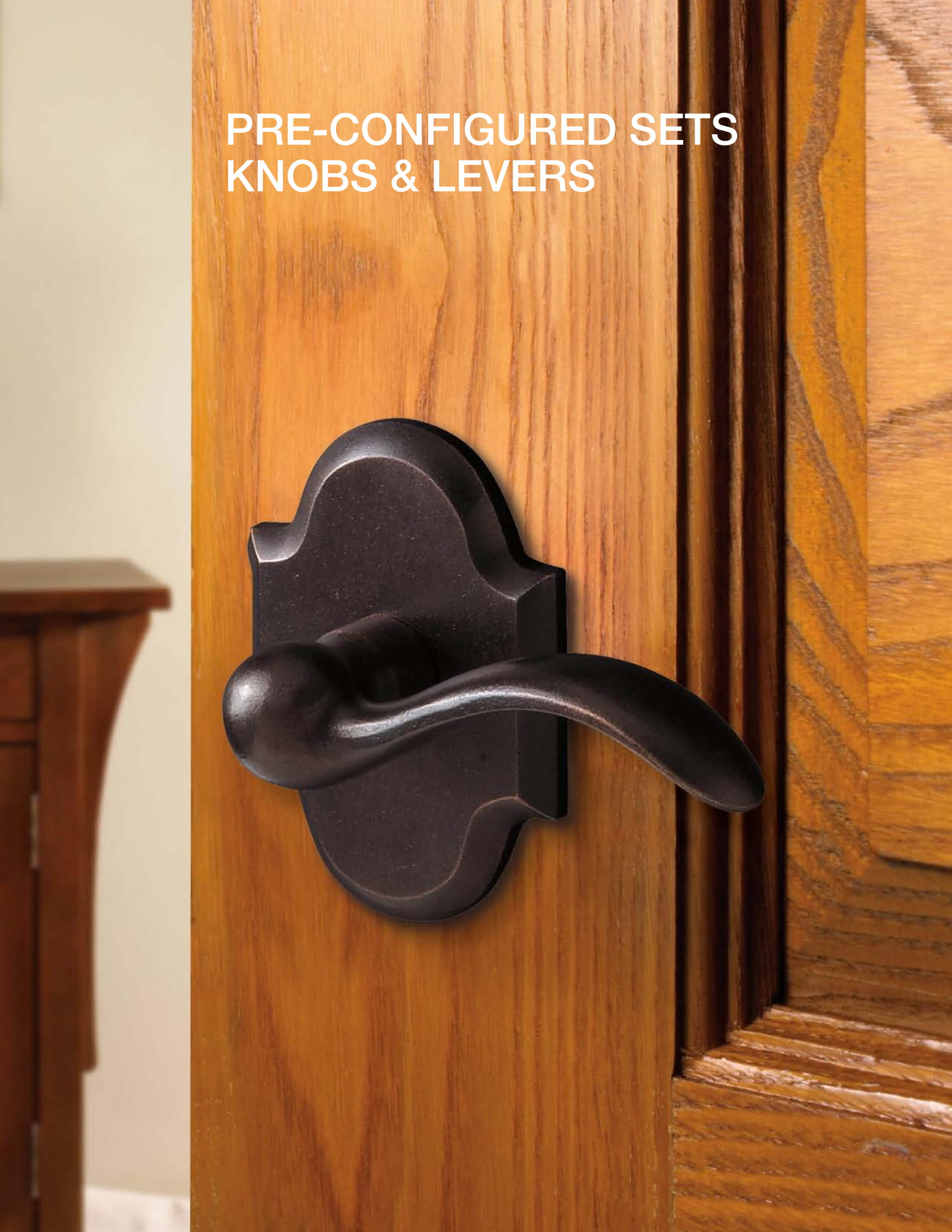

5015 Classic Knob w/ 5048 Rose
Passage, Privacy & Dummy

QUICK SHIP

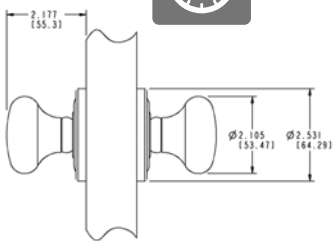

Item #	Description	Wt.	003, 031, 102, 112, 150, 260	055
5015.xxx.FD	Full Dummy	1.9	$169	$205
5015.xxx.IDM	Half Dummy	1.0	$85	$103
5015.xxx.PASS	Passage: 2 3/8″ backset	2.5	$205	$241
5015.xxx.PRIV	Privacy: 2 3/8″ backset	2.5	$205	$241

· Other finishes and roses available a la carte.
· PASS and PRIV functions ship with full lip strike.

5020 Colonial Knob w/ 5048 Rose
Passage, Privacy & Dummy

QUICK SHIP

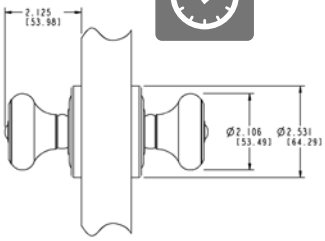

Item #	Description	Wt.	003, 031, 102, 112, 150, 260	055
5020.xxx.FD	Full Dummy	2.0	$169	$205
5020.xxx.IDM	Half Dummy	1.0	$85	$103
5020.xxx.PASS	Passage: 2 3/8″ backset	2.6	$205	$241
5020.xxx.PRIV	Privacy: 2 3/8″ backset	2.6	$205	$241

· Other finishes and roses available a la carte.
· PASS and PRIV functions ship with full lip strike.

5025 Egg Knob w/ 5048 Rose
Passage, Privacy & Dummy

QUICK SHIP

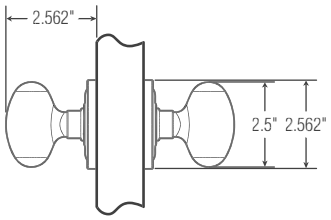

Item #	Description	Wt.	003, 031, 102, 112, 150, 260	055
5025.xxx.FD	Full Dummy	2.8	$169	$205
5025.xxx.IDM	Half Dummy	1.6	$85	$103
5025.xxx.PASS	Passage: 2 3/8″ backset	3.4	$205	$241
5025.xxx.PRIV	Privacy: 2 3/8″ backset	3.4	$205	$241

· Other finishes and roses available a la carte.
· PASS and PRIV functions ship with full lip strike.

5080 Fillmore Knob w/ 5048 Rose
Passage, Privacy & Dummy

QUICK SHIP

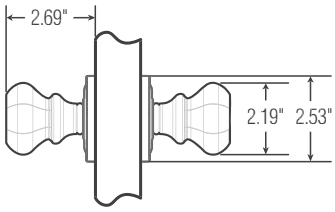

Item #	Description	Wt.	030, 102, 112 140, 150, 260
5080.xxx.FD	Full Dummy	2.5	$169
5080.xxx.IDM	Half Dummy	1.3	$85
5080.xxx.PASS	Passage: 2 3/8″ backset	3.1	$205
5080.xxx.PRIV	Privacy: 2 3/8″ backset	3.1	$205

· Other finishes and roses available a la carte.
· PASS and PRIV functions ship with full lip strike.

NOTE: Accomodates 1 3/8" and 1 3/4" door thickness.

***QUICK SHIP** is available in **limited functions and finishes.**
For complete listing, please refer to page 272.

LEVERS

PRE-CONFIGURED SETS

5445V Classic Lever w/ 5048 Rose

Passage, Privacy & Dummy

QUICK SHIP

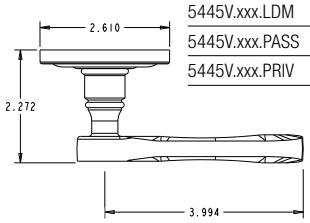

Item #	Description	Wt.	003, 031, 102 112, 150, 260	055
5445V.xxx.FD	Full Dummy	1.5	$169	$205
5445V.xxx.RDM	**RIGHT** Hand Half Dummy	1.1	$85	$103
5445V.xxx.LDM	**LEFT** Hand Half Dummy	1.1	$85	$103
5445V.xxx.PASS	Passage: 2 3/8″ backset	2.1	$205	$241
5445V.xxx.PRIV	Privacy: 2 3/8″ backset	2.1	$205	$241

· Other finishes and roses available a la carte.
· PASS and PRIV functions ship with full lip strike.

5452V Beavertail Lever w/ R030 Rose

Passage, Privacy & Dummy

QUICK SHIP

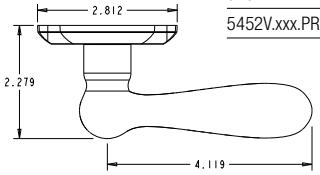

Item #	Description	Wt.	102, 112
5452V.xxx.FD	Full Dummy	2.4	$169
5452V.xxx.RDM	**RIGHT** Hand Half Dummy	1.1	$85
5452V.xxx.LDM	**LEFT** Hand Half Dummy	1.1	$85
5452V.xxx.PASS	Passage: 2 3/8″ backset	2.9	$205
5452V.xxx.PRIV	Privacy: 2 3/8″ backset	2.9	$205

· Other finishes and roses available a la carte.
· PASS and PRIV functions ship with full lip strike.

5455V Wave Lever w/ 5048 Rose

Passage, Privacy & Dummy

QUICK SHIP

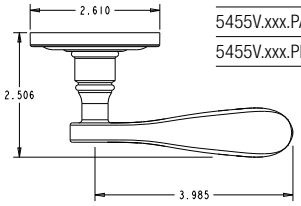

Item #	Description	Wt.	003, 031, 102 112, 150, 260	055
5455V.xxx.FD	Full Dummy	1.5	$169	$205
5455V.xxx.RDM	**RIGHT** Hand Half Dummy	0.8	$85	$103
5455V.xxx.LDM	**LEFT** Hand Half Dummy	0.8	$85	$103
5455V.xxx.PASS	Passage: 2 3/8″ backset	2.1	$205	$241
5455V.xxx.PRIV	Privacy: 2 3/8″ backset	2.1	$205	$241

· Other finishes and roses available a la carte.
· PASS and PRIV functions ship with full lip strike.

5485V Soho Lever w/ R026 Rose

Passage, Privacy & Dummy

QUICK SHIP

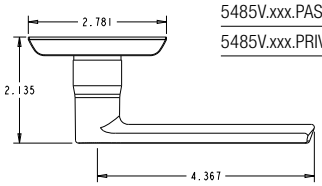

Item #	Description	Wt.	102, 150, 260	055, 056
5485V.xxx.FD	Full Dummy	1.8	$169	$205
5485V.xxx.RDM	**RIGHT** Hand Half Dummy	1.0	$85	$103
5485V.xxx.LDM	**LEFT** Hand Half Dummy	1.0	$85	$103
5485V.xxx.PASS	Passage: 2 3/8″ backset	2.3	$205	$241
5485V.xxx.PRIV	Privacy: 2 3/8″ backset	2.3	$205	$241

· Other finishes and roses available a la carte.
· PASS and PRIV functions ship with full lip strike.

5162 Lever w/ R017 Rose

Passage, Privacy & Dummy

QUICK SHIP

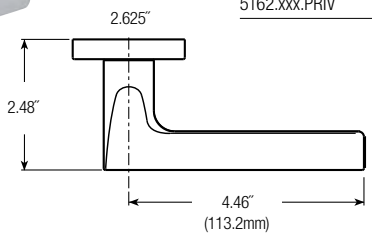

Item #	Description	Wt.	102, 150, 260	055, 056
5162.xxx.FD	Full Dummy	2.2	$194	$229
5162.xxx.RDM	**RIGHT** Hand Half Dummy	1.1	$97	$116
5162.xxx.LDM	**LEFT** Hand Half Dummy	1.1	$97	$116
5162.xxx.PASS	Passage: 2 3/8″ backset	2.8	$229	$266
5162.xxx.PRIV	Privacy: 2 3/8″ backset	2.8	$229	$266

· Other finishes and roses available a la carte.
· PASS and PRIV functions ship with full lip strike.

NOTE: Accomodates 1 3/8" and 1 3/4" door thickness.

***QUICK SHIP** is available in **limited functions and finishes.**
For complete listing, please refer to page 272.

All Estate levers are ADA 4.13.9 Compliant

Classic Knob w/ Classic Rose

QUICK SHIP

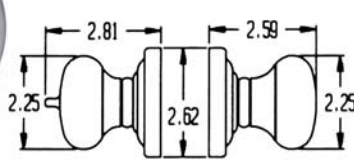

Item #	Description	Wt.	003, 031, 033 050, 060, 102 112, 150, 151 190, 260, 264	044, 055, 056 402, 452
5205.xxx.ENTR	Emergency Exit	3.1	$266	$301
5206.xxx.ENTR	Emergency Exit: 1 ⅞″ to 2 ¼″ doors	3.1	$266	$301
5205.xxx.FD	Full Dummy	1.9	$230	$266
5206.xxx.FD	Full Dummy: 1 ⅞″ to 2 ¼″ doors	1.9	$230	$266
5208.xxx.ENTR	Standard	3.1	$266	$301
5209.xxx.ENTR	Standard: 1 ⅞″ to 2 ¼″ doors	3.1	$266	$301

NOTE: Split finish available, please contact customer service for special order instructions.

Colonial Knob w/ Classic Rose

QUICK SHIP

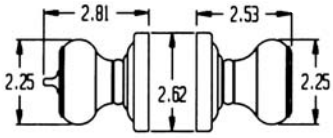

Item #	Description	Wt.	003, 031, 033 050, 060, 102 112, 150, 151 190, 260, 264	044, 055, 056 402, 452
5210.xxx.ENTR	Emergency Exit	3.1	$266	$301
5211.xxx.ENTR	Emergency Exit: 1 ⅞″ to 2 ¼″ doors	3.1	$266	$301
5210.xxx.FD	Full Dummy	2.1	$230	$266
5211.xxx.FD	Full Dummy: 1 ⅞″ to 2 ¼″ doors	2.1	$230	$266
5213.xxx.ENTR	Standard	3.1	$266	$301
5214.xxx.ENTR	Standard: 1 ⅞″ to 2 ¼″ doors	3.1	$266	$301

NOTE: Split finish available, please contact customer service for special order instructions.

Modern Knob w/ Contemporary Rose

QUICK SHIP

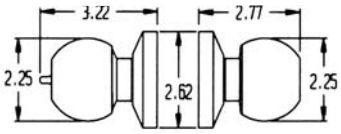

5 pin standard
6 pin capability

Item #	Description	Wt.	003, 031, 033 050, 060, 102 112, 150, 151 190, 260, 264	044, 055, 056 402, 452
5215.xxx.ENTR	Emergency Exit	3.4	$266	$301
5216.xxx.ENTR	Emergency Exit: 1 ⅞″ to 2 ¼″ doors	3.4	$266	$301
5215.xxx.FD	Full Dummy	2.5	$230	$266
5216.xxx.FD	Full Dummy: 1 ⅞″ to 2 ¼″ doors	2.5	$230	$266
5218.xxx.ENTR	Standard	3.4	$266	$301
5219.xxx.ENTR	Standard: 1 ⅞″ to 2 ¼″ doors	3.4	$266	$301

NOTE: Split finish available, please contact customer service for special order instructions.

Contemporary Knob w/ Contemporary Rose

QUICK SHIP

Available while supplies last.

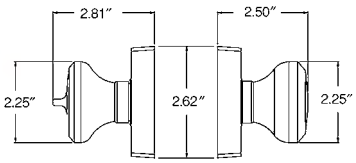

Item #	Description	Wt.	003, 031, 033 050, 060, 102 112, 150, 151 190, 260, 264	044, 055, 056 402, 452
5275.xxx.ENTR	Emergency Exit	4.2	$266	$301
5276.xxx.ENTR	Emergency Exit: 1 ⅞″ to 2 ¼″ doors	4.2	$266	$301
5275.xxx.FD	Full Dummy	3.9	$230	$266
5276.xxx.FD	Full Dummy: 1 ⅞″ to 2 ¼″ doors	3.9	$230	$266
5278.xxx.ENTR	Standard	4.2	$266	$301
5279.xxx.ENTR	Standard: 1 ⅞″ to 2 ¼″ doors	4.2	$266	$301

NOTE: Split finish available, please contact customer service for special order instructions.

Egg Knob w/ Classic Rose

QUICK SHIP

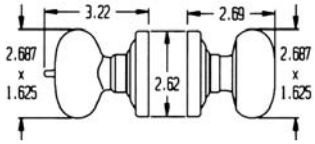

5 pin standard
6 pin capability

Item #	Description	Wt.	003, 031, 033 050, 060, 102 112, 150, 151 190, 260, 264	044, 055, 056 402, 452
5225.xxx.ENTR	Emergency Exit	3.6	$266	$301
5226.xxx.ENTR	Emergency Exit: 1 ⅞″ to 2 ¼″ doors	3.6	$266	$301
5225.xxx.FD	Full Dummy	3.0	$230	$266
5226.xxx.FD	Full Dummy: 1 ⅞″ to 2 ¼″ doors	3.0	$230	$266
5228.xxx.ENTR	Standard	3.6	$266	$301
5229.xxx.ENTR	Standard: 1 ⅞″ to 2 ¼″ doors	3.6	$266	$301

NOTE: Split finish available, please contact customer service for special order instructions.

NOTE: Accomodates 1 3/8" and 1 3/4" door thickness.

Emergency Exit: The Knob or lever will retract the bolt while the exterior remains locked.
Standard Exit: The knob or lever must be unlocked prior to exit.

***QUICK SHIP** is available in **limited functions and finishes.**
For complete listing, please refer to page 272.

KNOBS & LEVERS

TUBULAR KEYED ENTRY

Bethpage Knob

QUICK SHIP

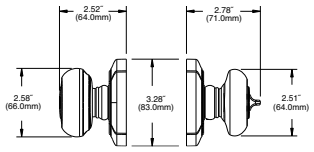

5 pin capability
6 pin capability

Item #	Description	Wt.	003, 031, 033 050, 060, 102 112, 150, 151 190, 260, 264	044, 055, 056 402, 452
5237.xxx.ENTR	Emergency Exit	3.6	$266	$301
5238.xxx.ENTR	Emergency Exit: 1 7/8" to 2 1/4" doors	3.6	$266	$301
5237.xxx.FD	Full Dummy	3.0	$230	$266
5238.xxx.FD	Full Dummy: 1 7/8" to 2 1/4" doors	3.0	$230	$266
5239.xxx.ENTR	Standard	3.6	$266	$301
5241.xxx.ENTR	Standard: 1 7/8" to 2 1/4" doors	3.0	$266	$301

NOTE: Split finish available, please contact customer service for special order instructions.

Contemporary Knob w/ Round Rose

QUICK SHIP

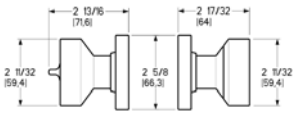

5 pin capability
6 pin capability

Coming Spring 2020

Item #	Description	Wt.	003, 031, 033, 102, 112, 150, 151, 190, 260, 264	044, 055, 056
5230.xxx.ENTR	Emergency Exit	3.6	$266	$301
5231.xxx.ENTR	Emergency Exit: 1 7/8" to 2 1/4" doors	3.6	$266	$301
5230.xxx.FD	Full Dummy	3.0	$230	$266
5231.xxx.FD	Full Dummy: 1 7/8" to 2 1/4" doors	3.0	$230	$266
5233.xxx.ENTR	Standard	3.6	$266	$301
5234.xxx.ENTR	Standard: 1 7/8" to 2 1/4" doors	3.0	$266	$301

NOTE: Split finish available, please contact customer service for special order instructions.

Contemporary Knob w/ Square Rose

QUICK SHIP

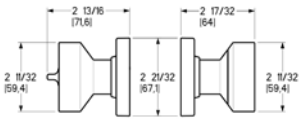

5 pin capability
6 pin capability

Coming Spring 2020

Item #	Description	Wt.	003, 031, 033, 102, 112, 150, 151, 190, 260, 264	044, 055, 056
5250.xxx.ENTR	Emergency Exit	4.3	$266	$301
5251.xxx.ENTR	Emergency Exit: 1 7/8" to 2 1/4" doors	4.3	$266	$301
5250.xxx.FD	Full Dummy	3.1	$230	$266
5251.xxx.FD	Full Dummy: 1 7/8" to 2 1/4" doors	3.1	$230	$266
5253.xxx.ENTR	Standard	4.3	$266	$301
5254.xxx.ENTR	Standard: 1 7/8" to 2 1/4" doors	4.3	$266	$301

NOTE: Split finish available, please contact customer service for special order instructions.

NOTE: Accomodates 1 3/8" and 1 3/4" door thickness.

***QUICK SHIP** is available in **limited functions and finishes.**
For complete listing, please refer to page 272.

Emergency Exit: The Knob or lever will retract the bolt while the exterior remains locked. **Standard Exit:** The knob or lever must be unlocked prior to exit.

Square Lever w/ Round Rose

QUICK SHIP

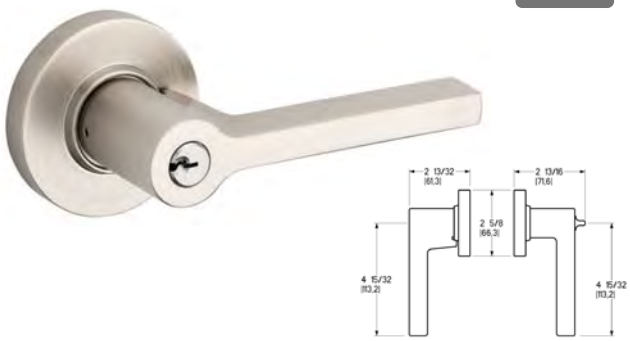

5 pin capability
6 pin capability

Coming Spring 2020

Item #	Description	Wt.	003, 031, 033, 102, 112, 150, 151, 190, 260, 264	044, 055, 056
5260.xxx.RENT	**RIGHT** Hand Emergency Exit	3.6	$266	$301
5260.xxx.LENT	**LEFT** Hand Emergency Exit	3.6	$266	$301
5261.xxx.RENT	**RIGHT** Hand Emergency Exit: 1 7/8″ to 2 1/4″ doors	3.6	$266	$301
5261.xxx.LENT	**LEFT** Hand Emergency Exit: 1 7/8″ to 2 1/4″ doors	3.6	$266	$301
5260.xxx.FD	Full Dummy	3.1	$230	$266
5261.xxx.FD	Full Dummy: 1 7/8″ to 2 1/4″ doors	3.1	$230	$266
5263.xxx.RENT	**RIGHT** Hand Standard	3.6	$266	$301
5263.xxx.LENT	**LEFT** Hand Standard	3.6	$266	$301
5264.xxx.RENT	**RIGHT** Hand Standard: 1 7/8″ to 2 1/4″ doors	3.6	$266	$301
5264.xxx.LENT	**LEFT** Hand Standard: 1 7/8″ to 2 1/4″ doors	3.6	$266	$301

NOTE: Split finish available, please contact customer service for special order instructions.

Square Lever w/ Square Rose

QUICK SHIP

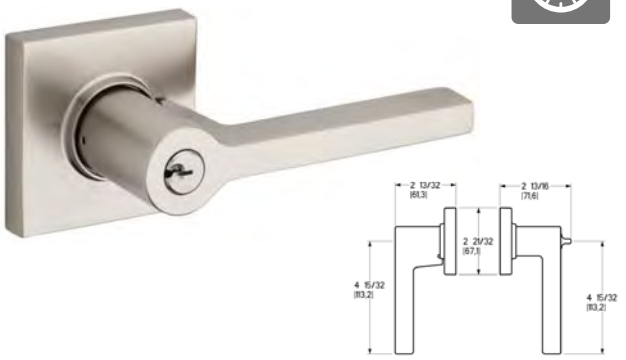

5 pin capability
6 pin capability

Coming Spring 2020

Item #	Description	Wt.	003, 031, 033, 102, 112, 150, 151, 190, 260, 264	044, 055, 056
5285.xxx.RENT	**RIGHT** Hand Emergency Exit	3.7	$266	$301
5285.xxx.LENT	**LEFT** Hand Emergency Exit	3.7	$266	$301
5286.xxx.RENT	**RIGHT** Hand Emergency Exit: 1 7/8″ to 2 1/4″ doors	3.7	$266	$301
5286.xxx.LENT	**LEFT** Hand Emergency Exit: 1 7/8″ to 2 1/4″ doors	3.7	$266	$301
5285.xxx.FD	Full Dummy	3.2	$230	$266
5286.xxx.FD	Full Dummy: 1 7/8″ to 2 1/4″ doors	3.2	$230	$266
5288.xxx.RENT	**RIGHT** Hand Standard	3.7	$266	$301
5288.xxx.LENT	**LEFT** Hand Standard	3.7	$266	$301
5289.xxx.RENT	**RIGHT** Hand Standard: 1 7/8″ to 2 1/4″ doors	3.7	$266	$301
5289.xxx.LENT	**LEFT** Hand Standard: 1 7/8″ to 2 1/4″ doors	3.7	$266	$301

NOTE: Split finish available, please contact customer service for special order instructions.

Bethpage Lever w/ Bethpage Rose

QUICK SHIP

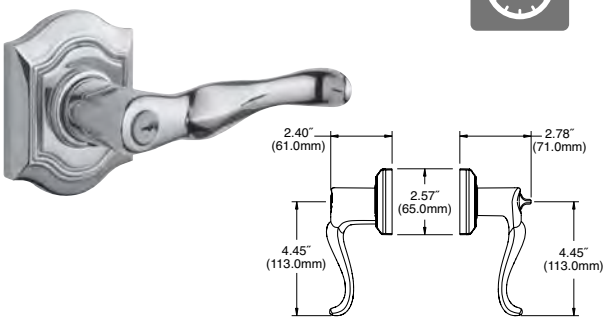

5 pin standard
6 pin capability

Item #	Description	Wt.	003, 031, 033 050, 060, 102 112, 150, 151 190, 260, 264	044, 055, 056 402, 452
5237.xxx.RENT	**RIGHT** Hand Emergency Exit	3.9	$266	$301
5237.xxx.LENT	**LEFT** Hand Emergency Exit	3.9	$266	$301
5238.xxx.RENT	**RIGHT** Hand Emergency Exit: 1 7/8″ to 2 1/4″ doors	3.5	$266	$301
5238.xxx.LENT	**LEFT** Hand Emergency Exit: 1 7/8″ to 2 1/4″ doors	3.5	$266	$301
5237.xxx.LRFD	Full Dummy	3.0	$230	$266
5238.xxx.LRFD	Full Dummy: 1 7/8″ to 2 1/4″ doors	3.0	$230	$266
5239.xxx.RENT	**RIGHT** Hand Standard	3.9	$266	$301
5239.xxx.LENT	**LEFT** Hand Standard	3.9	$266	$301
5241.xxx.RENT	**RIGHT** Hand Standard: 1 7/8″ to 2 1/4″ doors	3.5	$266	$301
5241.xxx.LENT	**LEFT** Hand Standard: 1 7/8″ to 2 1/4″ doors	3.5	$266	$301

NOTE: Split finish available, please contact customer service for special order instructions.

***QUICK SHIP** is available in **limited functions and finishes.**
For complete listing, please refer to page 272.

KNOBS & LEVERS

TUBULAR KEYED ENTRY

Classic Lever w/ Classic Rose

QUICK SHIP

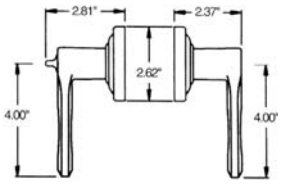

5 pin standard
6 pin capability

Item #	Description	Wt.	003, 031, 033 050, 060, 102 112, 150, 151 190, 260, 264	044, 055, 056 402, 452
5245.xxx.RENT	**RIGHT** Hand Emergency Exit	2.2	$266	$301
5245.xxx.LENT	**LEFT** Hand Emergency Exit	2.2	$266	$301
5246.xxx.RENT	**RIGHT** Hand Emergency Exit: 1 7/8" to 2 1/4" doors	2.2	$266	$301
5246.xxx.LENT	**LEFT** Hand Emergency Exit: 1 7/8" to 2 1/4" doors	2.2	$266	$301
5245.xxx.FD	Full Dummy	2.0	$230	$266
5246.xxx.FD	Full Dummy: 1 7/8" to 2 1/4" doors	2.0	$230	$266
5248.xxx.RENT	**RIGHT** Hand Standard	2.2	$266	$301
5248.xxx.LENT	**LEFT** Hand Standard	2.2	$266	$301
5249.xxx.RENT	**RIGHT** Hand Standard: 1 7/8" to 2 1/4" doors	2.2	$266	$301
5249.xxx.LENT	**LEFT** Hand Standard: 1 7/8" to 2 1/4" doors	2.2	$266	$301

NOTE: Split finish available, please contact customer service for special order instructions.

Wave Lever w/ Classic Rose

QUICK SHIP

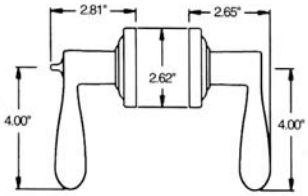

5 pin standard
6 pin capability

Item #	Description	Wt.	003, 031, 033 050, 060, 102 112, 150, 151 190, 260, 264	044, 055, 056 402, 452
5255.xxx.RENT	**RIGHT** Hand Emergency Exit	2.8	$266	$301
5255.xxx.LENT	**LEFT** Hand Emergency Exit	2.8	$266	$301
5256.xxx.RENT	**RIGHT** Hand Emergency Exit: 1 7/8" to 2 1/4" doors	2.8	$266	$301
5256.xxx.LENT	**LEFT** Hand Emergency Exit: 1 7/8" to 2 1/4" doors	2.8	$266	$301
5255.xxx.FD	Full Dummy	2.0	$230	$266
5256.xxx.FD	Full Dummy: 1 7/8" to 2 1/4" doors	2.0	$230	$266
5258.xxx.RENT	**RIGHT** Hand Standard	2.8	$266	$301
5258.xxx.LENT	**LEFT** Hand Standard	2.8	$266	$301
5259.xxx.RENT	**RIGHT** Hand Standard: 1 7/8" to 2 1/4" doors	2.8	$266	$301
5259.xxx.LENT	**LEFT** Hand Standard: 1 7/8" to 2 1/4" doors	2.8	$266	$301

NOTE: Split finish available, please contact customer service for special order instructions.

NOTES

A LA CARTE KNOBS & LEVERS

SOLID BRASS & CRYSTAL

5000 Knob
shown w/ 5002 Rose

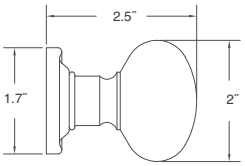

Item #	Description	Wt.	003, 031, 033, 050, 060, 102, 112, 150, 151, 190, 260 264	044, 055, 056, 402, 452
5000.xxx.MR	Minus Roses – pair	1.8	$194	$218
5000.xxx.IMR	Individual Minus Rose – half pair	0.9	$97	$109
5000.xxx.MRPN	Minus Roses – pair (PINNED)	1.8	$263	$289

5001 Knob
shown w/ 5046 Rose

Available while supplies last.

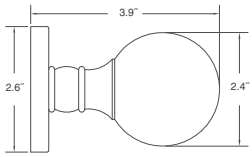

Item #	Description	Wt.	030, 150, 260
5001.xxx.MR	Minus Roses – pair	2.7	$194
5001.xxx.IMR	Individual Minus Rose – half pair	1.4	$97
5001.xxx.MRPN	Minus Roses – pair (PINNED)	2.7	$263

5005 Knob
shown w/ 5002 Rose

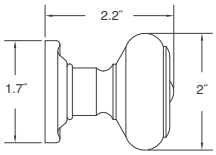

Item #	Description	Wt.	003, 031, 033, 050, 060, 102, 112, 150, 151, 190, 260 264	044, 055, 056, 402, 452
5005.xxx.MR	Minus Roses – pair	1.8	$194	$218
5005.xxx.IMR	Individual Minus Rose – half pair	0.9	$97	$110
5005.xxx.MRPN	Minus Roses – pair (PINNED)	1.8	$263	$289

5009 Knob – SWAROVSKI CRYSTAL
shown w/ 5048 Rose

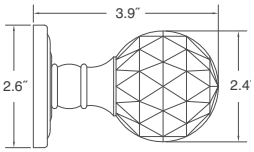

Item #	Description	Wt.	030, 150, 260
5009.xxx.MR	Minus Roses – pair	2.8	$613
5009.xxx.IMR	Individual Minus Rose – half pair	1.4	$306
5009.xxx.MRPN	Minus Roses – pair (PINNED)	2.8	$691

5011 Knob
shown w/ 5058 Rose

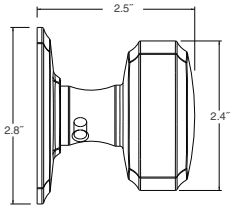

Item #	Description	Wt.	003, 031, 033, 050, 060, 102, 112, 150, 151, 190, 260 264	044, 055, 056, 402, 452
5011.xxx.MR	Minus Roses – pair	1.1	$206	$230
5011.xxx.IMR	Individual Minus Rose – half pair	0.55	$103	$116
5011.xxx.MRPN	Minus Roses – pair (PINNED)	1.1	$285	$311

SOLID BRASS

5013 Knob
shown w/ 5016 Rose

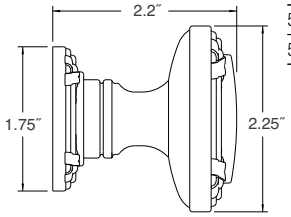

Item #	Description	Wt.	003, 031, 033, 050, 060, 102, 112, 150, 151, 190, 260 264	044, 055, 056, 402, 452
5013.xxx.MR	Minus Roses – pair	2.1	$194	$218
5013.xxx.IMR	Individual Minus Rose – half pair	1.1	$97	$109
5013.xxx.MRPN	Minus Roses – pair (PINNED)	2.1	$258	$252

5015 Knob
shown w/ 5017 Rose

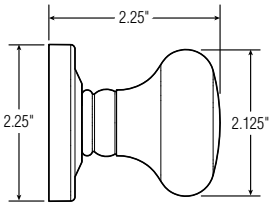

Item #	Description	Wt.	003, 031, 033, 050, 060, 102, 112, 150, 151, 190, 260 264	044, 055, 056, 402, 452
5015.xxx.MR	Minus Roses – pair	1.8	$158	$182
5015.xxx.IMR	Individual Minus Rose – half pair	0.9	$79	$92
5015.xxx.MRPN	Minus Roses – pair (PINNED)	1.8	$227	$261

For easy ordering, select finishes and functions of pre-configured tubular sets are available on page 13.

5020 Knob
shown w/ 5017 Rose

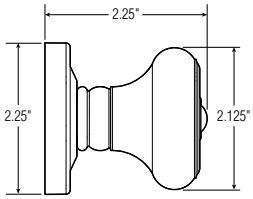

Item #	Description	Wt.	003, 031, 033, 050, 060, 102, 112, 150, 151, 190, 260 264	044, 055, 056, 402, 452
5020.xxx.MR	Minus Roses – pair	1.8	$158	$182
5020.xxx.IMR	Individual Minus Rose – half pair	0.9	$79	$92
5020.xxx.MRPN	Minus Roses – pair (PINNED)	1.8	$227	$261

For easy ordering, select finishes and functions of pre-configured tubular sets are available on page 13.

5023 Knob
shown w/ 5059 Rose

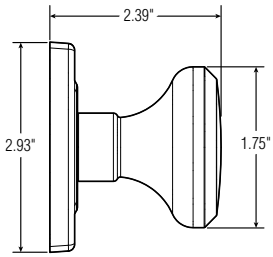

Item #	Description	Wt.	003, 031, 033, 050, 060, 102, 112, 150, 151, 190, 260 264	044, 055, 056, 402, 452
5023.xxx.MR	Minus Roses – pair	1.8	$158	$182
5023.xxx.IMR	Individual Minus Rose – half pair	0.9	$79	$92
5023.xxx.MRPN	Minus Roses – pair (PINNED)	1.8	$236	$261

5024 Oval Knob
shown w/ R030 Arch Rose

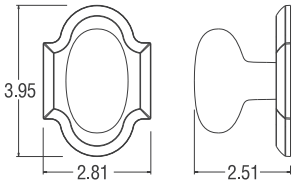

Item #	Description	Wt.	003, 031, 033, 050, 060, 102, 112, 150, 151, 190, 260 264	044, 055, 056, 402, 452
5024.xxx.MR	Minus Roses – pair	1.8	$158	$182
5024.xxx.IMR	Minus Roses - half pair	0.9	$79	$92

5025 Knob
shown w/ 5002 Rose

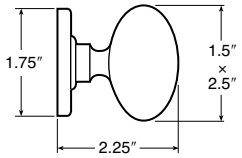

Item #	Description	Wt.	003, 031, 033, 050, 060, 102, 112, 150, 151, 190, 260 264	044, 055, 056, 402, 452
5025.xxx.MR	Minus Roses – pair	1.8	$158	$182
5025.xxx.IMR	Individual Minus Rose – half pair	0.9	$79	$92
5025.xxx.MRPN	Minus Roses – pair (PINNED)	1.8	$227	$233

For easy ordering, select finishes and functions of pre-configured tubular sets are available on page 13.

5030 Knob
shown w/ 5002 Rose

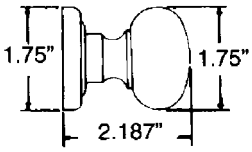

Item #	Description	Wt.	003, 031, 033, 050, 060, 102, 112, 150, 151, 190, 260 264	044, 055, 056, 402, 452
5030.xxx.MR	Minus Roses – pair	1.8	$194	$218
5030.xxx.IMR	Individual Minus Rose – half pair	0.9	$97	$109
5030.xxx.MRPN	Minus Roses – pair (PINNED)	1.8	$263	$297

5041 Knob
shown w/ 5046 Rose

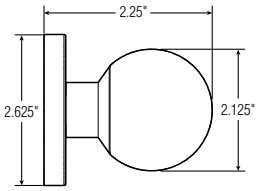

Item #	Description	Wt.	003, 031, 033, 050, 060, 102, 112, 150, 151, 190, 260 264	044, 055, 056, 402, 452
5041.xxx.MR	Minus Roses – pair	2.4	$158	$182
5041.xxx.IMR	Individual Minus Rose – half pair	1.2	$79	$92
5041.xxx.MRPN	Minus Roses – pair (PINNED)	2.4	$233	$261

5045 Knob
shown w/ 5046 Rose

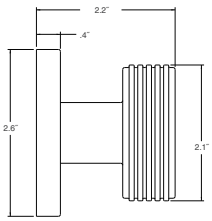

Item #	Description	Wt.	003, 031, 033, 050, 060, 102, 112, 150, 151, 190, 260 264	044, 055, 056, 402, 452
5045.xxx.MR	Minus Roses – pair	1.1	$206	$230
5045.xxx.IMR	Individual Minus Rose – half pair	0.55	$103	$116
5045.xxx.MRPN	Minus Roses – pair (PINNED)	1.1	$275	$311

5050 Knob
shown w/ 5053 Rose

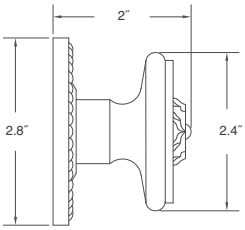

Item #	Description	Wt.	003, 031, 033, 050, 060, 102, 112, 150, 151, 190, 260 264	044, 055, 056, 402, 452
5050.xxx.MR	Minus Roses – pair	1.9	$194	$218
5050.xxx.IMR	Individual Minus Rose – half pair	1.0	$97	$109
5050.xxx.MRPN	Minus Roses – pair (PINNED)	1.9	$273	$297

SOLID BRASS

5055 Knob
shown w/ 5032 Rose

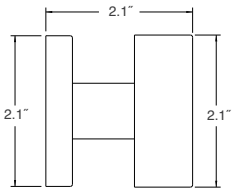

Item #	Description	Wt.	003, 031, 033, 050, 060, 102, 112, 150, 151, 190, 260 264	044, 055, 056, 402, 452
5055.xxx.MR	Minus Roses – pair	1.9	$194	$218
5055.xxx.IMR	Individual Minus Rose – half pair	1.0	$97	$109
5055.xxx.MRPN	Minus Roses – pair (PINNED)	1.9	$263	$297

5057 Knob
shown w/ 5002 Rose

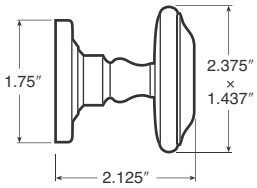

Item #	Description	Wt.	003, 031, 033, 050, 060, 102, 112, 150, 151, 190, 260 264	044, 055, 056, 402, 452
5057.xxx.MR	Minus Roses – pair	1.4	$194	$218
5057.xxx.IMR	Individual Minus Rose – half pair	0.7	$97	$109
5057.xxx.MRPN	Minus Roses – pair (PINNED)	1.4	$263	$297

5060 Knob
shown w/ 5062 Rose

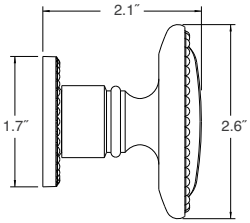

Item #	Description	Wt.	003, 031, 033, 050, 060, 102, 112, 150, 151, 190, 260 264	044, 055, 056, 402, 452
5060.xxx.MR	Minus Roses – pair	1.4	$194	$218
5060.xxx.IMR	Individual Minus Rose – half pair	0.7	$97	$109
5060.xxx.MRPN	Minus Roses – pair (PINNED)	1.4	$255	$278

5064 Knob
shown w/ 5004 Rose

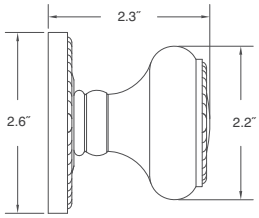

Item #	Description	Wt.	003, 031, 033, 050, 060, 102, 112, 150, 151, 190, 260 264	044, 055, 056, 402, 452
5064.xxx.MR	Minus Roses – pair	1.9	$194	$218
5064.xxx.IMR	Individual Minus Rose – half pair	1.0	$94	$104
5064.xxx.MRPN	Minus Roses – pair (PINNED)	1.9	$255	$278

5066 Knob
shown w/ 5078 Rose

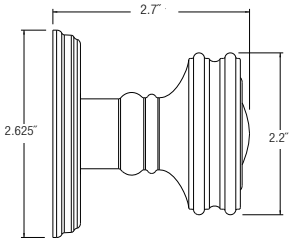

Item #	Description	Wt.	003, 031, 033, 050, 060, 102, 112, 150, 151, 190, 260 264	044, 055, 056, 402, 452
5066.xxx.MR	Minus Roses – pair	1.1	$206	$230
5066.xxx.IMR	Individual Minus Rose – half pair	0.55	$103	$116
5066.xxx.MRPN	Minus Roses – pair (PINNED)	1.1	$266	$289

5067 Knob
shown w/ 5003 Rose

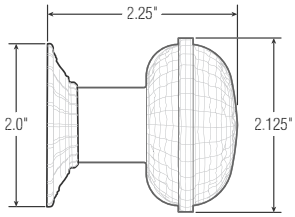

Item #	Description	Wt.	003, 031, 033, 050, 060, 102, 112, 150, 151, 190, 260 264	044, 055, 056, 402, 452
5067.xxx.MR	Minus Roses – pair	1.0	$194	$218
5067.xxx.IMR	Individual Minus Rose – half pair	0.5	$97	$109
5067.xxx.MRPN	Minus Roses – pair (PINNED)	2.3	$273	$297

5068 Knob
shown w/ 5070 Rose

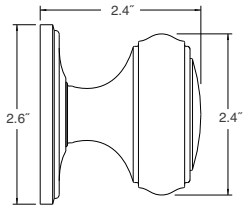

Item #	Description	Wt.	003, 031, 033, 050, 060, 102, 112, 150, 151, 190, 260 264	044, 055, 056, 402, 452
5068.xxx.MR	Minus Roses – pair	1.1	$206	$230
5068.xxx.IMR	Individual Minus Rose – half pair	0.55	$103	$116
5068.xxx.MRPN	Minus Roses – pair (PINNED)	2.3	$275	$311

5069 Knob
shown w/ 5076 Rose

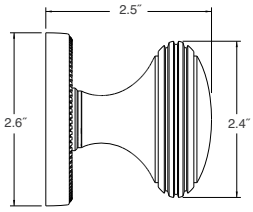

Item #	Description	Wt.	003, 031, 033, 050, 060, 102, 112, 150, 151, 190, 260 264	044, 055, 056, 402, 452
5069.xxx.MR	Minus Roses – pair	1.1	$206	$230
5069.xxx.IMR	Individual Minus Rose – half pair	0.55	$103	$116
5069.xxx.MRPN	Minus Roses – pair (PINNED)	1.1	$285	$311

5073 Knob
shown w/ 5006 Rose

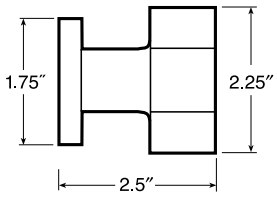

Item #	Description	Wt.	003, 031, 033, 050, 060, 102, 112, 150, 151, 190, 260 264	044, 055, 056, 402, 452
5073.xxx.MR	Minus Roses – pair	2.3	$194	$218
5073.xxx.IMR	Individual Minus Rose – half pair	1.2	$97	$109
5073.xxx.MRPN	Minus Roses – pair (PINNED)	2.3	$273	$297

5077 Bethpage® Knob
shown w/ R027 Bethpage Rose

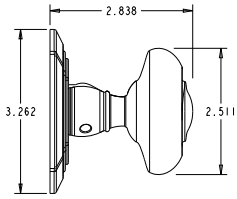

Item #	Description	Wt.	003, 031, 033, 050, 060, 102, 112, 150, 151, 190, 260 264	044, 055, 056, 402, 452
5077.xxx.MR	Minus Roses – pair	1.8	$158	$182
5077.xxx.IMR	Minus Rose – half pair	0.4	$79	$92

SOLID BRASS

5080 Filmore knob
shown w/ 5048 Rose

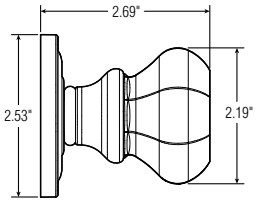

Item #	Description	Wt.	030, 102, 112, 140, 150, 260
5080.xxx.MR	Minus Roses – pair	1.2	$158
5080.xxx.IMR	Minus Rose – half pair	0.6	$79

For easy ordering, select finishes and functions of pre-configured tubular sets are available on page 13.

K002 Knob
shown w/ R003 Rose

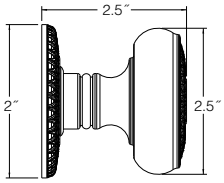

Item #	Description	Wt.	003, 031, 033, 050, 060, 102, 112, 150, 151, 190, 260 264	044, 055, 056, 402, 452
K002.xxx.MR	Minus Roses – pair	2.5	$356	$380
K002.xxx.IMR	Individual Minus Rose – half pair	1.5	$178	$191

K003 Knob
shown w/ 5076 Rose

Available while supplies last.

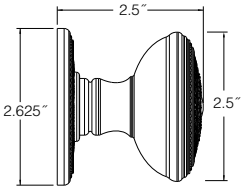

Item #	Description	Wt.	003, 031, 033, 050, 060, 102, 112, 150, 151, 190, 260 264	044, 055, 056, 402, 452
K003.xxx.MR	Minus Roses – pair	2.5	$356	$380
K003.xxx.IMR	Individual Minus Rose – half pair	1.5	$178	$191

K004 Knob
shown w/ R008 Rose

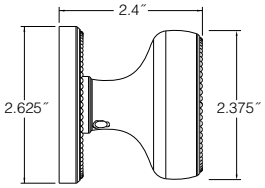

Item #	Description	Wt.	003, 031, 033, 050, 060, 102, 112, 150, 151, 190, 260 264	044, 055, 056, 402, 452
K004.xxx.MR	Minus Roses – pair	2.5	$356	$380
K004.xxx.IMR	Individual Minus Rose – half pair	1.5	$178	$191

K005 Knob
shown w/ R011 Rose

Available while supplies last.

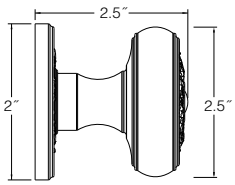

Item #	Description	Wt.	003, 031, 033, 050, 060, 102, 112, 150, 151, 190, 260 264	044, 055, 056, 402, 452
K005.xxx.MR	Minus Roses – pair	2.5	$356	$380
K005.xxx.IMR	Individual Minus Rose – half pair	1.5	$178	$191

K006 Knob
shown w/ R012 Rose

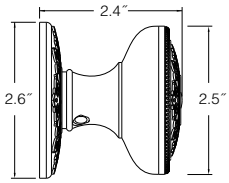

Item #	Description	Wt.	003, 031, 033, 050, 060, 102, 112, 150, 151, 190, 260 264	044, 055, 056, 402, 452
K006.xxx.MR	Minus Roses – pair	2.5	$356	$380
K006.xxx.IMR	Individual Minus Rose – half pair	1.5	$178	$191

K007, K008, K009 Hollywood Hills Knobs

Item #	Description	Wt.	003, 031, 033, 050, 060, 102, 112, 150, 151, 190, 260 264	044, 055, 056, 402, 452
K007.xxx.MR	Minus Roses – pair	2	$206	$218
K007.xxx.IMR	Individual Minus Rose – half pair	1.2	$103	$109
K008.xxx.MR	Minus Roses – pair	2.5	$218	$230
K008.xxx.IMR	Individual Minus Rose – half pair	1.5	$109	$116
K009.xxx.MR	Minus Roses – pair	3	$230	$242
K009.xxx.IMR	Individual Minus Rose – half pair	2	$116	$121

K007 Knob
shown w/ R050 Rose

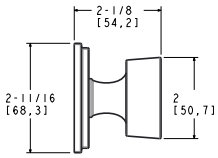

K007
2" Diameter

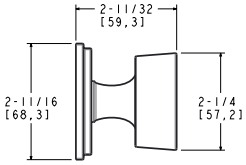

K008
2.25" Diameter

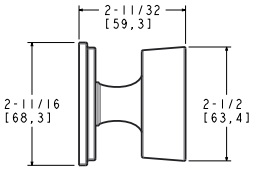

K009
2.5 " Diameter

SOLID BRASS

5101 Lever
shown w/ 5002 Rose

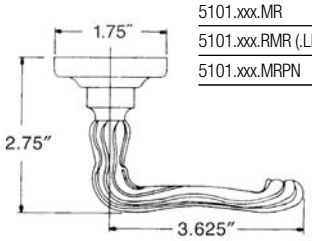

Item #	Description	Wt.	003, 031, 033, 050, 060, 102, 112, 150, 151, 190, 260 264	044, 055, 056, 402, 452
5101.xxx.MR	Minus Roses – pair	2.5	$194	$218
5101.xxx.RMR (.LMR)	Right (Left) Minus Rose – half pair	1.3	$97	$109
5101.xxx.MRPN	Minus Roses – pair (PINNED)	2.5	$263	$297

5103 Lever
shown w/ 5002 Rose

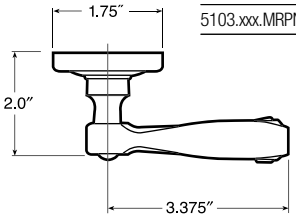

Item #	Description	Wt.	003, 031, 033, 050, 060, 102, 112, 150, 151, 190, 260 264	044, 055, 056, 402, 452
5103.xxx.MR	Minus Roses – pair	1.5	$194	$218
5103.xxx.RMR (.LMR)	Right (Left) Minus Rose – half pair	0.8	$97	$109
5103.xxx.MRPN	Minus Roses – pair (PINNED)	1.5	$258	$297

5104 Lever
shown w/ 5004 Rose

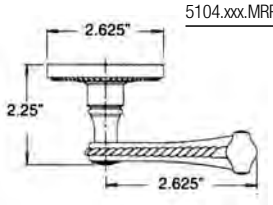

Item #	Description	Wt.	003, 031, 033, 050, 060, 102, 112, 150, 151, 190, 260 264	044, 055, 056, 402, 452
5104.xxx.MR	Minus Roses – pair	1.5	$194	$218
5104.xxx.RMR (.LMR)	Right (Left) Minus Rose – half pair	0.8	$97	$109
5104.xxx.MRPN	Minus Roses – pair (PINNED)	1.5	$263	$289

5105 Lever
shown w/ 5006 Rose

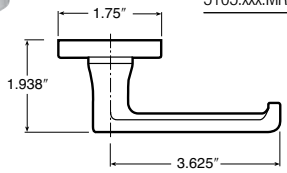

Item #	Description	Wt.	003, 031, 033, 050, 060, 102, 112, 150, 151, 190, 260 264	044, 055, 056, 402, 452
5105.xxx.MR	Minus Roses – pair	1.0	$194	$218
5105.xxx.RMR (.LMR)	Right (Left) Minus Rose – half pair	0.5	$97	$109
5105.xxx.MRPN	Minus Roses – pair (PINNED)	1.0	$273	$297

5106 Lever
shown w/ 5002 Rose

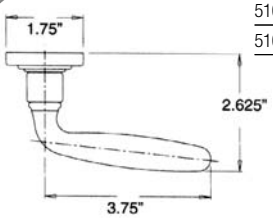

Item #	Description	Wt.	003, 031, 033, 050, 060, 102, 112, 150, 151, 190, 260 264	044, 055, 056, 402, 452
5106.xxx.MR	Minus Roses – pair	1.0	$194	$218
5106.xxx.RMR (.LMR)	Right (Left) Minus Rose – half pair	0.5	$97	$109
5106.xxx.MRPN	Minus Roses – pair (PINNED)	1.0	$273	$297

All Estate levers are ADA 4.13.9 Compliant

5107 Lever
shown w/ 5002 Rose

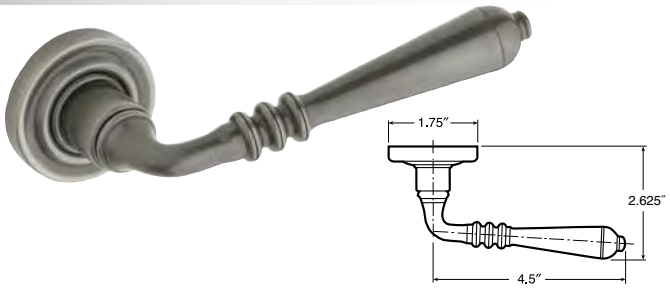

Item #	Description	Wt.	003, 031, 033, 050, 060, 102, 112, 150, 151, 190, 260 264	044, 055, 056, 402, 452
t5107.xxx.MR	Minus Roses – pair	1.2	$194	$218
5107.xxx.RMR (.LMR)	Right (Left) Minus Rose – half pair	0.6	$97	$109
5107.xxx.MRPN	Minus Roses – pair (PINNED)	1.2	$263	$297

5108 Lever
shown w/ 5002 Rose

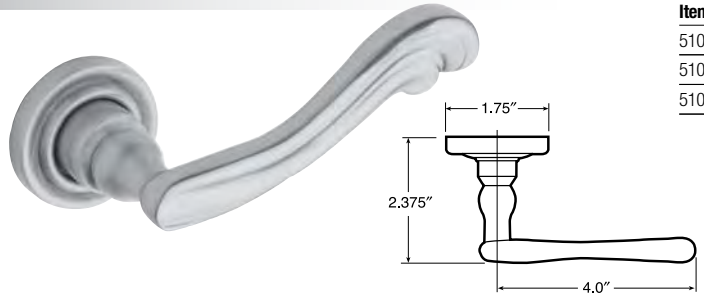

Item #	Description	Wt.	003, 031, 033, 050, 060, 102, 112, 150, 151, 190, 260 264	044, 055, 056, 402, 452
5108.xxx.MR	Minus Roses – pair	1.3	$194	$218
5108.xxx.RMR (.LMR)	Right (Left) Minus Rose – half pair	0.7	$97	$109
5108.xxx.MRPN	Minus Roses – pair (PINNED)	1.3	$273	$297

5112 Lever
shown w/ 5028 Rose

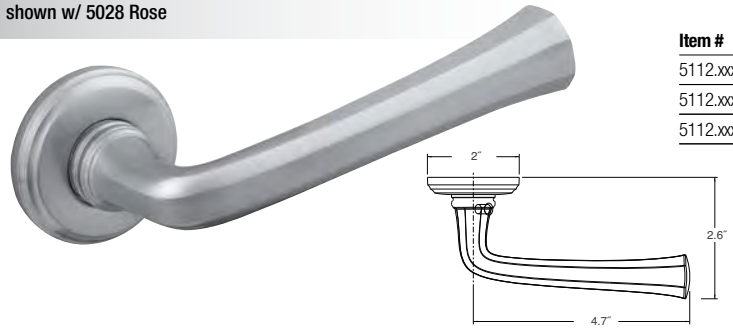

Item #	Description	Wt.	003, 031, 033, 050, 060, 102, 112, 150, 151, 190, 260 264	044, 055, 056, 402, 452
5112.xxx.MR	Minus Roses – pair	1.1	$206	$230
5112.xxx.RMR (.LMR)	Right (Left) Minus Rose – half pair	0.55	$103	$116
5112.xxx.MRPN	Minus Roses – pair (PINNED)	1.1	$285	$300

5113 Lever
shown w/ 5038 Rose

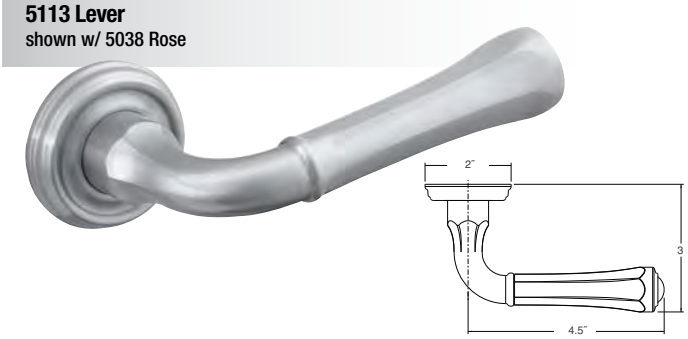

Item #	Description	Wt.	003, 031, 033, 050, 060, 102, 112, 150, 151, 190, 260 264	044, 055, 056, 402, 452
5113.xxx.MR	Minus Roses – pair	1.1	$206	$230
5113.xxx.RMR (.LMR)	Right (Left) Minus Rose – half pair	0.55	$103	$116
5113.xxx.MRPN	Minus Roses – pair (PINNED)	1.1	$275	$311

5116 Lever
shown w/ 5010 Rose

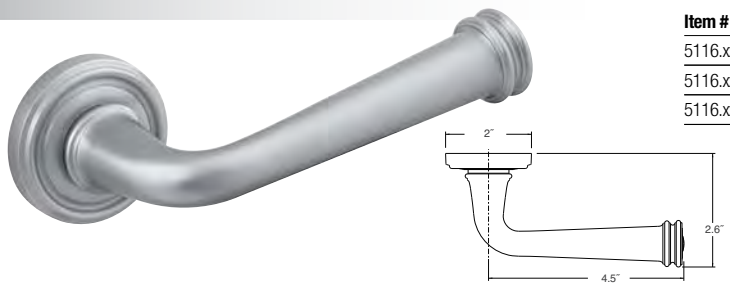

Item #	Description	Wt.	003, 031, 033, 050, 060, 102, 112, 150, 151, 190, 260 264	044, 055, 056, 402, 452
5116.xxx.MR	Minus Roses – pair	1.1	$206	$230
5116.xxx.RMR (.LMR)	Right (Left) Minus Rose – half pair	0.55	$103	$116
5116.xxx.MRPN	Minus Roses – pair (PINNED)	1.1	$285	$311

All Estate levers are ADA 4.13.9 Compliant

SOLID BRASS

5118 Lever
shown w/ 5035 Rose

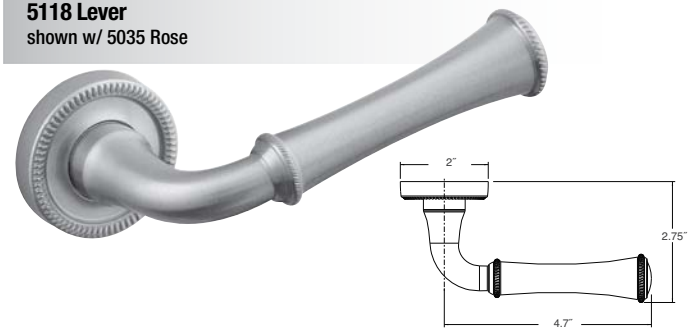

Item #	Description	Wt.	003, 031, 033, 050, 060, 102, 112, 150, 151, 190, 260 264	044, 055, 056, 402, 452
5118.xxx.MR	Minus Roses – pair	1.1	$206	$230
5118.xxx.RMR (.LMR)	Right (Left) Minus Rose – half pair	0.55	$103	$116
5118.xxx.MRPN	Minus Roses – pair (PINNED)	1.1	$275	$300

5121 Lever
shown w/ R011 Rose

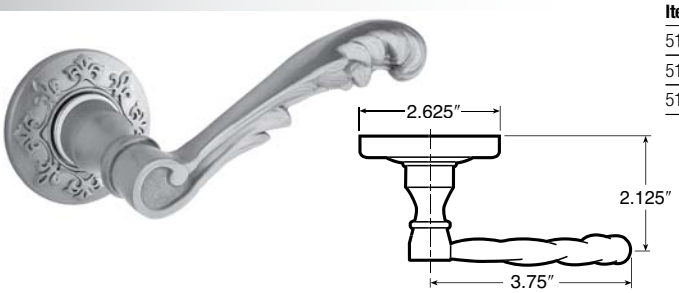

Item #	Description	Wt.	003, 031, 033, 050, 060, 102, 112, 150, 151, 190, 260 264	044, 055, 056, 402, 452
5121.xxx.MR	Minus Roses – pair	1.0	$194	$218
5121.xxx.RMR (.LMR)	Right (Left) Minus Rose – half pair	0.5	$97	$109
5121.xxx.MRPN	Minus Roses – pair (PINNED)	1.0	$263	$297

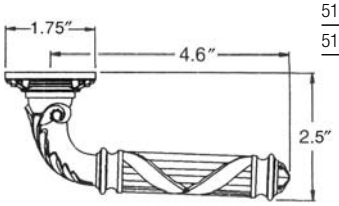

Item #	Description	Wt.	003, 031, 033, 050, 060, 102, 112, 150, 151, 190, 260 264	044, 055, 056, 402, 452
5122.xxx.MR	Minus Roses – pair	1.6	$194	$218
5122.xxx.RMR (.LMR)	Right (Left) Minus Rose – half pair	0.8	$97	$109
5122.xxx.MRPN	Minus Roses – pair (PINNED)	1.6	$273	$297

5125 Lever
shown w/ 5017 Rose

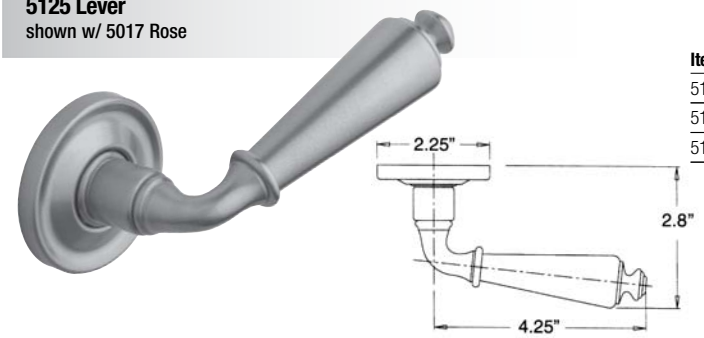

Item #	Description	Wt.	003, 031, 033, 050, 060, 102, 112, 150, 151, 190, 260 264	044, 055, 056
5125.xxx.MR	Minus Roses – pair	1.4	$194	$218
5125.xxx.RMR (.LMR)	Right (Left) Minus Rose – half pair	0.7	$97	$109
5125.xxx.MRPN	Minus Roses – pair (PINNED)	1.4	$263	$289

5132 Lever
shown w/ 5002 Rose

Available while supplies last.

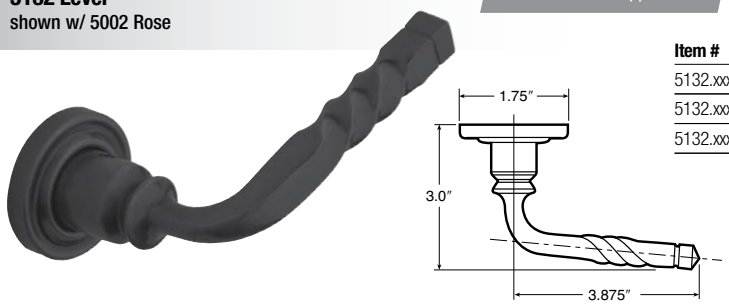

Item #	Description	Wt.	003, 031, 033, 050, 060, 102, 112, 150, 151, 190, 260 264	044, 055, 056, 402, 452
5132.xxx.MR	Minus Roses – pair	1.0	$194	$218
5132.xxx.RMR (.LMR)	Right (Left) Minus Rose – half pair	0.5	$97	$109
5132.xxx.MRPN	Minus Roses – pair (PINNED)	1.0	$273	$297

All Estate levers are ADA 4.13.9 Compliant

5137 Lever
shown w/ 5006 Rose

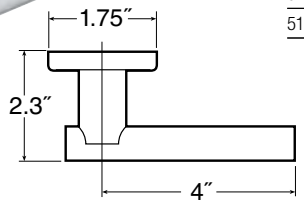

Item #	Description	Wt.	003, 031, 033, 050, 060, 102, 112, 150, 151, 190, 260 264	044, 055, 056
5137.xxx.MR	Minus Roses – pair	2.1	$194	$218
5137.xxx.RMR (.LMR)	Right (Left) Minus Rose – half pair	1.1	$97	$109
5137.xxx.MRPN	Minus Roses – pair (PINNED)	2.1	$263	$282

5138 Lever
shown w/ 5047 Rose

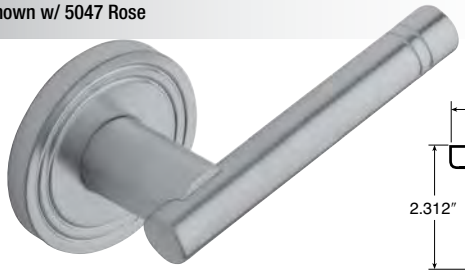

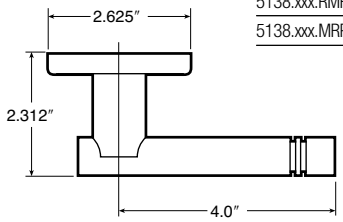

Item #	Description	Wt.	003, 031, 033, 050, 060, 102, 112, 150, 151, 190, 260 264	044, 055, 056
5138.xxx.MR	Minus Roses – pair	2.3	$194	$218
5138.xxx.RMR (.LMR)	Right (Left) Minus Rose – half pair	1.2	$97	$109
5138.xxx.MRPN	Minus Roses – pair (PINNED)	2.3	$273	$297

5141 Lever
shown w/ R033 Rose

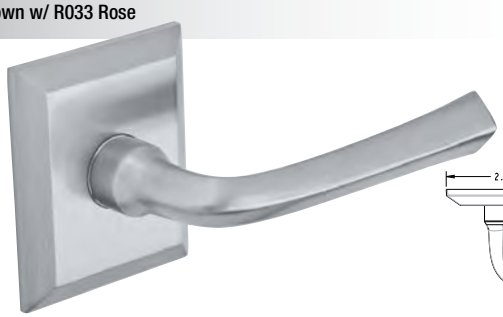

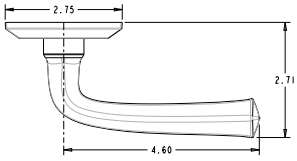

Item #	Description	Wt.	003, 031, 033, 050, 060, 102, 112, 150, 151, 190, 260 264	044, 055, 056, 402, 452
5141.xxx.MR	Minus Roses – pair	1.1	$206	$230
5141.xxx.RMR (.LMR)	Right (Left) Minus Rose – half pair	0.55	$103	$116
5141.xxx.MRPN	Minus Roses – pair (PINNED)	1.1	$275	$311

5152 Lever
shown w/ 5017 Rose

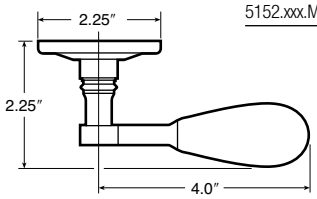

Item #	Description	Wt.	003, 031, 033, 050, 060, 102, 112, 150, 151, 190, 260 264	044, 055, 056, 402, 452
5152.xxx.MR	Minus Roses – pair	1.0	$194	$218
5162.xxx.RMR (.LMR)	Right (Left) Minus Rose – half pair	0.5	$97	$109
5152.xxx.MRPN	Minus Roses – pair (PINNED)	1.0	$263	$297

5161 Lever
shown w/ 5046 Rose

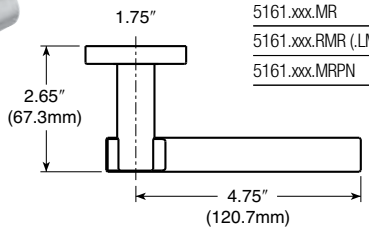

Item #	Description	Wt.	003, 031, 033, 050, 060, 102, 112, 150, 151, 190, 260 264	044, 055, 056
5161.xxx.MR	Minus Roses – pair	1.2	$194	$218
5161.xxx.RMR (.LMR)	Right (Left) Minus Rose – half pair	0.6	$97	$109
5161.xxx.MRPN	Minus Roses – pair (PINNED)	1.2	$263	$297

All Estate levers are ADA 4.13.9 Compliant

SOLID BRASS

5162 Lever
shown w/ 5032 Rose

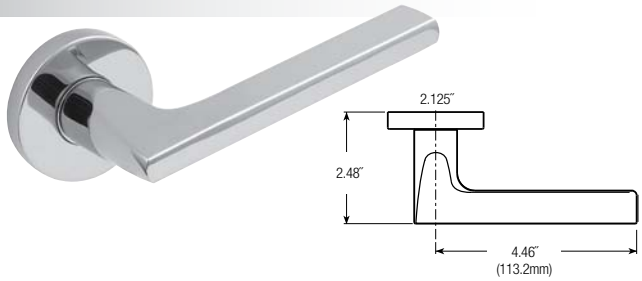

Item #	Description	Wt.	003, 031, 033, 050, 060, 102, 112, 150, 151, 190, 260 264	044, 055, 056, 402, 452
5162.xxx.MR	Minus Roses – pair	1.4	$194	$218
5162.xxx.RMR (.LMR)	Right (Left) Minus Rose – half pair	0.7	$97	$109
5162.xxx.MRPN	Minus Roses – pair (PINNED)	1.4	$273	$297

For easy ordering, select finishes and functions of pre-configured tubular sets are available on page 14.

5164 Lever
shown w/ 5006 Rose

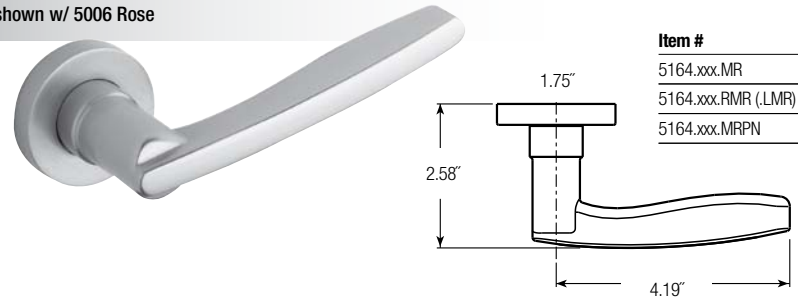

Item #	Description	Wt.	003, 031, 033, 050, 060, 102, 112, 150, 151, 190, 260 264	044, 055, 056, 402, 452
5164.xxx.MR	Minus Roses – pair	1.3	$194	$218
5164.xxx.RMR (.LMR)	Right (Left) Minus Rose – half pair	0.7	$97	$109
5164.xxx.MRPN	Minus Roses – pair (PINNED)	1.3	$273	$282

5165 Lever
shown w/ 5032 Rose

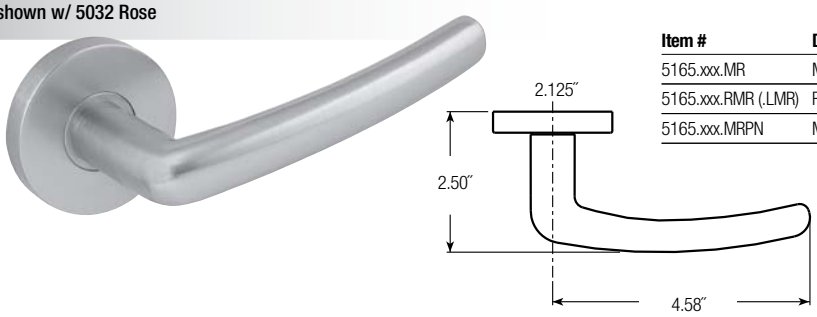

Item #	Description	Wt.	003, 031, 033, 050, 060, 102, 112, 150, 151, 190, 260 264	044, 055, 056, 402, 412, 452
5165.xxx.MR	Minus Roses – pair	1.2	$194	$218
5165.xxx.RMR (.LMR)	Right (Left) Minus Rose – half pair	0.6	$97	$109
5165.xxx.MRPN	Minus Roses – pair (PINNED)	1.2	$263	$297

5166 Lever
shown w/ 5006 Rose

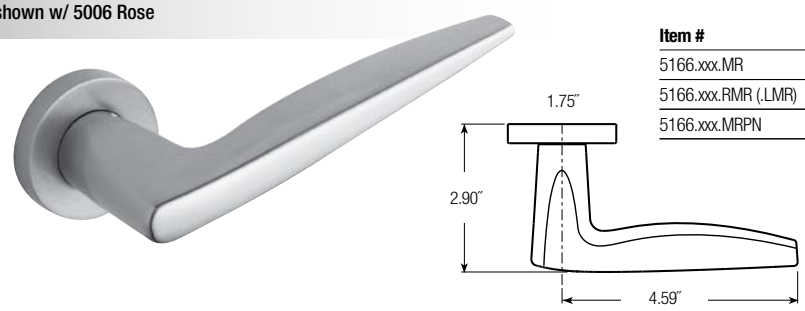

Item #	Description	Wt.	003, 031, 033, 050, 060, 102, 112, 150, 151, 190, 260 264	044, 055, 056, 402, 452
5166.xxx.MR	Minus Roses – pair	2.0	$194	$218
5166.xxx.RMR (.LMR)	Right (Left) Minus Rose – half pair	1.0	$97	$109
5166.xxx.MRPN	Minus Roses – pair (PINNED)	2.0	$263	$297

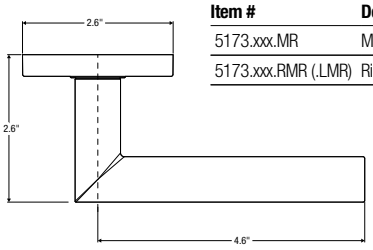

Item #	Description	Wt.	003, 031, 033, 050, 060, 102, 112, 150, 151, 190, 260 264	044, 055, 056, 402, 452
5173.xxx.MR	Minus Roses – pair	2.0	$194	$218
5173.xxx.RMR (.LMR)	Right (Left) Minus Rose – half pair	1.0	$97	$109

All Estate levers are ADA 4.13.9 Compliant

5190 Lever
shown w/ 5042 Rose

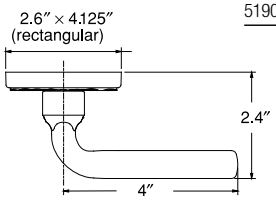

Item #	Description	Wt.	003, 031, 033, 050, 060, 102, 112, 150, 151, 190, 260 264	044, 055, 056, 402, 452
5190.xxx.MR	Minus Roses – pair	2.3	$194	$218
5190.xxx.RMR (.LMR)	Right (Left) Minus Rose – half pair	1.2	$97	$109
5190.xxx.MRPN	Minus Roses – pair (PINNED)	2.3	$263	$297

5440V Colonial Lever
shown w/ 5048 Rose

Item #	Description	Wt.	003, 031, 033, 050, 060, 102, 112, 150, 151, 190, 260 264	044, 055, 056, 402, 452
5440V.xxx.MR	Minus Roses – pair	-	$158	$182
5440V.xxx.RMR (.LMR)	Minus Roses – half pair	-	$79	$92

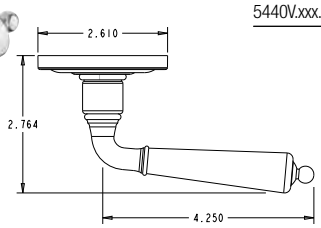

5445V Classic Lever
shown w/ 5048 Rose

Item #	Description	Wt.	003, 031, 033, 050, 060, 102, 112, 150, 151, 190, 260 264	044, 055, 056, 402, 452
5445V.xxx.MR	Minus Roses – pair	-	$158	$182
5445V.xxx.RMR (.LMR)	Minus Roses – half pair	-	$79	$92

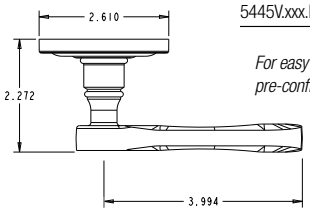

For easy ordering, select finishes and functions of pre-configured tubular sets are available on page 14.

5447V Bethpage® Lever
shown w/ R027 Bethpage Rose

Item #	Description	Wt.	003, 031, 033, 050, 060, 102, 112, 150, 151, 190, 260 264	044, 055, 056, 402, 452
5447V.xxx.MR	Minus Roses – pair	-	$158	$182
5447V.xxx.RMR (.LMR)	Minus Roses – half pair	-	$79	$92

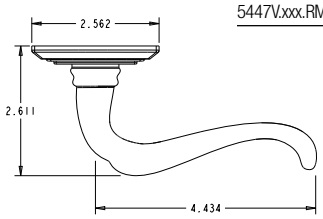

5452V Lever
shown w/ R030 Arch Rose

Item #	Description	Wt.	003, 031, 033, 050, 060, 102, 112, 150, 151, 190, 260 264	044, 055, 056, 402, 452
5452V.xxx.MR	Minus Roses – pair	-	$158	$182
5452V.xxx.RMR (.LMR)	Minus Roses – half pair	-	$79	$92

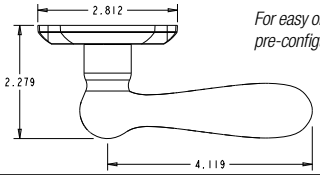

For easy ordering, select finishes and functions of pre-configured tubular sets are available on page 14.

All Estate levers are ADA 4.13.9 Compliant

SOLID BRASS

5455V Wave Lever
shown w/ 5048 Rose

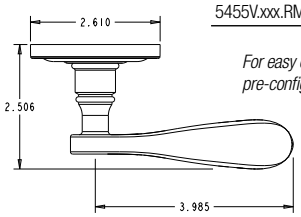

Item #	Description	Wt.	003, 031, 033, 050, 060, 102, 112, 150, 151, 190, 260 264	044, 055, 056, 402, 452
5455V.xxx.MR	Minus Roses – pair	-	$158	$182
5455V.xxx.RMR (.LMR)	Minus Roses – half pair	-	$79	$92

For easy ordering, select finishes and functions of pre-configured tubular sets are available on page 14.

5460V Contemporary Lever
shown w/ 5046 Rose

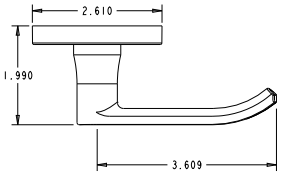

Item #	Description	Wt.	003, 031, 033, 050, 060, 102, 112, 150, 151, 190, 260 264	044, 055, 056, 402, 452
5460V.xxx.MR	Minus Roses – pair	-	$158	$182
5460V.xxx.RMR (.LMR)	Minus Roses – half pair	-	$79	$92

5485V Soho® Lever
shown w/ R026 Soho Rose

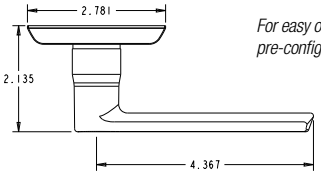

Item #	Description	Wt.	003, 031, 033, 050, 060, 102, 112, 150, 151, 190, 260 264	044, 055, 056, 402, 452
5485V.xxx.MR	Minus Roses – pair	-	$158	$182
5485V.xxx.RMR (.LMR)	Minus Roses – half pair	-	$79	$92

For easy ordering, select finishes and functions of pre-configured tubular sets are available on page 14.

L002 Lever
shown w/ R003 Rose

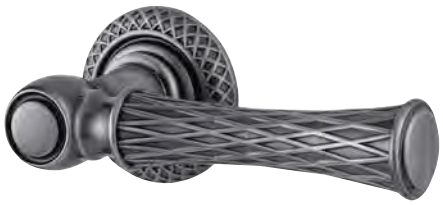

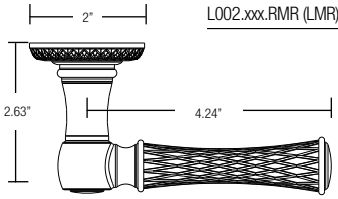

Item #	Description	Wt.	031, 033, 050 060, 102, 112 140, 150, 151 190, 260 264	402, 452
L002.xxx.MR	Minus Roses – pair	1 .4	$649	$674
L002.xxx.RMR (LMR)	Right (Left) Minus Rose – half pair	0.7	$325	$337

L004 Lever
shown w/ R007 Rose

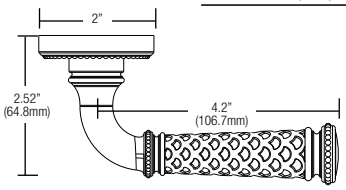

Item #	Description	Wt.	031, 033, 050, 060, 102, 112, 140, 150, 151, 190, 260 264	402, 452
L004.xxx.MR	Minus Roses – pair	1 .4	$649	$674
L004.xxx.RMR (LMR)	Right (Left) Minus Rose – half pair	0.7	$325	$337

http://formartists.com/work/samuel-burgess-johnson/

All Estate levers are ADA 4.13.9 Compliant

L006 Lever
shown w/ R011 Rose

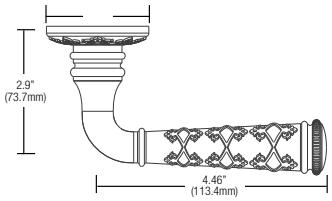

Item #	Description	Wt.	031, 033, 050, 060, 102, 112, 140, 150, 151, 190, 260 264	402, 452
L006.xxx.MR	Minus Roses – pair	1 .4	$649	$674
L006.xxx.RMR (LMR)	Right (Left) Minus Rose – half pair	0.7	$325	$337

L015 Lever
shown w/ R018 Rose

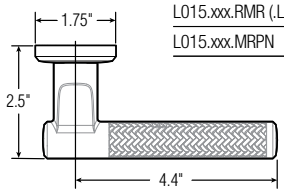

Item #	Description	Wt.	003, 031, 033, 050, 060, 102, 112, 150, 151, 190, 260 264	044, 055, 056, 402, 452
L015.xxx.MR	Minus Roses – pair	-	$194	$218
L015.xxx.RMR (.LMR)	Right (Left) Minus Rose – half pair	-	$97	$109
L015.xxx.MRPN	Minus Roses - pair (PINNED)	-	$273	$297

L016 Lever
shown w/ 5046 Rose

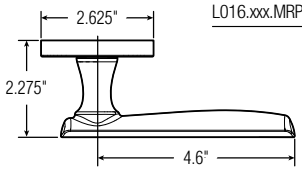

Item #	Description	Wt.	003, 031, 033, 050, 060, 102, 112, 150, 151, 190, 260 264	044, 055, 056, 402, 452
L016.xxx.MR	Minus Roses – pair	-	$194	$218
L016.xxx.RMR (.LMR)	Right (Left) Minus Rose – half pair	-	$97	$109
L016.xxx.MRPN	Minus Roses - pair (PINNED)	-	$273	$297

L018 Lever

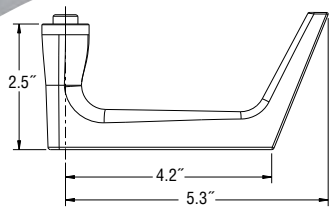

Item #	Description	Wt.	003, 031, 033, 050, 060, 102, 112, 150, 151, 190, 260 264	044, 055, 056, 402, 452
L018.xxx.MR	Minus Roses – pair	-	$194	$218
L018.xxx.RMR (.LMR)	Right (Left) Minus Rose – half pair	-	$97	$109
L018.xxx.MRPN	Minus Roses - pair (PINNED)	-	$273	$289

NOTE > When using lever with Multi-point trims, please use L018.xxx.MPMR/ L018.xxx.MPRMR (.MPLMR)

> When using levers with trims thickness "G" through "J" (trim thicknesses of 0.375" or thicker), please use L018.xxx.TMR/ L018.xxx.TRMR (.TLMR)

L020 Lever
shown w/ 5032 Rose

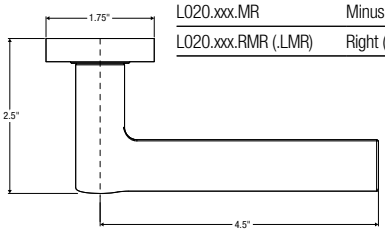

Item #	Description	Wt.	003, 031, 033, 050, 060, 102, 112, 150, 151, 190, 260 264	044, 055, 056, 402, 452
L020.xxx.MR	Minus Roses – pair	-	$194	$218
L020.xxx.RMR (.LMR)	Right (Left) Minus Rose – half pair	-	$97	$109

All Estate levers are ADA 4.13.9 Compliant

SOLID BRASS

L021 Lever
shown w/ 5056 Rose

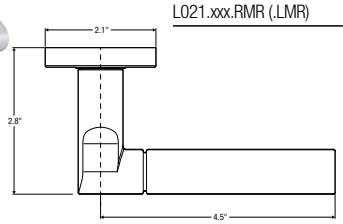

Item #	Description	Wt.	003, 031, 033, 050, 060, 102, 112, 150, 151, 190, 260 264	044, 055, 056, 402, 452
L021.xxx.MR	Minus Roses – pair	-	$194	$218
L021.xxx.RMR (.LMR)	Right (Left) Minus Rose – half pair	-	$97	$109

L022 Lever
shown w/ 5056 Rose

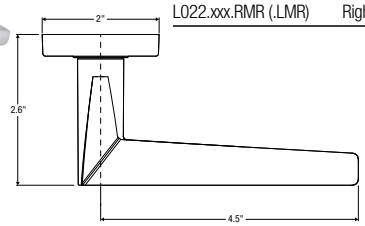

Item #	Description	Wt.	003, 031, 033, 050, 060, 102, 112, 150, 151, 190, 260 264	044, 055, 056, 402, 452
L022.xxx.MR	Minus Roses – pair	-	$194	$218
L022.xxx.RMR (.LMR)	Right (Left) Minus Rose – half pair	-	$97	$109

L023 Lever
shown w/ R017 Rose

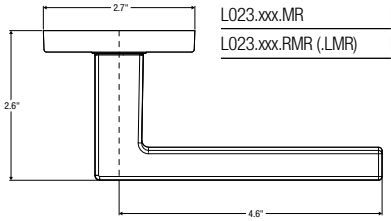

Item #	Description	Wt.	003, 031, 033, 050, 060, 102, 112, 150, 151, 190, 260 264	044, 055, 056, 402, 452
L023.xxx.MR	Minus Roses – pair	-	$206	$230
L023.xxx.RMR (.LMR)	Right (Left) Minus Rose – half pair	-	$103	$116

L024 Lever
shown w/ R046 Rose

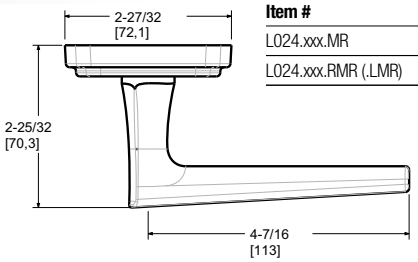

Item #	Description	Wt.	003, 031, 033, 050, 060, 102, 112, 150, 151, 190, 260 264	044, 055, 056, 402, 452
L024.xxx.MR	Minus Roses – pair	-	$194	$218
L024.xxx.RMR (.LMR)	Right (Left) Minus Rose – half pair	-	$97	$109

L025 Lever
shown w/ R045 Rose

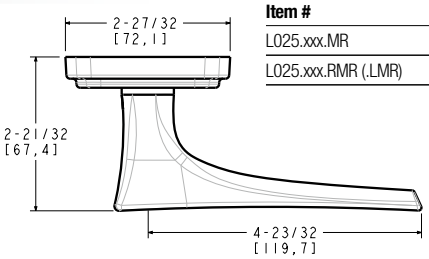

Item #	Description	Wt.	003, 031, 033, 050, 060, 102, 112, 150, 151, 190, 260 264	044, 055, 056, 402, 452
L025.xxx.MR	Minus Roses – pair	-	$194	$218
L025.xxx.RMR (.LMR)	Right (Left) Minus Rose – half pair	-	$97	$109

All Estate levers are ADA 4.13.9 Compliant

L029 Lever
shown w/ R017 Rose

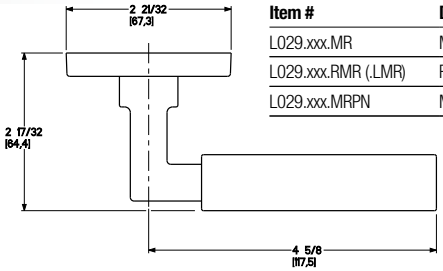

Item #	Description	Wt.	003, 031, 033, 050, 060, 102, 112, 150, 151, 190, 260 264	044, 055, 056, 402, 452
L029.xxx.MR	Minus Roses – pair	-	$194	$218
L029.xxx.RMR (.LMR)	Right (Left) Minus Rose – half pair	-	$97	$109
L029.xxx.MRPN	Minus Roses - pair (PINNED)	-	$273	$297

All Estate levers are ADA 4.13.9 Compliant

SOLID BRASS

5002, 5017, 5048, 5148 Rosettes

Item #	Description	Wt.	003, 031, 033, 050, 060, 102, 112, 150, 151, 190, 260 264	044, 055, 056, 402, 452
5002.xxx	1.75″ Passage – pair	0.2	$60	$66
5002.xxx.FD	1.75″ Dummy – pair	0.2	$60	$66
5002.xxx.l	1.75″ Passage – half pair	0.1	$30	$33
5002.xxx..lDM	1.75″ Dummy – half pair	0.1	$30	$33
5017.xxx	2.25″ Passage – pair	0.4	$66	$74
5017.xxx.FD	2.25″ Dummy – pair	0.4	$66	$74
5017.xxx.l	2.25″ Passage – half pair	0.2	$33	$37
5017.xxx.lDM	2.25″ Dummy – half pair	0.2	$33	$37
5048.xxx	2.625″ Passage – pair	0.8	$74	$81
5048.xxx.FD	2.625″ Dummy – pair	0.8	$74	$81
5048.xxx.l	2.625″ Passage – half pair	0.4	$37	$40
5048.xxx.lDM	2.625″ Dummy – half pair	0.4	$37	$40
5148.xxx	2.625″ Privacy – pair*	0.8	$74	$81
5148.xxx.l	2.625″ Privacy – half pair*	0.4	$37	$40

5003 Rosette

Item #	Description	Wt.	003, 031, 033, 050, 060, 102, 112, 150, 151, 190, 260 264	044, 055, 056, 402, 452
5003.xxx	2″ Passage – pair	0.4	$74	$81
5003.xxx.FD	2″ Dummy – pair	0.4	$74	$81
5003.xxx.l	2″ Passage – half pair	0.2	$37	$40
5003.xxx.lDM	2″ Dummy – half pair	0.2	$37	$40

5004, 5149 Rosette

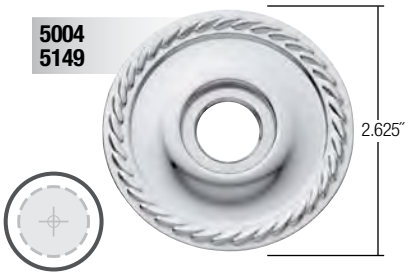

Item #	Description	Wt.	003, 031, 033, 050, 060, 102, 112, 150, 151, 190, 260 264	044, 055, 056, 402, 452
5004.xxx	2.625″ Passage – pair	0.8	$74	$84
5004.xxx.FD	2.625″ Dummy – pair	0.8	$74	$84
5004.xxx.l	2.625″ Passage – half pair	0.4	$37	$42
5004.xxx.lDM	2.625″ Dummy – half pair	0.4	$37	$42
5149.xxx	2.625″ Privacy – pair*	0.8	$74	$84
5149.xxx.l	2.625″ Privacy – half pair*	0.4	$37	$42

*2.625" diameter or larger privacy roses do NOT include 5097 Active backplates.

**Rose covers 2.125" hole on pre-bored door.

5006, 5032, 5046, 5139, 5146 Rosettes

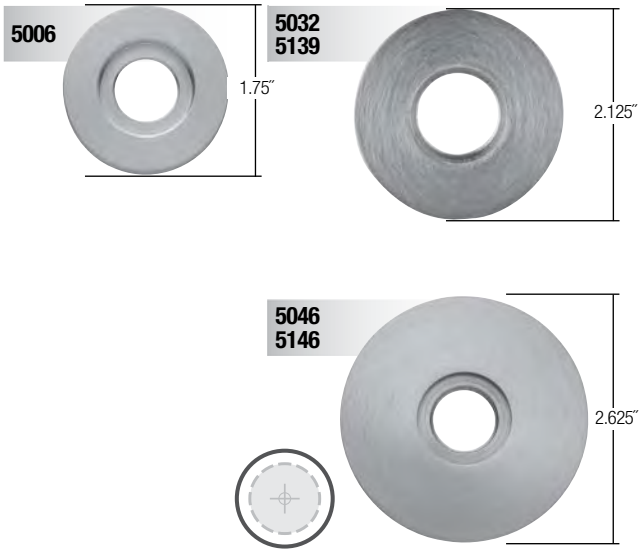

Item #	Description	Wt.	003, 031, 033, 050, 060, 102, 112, 150, 151, 190, 260 264	044, 055, 056, 402, 452
5006.xxx	1.75″ Passage – pair	0.3	$60	$66
5006.xxx.FD	1.75″ Dummy – pair	0.3	$60	$66
5006.xxx.I	1.75″ Passage – half pair	0.15	$30	$33
5006.xxx.IDM	1.75″ Passage – half pair	0.15	$30	$33
5032.xxx	2.125″ Passage – pair	0.4	$66	$74
5032.xxx.FD	2.125″ Dummy – pair	0.4	$66	$74
5032.xxx.I	2.125″ Passage – half pair	0.2	$33	$37
5032.xxx.IDM	2.125″ Dummy – half pair	0.2	$33	$37
5139.xxx	2.125″ Privacy – pair	0.4	$66	$79
5139.xxx.I	2.125″ Privacy – half pair	0.2	$33	$39
5046.xxx	2.625″ Passage – pair	0.8	$74	$81
5046.xxx.FD	2.625″ Dummy – pair	0.8	$74	$81
5046.xxx.I	2.625″ Passage – half pair	0.4	$37	$40
5046.xxx.IDM	2.625″ Dummy – half pair	0.4	$37	$40
5146.xxx	2.625″ Privacy – pair*	0.8	$74	$81
5146.xxx.I	2.625″ Privacy – half pair*	0.4	$37	$40

5010, 5070, 5123, 5151 Rosettes

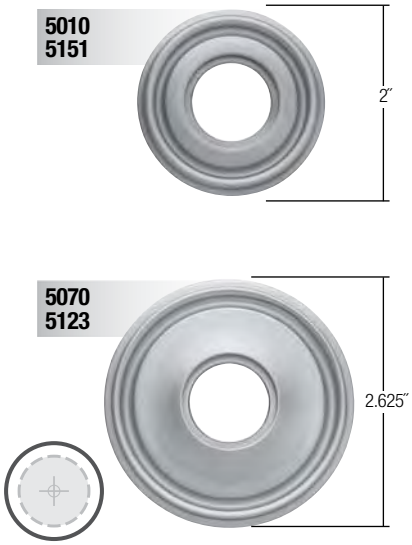

Item #	Description	Wt.	003, 031, 033, 050, 060, 102, 112, 150, 151, 190, 260 264	044, 055, 056, 402, 452
5010.xxx	2″ Passage – pair	0.4	$74	$81
5010.xxx.FD	2″ Dummy – pair	0.4	$74	$81
5010.xxx.I	2″ Passage – half pair	0.2	$37	$40
5010.xxx.IDM	2″ Dummy – half pair	0.2	$37	$40
5151.xxx	2″ Privacy – pair	0.4	$74	$81
5151.xxx.I	2″ Privacy – half pair	0.2	$37	$40
5070.xxx	2.625″ Passage – pair	0.8	$74	$84
5070.xxx.FD	2.625″ Dummy – pair	0.8	$74	$84
5070.xxx.I	2.625″ Passage – half pair	0.4	$37	$42
5070.xxx.IDM	2.625″ Dummy – half pair	0.4	$37	$42
5123.xxx	2.625″ Privacy – pair*	0.8	$74	$84
5123.xxx.I	2.625″ Privacy – half pair*	0.4	$37	$42

*2.625" diameter or larger privacy roses do NOT include 5097 Active backplates.

**Rose covers 2.125" hole on pre-bored door.

SOLID BRASS

5021, 5016, 5145 Rosettes

Item #	Description	Wt.	003, 031, 033, 050, 060, 102, 112, 150, 151, 190, 260 264	044, 055, 056, 402, 452
5016.xxx	1.75″ Passage – pair	0.3	$60	$66
5016.xxx.FD	1.75″ Dummy – pair	0.3	$60	$66
5016.xxx.I	1.75″ Passage – half pair	0.2	$30	$33
5016.xxx.IDM	1.75″ Dummy – half pair	0.2	$30	$33
5021.xxx	2.625″ Passage – pair	0.8	$74	$84
5021.xxx .FD	2.625″ Dummy – pair	0.8	$74	$84
5021.xxx.I	2.625″ Passage – half pair	0.4	$37	$42
5021.xxx.IDM	2.625″ Dummy – half pair	0.4	$37	$42
5145.xxx	2.625″ Privacy – pair*	0.8	$74	$84
5145.xxx.I	2.625″ Privacy – half pair*	0.4	$37	$42

5019, 5119 Rosettes

Available while supplies last.

Item #	Description	Wt.	003, 031, 033, 050, 060, 102, 112, 150, 151, 190, 260 264	044, 055, 056, 402, 452
5019.xxx	2.625″ Passage – pair	0.5	$74	$84
5019.xxx.FD	2.625″ Dummy – pair	0.5	$74	$84
5019.xxx.I	2.625″ Passage – half pair	0.3	$37	$42
5019.xxx.IDM	2.625″ Dummy – half pair	0.3	$37	$42
5119.xxx	2.625″ Privacy – pair*	0.5	$74	$84
5119.xxx.I	2.625″ Privacy – half pair*	0.3	$37	$42

5053, 5062, 5153 Rosettes

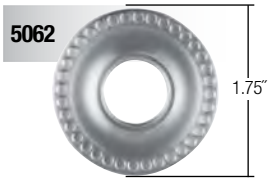

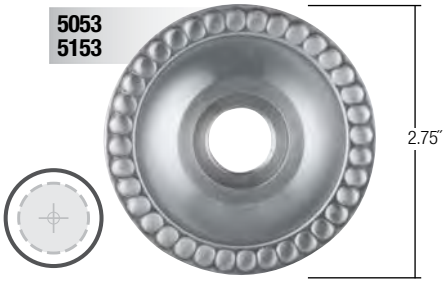

Item #	Description	Wt.	003, 031, 033, 050, 060, 102, 112, 150, 151, 190, 260 264	044, 055, 056, 402, 452
5062.xxx	1.75″ Passage – pair	0.2	$60	$66
5062.xxx.FD	1.75″ Dummy – pair	0.2	$60	$66
5062.xxx.I	1.75″ Passage – half pair	0.1	$30	$33
5062.xxx.IDM	1.75″ Dummy – half pair	0.1	$30	$33
5053.xxx	2.625″ Passage – pair	0.8	$74	$84
5053.xxx.FD	2.625″ Dummy – pair	0.8	$74	$84
5053.xxx.I	2.625″ Passage – half pair	0.4	$37	$42
5053.xxx.IDM	2.625″ Dummy – half pair	0.4	$37	$42
5153.xxx	2.625″ Privacy – pair*	0.8	$74	$84
5153.xxx.I	2.625″ Privacy – half pair*	0.4	$37	$42

*2.625" diameter or larger privacy roses do NOT include 5097 Active backplates.

**Rose covers 2.125" hole on pre-bored door.

5028, 5075, 5127, 5155 Rosettes

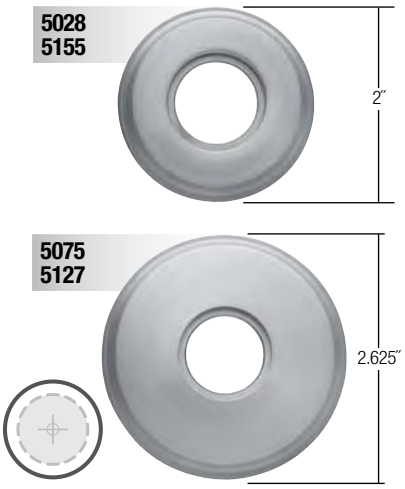

Item #	Description	Wt.	003, 031, 033, 050, 060, 102, 112, 150, 151, 190, 260 264	044, 055, 056, 402, 452
5028.xxx	2″ Passage – pair	0.4	$74	$81
5028.xxx.FD	2″ Dummy – pair	0.4	$74	$81
5028.xxx.I	2″ Passage – half pair	0.2	$37	$40
5028.xxx.IDM	2″ Dummy – half pair	0.2	$37	$40
5155.xxx	2″ Privacy – pair	0.4	$74	$81
5155.xxx.I	2″ Privacy – half pair	0.2	$37	$40
5075.xxx	2.625″ Passage – pair	0.8	$74	$84
5075.xxx.FD	2.625″ Dummy – pair	0.8	$74	$84
5075.xxx.I	2.625″ Passage – half pair	0.4	$37	$42
5075.xxx.IDM	2.625″ Dummy – half pair	0.4	$37	$42
5127.xxx	2.625″ Privacy – pair*	0.8	$74	$84
5127.xxx.I	2.625″ Privacy – half pair*	0.4	$37	$42

5035, 5076, 5129, 5156 Rosettes

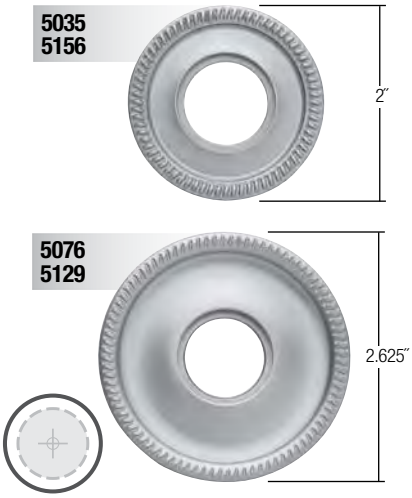

Item #	Description	Wt.	003, 031, 033, 050, 060, 102, 112, 150, 151, 190, 260 264	044, 055, 056, 402, 452
5035.xxx	2″ Passage – pair	0.4	$74	$81
5035.xxx.FD	2″ Dummy – pair	0.4	$74	$81
5035.xxx.I	2″ Passage – half pair	0.2	$37	$40
5035.xxx.IDM	2″ Dummy – half pair	0.2	$37	$40
5156.xxx	2″ Privacy – pair	0.4	$74	$81
5156.xxx.I	2″ Privacy – half pair	0.2	$37	$40
5076..xxx	2.625″ Passage – pair	0.8	$74	$84
5076.xxx.FD	2.625″ Dummy – pair	0.8	$74	$84
5076.xxx.I	2.625″ Passage – half pair	0.4	$37	$42
5076.xxx.IDM	2.625″ Dummy – half pair	0.4	$37	$42
5129.xxx	2.625″ Privacy – pair*	0.8	$74	$84
5129.xxx.I	2.625″ Privacy – half pair*	0.4	$37	$42

5038, 5078, 5134, 5157 Rosettes

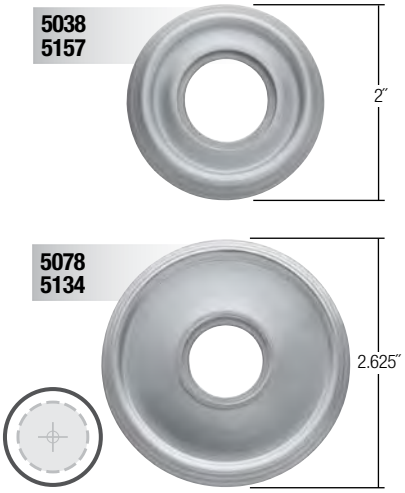

Item #	Description	Wt.	003, 031, 033, 050, 060, 102, 112, 150, 151, 190, 260 264	044, 055, 056, 402, 452
5038.xxx	2″ Passage – pair	0.4	$74	$81
5038.xxx.FD	2″ Dummy – pair	0.4	$74	$81
5038.xxx.I	2″ Passage – half pair	0.2	$37	$40
5038.xxx.IDM	2″ Dummy – half pair	0.2	$37	$40
5157.xxx	2″ Privacy – pair	0.4	$74	$81
5157.xxx.I	2″ Privacy – half pair	0.2	$37	$40
5078..xxx	2.625″ Passage – pair	0.8	$74	$84
5078.xxx.FD	2.625″ Dummy – pair	0.8	$74	$84
5078.xxx.I	2.625″ Passage – half pair	0.4	$37	$42
5078.xxx.IDM	2.625″ Dummy – half pair	0.4	$37	$42
5134.xxx	2.625″ Privacy – pair*	0.8	$74	$84
5134.xxx.I	2.625″ Privacy – half pair*	0.4	$37	$42

*2.625" diameter or larger privacy roses do NOT include 5097 Active backplates.

**Rose covers 2.125" hole on pre-bored door.

SOLID BRASS

5042, 5142 Rosettes

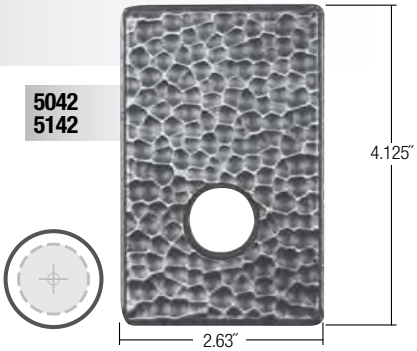

Item #	Description	Wt.	003, 031, 033, 050, 060, 102, 112, 150, 151, 190, 260, 264	044, 402, 452
5042.xxx	2.63″ x 4.125″ Passage – pair	1.0	$74	$81
5042.xxx.FD	2.63″ x 4.125″ Dummy – pair	1.0	$74	$81
5042.xxx.I	2.63″ x 4.125″ Passage – half pair	0.5	$37	$40
5042.xxx.IDM	2.63″ x 4.125″ Dummy – half pair	0.5	$37	$40
5142.xxx	2.63″ x 4.125″ Privacy – pair*	1.0	$74	$81
5142.xxx.R (L)	2.63″ x 4.125″ Privacy – half pair*	0.5	$37	$40

5058, 5158 Rosettes

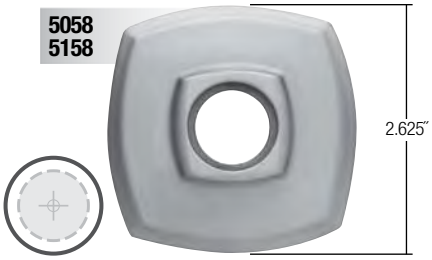

Item #	Description	Wt.	003, 031, 033, 050, 060, 102, 112, 150, 151, 190, 260, 264	044, 055, 056 402, 452
5058.xxx	2.625″ Passage – pair	0.8	$74	$81
5058.xxx.FD	2.625″ Dummy – pair	0.8	$74	$81
5058.xxx.I	2.625″ Passage – half pair	0.4	$37	$40
5058.xxx.IDM	2.625″ Dummy – half pair	0.4	$37	$40
5158.xxx	2.625″ Privacy – pair*	0.8	$74	$81
5158.xxx.I	2.625″ Privacy – half pair*	0.4	$37	$40

5047, 5147 Rosettes

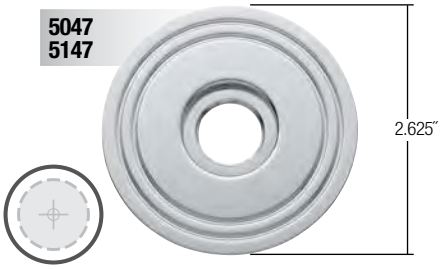

Item #	Description	Wt.	003, 031, 033, 050, 060, 102, 112, 150, 151, 190, 260, 264	044, 055, 056 402, 452
5047.xxx	2.625″ Passage – pair	0.8	$74	$81
5047.xxx.FD	2.625″ Dummy – pair	0.8	$74	$81
5047.xxx.I	2.625″ Passage – half pair	0.4	$37	$40
5047.xxx.IDM	2.625″ Dummy – half pair	0.4	$37	$40
5147.xxx	2.625″ Privacy – pair*	0.8	$74	$81
5147.xxx.I	2.625″ Privacy – half pair*	0.4	$37	$40

5056, 5160 Rosettes

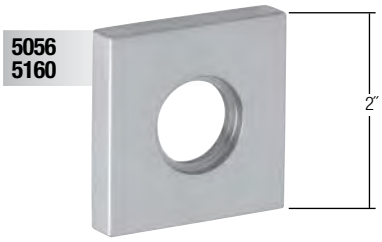

Item #	Description	Wt.	003, 031, 033, 050, 060, 102, 112, 150, 151, 190, 260, 264	044, 055, 056 402, 452
5056.xxx	2″ Passage – pair	0.8	$66	$74
5056.xxx.FD	2″ Dummy – pair	0.8	$66	$74
5056.xxx.I	2″ Passage – half pair	0.4	$33	$37
5056.xxx.IDM	2″ Dummy – half pair	0.4	$33	$37
5160.xxx	2″ Privacy – pair	0.8	$66	$74
5160.xxx.I	2″ Privacy – half pair	0.4	$33	$37

*2.625" diameter or larger privacy roses do NOT include 5097 Active backplates.

**Rose covers 2.125" hole on pre-bored door.

R003, R004 Rosettes

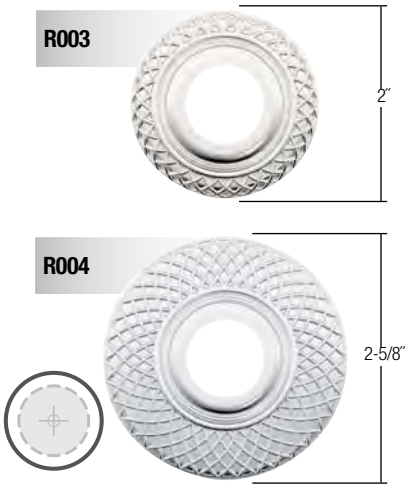

Item #	Description	Wt.	003, 031, 033, 050, 060, 102, 112, 150, 151, 190, 260, 264	044, 055, 056, 402, 452
R003.xxx.PS	2″ Passage – pair	0.5	$110	$124
R003.xxx.FD	2″ Dummy – pair	0.5	$110	$124
R003.xxx.PV	2″ Privacy – pair	0.5	$110	$124
R003.xxx.lPS	2″ Passage – half pair	0.3	$55	$62
R003.xxx.lDM	2″ Dummy – half pair	0.3	$55	$62
R003.xxx.lPV	2″ Privacy – half pair	0.3	$55	$62
R004.xxx.PS	2 5/8″ Passage – pair	0.5	$118	$126
R004.xxx.FD	2 5/8″ Dummy – pair	0.5	$118	$126
R004.xxx.PV	2 5/8″ Privacy – pair*	0.5	$118	$126
R004.xxx.lPS	2 5/8″ Passage – half pair	0.3	$60	$63
R004.xxx.lDM	2 5/8″ Dummy – half pair	0.3	$60	$63
R004.xxx.lPV	2 5/8″ Privacy – half pair*	0.3	$60	$63

R007, R008 Rosettes

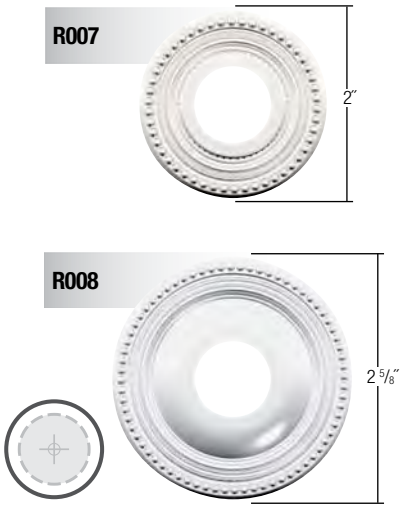

Item #	Description	Wt.	003, 031, 033, 050, 060, 102, 112, 150, 151, 190, 260, 264	044, 055, 056, 402, 452
R007.xxx.PS	2″ Passage – pair	0.5	$110	$124
R007.xxx.FD	2″ Dummy – pair	0.5	$110	$124
R007.xxx.PV	2″ Privacy – pair	0.5	$110	$124
R007.xxx.lPS	2″ Passage – half pair	0.3	$55	$62
R007.xxx.lDM	2″ Dummy – half pair	0.3	$55	$62
R007.xxx.lPV	2″ Privacy – half pair	0.3	$55	$62
R008.xxx.PS	2 5/8″ Passage – pair	0.5	$118	$126
R008.xxx.FD	2 5/8″ Dummy – pair	0.5	$118	$126
R008.xxx.PV	2 5/8″ Privacy – pair*	0.5	$118	$126
R008.xxx.lPS	2 5/8″ Passage – half pair	0.3	$60	$63
R008.xxx.lDM	2 5/8″ Dummy – half pair	0.3	$60	$63
R008.xxx.lPV	2 5/8″ Privacy – half pair*	0.3	$60	$63

R011, R012 Rosettes

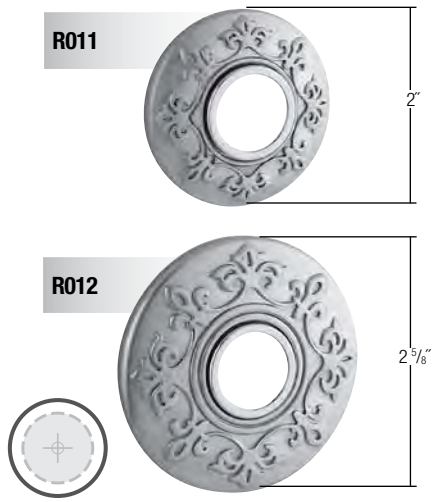

Item #	Description	Wt.	003, 031, 033, 050, 060, 102, 112, 150, 151, 190, 260, 264	044, 055, 056, 402, 452
R011.xxx.PS	2″ Passage – pair	0.5	$110	$124
R011.xxx.FD	2″ Dummy – pair	0.5	$110	$124
R011.xxx.PV	2″ Privacy – pair	0.5	$110	$124
R011.xxx.lPS	2″ Passage – half pair	0.3	$55	$62
R011.xxx.lDM	2″ Dummy – half pair	0.3	$55	$62
R011.xxx.lPV	2″ Privacy – half pair	0.3	$55	$62
R012.xxx.PS	2 5/8″ Passage – pair	0.5	$118	$126
R012.xxx.FD	2 5/8″ Dummy – pair	0.5	$118	$126
R012.xxx.PV	2 5/8″ Privacy – pair*	0.5	$118	$126
R012.xxx.lPS	2 5/8″ Passage – half pair	0.3	$60	$63
R012.xxx.lDM	2 5/8″ Dummy – half pair	0.3	$60	$63
R012.xxx.lPV	2 5/8″ Privacy – half pair*	0.3	$60	$63

*2.625" diameter or larger privacy roses do NOT include 5097 Active backplates.

**Rose covers 2.125" hole on pre-bored door.

SOLID BRASS

R016 Rosette

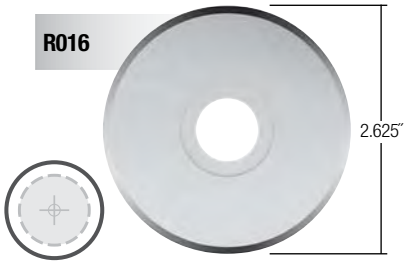

Item #	Description	Wt.	003, 031, 033, 050, 060, 102, 112, 150, 151, 190, 260, 264	044, 055, 056 402, 452
R016.xxx.PS	2.625″ Passage – pair	0.8	$74	$81
R016.xxx.FD	2.625″ Dummy – pair	0.8	$74	$81
R016.xxx.IPS	2.625″ Passage – half pair	0.4	$37	$40
R016.xxx.IDM	2.625″ Dummy – half pair	0.4	$37	$40
R016.xxx.PV	2.625″ Privacy – pair	0.8	$74	$81
R016.xxx.IPV	2.625″ Privacy – half pair	0.4	$37	$40

R017 Rosette

Item #	Description	Wt.	003, 031, 033, 050, 060, 102, 112, 150, 151, 190, 260, 264	044, 055, 056 402, 452
R017.xxx.PS	2.625″ Passage – pair	0.8	$74	$81
R017.xxx.FD	2.625″ Dummy – pair	0.8	$74	$81
R017.xxx.IPS	2.625″ Passage – half pair	0.4	$37	$40
R017.xxx.IDM	2.625″ Dummy – half pair	0.4	$37	$40
R017.xxx.PV	2.625″ Privacy – pair	0.8	$74	$81
R017.xxx.IPV	2.625″ Privacy – half pair	0.4	$37	$40

R026 Soho Rosette

Item #	Description	Wt.	003, 031, 033, 050, 060, 102, 112, 150, 151, 190, 260, 264	044, 055, 056 402, 452
R026.xxx.PS	3” Soho Passage - pair	0.8	$74	$81
R026.xxx.FD	3” Soho Dummy - pair	0.8	$74	$81
R026.xxx.IPS	3” Soho Passage - half pair	0.4	$37	$40
R026.xxx.IDM	3” Soho Dummy - half pair	0.4	$37	$40
R026.xxx.PV	3” Soho Privacy - pair	0.8	$74	$81
R026.xxx.IPV	3” Soho Privacy - half pair	0.4	$37	$40

*2.625” diameter or larger privacy roses do NOT include 5097 Active backplates.

**Rose covers 2.125” hole on pre-bored door.

R027 – R029 Bethpage Rosettes

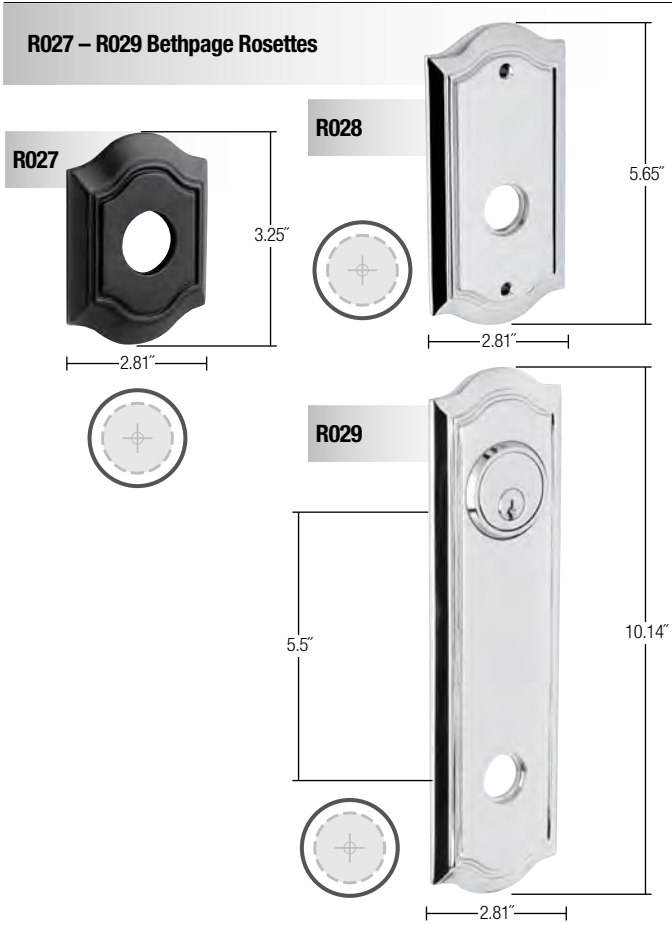

Item #	Description	003, 031, 033, 050, 060, 102, 112, 150, 151, 190, 260, 264	044, 055, 056, 402, 452
R027.xxx.PS	3.25″ Bethpage Passage - pair	$74	$81
R027.xxx.FD	3.25″ Bethpage Dummy - pair	$74	$81
R027.xxx.IPS	3.25″ Bethpage Passage - half pair	$37	$40
R027.xxx.IDM	3.25″ Bethpage Dummy - half pair	$37	$40
R027.xxx.PV	3.25″ Bethpage Privacy - pair	$74	$81
R027.xxx.IPV	3.25″ Bethpage Privacy - half pair	$37	$40
R028.xxx.PS	5.65″ Bethpage Passage - pair	$124	$130
R028.xxx.FD	5.65″ Bethpage Dummy - pair	$124	$130
R028.xxx.IPS	5.65″ Bethpage Passage - half pair	$62	$65
R028.xxx.IDM	5.65″ Bethpage Dummy - half pair	$62	$65
R028.xxx.PV	5.65″ Bethpage Privacy - pair	$124	$130
R028.xxx.RPV (.LPV)	5.65″ Bethpage Privacy - half pair	$62	$65
R029.xxx.PS	10.14″ Bethpage Passage - pair	$238	$262
R029.xxx.FD	10.14″ Bethpage Dummy - pair	$238	$262
R029.xxx.IPS	10.14″ Bethpage Passage - half pair	$119	$131
R029.xxx.IDM	10.14″ Bethpage Dummy - half pair	$119	$131
R029.xxx.PV	10.14″ Bethpage Privacy - pair	$238	$262
R029.xxx.RPV (.LPV)	10.14″ Bethpage Privacy - half pair	$119	$131
R029.xxx.ENTR	10.14″ Bethpage Entry Kit - pair	$411	$435
R029.xxx.EGRK	10.14″ Bethpage Entry Egress Kit - Knob Adaptor	$502	$526
R029.xxx.EGRL	10.14″ Bethpage Entry Egress Kit - Lever Adaptor	$502	$526

Entry/Non-Egress: Supports 1 ¾" doors. Includes cylinder and deadbolt latch. Must order desired knobs or levers and knob/lever passage latch along with 6502 or Spring Assist Adaptor separately.

Egress: Supports 1 ¾" doors. Includes cylinder, spindle, deadbolt latch, knob/lever latch, and egress cartridge. Must order desired knobs or levers separately. Spindle included with Egress kit will work from 1.75" to 2.25" Thick Doors. Must order 5399.xxx.C Thick Door Kit for doors 2" to 2.25" thick. Interior Egress roses do not match Interior Non-Egress or Dummy roses.

*2.625" diameter or larger privacy roses do NOT include 5097 Active backplates.

**Rose covers 2.125" hole on pre-bored door.

SOLID BRASS

R030 – R032 Arch Rosettes

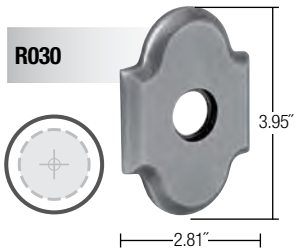

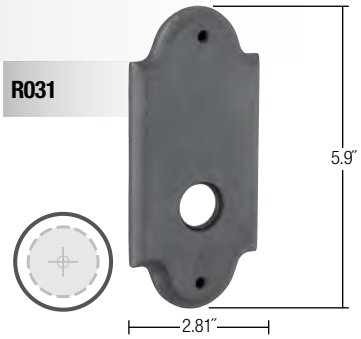

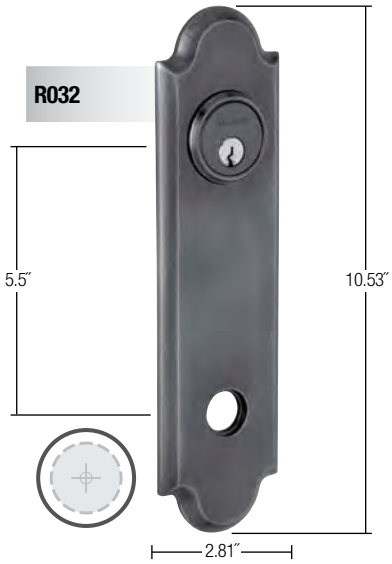

Item #	Description	003, 031, 033, 050, 060, 102, 112, 150, 151, 190, 260, 264	044, 055, 056, 402, 452
R030.xxx.PS	3.95″ Arch Passage - pair	$74	$81
R030.xxx.FD	3.95″ Arch Dummy - pair	$74	$81
R030.xxx.IPS	3.95″ Arch Passage - half pair	$37	$40
R030.xxx.IDM	3.95″ Arch Dummy - half pair	$37	$40
R030.xxx.PV	3.95″ Arch Privacy - pair	$74	$81
R030.xxx.IPV	3.95″ Arch Privacy - half pair	$37	$40
R031.xxx.PS	5.9″ Arch Passage - pair	$124	$130
R031.xxx.FD	5.9″ Arch Dummy - pair	$124	$130
R031.xxx.IPS	5.9″ Arch Passage - half pair	$62	$65
R031.xxx.IDM	5.9″ Arch Dummy - half pair	$62	$65
R031.xxx.PV	5.9″ Arch Privacy - pair	$124	$130
R031.xxx.RPV (.LPV)	5.9″ Arch Privacy - half pair	$62	$65
R032.xxx.PS	10.53″ Arch Passage - pair	$238	$262
R032.xxx.FD	10.53″ Arch Dummy - pair	$238	$262
R032.xxx.IPS	10.53″ Arch Passage - half pair	$119	$131
R032.xxx.IDM	10.53″ Arch Dummy - half pair	$119	$131
R032.xxx.PV	10.53″ Arch Privacy - pair	$238	$262
R032.xxx.RPV (.LPV)	10.53″ Arch Privacy - half pair	$119	$131
R032.xxx.ENTR	10.53″ Arch Entry Kit - pair	$411	$435
R032.xxx.EGRK	11.2″ Arch Entry Egress Kit - Knob Adaptor	$502	$526
R032.xxx.EGRL	11.2″ Arch Entry Egress Kit - Lever Adaptor	$502	$526

Entry/Non-Egress: Supports 1 ¾" doors. Includes cylinder and deadbolt latch. Must order desired knobs or levers and knob/lever passage latch along with 6502 or Spring Assist Adaptor separately.

Egress: Supports 1 ¾" doors. Includes cylinder, spindle, deadbolt latch, knob/lever latch, and egress cartridge. Must order desired knobs or levers separately. Spindle included with Egress kit will work from 1.75" to 2.25" Thick Doors. Must order 5399.xxx.C Thick Door Kit for doors 2" to 2.25" thick. Interior Egress roses do not match Interior Non-Egress or Dummy roses.

R033 – R035 Square Rosettes

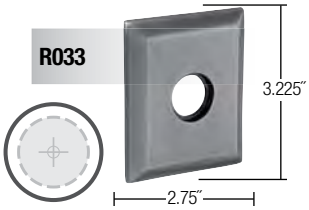

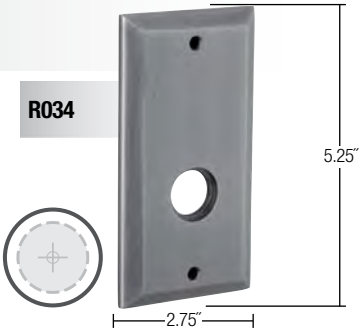

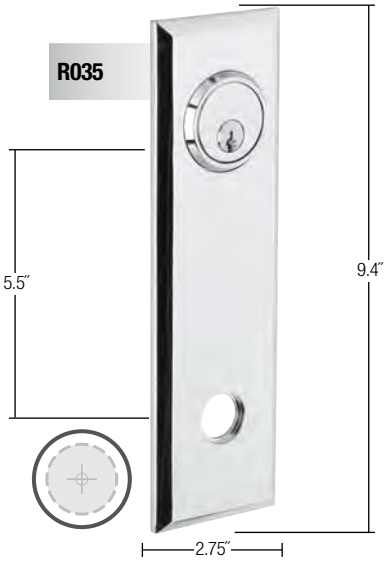

Item #	Description	003, 031, 033, 050, 060, 102, 112, 150, 151, 190, 260 264	044, 055, 056, 402, 452
R033.xxx.PS	3.225″ Square Passage - pair	$74	$81
R033.xxx.FD	3.225″ Square Dummy - pair	$74	$81
R033.xxx.IPS	3.225″ Square Passage - half pair	$37	$40
R033.xxx.IDM	3.225″ Square Dummy - half pair	$37	$40
R033.xxx.PV	3.225″ Square Privacy - pair	$74	$81
R033.xxx.IPV	3.225″ Square Privacy - half pair	$37	$40
R034.xxx.PS	5.25″ Square Passage - pair	$124	$130
R034.xxx.FD	5.25″ Square Dummy - pair	$124	$130
R034.xxx.IPS	5.25″ Square Passage - half pair	$62	$65
R034.xxx.IDM	5.25″ Square Dummy - half pair	$62	$65
R034.xxx.PV	5.25″ Square Privacy - pair	$124	$130
R034.xxx.RPV (.LPV)	5.25″ Square Privacy - half pair	$62	$65
R035.xxx.PS	9.4″ Square Passage - pair	$238	$262
R035.xxx.FD	9.4″ Square Dummy - pair	$238	$262
R035.xxx.IPS	9.4″ Square Passage - half pair	$119	$131
R035.xxx.IDM	9.4″ Square Dummy - half pair	$119	$131
R035.xxx.PV	9.4″ Square Privacy - pair	$238	$262
R035.xxx.RPV (.LPV)	9.4″ Square Privacy - half pair	$119	$131
R035.xxx.ENTR	9.4″ Square Entry Kit - pair	$411	$435
R035.xxx.EGRK	9.4″ Square Entry Egress Kit - Knob Adaptor	$502	$526
R035.xxx.EGRL	9.4″ Square Entry Egress Kit - Lever Adaptor	$502	$526

Entry/Non-Egress: Supports 1 ¾" doors. Includes cylinder and deadbolt latch. Must order desired knobs or levers and knob/lever passage latch along with 6502 or Spring Assist Adaptor separately.

Egress: Supports 1 ¾" doors. Includes cylinder, spindle, deadbolt latch, knob/lever latch, and egress cartridge. Must order desired knobs or levers separately. Spindle included with Egress kit will work from 1.75" to 2.25" Thick Doors. Must order 5399.xxx.C Thick Door Kit for doors 2" to 2.25" thick. Interior Egress roses do not match Interior Non-Egress or Dummy roses.

*2.625" diameter or larger privacy roses do NOT include 5097 Active backplates.

**Rose covers 2.125" hole on pre-bored door.

R036 – R038 Square Rope Rosettes

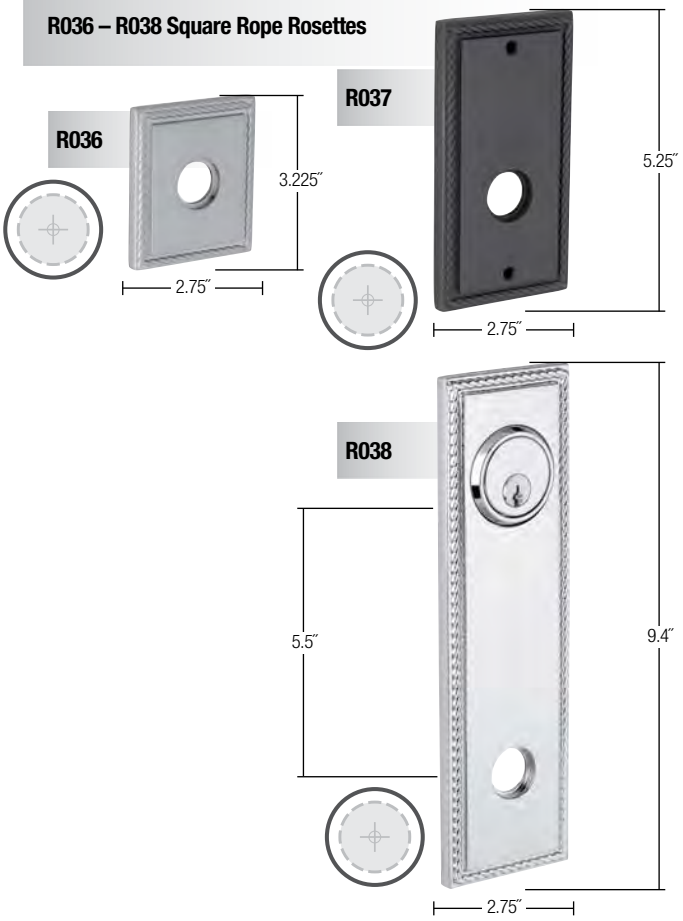

Item #	Description	031, 033, 050, 060, 102, 112, 150, 151, 190, 260, 264	044, 055, 056, 402, 452
R036.xxx.PS	3.225″ Square Rope Passage - pair	$74	$81
R036.xxx.FD	3.225″ Square Rope Dummy - pair	$74	$81
R036.xxx.lPS	3.225″ Square Rope Passage - half pair	$37	$40
R036.xxx.lDM	3.225″ Square Rope Dummy - half pair	$37	$40
R036.xxx.PV	3.225″ Square Rope Privacy - pair	$74	$81
R036.xxx.lPV	3.225″ Square Rope Privacy - half pair	$37	$40
R037.xxx.PS	5.25″ Square Rope Passage - pair	$124	$130
R037.xxx.FD	5.25″ Square Rope Dummy - pair	$124	$130
R037.xxx.lPS	5.25″ Square Rope Passage - half pair	$62	$65
R037.xxx.lDM	5.25″ Square Rope Dummy - half pair	$62	$65
R037.xxx.PV	5.25″ Square Rope Privacy - pair	$124	$130
R037.xxx.RPV (.LPV)	5.25″ Square Rope Privacy - half pair	$62	$65
R038.xxx.PS	9.4″ Square Rope Passage - pair	$238	$262
R038.xxx.FD	9.4″ Square Rope Dummy - pair	$238	$262
R038.xxx.lPS	9.4″ Square Rope Passage - half pair	$119	$131
R038.xxx.lDM	9.4″ Square Rope Dummy - half pair	$119	$131
R038.xxx.PV	9.4″ Square Rope Privacy - pair	$238	$262
R038.xxx.RPV (.LPV)	9.4″ Square Rope Privacy - half pair	$119	$131
R038.xxx.ENTR	9.4″ Square Rope Entry Kit - pair	$411	$435

NOTE: PVD finishes not available for this design.

Entry/Non-Egress: Supports 1 ¾" doors. Includes cylinder and deadbolt latch. Must order desired knobs or levers and knob/lever passage latch along with 6502 or Spring Assist Adaptor separately.

Egress: Supports 1 ¾" doors. Includes cylinder, spindle, deadbolt latch, knob/lever latch, and egress cartridge. Must order desired knobs or levers separately. Spindle included with Egress kit will work from 1.75" to 2.25" Thick Doors. Must order 5399.xxx.C Thick Door Kit for doors 2" to 2.25" thick. Interior Egress roses do not match Interior Non-Egress or Dummy roses.

R045 – R047 Mid-Century Rosettes

Item #	Description	003, 031, 033, 050, 060, 102, 112, 150, 151, 190, 260 264	044, 055, 056, 402, 452
R045.xxx.PS	2″ Mid-Century Passage - pair	$66	$74
R045.xxx.FD	2″ Mid-Century Dummy - pair	$66	$74
R045.xxx.lPS	2″ Mid-Century Passage - half pair	$33	$37
R045.xxx.lDM	2″ Mid-Century Dummy - half pair	$33	$37
R045.xxx.PV	2″ Mid-Century Privacy - pair	$66	$41
R045.xxx.lPV	2″ Mid-Century Privacy - half pair	$33	$37
R046.xxx.PS	2.625″ Mid-Century Passage - pair	$74	$81
R046.xxx.FD	2.625″ Mid-Century Dummy - pair	$74	$81
R046.xxx.lPS	2.625″ Mid-Century Passage - half pair	$37	$40
R046.xxx.lDM	2.625″ Mid-Century Dummy - half pair	$37	$40
R046.xxx.PV	2.625″ Mid-Century Privacy - pair	$74	$81
R046.xxx.lPV	2.625″ Mid-Century Privacy - half pair	$37	$40
R047.xxx.PS	10″ Mid-Century Passage - pair	$238	$262
R047.xxx.FD	10″ Mid-Century Dummy - pair	$238	$262
R047.xxx.lPS	10″ Mid-Century Passage - half pair	$119	$131
R047.xxx.lDM	10″ Mid-Century Dummy - half pair	$119	$131
R047.xxx.PV	10″ Mid-Century Privacy - pair	$238	$262
R047.xxx.RPV (.LPV)	10″ Mid-Century Privacy - half pair	$119	$131
R047.xxx.ENTR	10″ Mid-Century Entry Kit - pair	$411	$435
R047.xxx.EGRK	10″ Mid-Century Entry Egress Kit - Knob Adaptor	$502	$526
R047.xxx.EGRL	10″ Mid-Century Entry Egress Kit - Lever Adaptor	$502	$526

Entry/Non-Egress: Supports 1 ¾" doors. Includes cylinder and deadbolt latch. Must order desired knobs or levers and knob/lever passage latch along with 6502 or Spring Assist Adaptor separately.

Egress: Supports 1 ¾" doors. Includes cylinder, spindle, deadbolt latch, knob/lever latch, and egress cartridge. Must order desired knobs or levers separately. Spindle included with Egress kit will work from 1.75" to 2.25" Thick Doors. Must order 5399.xxx.C Thick Door Kit for doors 2" to 2.25" thick. Interior Egress roses do not match Interior Non-Egress or Dummy roses.

*2.625" diameter or larger privacy roses do NOT include 5097 Active backplates.

**Rose covers 2.125" hole on pre-bored door.

SOLID BRASS

R048 Contemporary Rosettes

R048

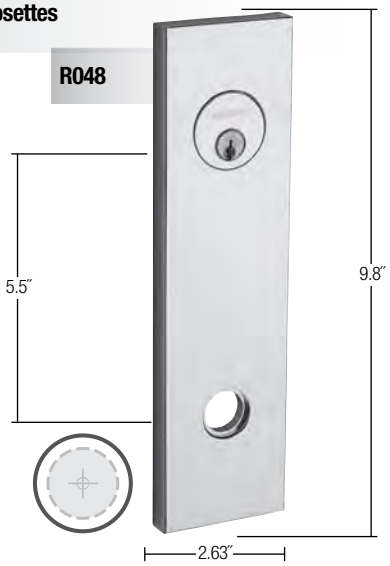

Item #	Description	003, 031, 033, 050, 060, 102, 112, 150, 151, 190, 260 264	044, 055, 056, 402, 452
R048.xxx.PS	9.8″ Contemporary Passage - pair	$238	$262
R048.xxx.FD	9.8″ Contemporary Dummy - pair	$238	$262
R048.xxx.IPS	9.8″ Contemporary Passage - half pair	$119	$131
R048.xxx.IDM	9.8″ Contemporary Dummy - half pair	$119	$131
R048.xxx.PV	9.8″ Contemporary Privacy - pair	$238	$262
R048.xxx.RPV (.LPV)	9.8″ Contemporary Privacy - half pair	$119	$131
R048.xxx.ENTR	9.8″ Contemporary Entry Kit - pair	$411	$435
R048.xxx.EGRK	10″ Contemporary Entry Egress Kit - Knob Adaptor	$502	$526
R048.xxx.EGRL	10″ Contemporary Entry Egress Kit - Lever Adaptor	$502	$526

Entry/Non-Egress: Supports 1 ¾" doors. Includes cylinder and deadbolt latch. Must order desired knobs or levers and knob/lever passage latch along with 6502 or Spring Assist Adaptor separately.

Egress: Supports 1 ¾" doors. Includes cylinder, spindle, deadbolt latch, knob/lever latch, and egress cartridge. Must order desired knobs or levers separately. Spindle included with Egress kit will work from 1.75" to 2.25" Thick Doors. Must order 5399.xxx.C Thick Door Kit for doors 2" to 2.25" thick. Interior Egress roses do not match Interior Non-Egress or Dummy roses.

*2.625" diameter or larger privacy roses do NOT include 5097 Active backplates.

**Rose covers 2.125" hole on pre-bored door.

R049 – R051 Hollywood Hills Rosettes

R049

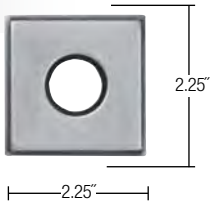

R050

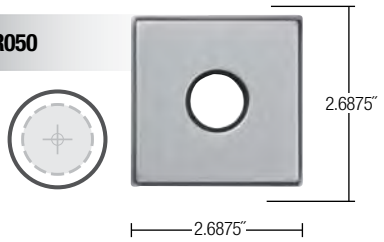

R051

**Shown in passage*

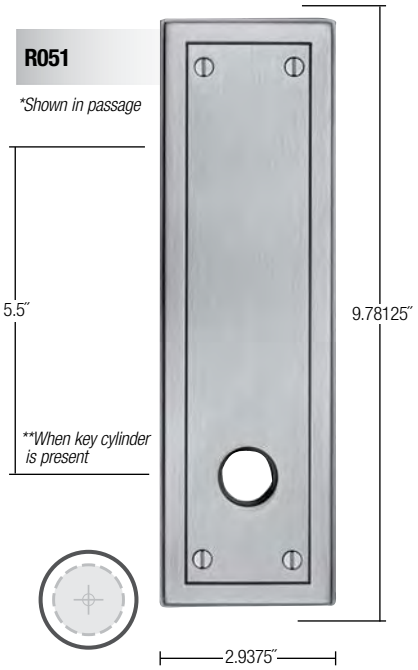

Item #	Description	003, 031, 033, 050, 060, 102, 112, 150, 151, 190, 260 264	044, 055, 056, 402, 452
R049.xxx.PS	2.25″ Hollywood Hills Passage - pair	$79	$86
R049.xxx.FD	2.25″ Hollywood Hills Dummy - pair	$79	$86
R049.xxx.IPS	2.25″ Hollywood Hills Passage - half pair	$39	$43
R049.xxx.IDM	2.25″ Hollywood Hills Dummy - half pair	$39	$43
R049.xxx.PV	2.25″ Hollywood Hills Privacy - pair	$79	$86
R049.xxx.IPV	2.25″ Hollywood Hills Privacy - half pair	$39	$43
R050.xxx.PS	2.625″ Hollywood Hills Passage - pair	$86	$94
R050.xxx.FD	2.625″ Hollywood Hills Dummy - pair	$86	$94
R050.xxx.IPS	2.625″ Hollywood Hills Passage - half pair	$43	$47
R050.xxx.IDM	2.625″ Hollywood Hills Dummy - half pair	$43	$47
R050.xxx.PV	2.625″ Hollywood Hills Privacy - pair	$86	$94
R050.xxx.IPV	2.625″ Hollywood Hills Privacy - half pair	$43	$47
R051.xxx.PS	9.2″ Hollywood Hills Passage - pair	$258	$282
R051.xxx.FD	9.2″ Hollywood Hills Dummy - pair	$258	$282
R051.xxx.IPS	9.2″ Hollywood Hills Passage - half pair	$129	$141
R051.xxx.IDM	9.2″ Hollywood Hills Dummy - half pair	$129	$141
R051.xxx.PV	9.2″ Hollywood Hills Privacy - pair	$258	$282
R051.xxx.IPV	9.2″ Hollywood Hills Privacy - half pair	$129	$141
R051.xxx.RPV (.LPV)	9.2″ Hollywood Hills Privacy - half pair	$129	$141
R051.xxx.ENTR	9.2″ Hollywood Hills Entry Kit - pair	$435	$459
R051.xxx.EGRK	9.2″ Hollywood Hills Entry Egress Kit - Knob Adaptor	$526	$552
R051.xxx.EGRL	9.2″ Hollywood Hills Entry Egress Kit - Lever Adaptor	$526	$552

Entry/Non-Egress: Supports 1 ¾" doors. Includes cylinder and deadbolt latch. Must order desired knobs or levers and knob/lever passage latch along with 6502 or Spring Assist Adaptor separately.

Egress: Supports 1 ¾" doors. Includes cylinder, spindle, deadbolt latch, knob/lever latch, and egress cartridge. Must order desired knobs or levers separately. Spindle included with Egress kit will work from 1.75" to 2.25" Thick Doors. Must order 5399.xxx.C Thick Door Kit for doors 2" to 2.25" thick. Interior Egress roses do not match Interior Non-Egress or Dummy roses.

Rose Retainers

5197.xxx

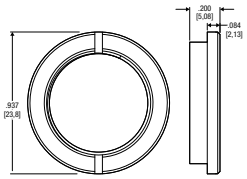

5194.xxx.A

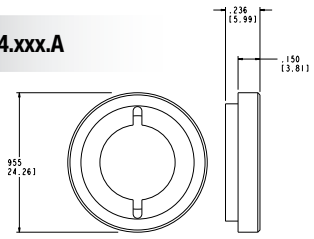

Item #	Description	Price
5197.xxx	Rose Retainer	$4
5194.xxx.A	Rose Retainer Small Shank	$4

5197.xxx – Rose Retainer

>Rose Retainers furnished standard with all roses.
>Finishes:
· 000 for 003, 030, 031, 033, 050, 060, 040
· 190 for 102, 112, 151, 190, 402, 412, 452
· 264 for 260, 264, 150, 140, 055, 056

5494.xxx.A – Rose Retainer Small Shank

>Only available in finishes 019, 140, 150, 151, 190, 221

LATCHES

Passage & Privacy Latches

QUICK SHIP

Passage Latches

Item #	Description	Backset	Faceplate	003, 031, 033, 050, 060, 102, 112, 150, 151, 152, 190, 260, 264	044, 055, 056
5510.xxx (.ASA, .FLS)	Knob-Strength Passage latch	2.375″	1″w	$65	$71
5512.xxx* (.ASA)	Knob-Strength Passage latch	2.375″	1.125″w	$65	$71
5513.xxx (.ASA, .FLS)	Lever-Strength Passage latch	2.375″	1″w	$65	$71
5515.xxx* (.ASA)	Lever-Strength Passage latch	2.375″	1.125″w	$65	$71
5520.xxx (.ASA, .FLS)	Knob-Strength Passage latch	2.75″	1″w	$65	$71
5522.xxx* (.ASA)	Knob-Strength Passage latch	2.75″	1.125″w	$65	$71
5523.xxx (.ASA, .FLS)	Lever-Strength Passage latch	2.75″	1″w	$65	$71
5525.xxx* (.ASA)	Lever-Strength Passage latch	2.75″	1.125″w	$65	$71

Privacy Latches

Item #	Description	Backset	Faceplate	Tier 1	Tier 2
5510.xxx.P (.ASA, .FLS)	Knob-Strength Privacy latch	2.375″	1″w	$65	$71
5512.xxx.P* (.ASA)	Knob-Strength Privacy latch	2.375″	1.125″w	$65	$71
5513.xxx.P (.ASA, .FLS)	Lever-Strength Privacy latch	2.375″	1″w	$65	$71
5515.xxx.P* (.ASA)	Lever-Strength Privacy latch	2.375″	1.125″w	$65	$71
5520.xxx.P (.ASA, .FLS)	Knob-Strength Privacy latch	2.75″	1″w	$65	$71
5522.xxx.P* (.ASA)	Knob-Strength Privacy latch	2.75″	1.125″w	$65	$71
5523.xxx.P (.ASA, .FLS)	Lever-Strength Privacy latch	2.75″	1″w	$65	$71
5525.xxx.P* (.ASA)	Lever-Strength Privacy latch	2.75″	1.125″w	$65	$71

1″ WIDE FACEPLATE

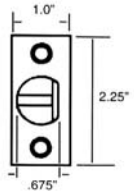

1.125″ WIDE FACEPLATE*

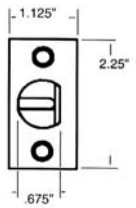

2.375″ BACKSET LATCH

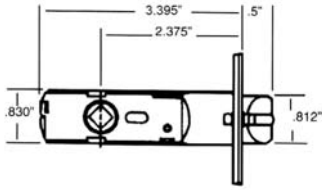

2.75″ BACKSET LATCH

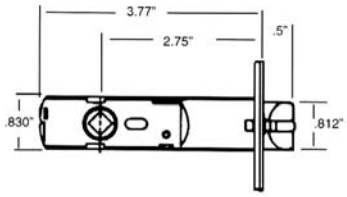

Latches NOT available in Distressed finishes, non-distressed equivalents 402=102, 412=112, 452=152

*Latches with 1.125″ wide faceplate commonly used for commercial applications

Latches available with Standard strike (no suffix), ASA strike (.ASA) or Full Lip Strike (.FLS)

Example: 5510.xxx = Standard strike
5510.xxx.ASA = ASA strike
5510.xxx.FLS = Full Lip Strike

ALL INTERIOR LATCHES:

- Hub rotation only 28° for easy turning
- Non-handed latches (reversible)
- Fully adjustable fronts for use on beveled doors
- Bolt head features anti-friction insert for smooth operation
- Lever-Strength latches manufactured with heavy duty springs

INCLUDED WITH INTERIOR LATCHES:

- Standard Box Strike (T-Strike)
- ASA or Full Lip Strike also available at no charge – specify as follows:
  - 5510.xxx.ASA — Latch x ASA Strike
  - 5510.xxx.FLS — Latch × Full Lip Strike
- Wood fasteners and template
- Dust Box – 5510.000 (not included with .FLS & .ASA latches)
- 3.75″ spindle*
- Privacy Button (with Privacy Latches)

NOTE: For Doors 1.75" or thicker or use with escutcheon plates, a longer spindle is likely needed. See Spindle Chart on pg 51.

UL LISTED Estate Passage/Privacy

c UL us LISTED

Only select Estate passage and privacy sets have been certified by UL at this time. This is determined by the rose that is used on the particular set, along with the use of the Estate 6502.009 adaptor. Estate roses that meet the UL requirement when used in conjunction with the Estate 6502.009 adaptor are as follows:

5004	R004 PS/PV	R016 PS/PV	R027/R028/R029 PS/PV/ENTR
5075	R008 PS/PV	R017 PS/PV	R030/R031/R032 PS/PV/ENTR
5127	R010 PS/PV	R026 PS/PV	R033/R034/R035 PS/PV/ENTR
5149	R012 PS/PV		R036/R037/R038 PS/PV/ENTR
			R039/R040/R041 PS/PV/ENTR

Item #	Description	003, 031, 033, 050, 060, 102, 112, 150, 151, 152, 190, 260, 264	044, 055, 056
U5510.xxx	UL Kit for Estate passage or privacy sets	$25	$30

Included with each kit:
UL latch faceplate, Inside & Outside UL Shield, UL Retaining Ring

5019	5047	5070	5126	5142	5149
5021	5048	5076	5127	5145	5153
5033S	5053	5078	5129	5146	5158
5042	5058	5119	5133S	5147	5159
5046	5059	5123	5134	5148	

ORDERING:

1.) Choose your Estate knob or lever pair
2.) Choose your Estate passage or privacy rose from the list above
3.) Choose your knob or lever latch
4.) Add the 6502.009 adaptor
5.) Choose the UL kit for Estate passage or privacy sets in the finish that matches your knob or lever latch: U5510.xxx

Note: all components from the passage/privacy kit must be used for UL certification

*2.625" diameter or larger privacy roses do NOT include 5097 Active backplates.

***QUICK SHIP** is available in **limited functions and finishes.**
For complete listing, please refer to page 272.

5210 & 5300 Replacement Latches

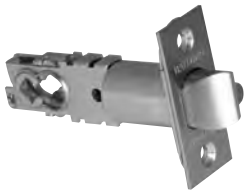

Universal Deadlocking Latch for Keyed Entry

Item #	Adjustable Backset	Front Length	Front Width	Description	Price
5210.xxx	2.375″ (60mm) 2.75″ (70mm)	2.25″ (57mm)	1″ (25mm)	Deadlocking Latch Bolt	$53

FEATURES: Latch bolts have a .5″ throw, are reversible and can be used on beveled doors. Latches are supplied with 1″ (25mm) face plates.

PACKED: One per box with strike, fasteners and template

Adjustable Latch for Tubular Handlesets

Item #	Description	Price	
5300.xxx.9	Adjustable Latch	$48	$51

5510.xxx.0030 – Privacy Button

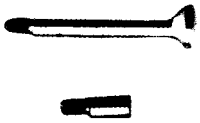

Item #	Description		
5510.xxx.0030	Privacy Button – All Knob-Strength latches	$12	$18
5199.000	Privacy Button Extender	$6	—

Furnished with all privacy tubular latch sets (latches ordered .P)
Use to extend length of privacy button in applications where hardware is installed on doors over 1.75″ thick and/or with escutcheon plates thicker than .25″

2.125” Pre-Drilled Door Adaptors

Item #	Description	Price
6503.009*	Standard Pre-Drillled Door Adaptor	$12
6504.009**	Spring assisted Pre-Drilled Door Adaptor for Levers	$14

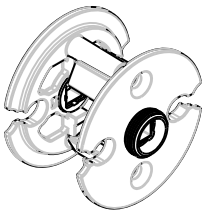

6503.009
Standard Adaptor

NOTE: Accomodates 1 3/8” and 1 3/4” door thickness.

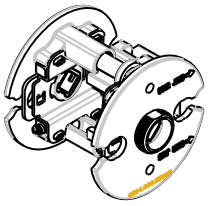

6504.009
Spring Assisted Adaptor

* We recommend you use the 6503.009 adaptor on knobs and lighter levers. Works with both knob & lever strength latches. The 6503.009 was designed off of the 6502.009 adaptor with an added cam to alleviate vertical wobble.

**We recommend you use the 6504.009 adaptor on heavier levers when using a lever strength latch, please refer to the list below:

5112
5113
5116
5118
5125
5162
5173
5440V
5445V
5485V
L002
L004
L006
L016
L023
L029

Spare Parts

Item #	Description	Price
1327.009	Set Screws	$2
5084.009.0002	Dummy Trim Plate	$3
5085.000	Graphite Impregnated Nylon Spacer	$2
5097.009.N	Active Trim Back Plate (each)	$10

1327.009
Set Screws

5084.009.0002
Dummy Trim Plate

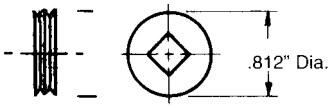

5097.009.N
Active Trim Back Plate

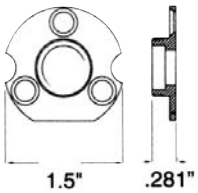

5085.000
Graphite Impregnated Nylon Spacer

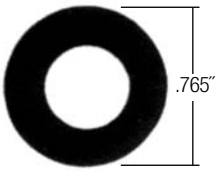

1327.009 – Set Screws
>Included with ALL Estate knobs and levers
>0.25″ Black Oxide

5084.009.0002 – Dummy Trim Plate
>This plate can be ordered separately to convert other finishes of screw covers to a rigid mounting installation.

5097.009.N – Active Trim Back Plate
>For use with ALL Estate active roses

5085.000 – Graphite Impregnated Nylon Spacer
>Included with all Privacy rosettes
>Eliminates end play of trim and assures smooth operation

STRIKES

5510.TSTR – Standard Box Strike (T Strike)

Included with all Passage & Privacy Latches

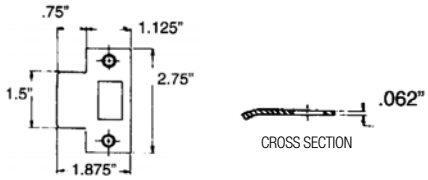

Item #	Description	003, 031, 033, 050, 060, 102, 112, 150, 151, 152, 190, 260, 264	044, 055, 056
5510.xxx.TSTR	Standard Box Strike (Included with all Passage & Privacy Latches)	$18	$25

LIP TO CENTER DIMENSION (LTC): 1.312″ (33mm)
DUST BOX: furnished unattached (55100)
TEMPLATE: metal frames to be prepared in accordance with ANSI standard A115.2

5510.ASTR – ASA strike

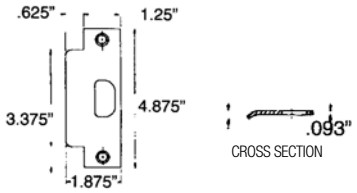

Item #	Description	003, 031, 033, 050, 060, 102, 112, 150, 151, 152, 190, 260 264	044, 055, 056
5510.xxx.ASTR	ASA Strike	$18	$25

LTC: 1.25″ (32mm)
DUST BOX: not furnished
Template: metal frames to be prepared in accordance with ANSI standard A115.2

5510.E158, .E178, .E214 – Extended T strike

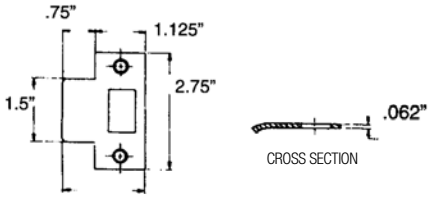

Item #	Description	003, 031, 033, 050, 060, 102, 112, 150, 151, 152, 190, 260, 264	044, 055, 056
5510.xxx.E158	Extended Lip Box Strike – 1.625″LTC	$18	$25
5510.xxx.E178	Extended Lip Box Strike – 1.875″LTC	$18	$25
5510.xxx.E214	Extended Lip Box Strike – 2.25″LTC	$18	$25

LTC: 5510.xxx.E158 – 1.625″ (41mm)
LTC: 5510.xxx.E178 – 1.875″ (48mm)
LTC: 5510.xxx.E214 – 2.25″ (57mm)
DUST BOX: not furnished (use dust box provides with standard T strike)

5510.FSTR – Full lip strike

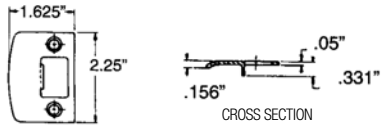

Item #	Description	003, 031, 033, 050, 060, 102, 112, 150, 151, 152, 190, 260, 264	044, 055, 056
5510.xxx.FSTR	Full Lip Strike	$18	$25

LTC: 1.125″ (29mm)
DUST BOX: not available

5300.EFLS – Extended full lip strike (ONLY SIZE AVAILABLE)

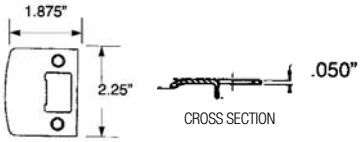

Item #	Description	003, 031, 033, 050, 060, 102, 112, 150, 151, 152, 190, 260, 264	044, 055, 056
5300.xxx.EFLS	Extended Full Lip Strike	$18	$25

For 2″ (51mm) and 2.25″ (57mm) thick doors or when trim condition necessitates a larger strike
Can also be used with Estate handlesets and interior sets
LTC: 1.375″ (35mm).

5528.R (.L) – Combination privacy strike – ESCUTCHEON

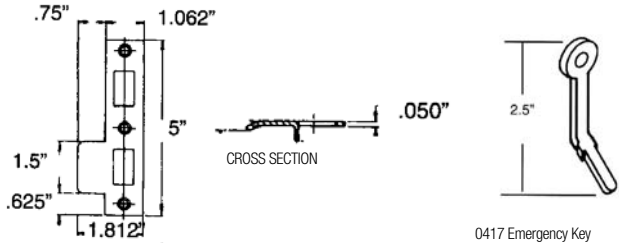

Item #	Description	003, 031, 033, 050, 060, 102, 112, 150, 151, 152, 190, 260, 264	044, 055, 056
5528.xxx.R (.L)	Combination Privacy Strike	$18	$25

LTC: 1.28″ (33mm), other lengths not available
FEATURES: Permits use of 5500 series tubular latches and 0413 or 0418 mortise bolts with KT and KE escutcheon trim
Strike is designed with a curved lip, so proper hand of door is required
Furnished with 0417 Emergency key standard
DUST BOX: Boxes furnished with tubular latches/mortise bolts can be used in combination with strike
NOTE: handling of strike is based on latch bolt being installed below deadbolt

5510.000 – Dust box

Item #	Description		
5510.000.TSTR	Dust box for use with 5510.xxx.TSTR strike	(000 finish only)	$6
5510.000.FSTR	Dust box for use with 5510.xxx.FSTR strike	(000 finish only)	$6

Conceals installation marks and cutouts

SPINDLES

0509 - 0517 Broached Straight Spindles – PASSAGE

Item #	Description	Size	Price
0509.004	Broached straight	3″	$14
0510.004	Broached straight	3.5″	$14
0511.004	Broached straight	4″	$14
0512.004	Broached straight	4.5″	$14
0513.004	Broached straight	5″	$14
0514.004	Broached straight	5.5″	$14
0515.004	Broached straight	6″	$14
0516.004	Broached straight	7″	$14
0517.004	Broached straight	3.75″	$14

0519 - 0527 Broached Swivel Spindles – PRIVACY

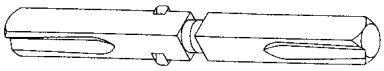

Item #	Description	Size	Price
0519.004	Broached swivel	3″	$19
0520.004	Broached swivel	3.5″	$19
0522.004	Broached swivel	4″	$19
0521.004	Broached swivel	4.5″	$19
0523.004	Broached swivel	5″	$19
0524.004	Broached swivel	5.5″	$19
0525.004	Broached swivel	6.5"	$19
0527.004	Broached swivel	3.75″	$19

0530 - 0539 Broached Half Spindles – FRONT DOOR

(thumbpiece to knob or lever)

QUICK SHIP

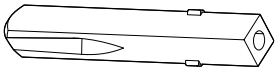

Item #	Description	Size	Price
0530.004	Broached half	2.375″	$14
0531.004	Broached half	2.875″	$14
0532.004	Broached half	3.375″	$14
0533.004	Broached half	2.25″	$14
0539.004	Broached half	2.625″	$14

>For mounting all current Estate knobs and levers to thumbpiece of handlesets

>Included with all 'set' orders

SPINDLE CHART & KEY

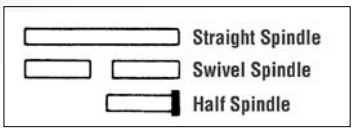

Door Thickness	1.375″		1.75″		2″		2.25″		2.5″	
Lock Trim Thickness	Spindle	Half Spindle	Spindle	Half Spindle	Spindle	Half Spindle	Spindle	Half Spindle	Spindle	Half Spindle
A – .0625″	3.5″	2.25″	4″	2.25″	4″	2.25″	4.5″	2.25″	4.5″	2.375″
B – .0937″	3.5″	2.25″	4″	2.25″	4″	2.25″	4.5″	2.25″	4.5″	2.375″
C – .125″	3.5″	2.25″	4″	2.25″	4.5″	2.25″	4.5″	2.25″	5″	2.375″
D – .1875″	3.5″	2.25″	4″	2.25″	4.5″	2.25″	4.5″	2.375″	5″	2.375″
E – .25″ Estate Roses	3.5″	2.25″	4″	2.25″	4.5″	2.25″	4.5″	2.375″	5″	2.875″
F – .3125″	4″	2.25″	4.5″	2.25″	4.5″	2.375″	5″	2.375″	5″	2.875″
G – .375″	4″	2.25″	4.5″	2.25″	5″	2.375″	5″	2.875″	5.5″	2.875″
H – .435″	4.5″	2.25″	4.5″	2.375″	5″	2.375″	5″	2.625″	5.5″	2.875″
I – .56″	4.5″	2.25″	5″	2.375″	5″	2.625″	5.5″	2.625″	5.5″	2.875″
J – .75″	5″	2.625″	5.5″	2.875″	5.5″	2.875″	6″	2.875″	6″	2.875″

.A SUFFIX TRANSITIONAL SPINDLES (OLD STYLE):
For use with all discontinued Estate **threaded** knobs & levers, as well as all current Estate knobs and levers

Transitional Straight Spindles – Passage

Item #	Description	Size	Price
0509.004.A	Transitional straight	3″	$20
0510.004.A	Transitional straight	3.5″	$20
0511.004.A	Transitional straight	4″	$20
0512.004.A	Transitional straight	4.5″	$20
0513.004.A	Transitional straight	5″	$20
0514.004.A	Transitional straight	5.5″	$20
0515.004.A	Transitional straight	6″	$20
0516.004.A	Transitional straight	7″	$20

Transitional Swivel Spindles – Privacy

Item #	Description	Size	Price
0519.004.A	Transitional swivel	3″	$26
0520.004.A	Transitional swivel	3.5″	$26
0521.004.A	Transitional swivel	4.5″	$26
0522.004.A	Transitional swivel	4″	$26
0524.004.A	Transitional swivel	5.5″	$26
0525.004.A	Transitional swivel	6.5″	$26

Transitional Half Spindles – Front Door (thumbpiece to knob or lever)

Item #	Description	Size	Price
0530.004.A	Transitional half	2.375″	$20
0531.004.A	Transitional half	2.875″	$20
0532.004.A	Transitional half	3.375″	$20
0533.004.A	Transitional half	2.25″	$20

*QUICK SHIP is available in limited functions and finishes.
For complete listing, please refer to page 272.

Strikes NOT available in Distressed finishes, non-distressed equivalents 402=102, 412=112, 452=152

PINNED AND DUMMY SPINDLES

Knob/Lever Pinning:

Definition: Pinning is a permanent attachment of the outside knob or lever to the spindle. Outside levers typically are pinned for added security in public commercial settings.

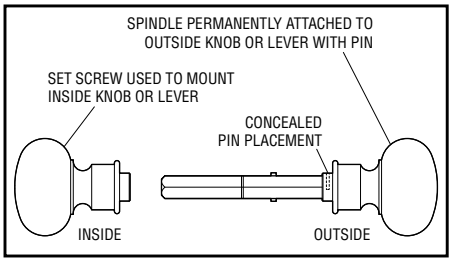

All Baldwin levers meet ADA standards.

Pinning Charge for Estate passage or privacy sets (pair) $72

Included with .MRPN cost

ORDER:

1. Knobs or Levers & Finish

SPECIFY FOR REFERENCE ONLY:

2. Door thickness
3. Trim to be used
4. Handing of the outside lever, if applicable
5. Spindle (included)

For pinning orders, we recommend calling Customer Service

Dummy Spindles – Rosettes

Half

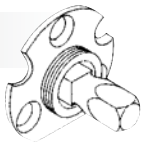

Full

Item #	Description	Price
5098.004.N	Half Dummy Back Plate	$10
5098.009.N	Full Dummy Back Plate	$10
5098.004.A	Transitional Half Dummy Back Plate	$15

5098.004.N – **Half Dummy Spindle**

> Half dummy surface mounting for all current Estate knobs and levers
> Rose threads onto adaptor
> Included with roses ordered .IDM
> If surface mounting is problematic (ie. hollow core doors) please order Rigid Mounting Spindle (5084.xxx) – shown below

NOTE: 5098.004.A Transitional spindle for discontinued threaded knobs & levers, as well as all current Estate knobs and levers.

5098.009.N – **Full Dummy Adaptor**

> Rose threads onto adaptor
> For all current Estate knobs and levers
> Two adaptors included with roses ordered .FD
> Spindle ordered separately

Dummy Insert & Filler Plate

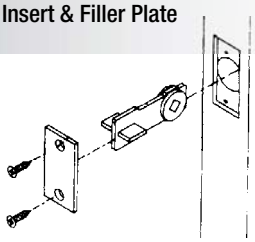

Item #	Description	Price
5090.020.A	Dummy insert & filler plate	$21

>Used with 6502.009 adaptor to enable full dummy mounting
>Conceals face plate cut-out in edge of door

Dummy Spindles & Adaptors – Escutcheon

Half

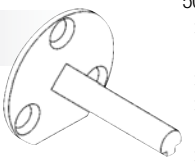

5077, 5091, 5092 – **Half Dummy Spindle**

>For mounting all current Estate knobs and levers to Escutcheon plates
>5092 for most escutcheons
>5077 for thick escutcheons: ≥ .75″ thick (eg. Hamilton & Tremont)
>5091 for thin escutcheons: ≤ .1″ thick (eg. Boston, San Diego, etc.)

Full

5099.004 – **Full Dummy Adaptor**

>For mounting escutcheons on Full Dummy applications (2 needed)
>1.175″ diameter (30mm)
>Spindle ordered separately

Item #	Description	Size	Price
5077.004	Half Dummy Spindle	1.5″	$15
5091.004	Half Dummy Spindle	0.875″	$15
5092.004	Half Dummy Spindle	1.125″	$15
5099.004	Full Dummy Adaptor	1.175″	$6

.A SUFFIX TRANSITIONAL SPINDLES: **(OLD STYLE)**:
For use with all discontinued Estate **threaded** knobs & levers, as well as all current Estate knobs and levers

Transitional Half Dummy Spindles – ESCUTCHEON

Item #	Description	Size	Price
5077.004.A	Half Dummy Spindle	1.5″	$15
5091.004.A	Half Dummy Spindle	0.875″	$15
5092.004.A	Half Dummy Spindle	1.125″	$15

NOTE: Baldwin Estate spindles are 7.28mm unless noted otherwise.

PRIVACY MORTISE BOLTS

Mortise Bolt, Tubular Design

0413

Item #	Description	Backset	Wt.	003, 031, 033, 050, 060, 102, 112, 150, 151, 190, 260, 264	044, 055, 056, 402, 452
0413.xxx	Contemporary Mortise Bolt	2.75″	0.6	$89	$94
0414.xxx	Traditional Mortise Bolt	2.75″	0.6	$89	$94
0418.xxx	Contemporary Mortise Bolt	2.375″	0.5	$89	$94
0419.xxx	Traditional Mortise Bolt	2.375″	0.5	$89	$94

>Heavy duty solid brass mortise bolt with steel housing
>Smooth and positive action
>Use with tubular latches for privacy/patio condition
>May be installed above or below latches, depending upon visibility
>Emergency release trim available at additional charge
>Available Less Turn Piece (.LTP) – see next page to select a Turn Piece

IMPORTANT: To enable emergency trim to function, the turn piece spindle must be cut to extend no farther than halfway through the bolt
PACKED: One in a box with necessary fasteners and template
FSE: BHMA Designation: LO4121

0413.xxx – 2.75″ Backset Mortise Bolt

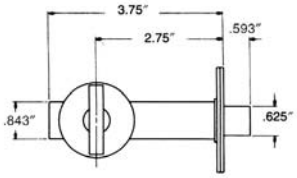

0418.xxx – 2.375″ Backset Mortise Bolt

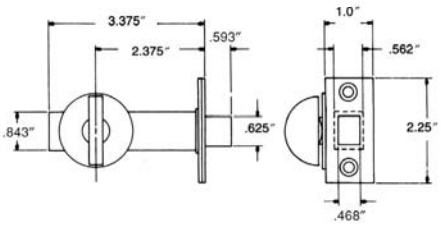

0419

0414.xxx – 2.75″ Backset Mortise Bolt

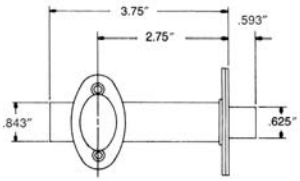

0419.xxx – 2.375″ Backset Mortise Bolt

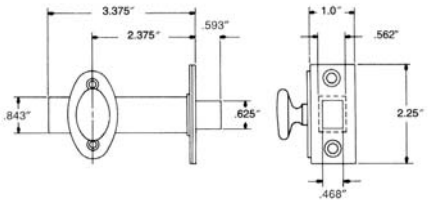

0413 & 0418.LTP
Less Turn Piece

Order Turn Piece separately (next page)

Item #	Description	Backset	Wt.	003, 031, 033, 050, 060, 102, 112, 150, 151, 190, 260, 264	044, 055, 056
0413.xxx.LTP	Mortise Bolt – Less Turn Piece	2.75″	0.4	$35	$41
0418.xxx.LTP	Mortise Bolt – Less Turn Piece	2.375″	0.4	$35	$41

Mortise Bolts .LTP not available in Distressed finishes, non-distressed equivalents:
402=102, 412=112, 452=152*

TURN PIECES | BACKPLATES

Turn Pieces w/ Backplates

Item #	Description	003, 031, 033, 050, 060, 102, 112, 150, 151, 190, 260, 264	044, 055, 056, 402, 452
6728.xxx	Turn Piece **(Will accommodate doors up to 2.25")**	$76	$82
6732.xxx	Turn Piece **(Will accommodate doors up to 2.25")**	$76	$82
6750.xxx	Turn Piece **(Will accommodate doors up to 2.25")**	$76	$82
6751.xxx	Turn Piece **(Will accommodate doors up to 2.25")**	$76	$82
6756.xxx	Turn Piece **(Will accommodate doors up to 2.25")**	$76	$82
6764.xxx	Turn Piece **(Will accommodate doors up to 2.25")**	$76	$82
--	For doors thicker than 2.25" order turn pieces as .EXT.	$89	$94

6728-6764.xxx – Turn Piece w/ Backplates

>For interior & exterior mortise locks, tubular bolts and sectional trim

6733.xxx	Turn Piece **(Will accommodate doors up to 3")**	$76	$82
6760.xxx	Turn Piece **(Will accommodate doors up to 3")**	$76	$82
6762.xxx	Turn Piece **(Will accommodate doors up to 3")**	$76	$82
6766.xxx	Turn Piece **(Will accommodate doors up to 3")**	$76	$82
--	For doors thicker than 3" order turn pieces as .EXT.	$89	$94

6728

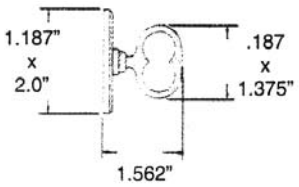

6732

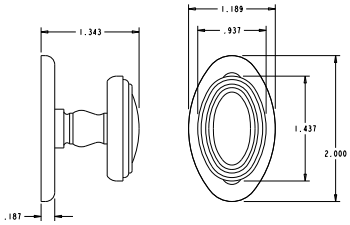

6733

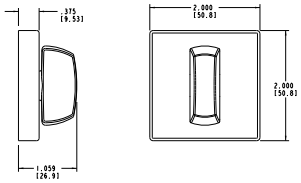

6750

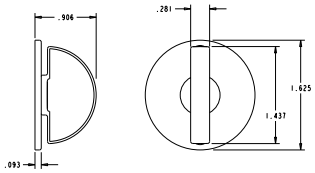

6751

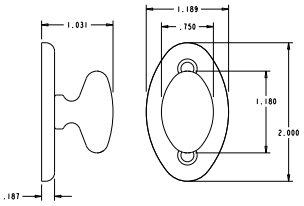

6756

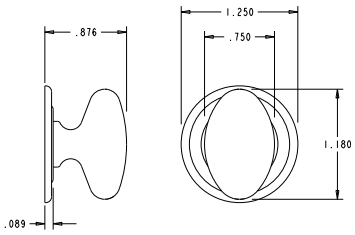

6760

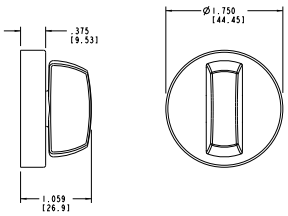

6762

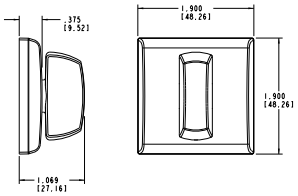

6764

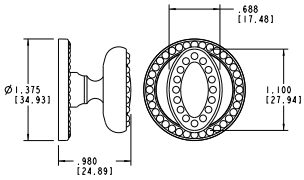

6766

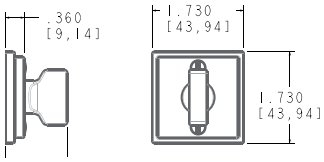

TURN KNOBS

Turn Knobs

6720
Turn Knob for 6750

6725
Turn Knob for 6732

6721
Turn Knobs for 6751 & 6756

6722
Turn Knob for 6728

6729
Turn Knob for 6709 & 6714

6724
Turn Knobs for 6764 & 6710

6735

Item #	Description	Matching Turn Piece	003, 031, 033, 050, 060, 102, 112, 150, 151, 190, 260, 264	044, 055, 056, 402, 452
6720.xxx	Turn Knob	6750	$41	$48
6721.xxx	Turn Knob	6751 & 6756	$41	$48
6722.xxx	Turn Knob	6728	$41	$48
6724.xxx	Turn Knob	6764 & 6710	$41	$48
6725.xxx	Turn Knob	6732	$41	$48
6729.xxx	Turn Knob	6709 & 6714	$41	$48

6720-6729.xxx – Turn Knobs

>For interior & Exterior Trim trim or combined with ER trim to create a custom Turn Piece
>For doors up to 2.25″ thick
>For doors thicker than 2.25″, order .EXT – Extended Turn Knob eg. 6720.xxx.EXT
>10% up charge for assembly of non-standard turn knobs on escutcheon plates.

6735.xxx	Turn Knob	6733, 6760, 6762	$41	$48
TK001.xxx	Turn Knob		$41	$48
TK004.xxx	Turn Knob		$41	$48
TK006.xxx	Turn Knob		$41	$48
TK007.xxx	Turn Knob		$41	$48
TK009.xxx	Turn Knob		$41	$48
--	Turn Knobs above .EXT **(for doors thicker than 2.25″)**		$48	$53

6735 Turn Knob will fit up to 3'' thick doors (.EXT not neccessary)

NOTE: All Turn Knobs may be used with Trim & Key Sets (page 58), or with any Emergency Egress (KE) mortise trim set. C510.509.00095 is required ($1 NET)

TK001

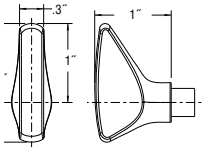

TK007

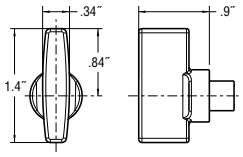

TK004

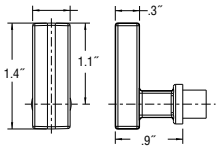

TK009

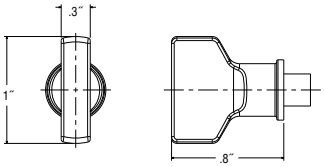

TK006

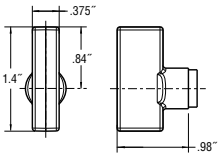

NOTE: Turn piece spindles are .1875″ across.

EMERGENCY RELEASE (ER) TRIM/BACKPLATE

Trim & Key Set

All Trim sets come with Emergency Release Key

Item #	Description	003, 031, 033, 050, 060, 102, 112, 150, 151, 190, 260, 264	044, 055, 056, 402, 452
0403.xxx	Emergency Release Trim & 0417 Key w/ 6701 Cover	$48	$53
0404.xxx	Emergency Release Trim & 0417 Key w/ 6701 Cover	$48	$53
0405.xxx	Emergency Release Trim & 0417 Key w/ 6701 Cover	$48	$53
0406.xxx	Colonial Emergency Release Trim & Key	$48	$53
0407.xxx	Emergency Release Trim & 0417 Key w/ 6701 Cover	$48	$53
0415.xxx	Emergency Release Trim & 0417 Key w/ 6701 Cover	$48	$53
0416.xxx	Emergency Release Trim & 0417 Key w/ 6701 Cover	$48	$53
0421.xxx	Contemporary Round Emergency Release Trim & 0417 Key w/ 6701 Cover (Stainless Steel)	$48	$53
0422.xxx	Lakeshore Emergency Release Trim & 0417 Key w/6701 Cover	$48	$53
0423.xxx	2″ x 2″ Square Emergency Release Trim & 0417 Key w/6701 Cover	$48	$53
0424.xxx	Emergency Release Trim (Backplate)	$48	$53
417.022	Emergency Release Key – Steel	Finish 022 only	$7
5174.022	Emergency Key Supplied w/5500 Series Privacy Latches - Steel	Finish 022 only	$7
6701.xxx	Emergency Release Cover	$12	$18
6703.xxx	Emergency Key - Bit Key (Solid brass key for mortise bolts and privacy function mortise locks)	$41	$41

6701.xxx – Emergency Release Cover

FEATURES: Pressure applied cover
Conceals emergency release opening on privacy lock function.
Designed for use with escutcheon or emergency release trim.

0403

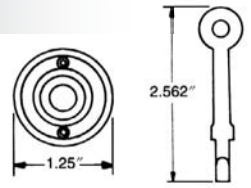

0404

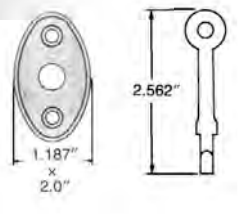

0405

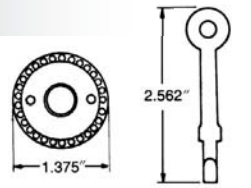

0406

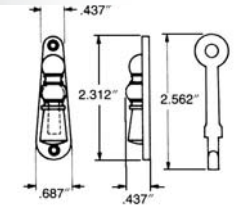

0407

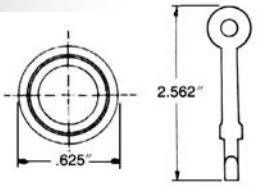

0417.022

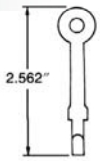

0423

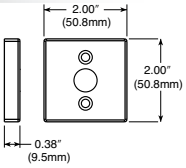

6703.xxx
Emergency Bit Key

0415

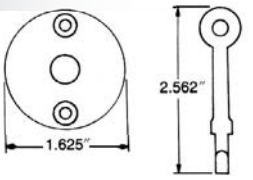

0421

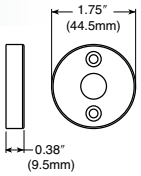

0424

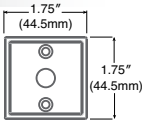

0416

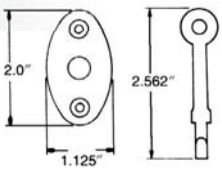

0422

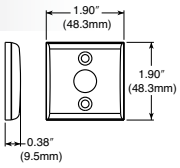

6701
Emergency Release Cover

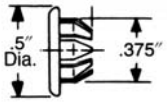

NOTE: Turn piece spindles are .1875″ across.

Half Dummy Rigid Mounting Closet Spindle

Half

Closet

6748.xxx.A

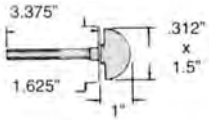

6749.xxx.A

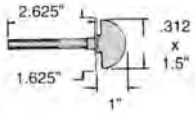

Item #	Description	Spindle Length	Door Thickness	003, 031, 033, 050, 060, 102, 112, 150, 151, 190, 260, 264	044, 055, 056, 402, 452
5084.xxx.A	Half Dummy Rigid Mounting	2.25″	1.375″	$35	$41
6748.xxx.A	Closet Spindle	3.375″	1.75″	$53	$59
6749.xxx.A	Closet Spindle	2.625″	1.375″	$53	$59

5084.xxx – Half Dummy Rigid Mounting Spindle – ROSES

>Optional mounting in place of 5098.004.N for a more secure mounting
>Through-bolt application ideal for hollow core doors or where surface mounting is not recommended

6748-6749.xxx.A – Closet Spindle

>For the inside of closets and low frequency use doors
>Installation is identical to standard trim designs
>For 2.125″ pre-drilled doors, use 5081 closet spindle with 6502.009 adaptor, See Pre-drilled Doors Accessories
CAUTION: Closet spindles are difficult to turn and should not be used where children, aged, or physically-handicapped people may lock themselves within a small space

5081 & 5082

Closet Spindles – Pre-drilled Doors

5081

5082

Item #	Description	Spindle Length	Door Thickness	003, 031, 033, 050, 060, 102, 112, 150, 151, 190, 260 264	044, 055, 056, 402, 452
5081.xxx.A	Closet Spindle	2.625″	1.375″	$53	$59
5082.xxx.A	Closet Spindle	3.375″	1.75″	$53	$59

>For the inside of closets and low frequency use doors
>Mounts with 6502.009 Adaptor for pre-bored doors only

CAUTION: Closet spindles are difficult to turn and should not be used where children, aged, or physically-handicapped people may lock themselves within a small space

Screw Covers

Specially designed to conceal the screw head

0129

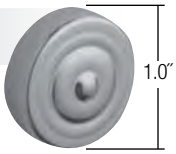

0175

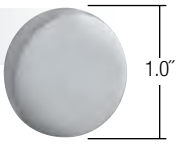

Item #	Description	003, 031, 033, 050, 060, 102, 112, 150, 151, 152, 190, 260, 264	044, 055, 056, 402, 452
0129.xxx	Colonial Screw Cover	$17	$21
0175.xxx	Contemporary Screw Cover	$17	$21

Screw Bases

Rectangular & Lakeshore

0174

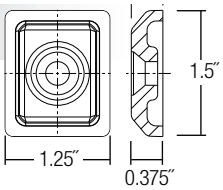

0176

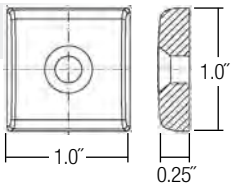

Item #	Description	003, 031, 033, 050, 060, 102, 112, 150, 151, 152, 190, 260, 264	044, 055, 056, 402, 452
0174.xxx	Rectangular Screw Base	$32	$36
0176.xxx	Lakeshore Screw Base	$32	$36

0174.xxx – Rectangular Screw Base

>Specially designed screw base

0176.xxx – Lakeshore Screw Base

>Specially designed screw cover conceals the screw head

IMPORTANT: To enable emergency trim to function, the turn piece must be cut to extend no farther than halfway through the bolt.

INSTALLATION TOOLS

Installation Tools

5198.000.A
Spanner Tool

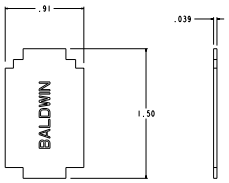

5326.000
Rose Retainer Wrench

8474.000
Aligning Bushing

8480.000
Aligning Tool & Bushing

8481.509.01105
Socket Wrench

Item #	Description	Price
5198.000.A	Spanner Tool	$4
5326.000	Rose Retainer Wrench	$4
8474.000	Aligning Bushing (box of 50)	$18
8480.000	Aligning Tool & Bushing	$14
8481.509.001	Socket Wrench	$9

5198.000.A – Spanner Tool
>One Spanner Tool furnished with all roses/except.

8474.000 – Aligning Bushing
>Box of 50

8480.000 – Aligning Tool & Bushing
>For use in proper alignment of knobs/levers and roses with mortise locks and tubular latches.

8481.509.01105 – Socket Wrench
>For all knob and lever installations

TUBULAR LATCH INSTALLATION W/ALIGNING BUSHING

*NOTE: IN SEPARATE MOUNTING APPLICATIONS, THE MINIMUM DISTANCE BETWEEN CENTER OF BOLTS IS 2.75″.

*This minimum distance is required to allow for proper clearance between latch bolt and mortise bolt strikes (T-Strikes).

NOTE: Mortise bolt may be installed above or below tubular latch, depending upon visibility.

8474.000
Alignment Bushing

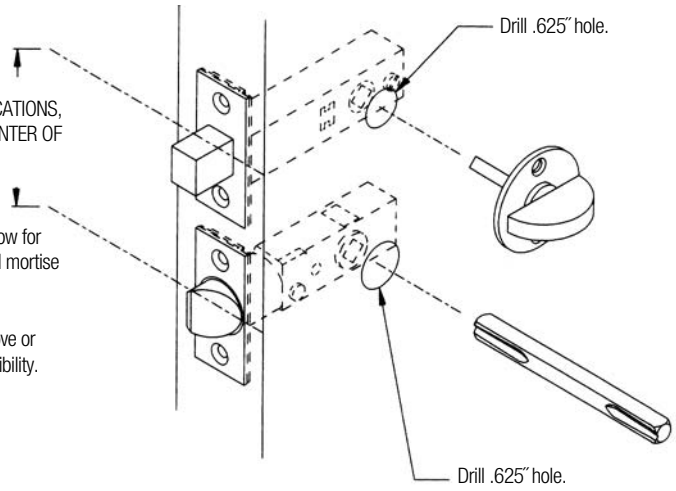

5097.009.N
Back Plate

Use of 8474.000 Aligning Bushing will facilitate installation of trim.
Trim must be in alignment with latch and spindle to prevent binding.

A. Install latch and strike per template instructions.
B. Insert spindle through latch.
C. Position 5097.009 Back Plates over spindle and insert 8474.000 Alignment Bushings.
D. Center mark and install screws into back plates and remove 8474.000 Alignment Bushings.
E. Install trim.

MORTISE BOLT INSTALLATION

When installing mortise bolts, ALWAYS check width of Emergency Release Trim before drilling face bore. Standard bore is .625″ (16mm) completely through door. Emergency Release Trim 0406 and 0407 require a .5″ (13mm) bore on outside face of door; a .625″ (16mm) bore on inside face of door.

IMPORTANT: When Emergency Release Trim is used, the turn piece spindle must be cut to extend no farther than halfway through the bolt.

- **Communicating Door Kit:** For use in conjunction with Baldwin patio deadbolt
  Includes: swivel spindle, rose and screw cover for oppsite side of Communicating Door
- Function: Security between (hotel) rooms with limited space between doors
- Communicating door side compatible with any LARGE thread-on rose style (5048 rose included)
- Immediate availability in standard Estate finishes

Commonly found between two hotel rooms where a functional latch is still required, and limited space between doors does not allow for trim to be installed on exterior sides.

Security between rooms is accomplished with a standard patio dead bolt. Latch & trim offer normal passage functionality on interior, while completing the aesthetic requirement of a complete trim set on the door.

Door kits include components needed to complete communicating door installation:

>Estate 5048 thread-on passage rose and 0129 screw cover

>Components 1 – 6 shown below

>Kits designed to work with standard communicating door thickness of 1.75”

>6502.009 adaptor, latch, knob/lever are not included in kit.

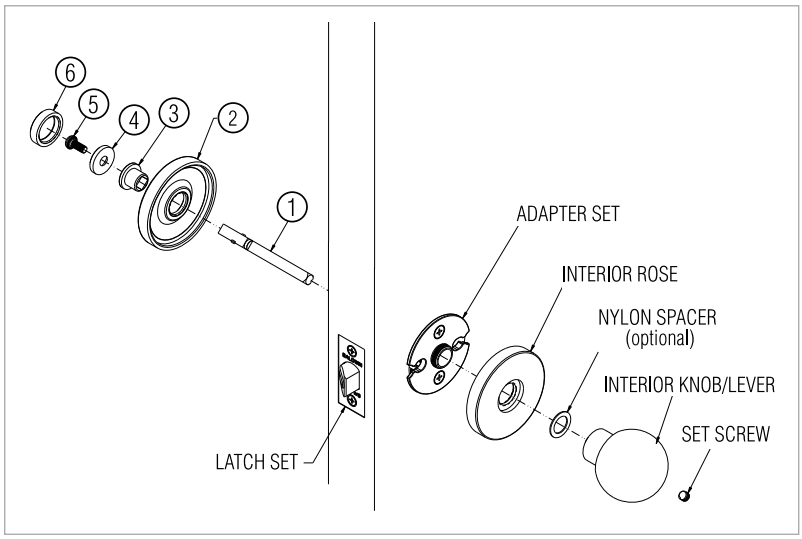

1) 0529.028.T5212 Swivel Spindle Assembly
2) 5048.150.05102 Rose
3) 8480.800.00015 Alignment Bushing
4) 0129.039.00025 Back Plate
5) 1141.028.00009 10-32 X 1/2 Bolt
6) 0129.150.00015 Colonial Screw Cover

LIST PRICING

SKU	Tier 1	Tier 2
5187.xxx	$80	$86

TUBULAR HANDLESETS

Specifications & Standards of Excellence

Estate lock sets are featured in traditional styles in our most popular finishes. Interior latch set designs coordinate beautifully with lockset styles to enable customers to carry a specific design theme throughout the home. Each Estate lockset is packed as a complete set, and is also available by component.

Item	Qty	Part No.	Part Name
1	1	6420.xxx.00052	Cylinder Collar
2	1	6420.xxx.00012	Large Plate
3	1	6420.xxx.00022	Small Plate
4	1	2598.xxx.00013	Door Pull
5	1	5300.xxx.95115	Thumbpiece
6	1	6420.xxx.KT012	Inside Escutcheon
7	1	5350.xxx.00023	Turn Knob
8	1	5064.xxx.00013	Knob-rope
9	1	0129.xxx.00013	Screw Cover
10	1	5300.000.05205	Fastener Packet (Pull/knob)
11	1	5300.228.97085	Alignment Bracket
12	2	1704.039.00115	Threaded Adaptor
13	1	6747.xxx.00013	Thimble
14	1	1005.xxx.05105	Fastener Packet (Inside Plate)
15	1	5196.109.00005	Wave Washer
16	1	8053.509.00015	Plate-tailpiece
17	2	1117.509.00009	#3-48 X .313″ Lg., Fh, Ph, M/s
18	1	5300.000.93505	Fastener Packet (Egress Cartridge)
19	1	5300.000.95505	Rectangular Egress Cartridge Assembly
20	1	8031.xxx.05255	Cylinder Assembly
21	1	5300.000.93205	Spindle/spacer Packet
22	1	5300.028.99055	Mounting Post
23	2	10009.329.00009	#6-32 X .44″ Lg., Fh, Ph, M/s
24	1	5300.000.95995	Thumb Cartridge Assembly
Not Shown On Drawing			
25	1	5300.xxx.95105	Latch Assembly With Faceplate
26	1	8000.xxx.STR15	Strike
27	2	8000.1849.STR35	Dust Box
28	1	8053.xxx.00032	Cylinder Cap
29	1	8208.xxx.DBC15	Deadbolt Assembly (Egress)
30	1	8510.xxx.01135	T-strike
31	1	1013.221.05275	Fastener Packet (Strike)
32	1	1421.028.05105	Fastener Packet (Strike)
33	1	2510.221.00009	Fastener Packet (Latch And Deadbolt)
34	1	Pk.6415	Installation Instructions
35	1	Pk.1082	Estate Strike Marking Template
36	1	Pk.1215	Estate Marking Template
37	1	Pk.1149T	Lifetime Limited Finish/mechanical Warranty

Mechanical Features - Escutcheon Trim Lock sets

>SOLID BRASS: Entrance handle, escutcheon, knob, rose and turn piece are manufactured of solid forged brass for maximum Strength and durability.

>INSTALLATION: Lock sets are designed for easy installation in standard pre-bored wood or metal doors. The adaptor aligns the latch with the trim. Graphic instructions make installation FAST!

>FULLY REVERSIBLE: Accommodates all door conditions and facilitates installation.

>DOOR THICKNESS: Lock sets accommodate a door thickness of 1.75″ (44mm). Conversion kit available for 2.0″ (51mm) and 2.25″ (57mm) thick doors (see price list for details).

>CASE: Deadbolt and latch case are formed of steel for Strength. Most interior working parts are made of solid brass or zinc chromate plated steel for maximum Strength and smooth operation.

>BACKSET: Adjustable backset 2.375″ (60mm), 2.75″ (70mm) latch and deadbolt supplied standard.

>FACE PLATE: Deadbolt and latch supplied with a 1″ (25mm) face plate.

>STRIKE: Deadbolt is furnished with a specially designed reinforcing strike constructed of high grade steel for ultimate Strength and durability. The strike is installed with two (2) 3″ (76mm) security jamb screws and a dust box. The security strike is covered with an armored front to conceal the fasteners. Latches are supplied standard with a box strike (other strikes are available at an additional charge).

>DISTANCE BETWEEN CENTER OF LATCH AND DEADBOLT (CTC): Lockset accommodates 5.5″ (140mm) center to center dimension ONLY.

>BOLT: Deadbolt and latch bolt constructed of solid brass. Deadbolt has 1″ (25mm) throw when extended and a hardened steel insert for maximum protection and security. Latch bolt has a .5″ (13mm) throw when extended to fully engage the door jamb.

>CYLINDER: Cylinder supplied with 5-pin keying.

>KEYS: Designed with a 1.25″ (32mm) wide bow surface to facilitate use by physically challenged people.

>Numerous patents, copyrights, and trademarks are held by the Corporation to protect the integrity and reputation of our distinctive line of hardware appointments.

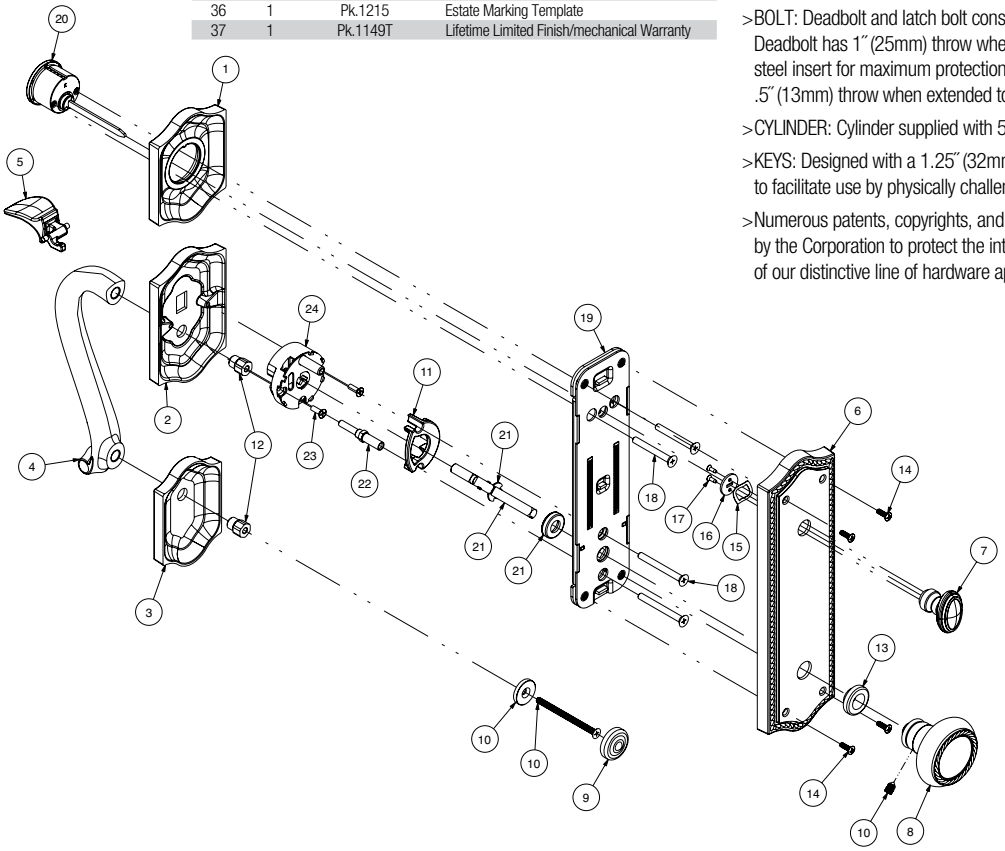

ENTRANCE SETS

ALL ENTRANCE LOCK SETS:

SOLID FORGED BRASS: Entrance handle, cylinder collar, knob, rose and turn piece are manufactured of solid forged brass for maximum strength and durability.

INSTALLATION: Estate lock sets are designed for easy installation in standard pre-bored wood or metal doors. The adaptor aligns the latch with the trim. Graphic instructions make installation FAST!

DOOR THICKNESS: Lock sets accommodate a door thickness of 1-3/4″ (44mm). Conversion kit available for 2″ (51mm) and 2-1/4″ (57mm) thick doors at an additional charge.

CASE: Deadbolt and latch case are formed of steel for strength. Most interior working parts are made of solid brass or steel for maximum strength and smooth operation.

BACKSET: Adjustable backset 2-3/8″ (60mm) or 2-3/4″ (70mm) latch and deadbolt supplied standard.

FACE PLATE: Deadbolt and latch supplied with a 1″ (25mm) face plate.

STRIKE: Deadbolt is furnished with a specially designed reinforcing strike constructed of high grade steel for ultimate strength and durability. The strike is installed with two (2) 3″ (76mm) security jamb screws and a dust box. The security strike is covered with an armored front to conceal the fasteners. The 3″ screws securing the inside face of the double cylinder deadbolt resist tampering and guard against theft. Latches are supplied standard with a full lip strike (other strikes are available at an additional charge.)

BOLT: Deadbolt and latch bolt are constructed of solid brass. Deadbolt has 1″ (25mm) throw when extended and a hardened steel insert for maximum protection and security. Latch bolt has a .5″ (13mm) throw when extended to fully engage the door jamb.

KEYS: Designed with a 1-1/4″ (32mm) wide bow surface.

PACKAGING: All products are packaged in contractor packaging unless noted.

SPLIT FINISH available. Please contact customer service for special order instructions

SECTIONAL TRIM LOCK SETS:

FULLY REVERSIBLE: Accommodates most door conditions and facilitates installation.

DOOR THICKNESS: Lock sets accommodate a door thickness of 1-3/4″ (44mm). Conversion kit available for 2″ (51mm) and 2-1/4″ (57mm) thick doors at an additional charge.

DISTANCE BETWEEN CENTER OF LATCH AND DEADBOLT (CTC): Lockset accommodates any center-to-center dimension greater than 4-3/8″ (111mm).

CYLINDER: Cylinder supplied with 5-pin keying. Cylinder is protected with a free-turning cylinder guard to resist gripping or twisting.

DOOR PREP: Designed to fit 2-1/8″ face bore with no additional hardware.

ESCUTCHEON TRIM LOCK SETS:

FULLY REVERSIBLE: Accommodates most door conditions and facilitates installation.

DOOR THICKNESS: Lock sets accommodate a door thickness of 1-3/4″ (44mm). conversion kit available for 2″ (51mm) and 2-1/4″ (57mm) thick doors at an additional charge (see price list for details).

DISTANCE BETWEEN CENTER OF LATCH AND DEADBOLT(CTC): Lockset accomodates a 5 1/2″ (140mm) center-to-center dimension ONLY.

CYLINDER: Cylinder supplied with 5-pin keying.

EMERGENCY EGRESS TUBULAR ENTRANCE LOCK SETS:

EMERGENCY EGRESS: Handleset which retracts the latchbolt and deadbolt simultaneously when the inside knob/lever is turned. Door will remain unlocked unless locked with a key.

CARTRIDGE: Case and interior working parts are formed of heavy gauge steel, zinc chromate plated and lubricated for maximum strength and smooth operation.

FULLY REVERSIBLE: Accommodates most door conditions and facilitates installation.

DOOR THICKNESS: Lock sets accommodate a door thickness of 1-3/4″ (44mm). Conversion kit available for 2″ (51mm) and 2-1/4″ (57mm) thick doors at an additional charge.

DISTANCE BETWEEN CENTER OF LATCH AND DEADBOLT (CTC): Lockset accommodates 5 1/2″ center-to-center dimension ONLY.

CYLINDER: Cylinder supplied with 5-pin keying.

IMPORTANT: Emergency egress entrance lock sets are designed for use with all Estate knobs or levers.

TWO-POINT LOCK SETS:

DOOR THICKNESS: Lock sets accommodate a door thickness of 1-3/4″(44mm) to 2″ (51mm). Cannot be installed on doors thicker than 2″(51mm).

DISTANCE BETWEEN CENTER OF LATCH AND DEADBOLT (CTC): Lockset accommodates any center-to-center dimension greater than 4-3/4″ (121mm).

CYLINDER: Cylinder supplied with 5-pin keying. Cylinder is protected with a free-turning cylinder guard to resist gripping or twisting.

DOOR PREP: Designed to fit 2-1/8″ face bore with a 3-hole prep.

NOTE: When installing a two-point handleset on a door prepped for a standard single point handleset with a 5 1/2″ CTC boring, the location of the thumb piece will be approximately 2 1/2″ lower.

Numerous patents, copyrights, and trademarks are held by the Corporation to protect the integrity and reputation of our distinctive line of hardware appointments.

Functions Available

ENTRANCE

FROM EXTERIOR:
Thumb piece operates handleset latch; key operates deadbolt.

FROM INTERIOR:
Knob operates latch; key operates deadbolt.

DOUBLE CYLINDER

FROM EXTERIOR:
Thumb piece operates handleset latch; key operates deadbolt.

FROM INTERIOR:
Knob operates latch; key operates deadbolt.

FULL DUMMY

Trim for non-working side of double doors. Matching dummy trim (non-functioning) handleset and interior trim.

Ashton® Two-Point Lock Handleset

w/ 5210 Colonial knob or 5255 Wave lever

Available while supplies last.

Item #	Description	Wt.	003, 033 050, 060, 102 112, 150, 151 190, 260, 264	044, 055, 056 402, 452
85365.xxx.2ENT	Single cylinder handleset with interior knob	9.2	$668	$751
85365.xxx.2DC	Double cylinder handleset with interior knob	8.9	$696	$779
85365.xxx.2FD	Full dummy set with interior knob	8.6	$584	$668
85365.xxx.2RH	Single cylinder handleset with lever – RH Entry	8.8	$668	$751
85365.xxx.2LH	Single cylinder handleset with lever – LH Entry	8.8	$668	$751
85365.xxx.2DCR	Double cylinder handleset with lever – RH Entry	8.5	$696	$779
85365.xxx.2DCL	Double cylinder handleset with lever – LH Entry	8.5	$696	$779
85365.xxx.2RFD	Full dummy set with lever – RH Dummy	8.1	$584	$668
85365.xxx.2LFD	Full dummy set with lever – LH Dummy	8.1	$584	$668

NOTE: 2" thick door maximum.

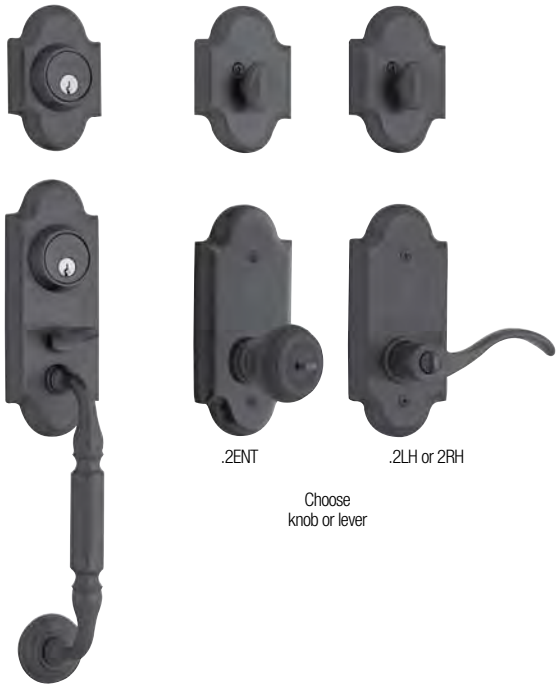

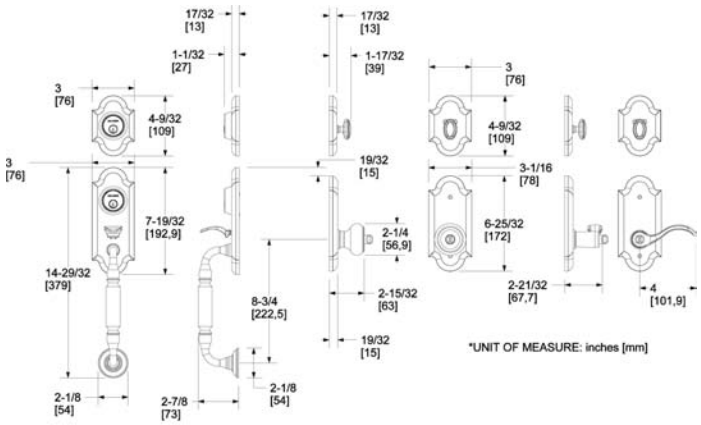

Bethpage® Sectional Trim

w/ 5077 Bethpage knob or 5447V Bethpage lever

QUICK SHIP

Item #	Description	Wt.	003, 031, 033 050, 060, 102 112, 150, 151 190, 260, 264	044, 055, 056 402, 452
85327.xxx.ENTR	Single cylinder handleset with interior knob	5.8	$501	$584
85327.xxx.DBLC	Double cylinder handleset with interior knob	6.1	$529	$612
85327.xxx.FD	Full dummy set with interior knob	4.6	$417	$501
85327.xxx.RENT	Single cylinder handleset with lever – RH Entry	6.8	$501	$584
85327.xxx.LENT	Single cylinder handleset with lever – LH Entry	6.8	$501	$584
85327.xxx.RDBL	Double cylinder handleset with lever – RH Entry	7.1	$529	$612
85327.xxx.LDBL	Double cylinder handleset with lever – LH Entry	7.1	$529	$612
85327.xxx.RFD	Full dummy set with lever – RH Dummy	5.6	$417	$501
85327.xxx.LFD	Full dummy set with lever – LH Dummy	5.6	$417	$501

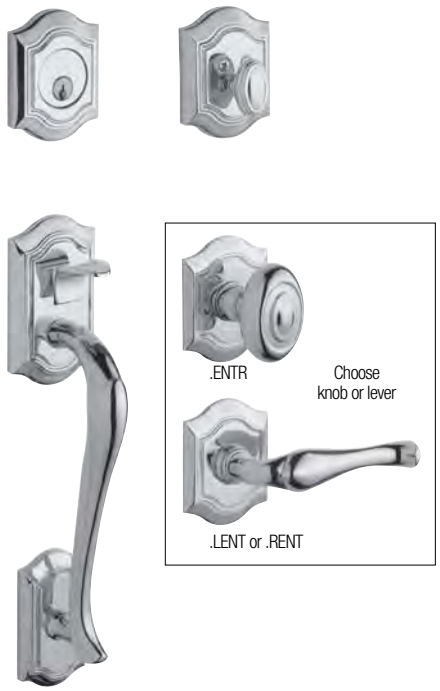

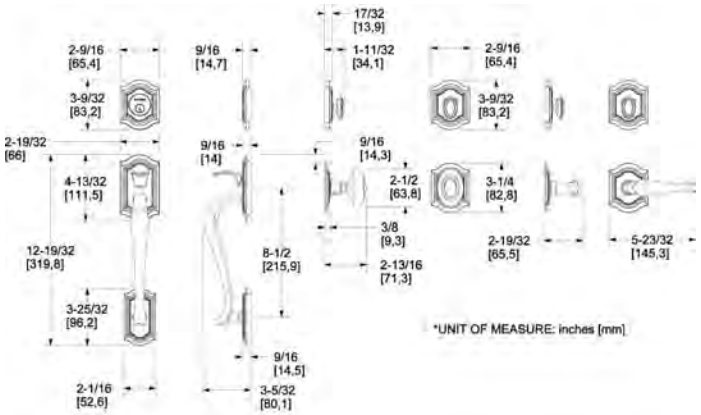

***QUICK SHIP** is available in **limited functions and finishes.**
For complete listing, please refer to page 272.

ENTRANCE SETS, TUBULAR

Bethpage® Emergency Egress Handleset
w/ 5077 Bethpage knob or 5447V Bethpage lever

QUICK SHIP

Item #	Description	Wt.	003, 031, 033 050, 060, 102 112, 150, 151 190, 260, 264	044, 055, 056 402, 452
85337.xxx.ENTR	Single cylinder handleset with interior knob, emergency egress	6.8	$668	$751
85337.xxx.FD	Full dummy set with interior knob	5.4	$584	$668
85337.xxx.RENT	Single cylinder handleset w/ lever, emergency egress – RH Entry	7.8	$668	$751
85337.xxx.LENT	Single cylinder handleset w/ lever, emergency egress – LH Entry	7.8	$668	$751
85337.xxx.RFD	Full dummy set with lever – RH Dummy	6.2	$584	$668
85337.xxx.LFD	Full dummy set with lever – LH Dummy	6.2	$584	$668

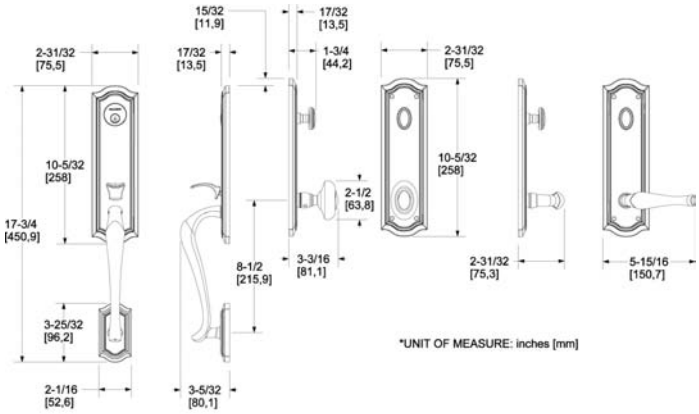

Blakely Emergency Egress Handleset
w/ 5025 Egg knob

QUICK SHIP

Item #	Description	Wt.	003, 031, 033 050, 060, 102 112, 150, 151 190, 260, 264	044, 055, 056 402, 452
85360.xxx.ENTR	Single cylinder handleset with interior knob	6.8	$668	$751
85360.xxx.FD	Full dummy set with interior knob	5.1	$584	$668

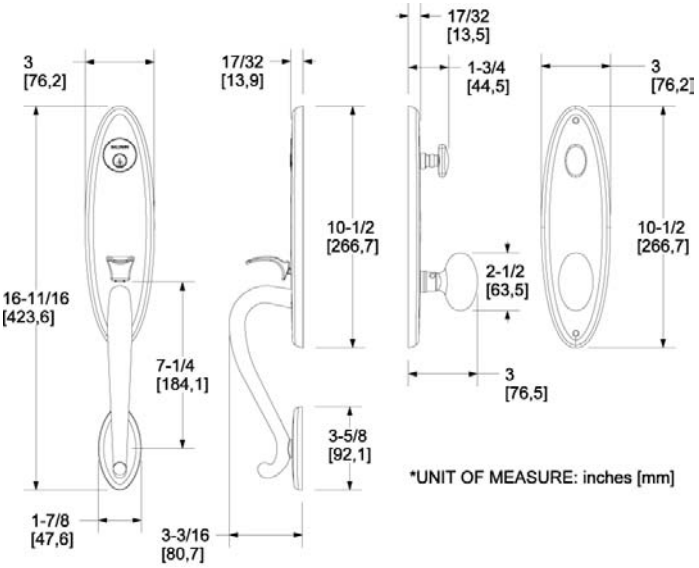

***QUICK SHIP** is available in **limited functions and finishes.**
For complete listing, please refer to page 272.

Boulder ¾ Escutcheon Handleset Emergency Egress

w/ 5024 Oval knob or 5452V Beavertail lever

Item #	Description	Wt.	003, 031, 033 050, 060, 102 112, 150, 151 190, 260, 264	044, 055, 056 402, 452
85354.xxx.ENTR	Single cylinder handleset with interior knob, emergency egress	7.3	$668	$751
85354.xxx.FD	Full dummy set with interior knob	5.7	$584	$668
85354.xxx.RENT	Single cylinder handleset w/ lever, emergency egress – RH Entry	7.3	$668	$751
85354.xxx.LENT	Single cylinder handleset w/ lever, emergency egress – LH Entry	7.3	$668	$751
85354.xxx.RFD	Full dummy set with lever – RH Dummy	5.7	$584	$668
85354.xxx.LFD	Full dummy set with lever – LH Dummy	5.7	$584	$668

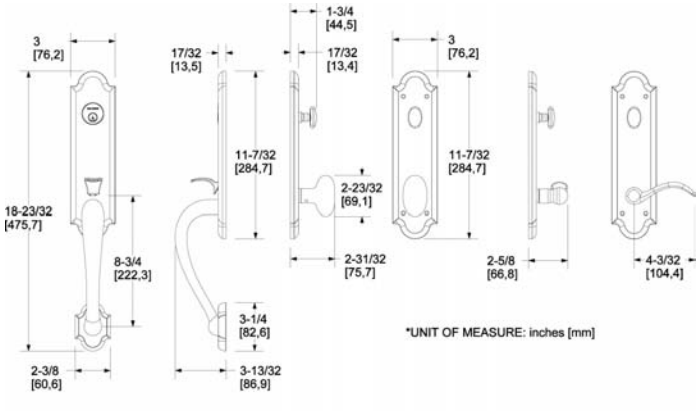

Boulder Full Escutcheon Handleset Emergency Egress

w/ 5024 Oval knob or 5452V Beavertail lever

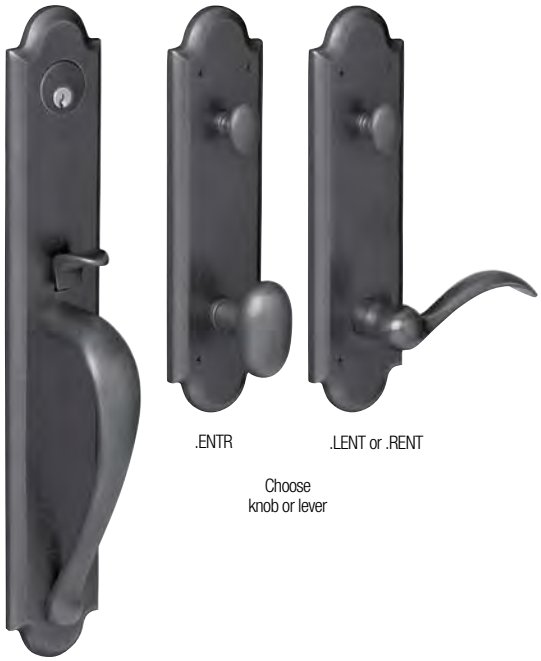

Item #	Description	Wt.	003, 031, 033 050, 060, 102 112, 150, 151 190, 260, 264	044, 055, 056 402, 452
6402.xxx.ENTR	Single cylinder handleset with interior knob, emergency egress	9.2	$723	$806
6402.xxx.FD	Full dummy set with interior knob	7.2	$640	$723
6402.xxx.RENT	Single cylinder handleset w/ lever, emergency egress – RH Entry	9.2	$723	$806
6402.xxx.LENT	Single cylinder handleset w/ lever, emergency egress – LH Entry	9.2	$723	$806
6402.xxx.RFD	Full dummy set with lever – RH Dummy	7.2	$640	$723
6402.xxx.LFD	Full dummy set with lever – LH Dummy	7.2	$640	$723

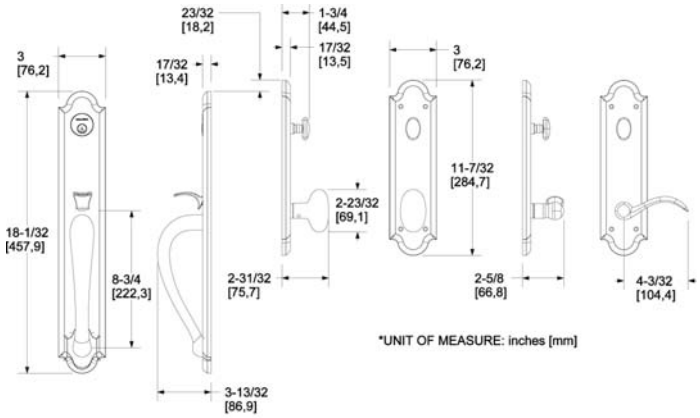

***QUICK SHIP** is available in **limited functions and finishes.**
For complete listing, please refer to page 272.

ENTRANCE SETS, TUBULAR

Bristol Sectional Egress Handleset

w/ 5064 knob

Available while supplies last.

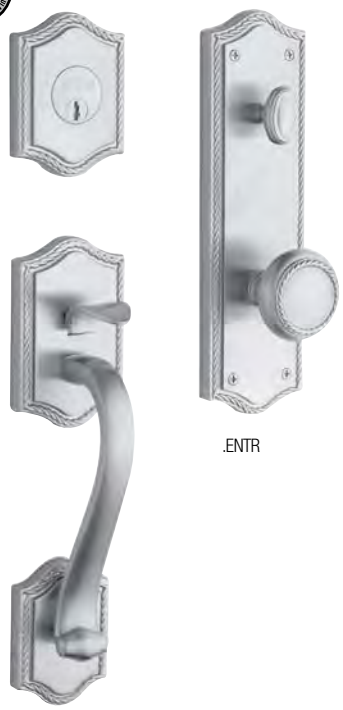

.ENTR

Item #	Description	Wt.	003, 031, 033 050, 060, 102 112, 150, 151 190, 260, 264	044, 055, 056 402, 452
6420.xxx.ENTR	Single cylinder handleset with interior knob	8.7	$612	$696
6420.xxx.FD	Full dummy set with interior knob	6.7	$529	$612

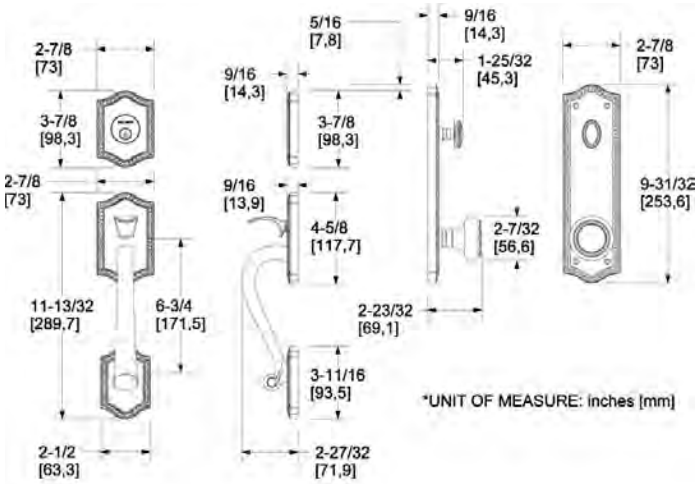

Canterbury Sectional Trim

w/ 5020 Colonial knob or 5455V Wave lever

.ENTR

Choose Knob or Lever for interior

.LENT or .RENT

Item #	Description	Wt.	003, 031, 033 050, 060, 102 112, 150, 151 190, 260, 264	044, 055, 056 402, 452
85305.xxx.ENTR	Single cylinder handleset with interior knob	5.8	$501	$584
85305.xxx.DBLC	Double cylinder handleset with interior knob	6.1	$529	$612
85305.xxx.FD	Full dummy set with interior knob	4.6	$417	$501
85305.xxx.RENT	Single cylinder handleset with lever – RH Entry	6.8	$501	$584
85305.xxx.LENT	Single cylinder handleset with lever – LH Entry	6.8	$501	$584
85305.xxx.RDBL	Double cylinder handleset with lever – RH Entry	7.1	$529	$512
85305.xxx.LDBL	Double cylinder handleset with lever – LH Entry	7.1	$529	$612
85305.xxx.RFD	Full dummy set with lever – RH Dummy	5.6	$417	$501
85305.xxx.LFD	Full dummy set with lever – LH Dummy	5.6	$417	$501

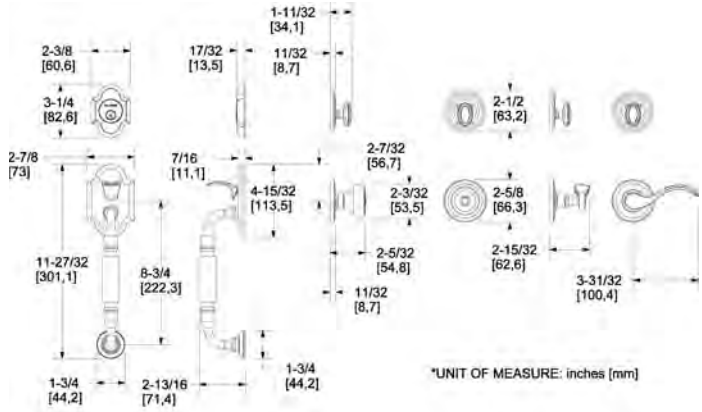

***QUICK SHIP** is available in **limited functions and finishes.**
For complete listing, please refer to page 272.

Cody ¾ Escutcheon Handleset Emergency Egress

w/ 5024 Oval knob or 5452V Beavertail lever

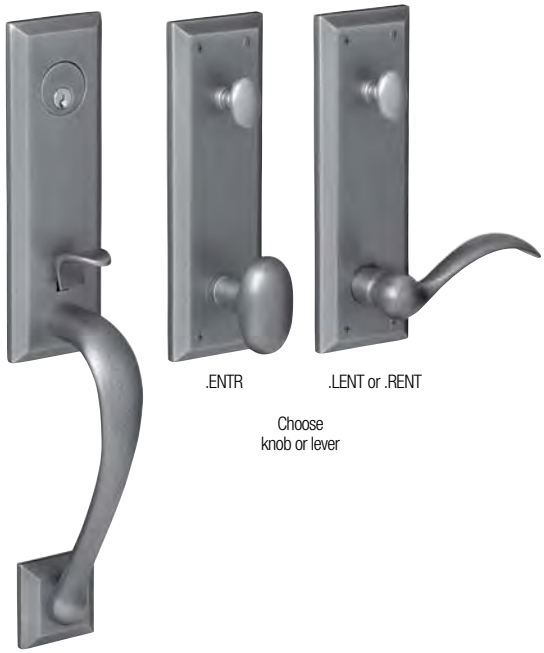

Item #	Description	Wt.	003, 031, 033 050, 060, 102 112, 150, 151 190, 260, 264	044, 055, 056 402, 452
85352.xxx.ENTR	Single cylinder handleset with interior knob, emergency egress	7.3	$668	$751
85352.xxx.FD	Full dummy set with interior knob	5.7	$584	$668
85352.xxx.RENT	Single cylinder handleset w/ lever, emergency egress – RH Entry	7.3	$668	$751
85352.xxx.LENT	Single cylinder handleset w/ lever, emergency egress – LH Entry	7.3	$668	$751
85352.xxx.RFD	Full dummy set with lever – RH Dummy	5.7	$584	$668
85352.xxx.LFD	Full dummy set with lever – LH Dummy	5.7	$584	$668

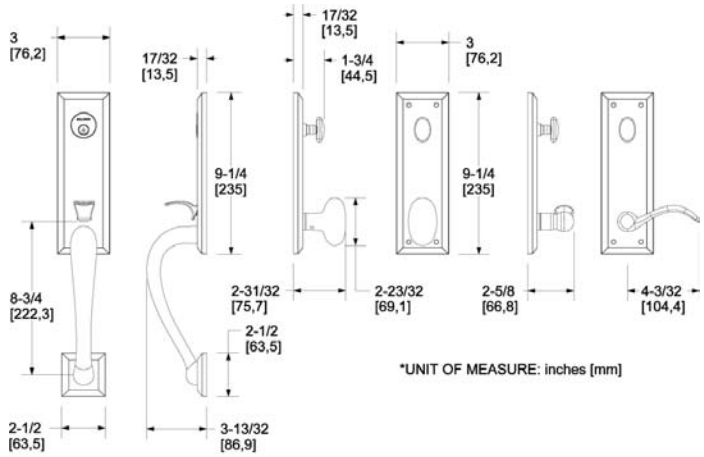

Cody Full Escutcheon Handleset Emergency Egress

w/ 5024 Oval knob or 5452V Beavertail lever

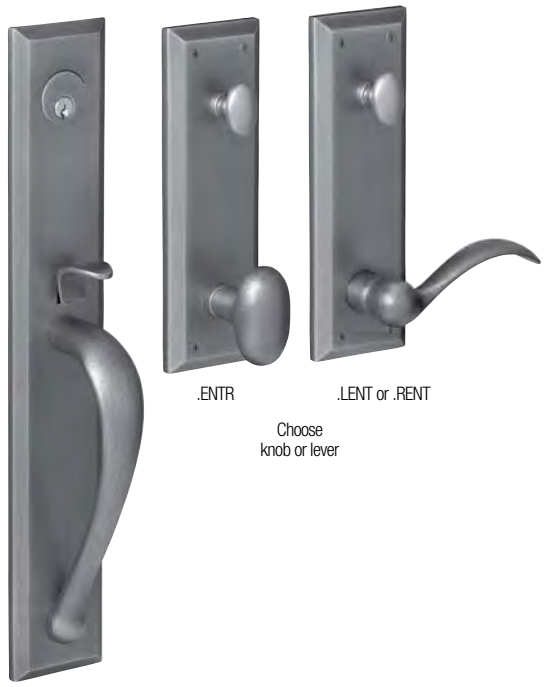

Item #	Description	Wt.	003, 031, 033 050, 060, 102 112, 150, 151 190, 260, 264	044, 055, 056 402, 452
6403.xxx.ENTR	Single cylinder handleset with interior knob, emergency egress	9,2	$723	$806
6403.xxx.FD	Full dummy set with interior knob	7.2	$640	$723
6403.xxx.RENT	Single cylinder handleset w/ lever, emergency egress – RH Entry	9.2	$723	$806
6403.xxx.LENT	Single cylinder handleset w/ lever, emergency egress – LH Entry	9.2	$723	$806
6403.xxx.RFD	Full dummy set with lever – RH Dummy	7.2	$640	$723
6403.xxx.LFD	Full dummy set with lever – LH Dummy	7.2	$640	$723

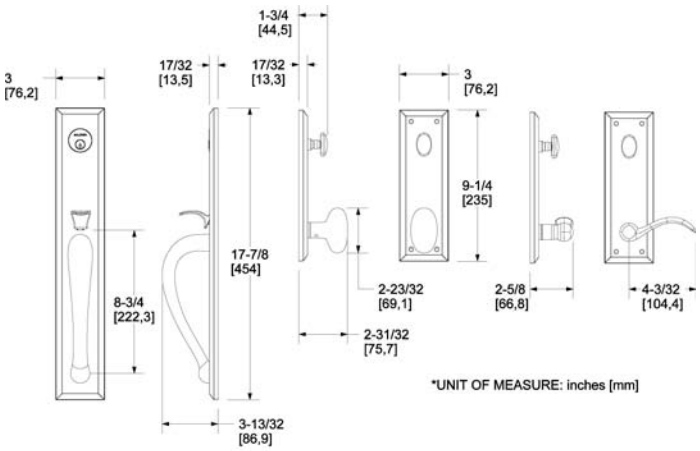

6401 – Devonshire Emergency Egress Handleset
w/5152 Lever

.LENT or .RENT

Item #	Description	Wt.	003, 031, 033 050, 060, 102 112, 150, 151 190, 260, 264	044, 055, 056 402, 452
6401.xxx.RENT	Single cylinder handleset with RIGHT lever, emergency egress	8.3	$723	$806
6401.xxx.LENT	Single cylinder handleset with LEFT lever, emergency egress	8.3	$723	$806
6401.xxx.RFD	Full dummy set with RH Dummy	6.2	$640	$723
6401.xxx.LFD	Full dummy set with LH Dummy	6.2	$640	$723
6401.xxx.ENTR	Single cylinder handleset emergency egress less lever	8.3	$668	$751
6401.xxx.FD	Full dummy set less lever	6.2	$584	$668

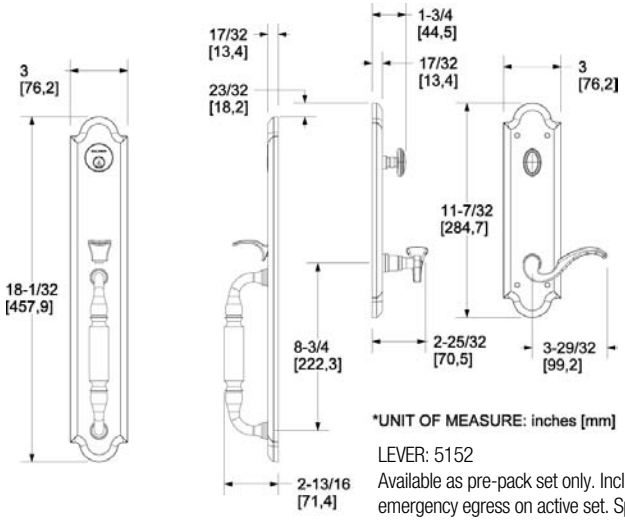

LEVER: 5152
Available as pre-pack set only. Includes emergency egress on active set. Split finish available.

Hollywood Hills Sectional Trim
w/ K008 Knob

Item #	Description	Wt.	003, 031, 033 050, 060, 102 112, 150, 151 190, 260, 264	044, 055, 056 402, 452
85310.xxx.ENTR	Single cylinder handleset with knob	7	$557	$640
85310.xxx.DBLC	Double cylinder handleset w/ knob	7	$584	$668
85310.xxx.FD	Full dummy set with knob	6	$473	$557
85310.xxx.ENTRX	Single cylinder handleset minus knob		$501	$584
85310.xxx.FDX	Full dummy minus knob		$417	$501

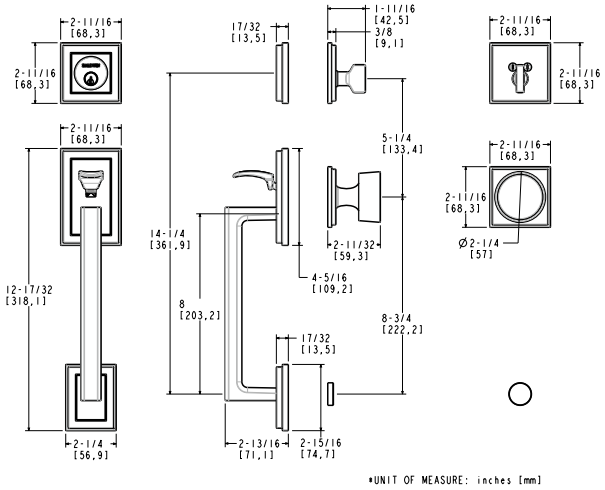

Hollywood Hills Full Escutcheon Handleset
Emergency Egress w/ K008 Knob

Item #	Description	Wt.	003, 031, 033 050, 060, 102 112, 150, 151 190, 260, 264	044, 055, 056 402, 452
85311..xxx.ENTR	Single cylinder handleset with knob	7.3	$834	$918
85311.xxx.FD	Full dummy set with knob	5.7	$751	$834
85311.xxx.ENTRX	Single cylinder handleset minus knob		$779	$862
85311.xxx.FDX	Full dummy minus knob		$696	$779

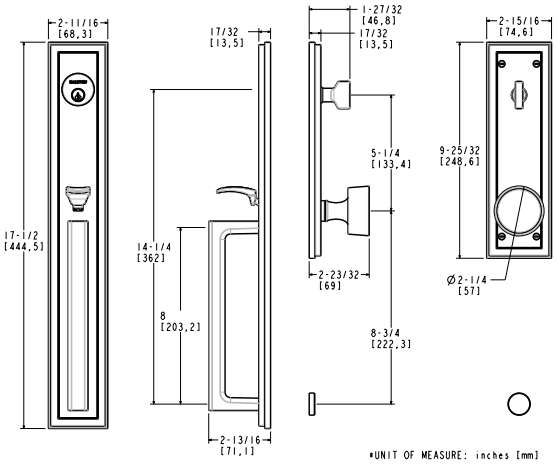

***QUICK SHIP** is available in **limited functions and finishes.**
For complete listing, please refer to page 272.

ENTRANCE SETS, TUBULAR

Kensington Emergency Egress Handleset
w/5108 Lever

.LENT or .RENT

Item #	Description	Wt.	003, 031, 033 050, 060, 102 112, 150, 151 190, 260, 264	044, 055, 056 402, 452
6426.xxx.RENT	Single cylinder handleset with RIGHT lever, emergency egress	10.8	$668	$751
6426.xxx.LENT	Single cylinder handleset with LEFT lever, emergency egress	10.8	$668	$751
6426.xxx.RFD	Full dummy set with RH Dummy	8.5	$584	$668
6426.xxx.LFD	Full dummy set with LH Dummy	8.5	$584	$668

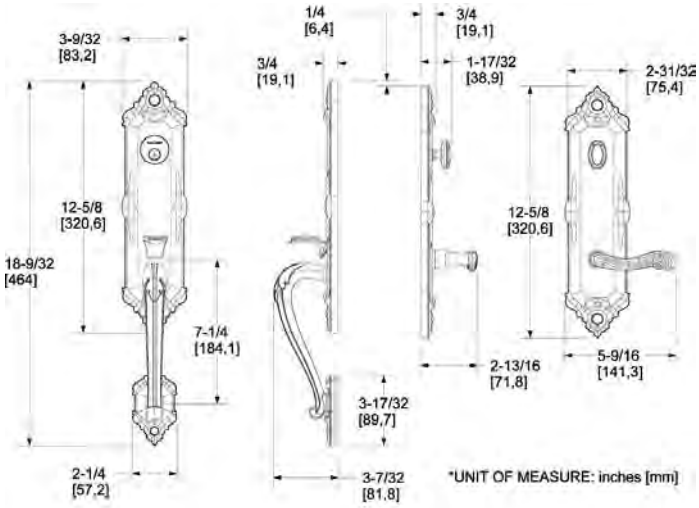

Landon® Two-Point Lock Handleset
w/ 5225 Egg knob or 5255 Wave lever

QUICK SHIP

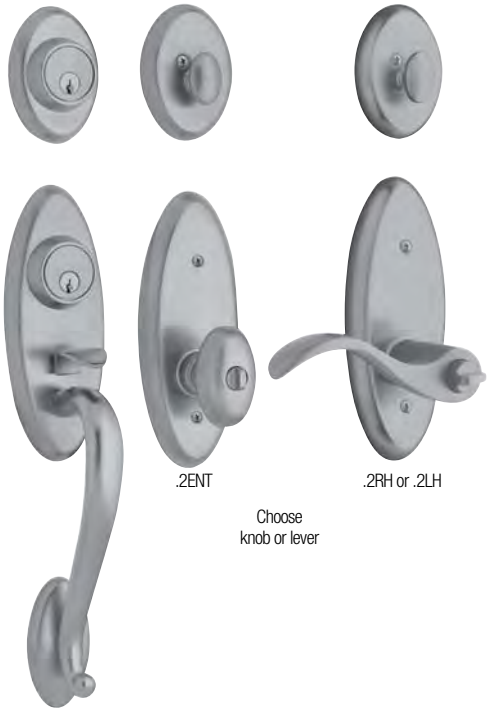

.2ENT .2RH or .2LH

Choose knob or lever

Item #	Description	Wt.	003, 033 050, 060, 102 112, 150, 151 190, 260, 264	044, 055, 056 402, 452
85345.xxx.2ENT	Single cylinder handleset with interior knob	8.8	$668	$751
85345.xxx.2DC	Double cylinder handleset with interior knob	8.6	$696	$779
85345.xxx.2FD	Full dummy set with interior knob	8.1	$584	$668
85345.xxx.2RH	Single cylinder handleset with lever – RH Entry	8.3	$668	$751
85345.xxx.2LH	Single cylinder handleset with lever – LH Entry	8.3	$668	$751
85345.xxx.2DCR	Double cylinder handleset with lever – RH Entry	8.1	$696	$779
85345.xxx.2DCL	Double cylinder handleset with lever – LH Entry	8.1	$696	$779
85345.xxx.2RFD	Full dummy set with lever – RH Dummy	7.7	$584	$668
85345.xxx.2LFD	Full dummy set with lever – LH Dummy	7.7	$584	$668

NOTE: 2" thick door maximum.

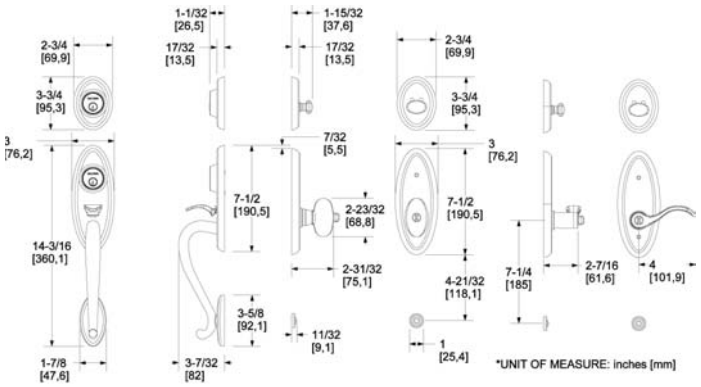

***QUICK SHIP** is available in **limited functions and finishes.**
For complete listing, please refer to page 272.

Logan Sectional Trim
w/ 5015 Classic knob or 5455V Wave lever

QUICK SHIP

Item #	Description	Wt.	003, 031, 033 050, 060, 102 112, 150, 151 190, 260, 264	044, 055, 056 402, 452
85315.xxx.ENTR	Single cylinder handleset with interior knob	5.7	$501	$584
85315.xxx.DBLC	Double cylinder handleset with interior knob	5.8	$529	$612
85315.xxx.FD	Full dummy set with interior knob	4.3	$417	$501
85315.xxx.RENT	Single cylinder handleset with lever – RH Entry	6.7	$501	$584
85315.xxx.LENT	Single cylinder handleset with lever – LH Entry	6.7	$501	$584
85315.xxx.RDBL	Double cylinder handleset with lever – RH Entry	6.8	$529	$612
85315.xxx.LDBL	Double cylinder handleset with lever – LH Entry	6.8	$529	$612
85315.xxx.RFD	Full dummy set with lever – RH Dummy	5.3	$417	$501
85315.xxx.LFD	Full dummy set with lever – LH Dummy	5.3	$417	$501

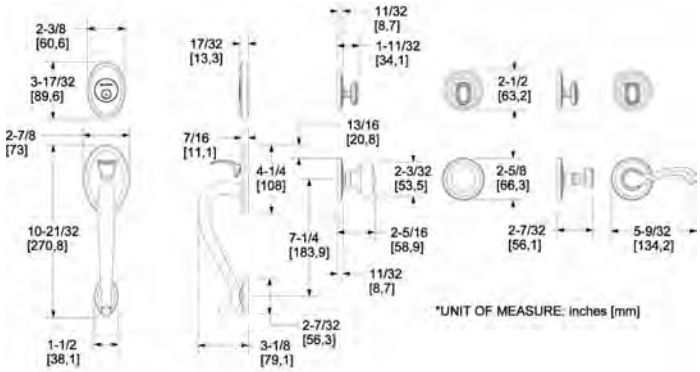

Logan Sectional Trim
w/ 5025 Egg knob

Item #	Description	Wt.	003, 031, 033 050, 060, 102 112, 150, 151 190, 260, 264	044, 055, 056 402, 452
85335.xxx.ENTR	Single cylinder handleset with interior knob	5.7	$501	$584
85335.xxx.DBLC	Double cylinder handleset with interior knob	5.8	$529	$612
85335.xxx.FD	Full dummy set with interior knob	4.3	$417	$501

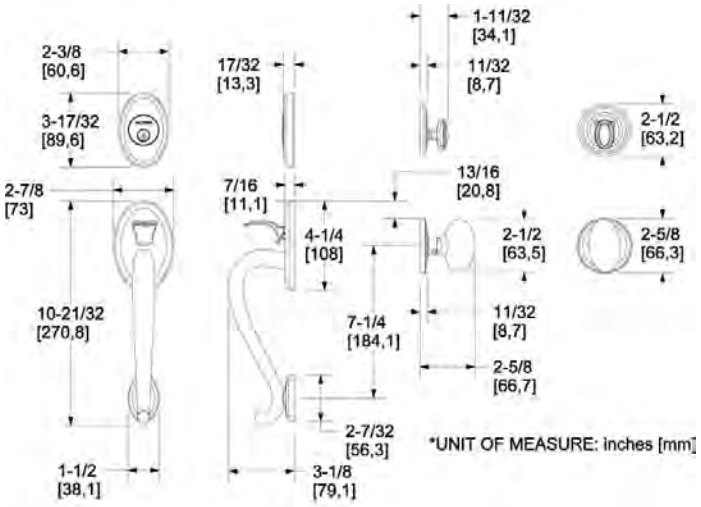

***QUICK SHIP** is available in **limited functions and finishes.**
For complete listing, please refer to page 272.

ENTRANCE SETS, TUBULAR

Madison® Sectional Trim
w/ 5015 Classic knob or 5445V Classic lever

QUICK SHIP

Item #	Description	Wt.	003, 031, 033 050, 060, 102 112, 150, 151 190, 260, 264	044, 055, 056 402, 452
85320.xxx.ENTR	Single cylinder handleset with interior knob	5.6	$501	$584
85320.xxx.DBLC	Double cylinder handleset with interior knob	5.9	$529	$612
85320.xxx.FD	Full dummy set with interior knob	4.2	$417	$501
85320.xxx.RENT	Single cylinder handleset with lever – RH Entry	6.6	$501	$584
85320.xxx.LENT	Single cylinder handleset with lever – LH Entry	6.6	$501	$584
85320.xxx.RDBL	Double cylinder handleset with lever – RH Entry	6.9	$529	$612
85320.xxx.LDBL	Double cylinder handleset with lever – LH Entry	6.9	$529	$612
85320.xxx.RFD	Full dummy set with lever – RH Dummy	5.2	$417	$501
85320.xxx.LFD	Full dummy set with lever – LH Dummy	5.2	$417	$501

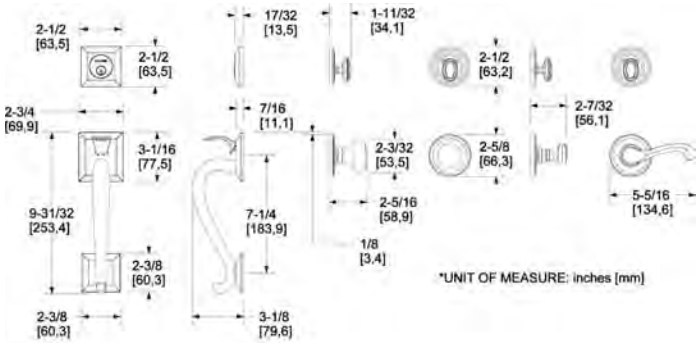

Manchester Emergency Egress Handleset
w/ 5455V Wave lever

QUICK SHIP

Item #	Description	Wt.	003, 031, 033 050, 060, 102 112, 150, 151 190, 260, 264	044, 055, 056 402, 452
85350.xxx.ENTR	Single cylinder handleset – w/ lever, emergency egress-active	5.7	$612	$696
85350.xxx.FD	Full dummy set w/ lever - inactive	4.3	$529	$612
85350.xxx.RENT	Single cylinder handleset w/ lever, emergency egress – RH Entry	8.3	$668	$751
85350.xxx.LENT	Single cylinder handleset w/ lever, emergency egress – LH Entry	8.3	$668	$751
85350.xxx.RFD	Full dummy set with lever – RH Dummy	6.2	$584	$668
85350.xxx.LFD	Full dummy set with lever – LH Dummy	6.2	$584	$668

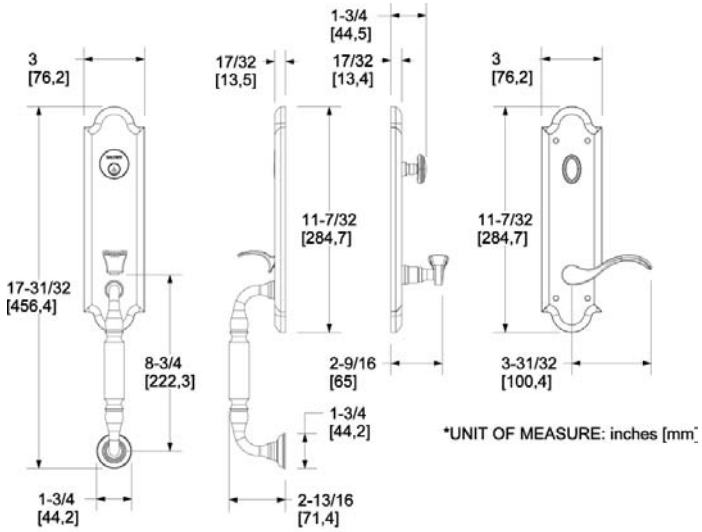

Minneapolis® Sectional Trim
w/ 5162 lever

QUICK SHIP

.RENT OR .LENT

Item #	Description	Wt.	003, 031, 033 050, 060, 102 112, 150, 151 190, 260, 264	044, 055, 056 402, 452
85390.xxx.RENT	Single cylinder handleset with lever – RH Entry	6.8	$501	$584
85390.xxx.LENT	Single cylinder handleset with lever – LH Entry	6.8	$501	$584
85390.xxx.RDBL	Double cylinder handleset w/ Lever – RH Entry	7.2	$529	$612
85390.xxx.LDBL	Double cylinder handleset w/ Lever – LH Entry	7.2	$529	$612
85390.xxx.RFD	Full dummy set with lever – RH Dummy	5.6	$417	$501
85390.xxx.LFD	Full dummy set with lever – LH Dummy	5.6	$417	$501
85390.xxx.ENTRX	Single cylinder handleset minus lever		$445	$529
85390.xxx.FDX	Full dummy minus lever		$361	$445

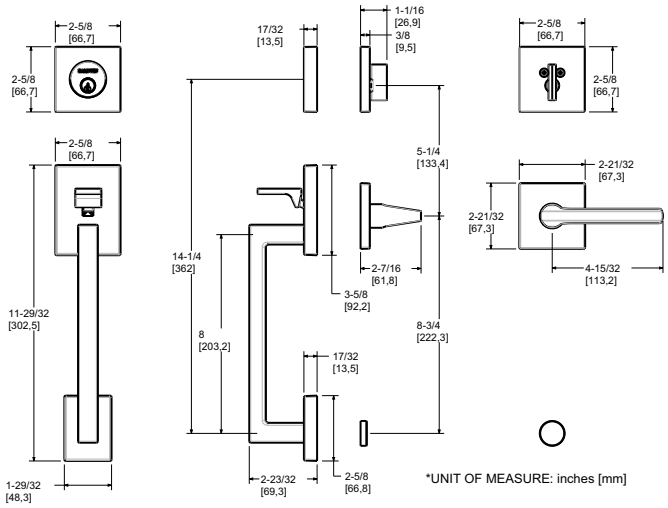

Minneapolis™ ¾ Escutcheon Handleset Emergency Egress w/ 5162 lever

QUICK SHIP

.LENT or .RENT

Item #	Description	Wt.	003, 031, 033 050, 060, 102 112, 150, 151 190, 260, 264	044, 055, 056 402, 452
85391.xxx.RENT	Single cylinder handleset w/ lever, emergency egress – RH Entry	7.3	$668	$751
85391.xxx.LENT	Single cylinder handleset w/ lever, emergency egress – LH Entry	7.3	$668	$751
85391.xxx.RFD	Full dummy set with lever – RH Dummy	5.7	$584	$668
85391.xxx.LFD	Full dummy set with lever – LH Dummy	5.7	$584	$668
85391.xxx.ENTRX	Single cylinder handleset minus lever		$612	$696
85391.xxx.FDX	Full dummy set minus lever		$529	$612

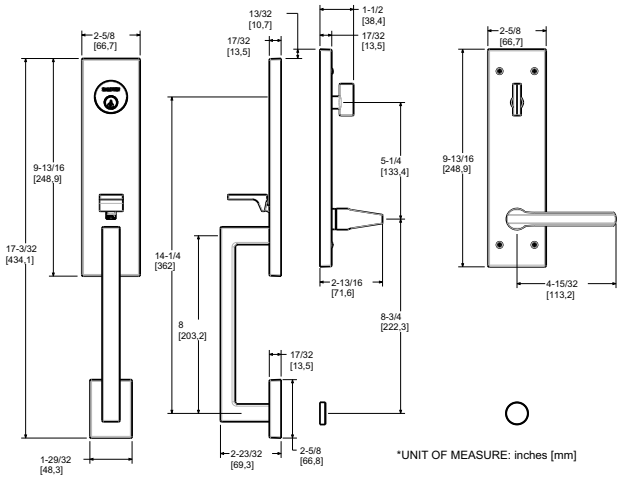

ENTRANCE SETS, TUBULAR

Minneapolis™ Full Escutcheon Handleset Emergency Egress w/ 5162 lever

QUICK SHIP

AVAILABLE IN: MORTISE, TUBULAR, EXTERIOR

.LENT or .RENT

Item #	Description	Wt.	003, 031, 033 050, 060, 102 112, 150, 151 190, 260, 264	044, 055, 056 402, 452
85392.xxx.RENT	Single cylinder handleset w/ lever, emergency egress – RH Entry	9.2	$723	$806
85392.xxx.LENT	Single cylinder handleset w/ lever, emergency egress – LH Entry	9.2	$723	$806
85392.xxx.RFD	Full dummy set with lever – RH Dummy	7.2	$640	$723
85392.xxx.LFD	Full dummy set with lever – LH Dummy	7.2	$640	$723
85392.xxx.ENTRX	Single cylinder handleset minus lever		$668	$751
85392.xxx.FDX	Full dummy set minus lever		$584	$668

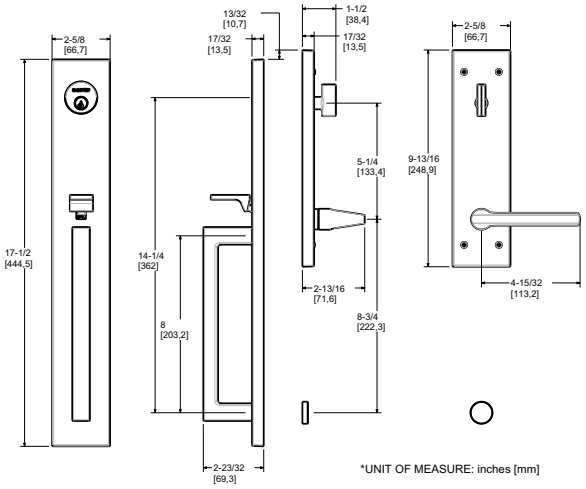

Palm Springs™ w/ L024 Lever

Available while supplies last.

.RENT OR .LENT

Item #	Description	Wt.	003, 031, 033 050, 060, 102 112, 150, 151 190, 260, 264	044, 055, 056 402, 452
85395.xxx.RENT	Single cylinder handleset w/ Lever – RH Entry	6.8	$501	$584
85395.xxx.LENT	Single cylinder handleset w/ Lever – LH Entry	6.8	$501	$584
85395.xxx.RDBL	Double cylinder handleset w/ Lever – RH Entry	7.2	$529	$612
85395.xxx.LDBL	Double cylinder handleset w/ Lever – LH Entry	7.2	$529	$612
85395.xxx.RFD	Full dummy set w/ Lever – RH Dummy	5.6	$417	$501
85395.xxx.LFD	Full dummy set w/ Lever – LH Dummy	5.6	$417	$501
85395.xxx.ENTRX	Single cylinder handleset minus lever		$445	$529
85395.xxx.FDX	Full dummy set minus lever		$361	$445

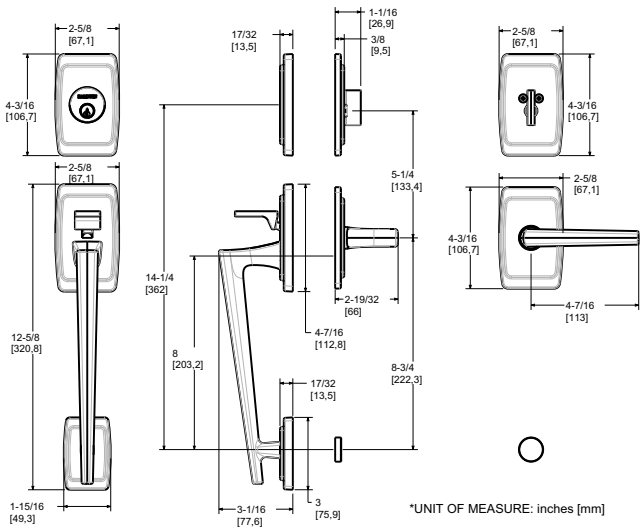

Palm Springs™ ¾ Escutcheon Handleset Emergency Egress
w/ L024 lever

Item #	Description	Wt.	003, 031, 033 050, 060, 102 112, 150, 151 190, 260, 264	044, 055, 056 402, 452
85396.xxx.RENT	Single cylinder handleset w/ lever, emergency egress – RH Entry	7.3	$668	$751
85396.xxx.LENT	Single cylinder handleset w/ lever, emergency egress – LH Entry	7.3	$668	$751
85396.xxx.RFD	Full dummy set with lever – RH Dummy	5.7	$584	$668
85396.xxx.LFD	Full dummy set with lever – LH Dummy	5.7	$584	$668
85396.xxx.ENTRX	Single cylinder handleset minus lever		$612	$696
85396.xxx.FDX	Full dummy set minus lever		$529	$612

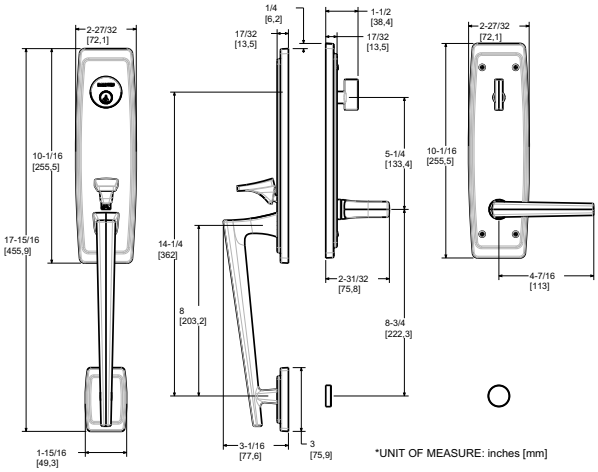

Palm Springs™ Full Escutcheon Handleset Emergency Egress
w/ L024 lever

Item #	Description	Wt.	003, 031, 033 050, 060, 102 112, 150, 151 190, 260, 264	044, 055, 056 402, 452
85397.xxx.RENT	Single cylinder handleset w/ lever, emergency egress – RH Entry	9.2	$723	$806
85397.xxx.LENT	Single cylinder handleset w/ lever, emergency egress – LH Entry	9.2	$723	$806
85397.xxx.RFD	Full dummy set with lever – RH Dummy	7.2	$640	$723
85397.xxx.LFD	Full dummy set with lever – LH Dummy	7.2	$640	$723
85397.xxx.ENTRX	Single cylinder handleset minus lever		$668	$751
85397.xxx.FDX	Full dummy set minus lever		$584	$668

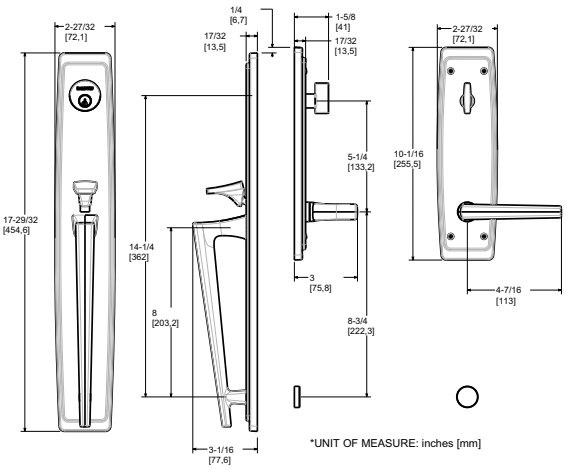

***QUICK SHIP** is available in **limited functions and finishes.**
For complete listing, please refer to page 272.

ENTRANCE SETS, TUBULAR

Soho® ¾ Escutcheon Handleset Emergency Egress w/ 5485V lever

QUICK SHIP

.RENT or .LENT

Item #	Description	Wt.	003, 031, 033 050, 060, 102 112, 150, 151 190, 260, 264	044, 055, 056 402, 452
85387.xxx.RENT	Single cylinder handlesetw/ Lever – RH Entry, Emegency Egress	7.8	$668	$751
85387.xxx.LENT	Single cylinder handlesetw/ Lever – LH Entry, Emegency Egress	7.8	$668	$751
85387.xxx.RFD	Full dummy set w/ Lever – RH Dummy	6.2	$584	$668
85387.xxx.LFD	Full dummy set w/ Lever – LH Dummy	6.2	$584	$668

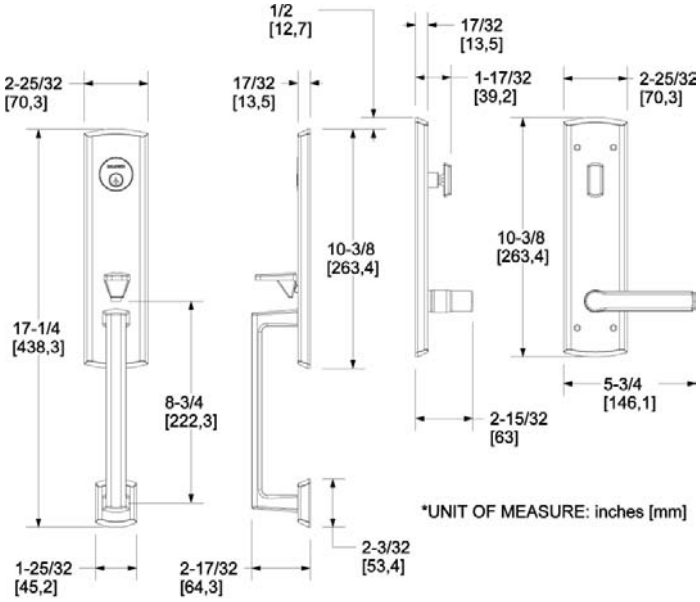

Soho® Sectional Trim w/ 5485V lever

.RENT or .LENT

Item #	Description	Wt.	003, 031, 033 050, 060, 102 112, 150, 151 190, 260, 264	044, 055, 056 402, 452
85386.xxx.RENT	Single cylinder handleset w/Lever – RH Entry	6.8	$501	$584
85386.xxx.LENT	Single cylinder handleset w/Lever – LH Entry	6.8	$501	$584
85386.xxx.RDBL	Double cylinder handleset w/Lever – RH Entry	7.1	$529	$612
85386.xxx.LDBL	Double cylinder handleset w/Lever – LH Entry	7.1	$529	$612
85386.xxx.RFD	Full dummy set w/Lever – RH Dummy	5.6	$417	$501
85386.xxx.LFD	Full dummy set w/Lever – LH Dummy	5.6	$417	$501

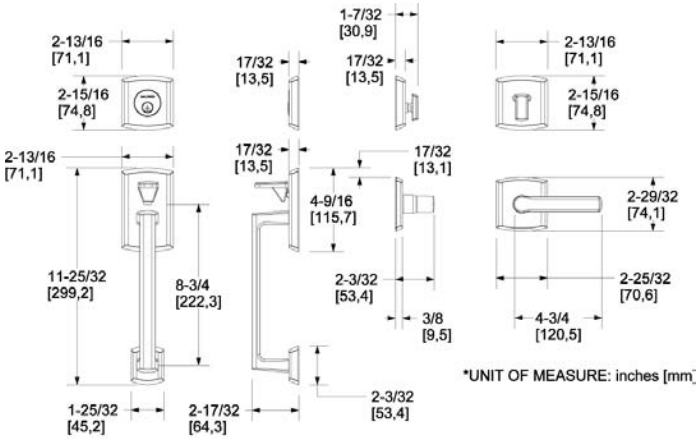

Soho® Two-Point Lock Handleset
w/ Soho lever

QUICK SHIP

.2LH or 2 RH

Item #	Description	Wt.	003, 031 033, 050, 102 112, 150, 151 190, 260, 264	044, 055, 056 402, 452
85385.xxx.2RH	Single cylinder handleset with lever – RH Entry	9.7	$668	$751
85385.xxx.2LH	Single cylinder handleset with lever – LH Entry	9.7	$668	$751
85385.xxx.2DCR	Double cylinder handleset with lever – RH Entry	9.4	$696	$779
85385.xxx.2DCL	Double cylinder handleset with lever – LH Entry	9.4	$696	$779
85385.xxx.2RFD	Full dummy set with lever – RH Dummy	8.9	$584	$668
85385.xxx.2LFD	Full dummy set with lever – LH Dummy	8.9	$584	$668

NOTE: 2" thick door maximum.

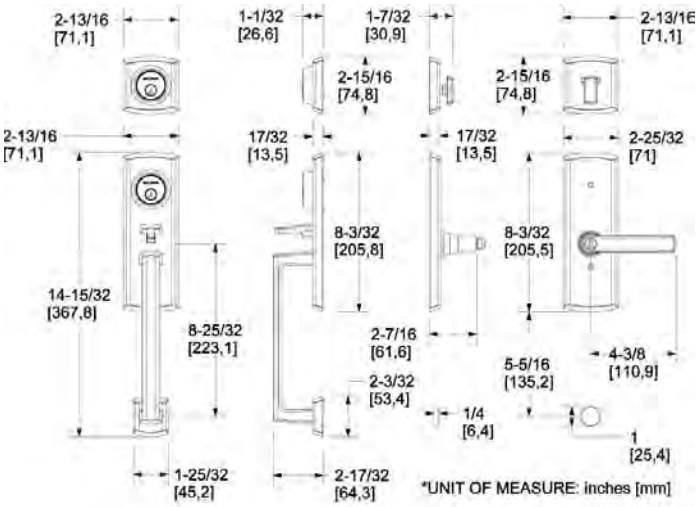

Stonegate Emergency Egress Handleset
w/ 5445V Classic lever

QUICK SHIP

.LENT or .RENT

Item #	Description	Wt.	003, 031, 033 050, 060, 102 112, 150, 151 190, 260, 264	044, 055, 056 402, 452
85355.xxx.ENTR	Single cylinder handleset – less lever, emergency egress - active	5.7	$612	$696
85355.xxx.FD	Full dummy set less lever - inactive	4.3	$529	$612
85355.xxx.RENT	Single cylinder handleset w/ lever, emergency egress – RH Entry	8.1	$668	$751
85355.xxx.LENT	Single cylinder handleset w/ lever, emergency egress – LH Entry	8.1	$668	$751
85355.xxx.RFD	Full dummy set with lever – RH Dummy	5.9	$584	$668
85355.xxx.LFD	Full dummy set with lever – LH Dummy	5.9	$584	$668

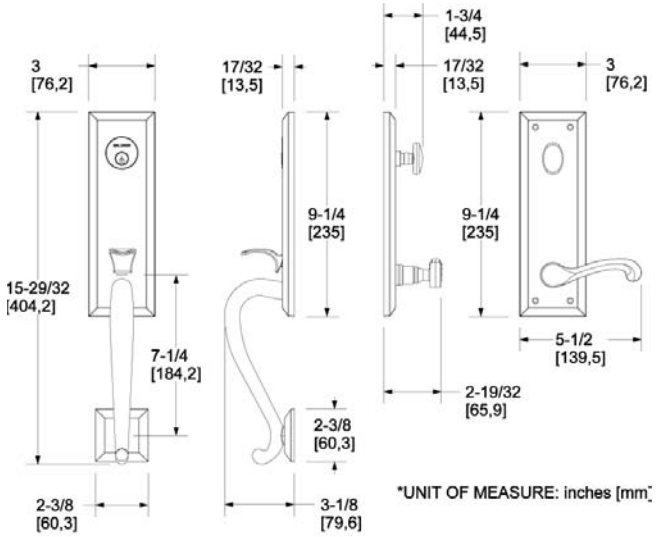

***QUICK SHIP** is available in **limited functions and finishes.**
For complete listing, please refer to page 272.

ENTRANCE SETS, TUBULAR

5210 & 5300 Replacement Latches

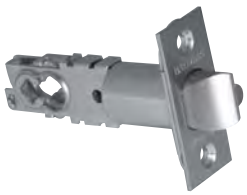

Universal Deadlocking Latch for Keyed Entry

Item #	Adjustable Backset	Front Length	Front Width	Decription	Price
5210.xxx	2.375″ (60mm) 2.75″ (70mm)	2.25″ (57mm)	1″ (25mm)	Deadlocking Latch Bolt	$53

FEATURES: Latch bolts have a .5″ throw, are reversible and can be used on beveled doors. Latches are supplied with 1″ (25mm) face plates.

PACKED: One per box with strike, fasteners and template

Adjustable Latch for Tubular Handlesets

Item #	Description		
5300.xxx.9	Adjustable Latch	$48	$51

5398 – Thick Door Kits for Old Mechanics

Available while supplies last.

Item #	Description	Std. Box	Wt.	050, 102 112, 150, 151 190, 260, 264	402 452
5398.xxx.A*	For Sectional & Escutcheon Entrance (ENTR) function handlesets with Knobs to fit 2″ & 2 ¼″ thick doors	1	0.3	$53	-
5398.xxx.B*	For Sectional & Escutcheon Double Cylinder (DBLC) function handlesets with Knobs to fit 2″ & 2 ¼″ thick doors	1	0.4	$53	-
5398.xxx.C	For all Emergency Egress handlesets (ENTR, RENT, LENT) to fit 2″ & 2 ¼″ thick doors	1	0.4	$53	-
5398.xxx.D	For Sectional, Escutcheon and Emergency Egress Dummy (FD, LRFD) handlesets to fit 2″ & 2 ¼″ thick doors	1	0.1	$18	-
5398.xxx.G	For Sectional and Escutcheon Entrance (RENT, LENT) function handlesets with Levers to fit 2″ & 2 ¼″ thick doors	1	0.3	$53	-
5398.xxx.H	For Sectional and Escutcheon Double Cylinder (RDBL, LDBL) function handlesets with Levers to fit 2″ & 2 ¼″ thick doors	1	0.4	$53	-

5399 – Thick Door Kits for New Mechanics

QUICK SHIP

Item #	Description	Std. Box	Wt.	003, 050, 102 112, 150, 151 190, 260, 264	402 452
5399.xxx.A	For all Sectional and Escutcheon Single Cylinder Entrance function handlesets and all Evolved products to fit 2″ & 2 ¼″ thick door	1	0.3	$53	-
5399.xxx.B	For all Sectional and Escutcheon Double Cylinder Entrance handlesets to fit 2″ & 2 ¼″ thick doors	1	0.4	$53	-
5399.xxx.C	For all Emergency Egress function handlesets to fit 2″ & 2 ¼″ thick doors	1	0.3	$53	-
5399.xxx.D	For all Full Dummy handle functions -- Sectional, Escutcheon and Emergency Egress to fit 2″ & 2 ¼″ thick doors	1	0.1	$18	-

Features: Each conversion kit includes tailpieces (if necessary), thru-bolts, strike plate, and instructions for modifying sets for use on doors either 2″ (51mm) or 2 ¼″ (57mm) in thickness. (Must specify finish.)

Weight: .21 lbs. (.09kg)

5399 – Repair Kits for New Mechanics

Item #	Description	Std. Box	Wt.	003, 050, 102 112, 150, 151 190, 260, 264	402 452
5399.xxx.G*	For active Sectional and Escutcheon handlesets with Interior Knobs including Single Cylinder (ENTR) and Double Cylinder (DBLC) sets	1	1.1	$53	$52
5399.xxx.H*	For active Sectional and Escutcheon handlesets with Interior Levers including Single Cylinder (LHRH) and Double Cylinder (LRDB) sets	1	1.3	$53	$52
5399.xxx.K*	For Full Dummy (FD or LRFD) Sectional, Escutcheon, and Emergency Egress handlesets with a Traditional oval thumbpiece including Interior Knobs or Levers	1	0.7	$41	$41
5399.xxx.M	For active Emergency Egress handlesets (ENTR) with an oval egress cartridge, a Traditional oval thumbpiece, and an Interior Knob	1	2.0	$53	$52
5399.xxx.N	For active Emergency Egress handlesets (LENT or RENT) with a rectangular egress cartridge, a Traditional oval thumbpiece, and an Interior Lever	1	2.0	$53	$52

NOTE: All parts must be installed for proper lock function.

***QUICK SHIP** is available in **limited functions and finishes.**
For complete listing, please refer to page 272.

NOTES

EVOLVED SMART LOCKSETS

BALDWIN®

EVOLVED™

Smart Never Looked So Beautiful

EXPERIENCE THE BOLD EVOLUTION OF LUXURY HARDWARE WITH BALDWIN EVOLVED, THE NEXT GENERATION OF SMART HANDLESETS AND DEADBOLTS BLENDING EXQUISITE ARCHITECTURAL DESIGNS WITH KEVO TECHNOLOGY.

- Available in 18 Estate tubular handleset styles and 18 finishes, three deadbolts and four interior trims
- Touch-to-open Bluetooth technology and key fob access offers convenience and peace of mind
- Easy-to-use app provides eKeys for remote access, real-time access history and remote unlocking abilities
- Evolved connects through advanced bridge technology allowing users to easily open and close doors via their smartphone and the Kevo mobile app
- Evolved's streamlined design easily conceals the technology in a smart, sleek design that is 60 percent smaller than other electronic products on the market.
- With military grade PKI encryption, Evolved meets the highest security standards
- Evolved features "inside/out" technology, identifying whether the user is inside or outside of the home to prevent any unauthorized access

---

SPECIFICATION

SOLID BRASS: Entrance handle, cylinder collar, knob/lever, rose and turn piece are manufactured of solid brass for maximum strength and durability.

INSTALLATION: Estate lock sets are designed for easy installation in standard pre-bored wood or metal doors. The adaptor aligns the latch with the trim. Graphic instructions make installation FAST!

DOOR THICKNESS: Lock sets accommodate a door thickness of 1-3/4″ (44mm). Conversion kit available for 2″ (51mm) and 2-1/4″ (57mm) thick doors at an additional charge.

CASE: Deadbolt and latch case are formed of steel for strength. Most interior working parts are made of solid brass or steel for maximum strength and smooth operation.

BACKSET: Adjustable backset 2-3/8″ (60mm) or 2-3/4″ (70mm) latch and deadbolt supplied standard.

FACE PLATE: Deadbolt and latch supplied with a 1″ (25mm) face plate.

STRIKE: Deadbolt is furnished with a specially designed reinforcing strike constructed of high grade steel for ultimate strength and durability. The strike is installed with two (2) 3″ (76mm) security jamb screws and a dust box. The security strike is covered with an armored front to conceal the fasteners. The 3″ screws securing the inside face of the double cylinder deadbolt resist tampering and guard against theft. Latches are supplied standard with a full lip strike (other strikes are available at an additional charge).

BOLT: Deadbolt and latch bolt are constructed of solid brass. Deadbolt has 1″ (25mm) tapered throw when extended and a hardened steel insert for maximum protection and security. Latch bolt has a .5″ (13mm) throw when extended to fully engage the door jamb.

KEYS: Designed with a 1-1/4″ (32mm) wide bow surface.

PACKAGING: All products are packaged in contractor packaging.

SPLIT FINISH: available by ordering inside (IS) and outside (OS) trims a la carte. Please contact customer service for special order instructions

DISTANCE BETWEEN CENTER OF LATCH AND DEADBOLT (CTC): Sectional lockset accommodates any center-to-center dimension greater than 4-3/8″ (111mm). ¾ and Full escutcheon handlesets accomodates a 5 1/2″ (140mm) center-to-center dimension ONLY.

CYLINDER: Cylinder supplied with 5-pin keying.

DOOR PREP: Designed to fit 2-1/8″ face bore with no additional hardware.

POWER: lockset required (4) AA batteries (supplied)

SMART DEVICES: are required for ekeys and notifications. Please visit Baldwinhardware.com for the latest information in supported devices.

FOBS: are available a la carte. EVOLVED handlesets/deadbolt do not include FOB, they must be purchased separately.

WARRANTY: EVOLVED products comes with a lifetime mechanical and standard ESTATE finish warranty along with a 1 year electronic warranty to the original residential user of the product against defects in material and workmanship as long as the original user occupies the residential premises upon which the product was originally installed. This warranty does not cover scratches, abrasions, deterioration due to the use of paints, solvents or other chemicals, abuse, misuse, or product used in commercial applications.

EVOLVED ENTRANCE SETS

Bethpage® Evolved Handleset
w/ 5077 Bethpage knob or 5447V Bethpage lever

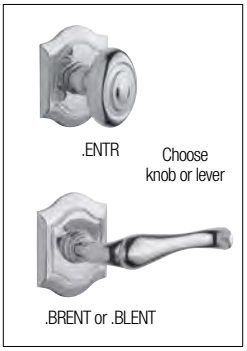

Item #	Description	Wt.	003, 031, 033 050, 060, 102 112, 150, 151 190, 260, 264	044, 055, 056 402, 452
85337.xxx.BENTR	EVOLVED Single Cylinder Smart Lock with interior Knob	10.7	$1,128	$1,223
85337.xxx.BRENT	EVOLVED Single Cylinder Smart Lock with interior Lever	10.7	$1,128	$1,223
85337.xxx.BLENT	EVOLVED Single Cylinder Smart Lock with interior Lever	10.7	$1,128	$1,223
85337.xxx.BOS	EVOLVED Single Cylinder Smart Lock - exterior trim only	5.3	$640	$677
85337.xxx.BISX	EVOLVED interior trim with mechanics minus lever	5.4	$426	$483
85337.xxx.BFD	EVOLVED Full Dummy with interior Knob	7.7	$752	$846
85337.xxx.BRFD	EVOLVED Full Dummy with interior Lever	7.7	$752	$846
85337.xxx.BLFD	EVOLVED Full Dummy with interior Lever	7.7	$752	$846
85337.xxx.OSFD	EVOLVED Full Dummy - exterior trim only	5.3	$458	$514
85337.xxx.ISFDX	EVOLVED Full Dummy - interior trim only minus lever	5.3	$233	$270

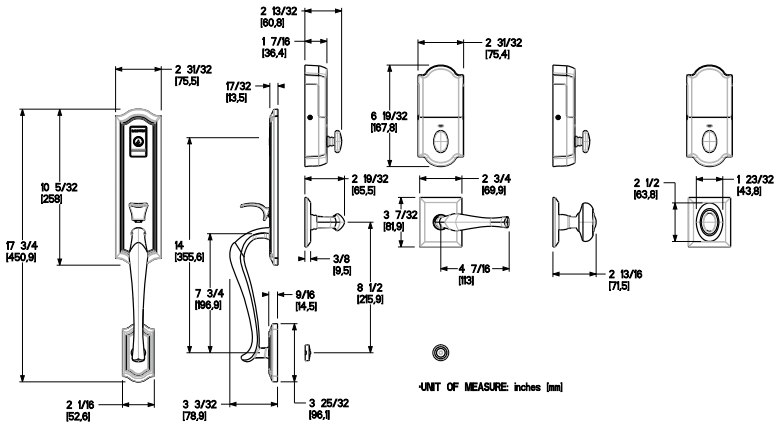

Blakely Evolved Handleset
w/ 5025 Egg knob

Item #	Description	Wt.	003, 031, 033 050, 060, 102 112, 150, 151 190, 260, 264	044, 055, 056 402, 452
85360.xxx.BENTR	EVOLVED Single Cylinder Smart Lock with interior Knob	10.7	$1,128	$1,223
85360.xxx.BOS	EVOLVED Single Cylinder Smart Lock - exterior trim only	5.3	$640	$677
85360.xxx.BISX	EVOLVED interior trim with mechanics minus lever	5.4	$426	$483
85360.xxx.BFD	EVOLVED Full Dummy with interior Knob	7.7	$752	$846
85360.xxx.OSFD	EVOLVED Full Dummy - exterior trim only	5.3	$458	$514
85360.xxx.ISFDX	EVOLVED Full Dummy - interior trim only minus lever	5.3	$233	$270

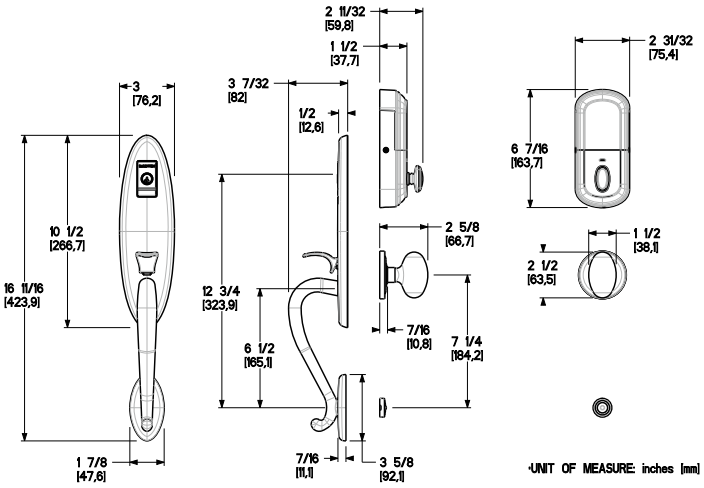

Boulder Evolved Sectional Handleset
w/ 5452v lever

Item #	Description	Wt.	003, 031, 033 050, 060, 102 112, 150, 151 190, 260, 264	044, 055, 056 402, 452
85353.xxx.BRENT	EVOLVED Single Cylinder Smart Lock with interior Lever	10.7	$940	$1,034
85353.xxx.BLENT	EVOLVED Single Cylinder Smart Lock with interior Lever	10.7	$940	$1,034
85353.xxx.BOS	EVOLVED Single Cylinder Smart Lock - exterior trim only	6.8	$451	$489
85353.xxx.BISX	EVOLVED interior trim with mechanics minus lever	8.2	$426	$483
85353.xxx.BRFD	EVOLVED Full Dummy with interior Lever	6.5	$564	$658
85353.xxx.BLFD	EVOLVED Full Dummy with interior Lever	6.5	$564	$658
85353.xxx.OSFD	EVOLVED Full Dummy - exterior trim only	6.8	$270	$326
85353.xxx.ISFDX	EVOLVED Full Dummy - interior trim only minus lever	6.8	$233	$270

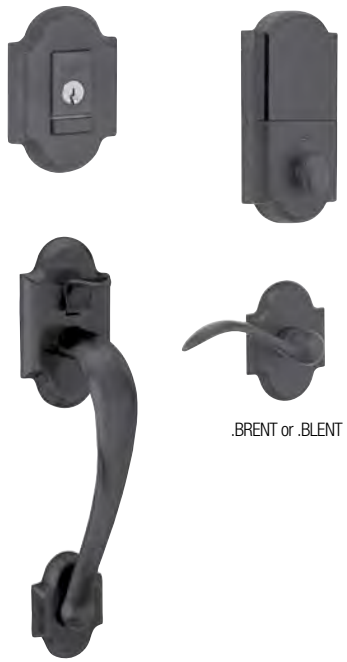

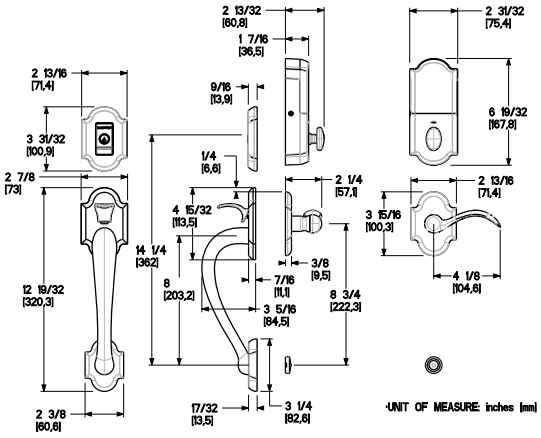

Boulder Evolved ¾ Escutcheon Handleset
w/ 5024 Oval knob or 5452V Beavertail lever

Item #	Description	Wt.	003, 031, 033 050, 060, 102 112, 150, 151 190, 260, 264	044, 055, 056 402, 452
85354.xxx.BENTR	EVOLVED Single Cylinder Smart Lock with interior Knob	10.7	$1,128	$1,223
85354.xxx.BRENT	EVOLVED Single Cylinder Smart Lock with interior Lever	10.7	$1,128	$1,223
85354.xxx.BLENT	EVOLVED Single Cylinder Smart Lock with interior Lever	10.7	$1,128	$1,223
85354.xxx.BOS	EVOLVED Single Cylinder Smart Lock - exterior trim only	5.3	$640	$677
85354.xxx.BISX	EVOLVED interior trim with mechanics minus lever	5.4	$426	$483
85354.xxx.BFD	EVOLVED Full Dummy with interior Knob	7.7	$752	$846
85354.xxx.BRFD	EVOLVED Full Dummy with interior Lever	7.7	$752	$846
85354.xxx.BLFD	EVOLVED Full Dummy with interior Lever	7.7	$752	$846
85354.xxx.OSFD	EVOLVED Full Dummy - exterior trim only	5.3	$458	$514
85354.xxx.ISFDX	EVOLVED Full Dummy - interior trim only minus lever	5.3	$233	$270

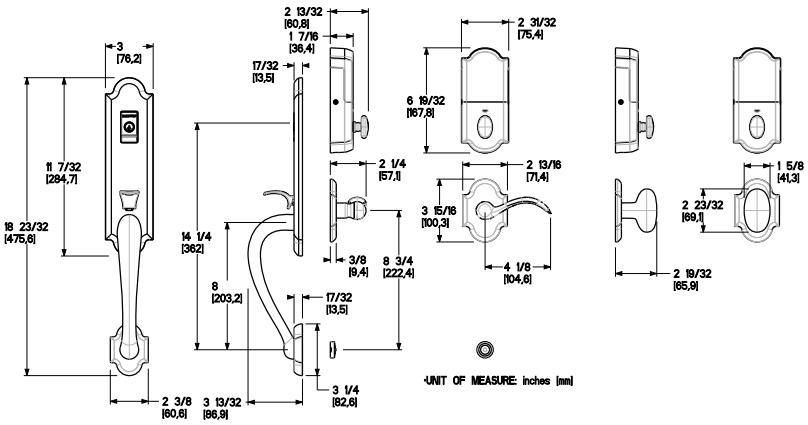

EVOLVED ENTRANCE SETS

Boulder Evolved Full Escutcheon Handleset

w/ 5024 Oval knob or 5452V Beavertail lever

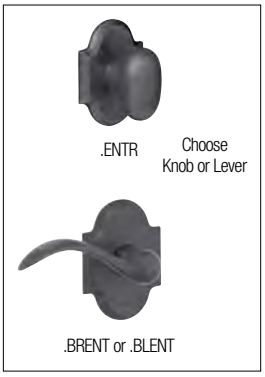

Item #	Description	Wt.	003, 031, 033 050, 060, 102 112, 150, 151 190, 260, 264	044, 055, 056 402, 452
6402.xxx.BENTR	EVOLVED Single Cylinder Smart Lock with interior Knob	12.8	$1,191	$1,284
6402.xxx.BRENT	EVOLVED Single Cylinder Smart Lock with interior Lever	12.8	$1,191	$1,284
6402.xxx.BLENT	EVOLVED Single Cylinder Smart Lock with interior Lever	12.8	$1,191	$1,284
6402.xxx.BOS	EVOLVED Single Cylinder Smart Lock - exterior trim only	6.4	$702	$740
6402.xxx.BISX	EVOLVED interior trim with mechanics minus lever	6.4	$426	$483
6402.xxx.BFD	EVOLVED Full Dummy with interior Knob	7.7	$814	$909
6402.xxx.BRFD	EVOLVED Full Dummy with interior Lever	7.7	$814	$909
6402.xxx.BLFD	EVOLVED Full Dummy with interior Lever	7.7	$814	$909
6402.xxx.OSFD	EVOLVED Full Dummy - exterior trim only	5.3	$521	$577
6402.xxx.ISFDX	EVOLVED Full Dummy - interior trim only minus lever	5.3	$233	$270

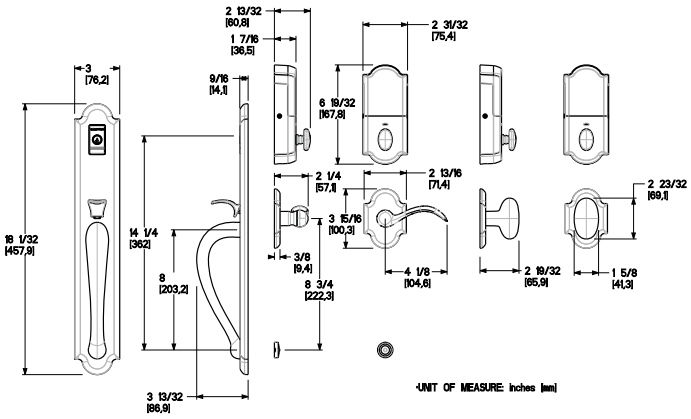

Canterbury Evolved Sectional Handleset

w/ 5455v lever or 5020 Knob

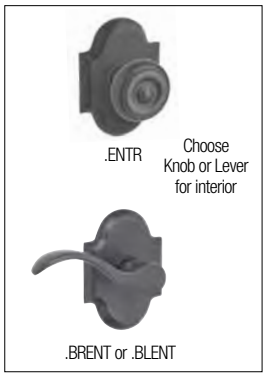

Item #	Description	Wt.	003, 031, 033 050, 060, 102 112, 150, 151 190, 260, 264	044, 055, 056 402, 452
85305.xxx.BENTR	EVOLVED Single Cylinder Smart Lock with interior Knob	10.7	$940	$1,034
85305.xxx.BRENT	EVOLVED Single Cylinder Smart Lock with interior Lever	10.7	$940	$1,034
85305.xxx.BLENT	EVOLVED Single Cylinder Smart Lock with interior Lever	10.7	$940	$1,034
85305.xxx.BOS	EVOLVED Single Cylinder Smart Lock - exterior trim only	6.8	$451	$489
85305.xxx.BISX	EVOLVED interior trim with mechanics minus lever	6.5	$426	$483
85305.xxx.BRFD	EVOLVED Full Dummy with interior Knob	6.5	$564	$658
85305.xxx.BLFD	EVOLVED Full Dummy with interior Lever	6.5	$564	$658
85305.xxx.OSFD	EVOLVED Full Dummy with interior Lever	6.5	$270	$326
85305.xxx.ISFDX	EVOLVED Full Dummy - exterior trim only	6.8	$233	$270

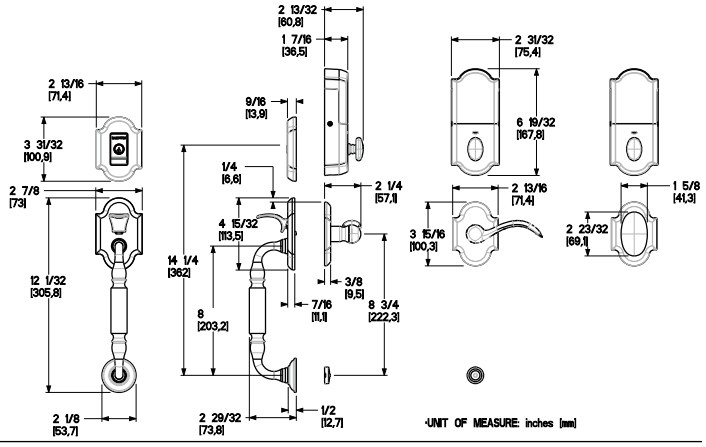

Cody Evolved ¾ Escutcheon Handleset

w/ 5024 Oval knob or 5452V Beavertail lever

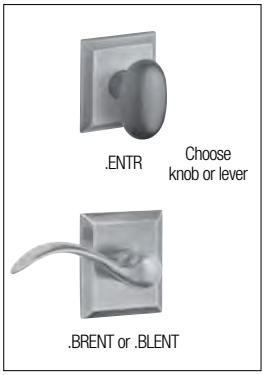

Item #	Description	Wt.	003, 031, 033 050, 060, 102 112, 150, 151 190, 260, 264	044, 055, 056 402, 452
85352.xxx.BENTR	EVOLVED Single Cylinder Smart Lock with interior Knob	10.7	$1,128	$1,223
85352.xxx.BRENT	EVOLVED Single Cylinder Smart Lock with interior Lever	10.7	$1,128	$1,223
85352.xxx.BLENT	EVOLVED Single Cylinder Smart Lock with interior Lever	10.7	$1,128	$1,223
85352.xxx.BOS	EVOLVED Single Cylinder Smart Lock - exterior trim only	5.3	$640	$677
85352.xxx.BISX	EVOLVED interior trim with mechanics minus lever	5.4	$426	$483
85352.xxx.BFD	EVOLVED Full Dummy with interior Knob	7.7	$752	$846
85352.xxx.BRFD	EVOLVED Full Dummy with interior Lever	7.7	$752	$846
85352.xxx.BLFD	EVOLVED Full Dummy with interior Lever	7.7	$752	$846
85352.xxx.OSFD	EVOLVED Full Dummy - exterior trim only	5.3	$458	$514
85352.xxx.ISFDX	EVOLVED Full Dummy - interior trim only minus lever	5.3	$233	$270

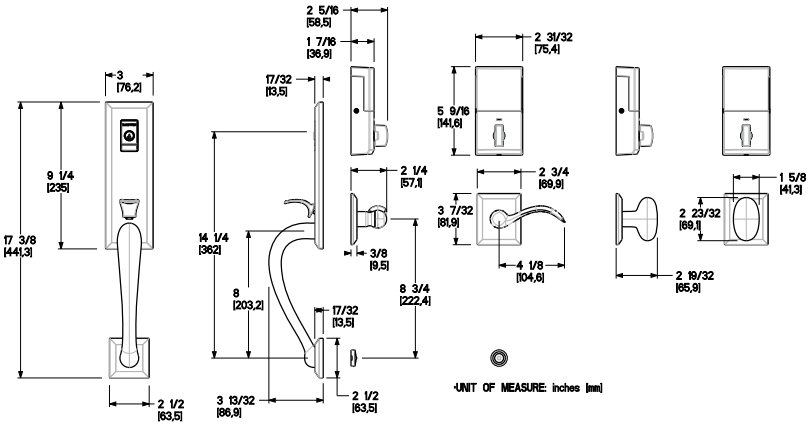

Cody Evolved Full Escutcheon Handleset

w/ 5024 Oval knob or 5452V Beavertail lever

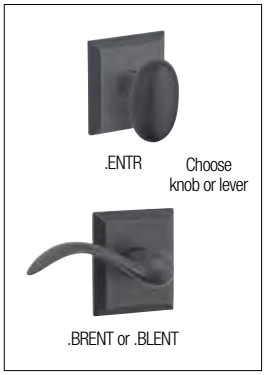

Item #	Description	Wt.	003, 031, 033 050, 060, 102 112, 150, 151 190, 260, 264	044, 055, 056 402, 452
6403.xxx.BENTR	EVOLVED Single Cylinder Smart Lock with interior Knob	12.8	$1,191	$1,284
6403.xxx.BRENT	EVOLVED Single Cylinder Smart Lock with interior Lever	12.8	$1,191	$1,284
6403.xxx.BLENT	EVOLVED Single Cylinder Smart Lock with interior Lever	12.8	$1,191	$1,284
6403.xxx.BOS	EVOLVED Single Cylinder Smart Lock - exterior trim only	6.4	$702	$740
6403.xxx.BISX	EVOLVED interior trim with mechanics minus lever	6.4	$426	$483
6403.xxx.BFD	EVOLVED Full Dummy with interior Knob	8.8	$814	$909
6403.xxx.BRFD	EVOLVED Full Dummy with interior Lever	8.8	$814	$909
6403.xxx.BLFD	EVOLVED Full Dummy with interior Lever	8.8	$814	$909
6403.xxx.OSFD	EVOLVED Full Dummy - exterior trim only	5.3	$521	$577
6403.xxx.ISFDX	EVOLVED Full Dummy - interior trim only minus lever	5.3	$233	$270

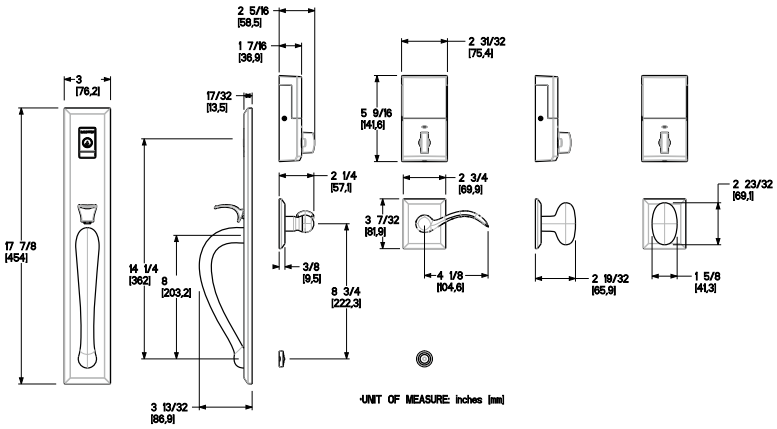

EVOLVED ENTRANCE SETS

Devonshire Evolved Handleset
w/ 5152 Classic lever

.BRENT or .BLENT

Item #	Description	Wt.	003, 031, 033 050, 060, 102 112, 150, 151 190, 260, 264	044, 055, 056 402, 452
6401.xxx.BRENT	EVOLVED Single Cylinder Smart Lock with interior Lever	11.8	$1,191	$1,284
6401.xxx.BLENT	EVOLVED Single Cylinder Smart Lock with interior Lever	11.8	$1,191	$1,284
6401.xxx.BOS	EVOLVED Single Cylinder Smart Lock - exterior trim only	6.4	$702	$740
6401.xxx.BISX	EVOLVED interior trim with mechanics minus lever	5.4	$426	$483
6401.xxx.BRFD	EVOLVED Full Dummy with interior Lever	8.8	$814	$909
6401.xxx.BLFD	EVOLVED Full Dummy with interior Knob	8.8	$814	$909
6401.xxx.OSFD	EVOLVED Full Dummy - exterior trim only	5.3	$521	$577
6401.xxx.ISFDX	EVOLVED Full Dummy - interior trim only minus lever	5.3	$233	$270

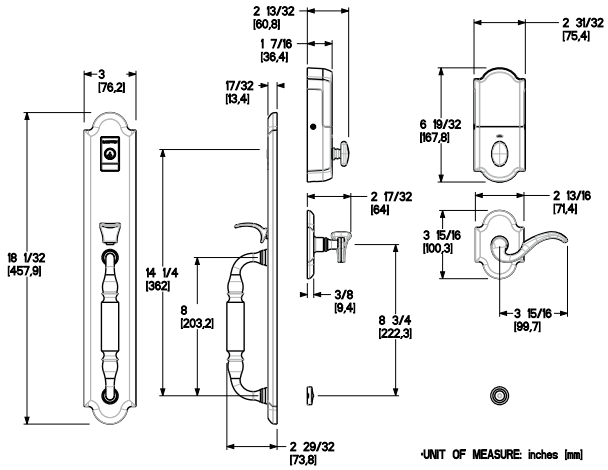

Hollywood Hills Evolved Full Escutcheon Handleset
w/ K008 Knob

Item #	Description	Wt.	003, 031, 033 050, 060, 102 112, 150, 151 190, 260, 264	044, 055, 056 402, 452
85311.xxx.BENTR	EVOLVED Single Cylinder Smart Lock with interior Knob	5.3	$1,315	$1,410
85311.xxx.BOS	EVOLVED Single Cylinder Smart Lock - exterior trim only	5.3	$764	$802
85311.xxx.BISX	EVOLVED interior trim with mechanics minus knob		$489	$546
85311.xxx.BFD	EVOLVED Full Dummy with interior Knob		$940	$1,034
85311.xxx.OSFD	EVOLVED Full Dummy - exterior trim only		$583	$640
85311.xxx.ISFDX	EVOLVED Full Dummy - interior trim only minus lever		$295	$333

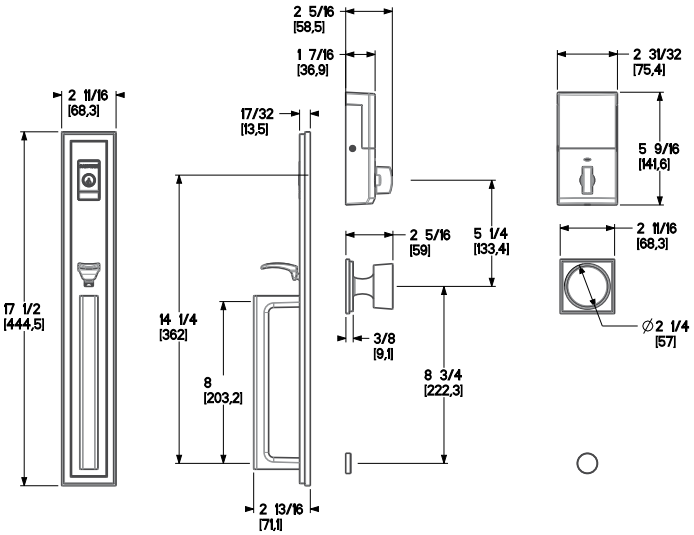

Kensington Evolved Handleset
w/ 5108 Lever

.BRENT or .BLENT

Item #	Description	Wt.	003, 031, 033 050, 060, 102 112, 150, 151 190, 260, 264	044, 055, 056 402, 452
6426.xxx.BRENT	EVOLVED Single Cylinder Smart Lock with interior Lever	11.5	$1,128	$1,223
6426.xxx.BLENT	EVOLVED Single Cylinder Smart Lock with interior Lever	11.5	$1,128	$1,223
6426.xxx.BOS	EVOLVED Single Cylinder Smart Lock - exterior trim only	6.9	$640	$677
6426.xxx.BISX	EVOLVED interior trim with mechanics minus lever	4.6	$426	$483
6426.xxx.BRFD	EVOLVED Full Dummy with interior Lever	8.5	$752	$846
6426.xxx.BLFD	EVOLVED Full Dummy with interior Lever	8.5	$752	$846
6426.xxx.OSFD	EVOLVED Full Dummy - exterior trim only	6.9	$458	$514
6426.xxx.ISFDX	EVOLVED Full Dummy - interior trim only minus lever	6.9	$233	$270

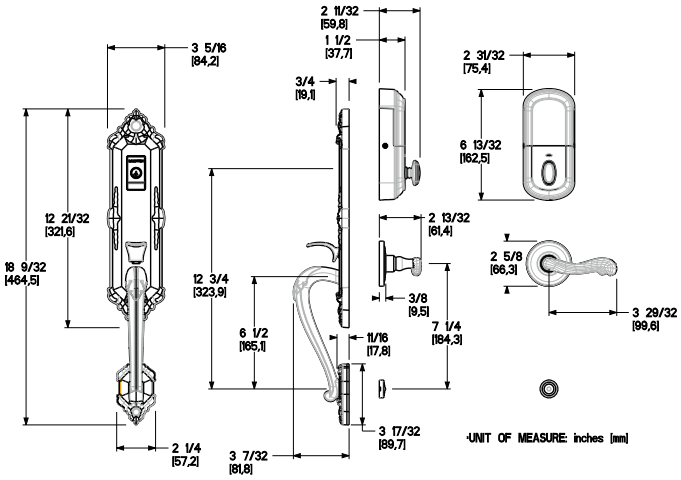

Manchester Evolved Handleset
w/ 5455V Wave lever

.BRENT or .BLENT

Item #	Description	Wt.	003, 031, 033 050, 060, 102 112, 150, 151 190, 260, 264	044, 055, 056 402, 452
85350.xxx.BRENT	EVOLVED Single Cylinder Smart Lock with interior Lever	10.7	$1,128	$1,223
85350.xxx.BLENT	EVOLVED Single Cylinder Smart Lock with interior Lever	10.7	$1,128	$1,223
85350.xxx.BOS	EVOLVED Single Cylinder Smart Lock - exterior trim only	5.3	$640	$677
85350.xxx.BISX	EVOLVED interior trim with mechanics minus lever	5.4	$426	$483
85350.xxx.BRFD	EVOLVED Full Dummy with interior Lever	7.7	$752	$846
85350.xxx.BLFD	EVOLVED Full Dummy with interior Lever	7.7	$752	$846
85350.xxx.OSFD	EVOLVED Full Dummy - exterior trim only	5.3	$458	$514
85350.xxx.ISFDX	EVOLVED Full Dummy - interior trim only minus lever	5.3	$233	$270

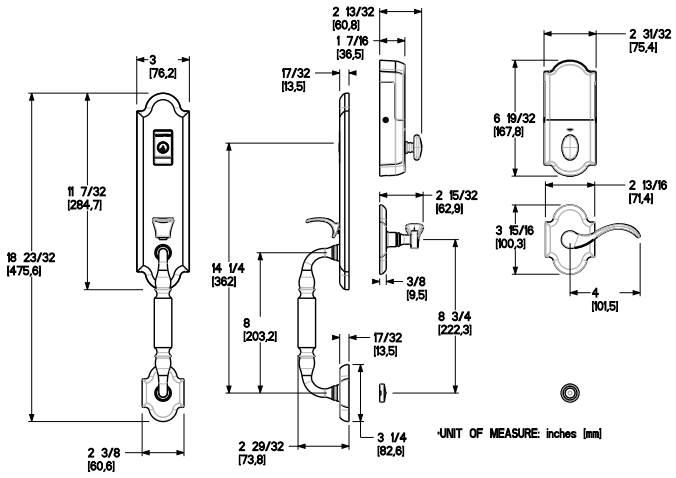

EVOLVED ENTRANCE SETS

Minneapolis Evolved Sectional Handleset
w/ 5162 lever

.BRENT or .BLENT

Item #	Description	Wt.	003, 031, 033 050, 060, 102 112, 150, 151 190, 260, 264	044, 055, 056 402, 452
85390.xxx.BRENT	EVOLVED Single Cylinder Smart Lock with interior Lever	10.7	$940	$1,034
85390.xxx.BLENT	EVOLVED Single Cylinder Smart Lock with interior Lever	10.7	$940	$1,034
85390.xxx.BOS	EVOLVED Single Cylinder Smart Lock - exterior trim only	6.8	$451	$489
85390.xxx.BISX	EVOLVED interior trim with mechanics minus lever	6.8	$426	$483
85390.xxx.BRFD	EVOLVED Full Dummy with interior Lever	6.5	$564	$658
85390.xxx.BLFD	EVOLVED Full Dummy with interior Lever	6.5	$564	$658
85390.xxx.OSFD	EVOLVED Full Dummy - exterior trim only	6.8	$270	$326
85390.xxx.ISFDX	EVOLVED Full Dummy - interior trim only minus lever	6.8	$233	$270

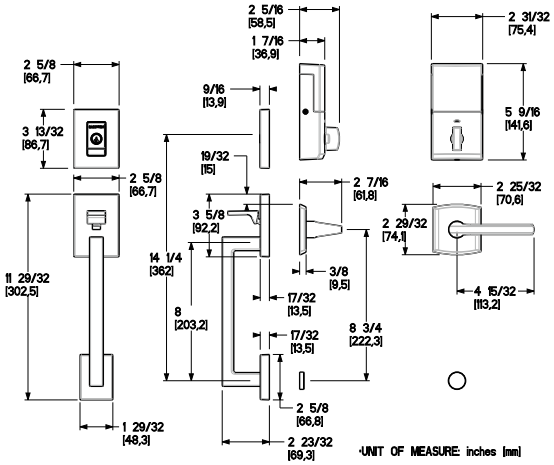

Minneapolis™ Evolved ¾ Escutcheon Handleset
w/ 5162 lever

QUICK SHIP

.BRENT or .BLENT

Item #	Description	Wt.	003, 031, 033 050, 060, 102 112, 150, 151 190, 260, 264	044, 055, 056 402, 452
85391.xxx.BRENT	EVOLVED Single Cylinder Smart Lock with interior Lever	9.9	$1,128	$1,223
85391.xxx.BLENT	EVOLVED Single Cylinder Smart Lock with interior Lever	9.9	$1,128	$1,223
85391.xxx.BOS	EVOLVED Single Cylinder Smart Lock - exterior trim only	5.1	$640	$677
85391.xxx.BISX	EVOLVED interior trim with mechanics minus lever	4.8	$426	$483
85391.xxx.BRFD	EVOLVED Full Dummy with interior Lever	7.9	$752	$846
85391.xxx.BLFD	EVOLVED Full Dummy with interior Lever	7.9	$752	$846
85391.xxx.OSFD	EVOLVED Full Dummy - exterior trim only	5.1	$458	$514
85391.xxx.ISFDX	EVOLVED Full Dummy - interior trim only minus lever	5.1	$233	$270

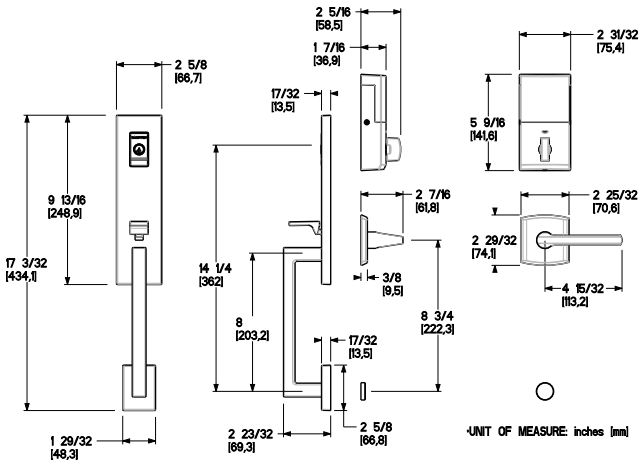

Minneapolis™ Evolved Full Escutcheon Handleset
w/ 5162 lever

QUICK SHIP

Item #	Description	Wt.	003, 031, 033 050, 060, 102 112, 150, 151 190, 260, 264	044, 055, 056 402, 452
85392.xxx.BRENT	EVOLVED Single Cylinder Smart Lock with interior Lever	13.3	$1,191	$1,284
85392.xxx.BLENT	EVOLVED Single Cylinder Smart Lock with interior Lever	13.3	$1,191	$1,284
85392.xxx.BOS	EVOLVED Single Cylinder Smart Lock - exterior trim only	8.1	$702	$740
85392.xxx.BISX	EVOLVED interior trim with mechanics minus lever	5.2	$426	$483
85392.xxx.BRFD	EVOLVED Full Dummy with interior Lever	10.3	$814	$909
85392.xxx.BLFD	EVOLVED Full Dummy with interior Lever	10.3	$814	$909
85392.xxx.OSFD	EVOLVED Full Dummy - exterior trim only	8.1	$521	$577
85392.xxx.ISFDX	EVOLVED Full Dummy - interior trim only minus lever	8.1	$233	$270

.BRENT or .BLENT

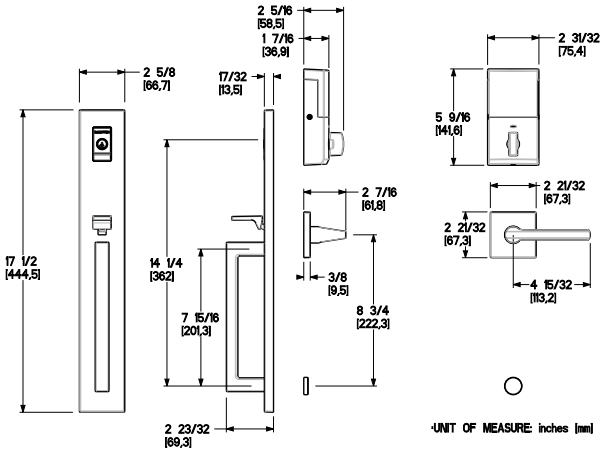

Palm Springs™ Evolved ¾ Escutcheon Handleset
w/ L024 lever

Item #	Description	Wt.	003, 031, 033 050, 060, 102 112, 150, 151 190, 260, 264	044, 055, 056 402, 452
85396.xxx.BRENT	EVOLVED Single Cylinder Smart Lock with interior Lever	9.9	$1,128	$1,223
85396.xxx.BLENT	EVOLVED Single Cylinder Smart Lock with interior Lever	9.9	$1,128	$1,223
85396.xxx.BOS	EVOLVED Single Cylinder Smart Lock - exterior trim only	5.1	$640	$677
85396.xxx.BISX	EVOLVED interior trim with mechanics minus lever	4.8	$426	$483
85396.xxx.BRFD	EVOLVED Full Dummy with interior Lever	6.9	$752	$846
85396.xxx.BLFD	EVOLVED Full Dummy with interior Lever	6.9	$752	$846
85396.xxx.OSFD	EVOLVED Full Dummy - exterior trim only	5.1	$458	$514
85396.xxx.ISFDX	EVOLVED Full Dummy - interior trim only minus lever	5.1	$233	$270

.BRENT or .BLENT

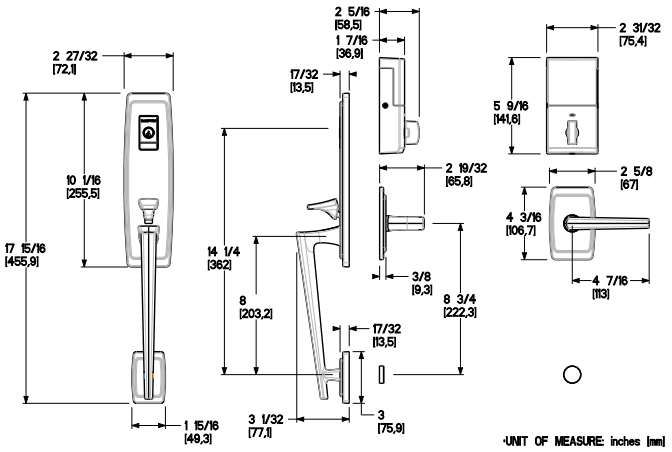

*QUICK SHIP is available in limited functions and finishes.
For complete listing, please refer to page 272.

EVOLVED ENTRANCE SETS

Palm Springs™ Evolved Full Escutcheon Handleset
w/ L024 lever

.BRENT or .BLENT

Item #	Description	Wt.	003, 031, 033 050, 060, 102 112, 150, 151 190, 260, 264	044, 055, 056 402, 452
85397.xxx.BRENT	EVOLVED Single Cylinder Smart Lock with interior Lever	13.3	$1,191	$1,284
85397.xxx.BLENT	EVOLVED Single Cylinder Smart Lock with interior Lever	13.3	$1,191	$1,284
85397.xxx.BOS	EVOLVED Single Cylinder Smart Lock - exterior trim only	8.1	$702	$740
85397.xxx.BISX	EVOLVED interior trim with mechanics minus lever	5.2	$426	$483
85397.xxx.BRFD	EVOLVED Full Dummy with interior Lever	10.3	$814	$909
85397.xxx.BLFD	EVOLVED Full Dummy with interior Lever	10.3	$814	$909
85397.xxx.OSFD	EVOLVED Full Dummy - exterior trim only	8.1	$521	$577
85397.xxx.ISFDX	EVOLVED Full Dummy - interior trim only minus lever	8.1	$233	$270

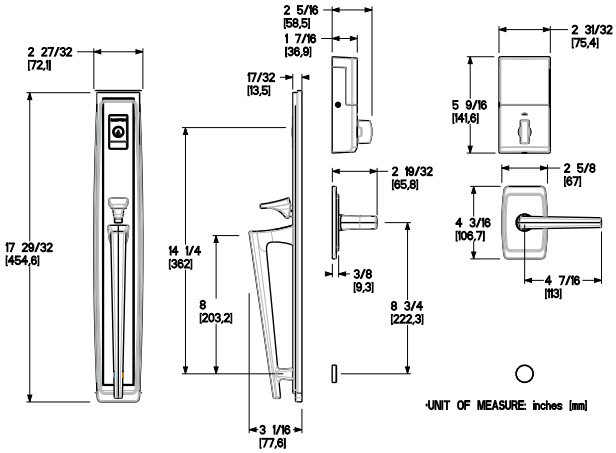

Soho® Evolved ¾ Escutcheon Handleset
w/ 5485V lever

.BRENT or .BLENT

Item #	Description	Wt.	003, 031, 033 050, 060, 102 112, 150, 151 190, 260, 264	044, 055, 056 402, 452
85387.xxx.BRENT	EVOLVED Single Cylinder Smart Lock with interior Lever	10.7	$1,128	$1,223
85387.xxx.BLENT	EVOLVED Single Cylinder Smart Lock with interior Lever	10.7	$1,128	$1,223
85387.xxx.BOS	EVOLVED Single Cylinder Smart Lock - exterior trim only	5.3	$640	$677
85387.xxx.BISX	EVOLVED interior trim with mechanics minus lever	5.4	$426	$483
85387.xxx.BRFD	EVOLVED Full Dummy with interior Lever	7.7	$752	$846
85387.xxx.BLFD	EVOLVED Full Dummy with interior Lever	7.7	$752	$846
85387.xxx.OSFD	EVOLVED Full Dummy - exterior trim only	5.3	$458	$514
85387.xxx.ISFDX	EVOLVED Full Dummy - interior trim only minus lever	5.3	$233	$270

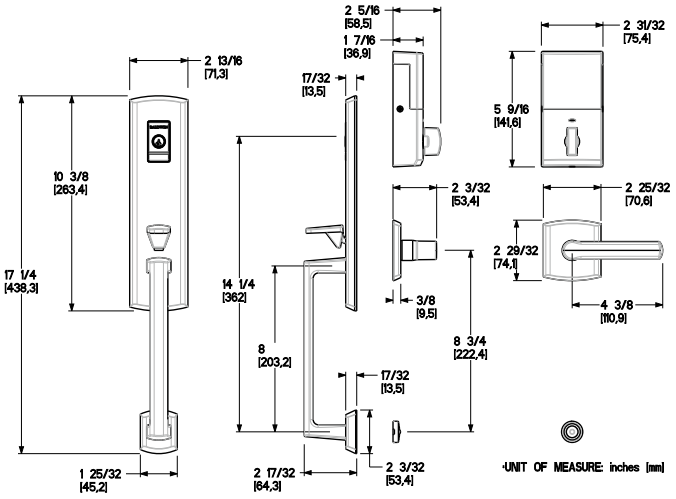

Stonegate Evolved Handleset
w/ 5445V Classic lever

.BRENT or .BLENT

Item #	Description	Wt.	003, 031, 033 050, 060, 102 112, 150, 151 190, 260, 264	044, 055, 056 402, 452
85355.xxx.BRENT	EVOLVED Single Cylinder Smart Lock with interior Lever	10.7	$1,128	$1,223
85355.xxx.BLENT	EVOLVED Single Cylinder Smart Lock with interior Lever	10.7	$1,128	$1,223
85355.xxx.BOS	EVOLVED Single Cylinder Smart Lock - exterior trim only	5.3	$640	$677
85355.xxx.BISX	EVOLVED interior trim with mechanics minus lever	5.4	$426	$483
85355.xxx.BRFD	EVOLVED Full Dummy with interior Lever	7.7	$752	$846
85355.xxx.BLFD	EVOLVED Full Dummy with interior Lever	7.7	$752	$846
85355.xxx.OSFD	EVOLVED Full Dummy - exterior trim only	5.3	$458	$514
85355.xxx.ISFDX	EVOLVED Full Dummy - interior trim only minus lever	5.3	$233	$270

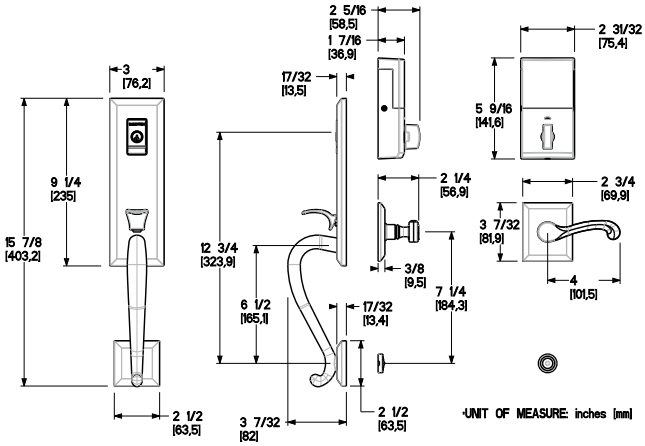

EVOLVED ENTRANCE SETS

Evolved Contemporary Deadbolt

QUICK SHIP

Item #	Description	Wt.	003, 031, 033 050, 060, 102 112, 150, 151 190, 260, 264	044, 055, 056 402, 452
8220.xxx.B	EVOLVED Single Cylinder Smart Deadbolt	5.1	$583	$621
8220.xxx.BOS	EVOLVED Single Cylinder Smart Deadbolt -exterior only	1.9	$275	$295
8220.xxx.BIS	EVOLVED Single Cylinder Smart Deadbolt -Interior only	3.2	$307	$326

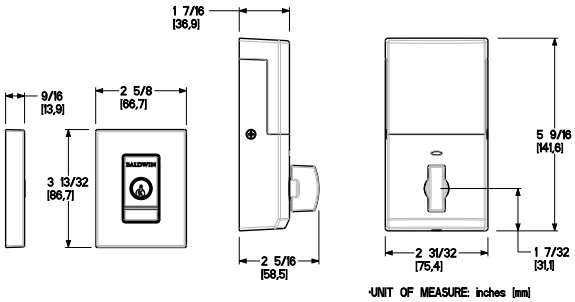

Evolved Traditional Deadbolt

QUICK SHIP

Available while supplies last.

Item #	Description	Wt.	003, 031, 033 050, 060, 102 112, 150, 151 190, 260, 264	044, 055, 056 402, 452
8231.xxx.B	EVOLVED Single Cylinder Smart Deadbolt	5.0	$583	$621
8231.xxx.BOS	EVOLVED Single Cylinder Smart Deadbolt -exterior only	1.8	$275	$295
8231.xxx.BIS	EVOLVED Single Cylinder Smart Deadbolt -Interior only	3.2	$307	$326

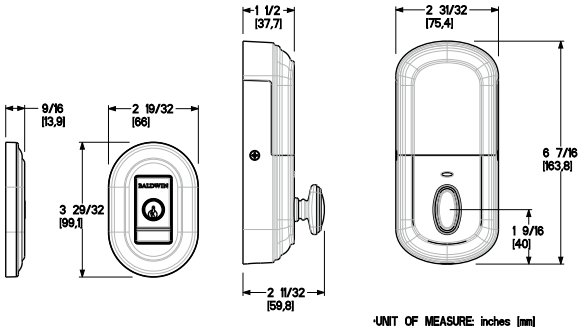

Evolved Arched Deadbolt

QUICK SHIP

Item #	Description	Wt.	003, 031, 033 050, 060, 102 112, 150, 151 190, 260, 264	044, 055, 056 402, 452
8252.xxx.B	EVOLVED Single Cylinder Smart Deadbolt	5.0	$583	$621
8252.xxx.BOS	EVOLVED Single Cylinder Smart Deadbolt -exterior only	1.8	$275	$295
8252.xxx.BIS	EVOLVED Single Cylinder Smart Deadbolt -Interior only	3.2	$307	$326

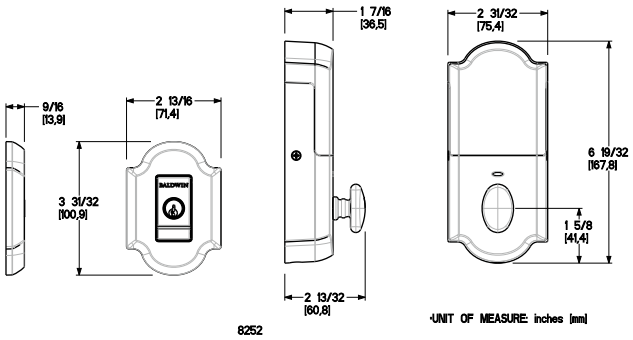

***QUICK SHIP** is available in **limited functions and finishes.**
For complete listing, please refer to page 277.

Boulder Sectional Handleset Kit

QUICK SHIP

Item #	Description	Wt.	003, 031, 033 050, 060, 102 112, 150, 151 190, 260, 264	044, 055, 056 402, 452
85353.xxx.ACRH	Sectional Entry Handleset Kit	4.2	$382	$398
85353.xxx.ACLH	Sectional Entry Handleset Kit	1.8	$382	$398
85353.xxx.ACX	Sectional Entry Handleset Kit - minus lever	3.2	$325	$342

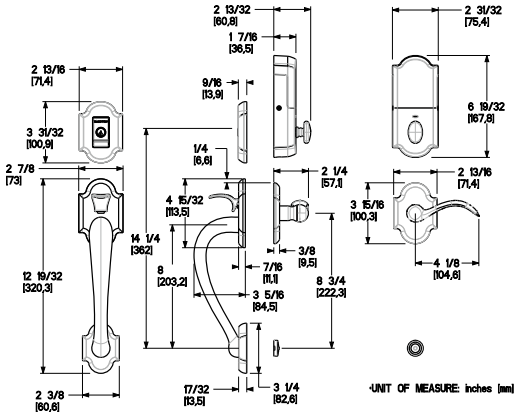

Minneapolis Sectional Handleset Kit

QUICK SHIP

Item #	Description	Wt.	003, 031, 033 050, 060, 102 112, 150, 151 190, 260, 264	044, 055, 056 402, 452
85390.xxx.ACRH	Sectional Entry Handleset Kit	6.5	$382	$398
85390.xxx.ACLH	Sectional Entry Handleset Kit	6.5	$382	$398
85390.xxx.ACX	Sectional Entry Handleset Kit - minus lever	5.0	$325	$342

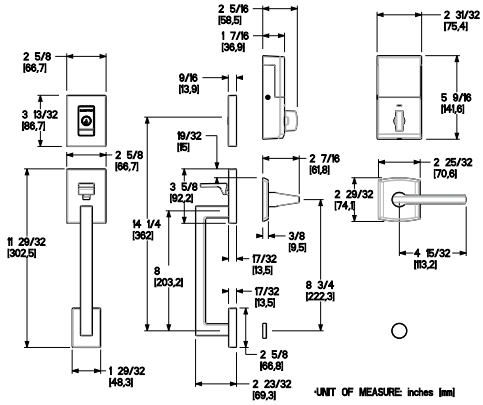

Evolved Fob

QUICK SHIP

Item #	Description	Wt.	003 055, 056
8380.xxx	Electronic Key Fob	0.2	$120

***QUICK SHIP** is available in **limited functions and finishes.**
For complete listing, please refer to page 277.

TOUCHSCREEN DEADBOLTS & HANDLESETS

BALDWIN®

TOUCHSCREEN

Luxurious Simplicity. Bold Design.

BEAUTIFULLY BALDWIN, THIS NEW OFFERING COMBINES A TOUCHSCREEN AND SECURESCREEN TECHNOLOGY WITH BOLD BALDWIN DESIGN TO CREATE A SIMPLE ELECTRONIC CONNECTED SOLUTION.

- The Advanced Touchscreen is responsive to your hand for screen display and code entry.
- Secure Screen Technology™: Provides additional security by employing random digits prior to entering your personal code to prevent finger print and code detection.
- One Touch Locking: Lock your door with a single touch. No need for a key or code to lock the door.
- Wirelessly communicate with Security and Smart Home systems via Z-Wave Technology.
- Up to 16 customizable user codes (30 for Z-Wave version) with 4 to 8 digit code length for family, guests and service professionals.
- Baldwin Touchscreen is easy to install, program to use and operates on 4 AA batteries (supplied).
- Indicator light on the interior trim will blink green, amber or red to indicate unlocked, locked or low battery status.
- Activate the 30 second auto-locking feature for convenience and peace-of-mind.
- The Touchscreen deadbolts elegantly pair with coordinated traditional, contemporary and rustic handle grip and levers styles for your entry door.
- 128-bit Advanced Encryption Standard (AES) communication with Z-Wave 500 chipset.
- Deadbolt exceeds ANSI/BHMA Grade 2 security test standards.

SPECIFICATION

SOLID BRASS: Deadbolt trim manufactured of solid brass for maximum strength and durability.

DOOR THICKNESS: 1-3/4″ standard with service part conversion kit available for 2″ and 2-1/4″ thick doors.

BOLT: Deadbolt has 1″ solid brass tapered bolt and a hardened steel insert for maximum security.

BACKSET: Adjustable backset 2-3/8″ or 2-3/4″.

FACE PLATE: 1″ square corner face plate. Round corner face plate available as a service part.

STRIKE: Full-lip reinforcing steel strike with two (2) 3“ security jamb screws, dust box and armored front to conceal the fasteners. Round corner strike available as a service part.

DOOR PREP: 2-1/8″ cross bore and 1” edge bore for latch.

CYLINDER: Cylinder supplied with 5-pin keying.

ANSI/BHMA: Exceeds Grade 2 requirements in ANSI/BHMA A156.36 test standard.

UL RATED: 20-minute fire rated certified UL deadbolt.

SECURITY: 128-bit Advanced Encryption Standard (AES) communication with Z-Wave 500 chipset.

POWER: Deadbolt requires four AA batteries (supplied).

SMART HOME DEVICES: Wirelessly communicate with Security and Smart Home systems via Z-Wave Technology.

WARRANTY: TOUCHSCREEN products comes with a lifetime mechanical and standard ESTATE finish warranty along with a 1 year electronic warranty to the original residential user of the product against defects in material and workmanship as long as the original user occupies the residential premises upon which the product was originally installed. This warranty does not cover scratches, abrasions, deterioration due to the use of paints, solvents or other chemicals, abuse, misuse, or product used in commercial applications.

Boulder Touchscreen Deadbolt

QUICK SHIP

Quick Ship Finishes:
003, 112, 150

Item #	Description	Wt.	003, 031, 033 050, 060, 102 112, 150, 151 190, 260, 264	044, 055, 056 402, 452
8235.xxx	Touchscreen Boulder Deadbolt Standalone	4.6	$440	$472
8235.xxx.ZW	Touchscreen Boulder Deadbolt with Z-Wave Technology	4.6	$530	$564

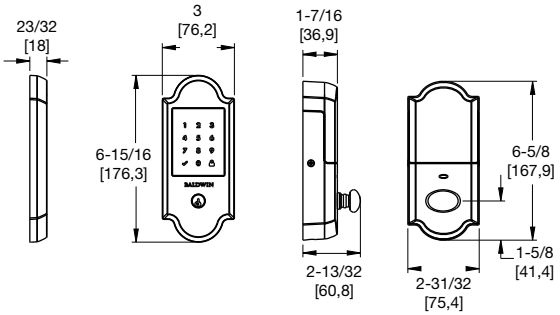

Boulder Handle Grip
w/ Beavertail Lever

Item #	Description	Wt.	003, 031, 033 050, 060, 102 112, 150, 151 190, 260, 264	044, 055, 056 402, 452
85353.xxx.ACRH	Boulder Handle Grip (RH)	6.8	$382	$398
85353.xxx.ACLH	Boulder Handle Grip (LH)	6.8	$382	$398

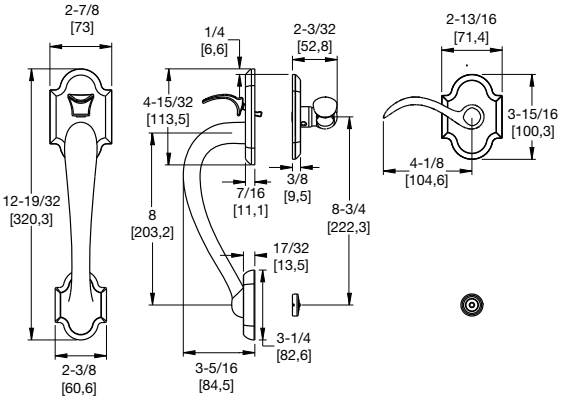

Canterbury Handle Grip
w/ Wave Lever

Item #	Description	Wt.	003, 031, 033 050, 060, 102 112, 150, 151 190, 260, 264	044, 055, 056 402, 452
85305.xxx.ACRH	Canterbury Handle Grip (RH)	5.8	$382	$398
85305.xxx.ACLH	Canterbury Handle Grip (LH)	5.8	$382	$398

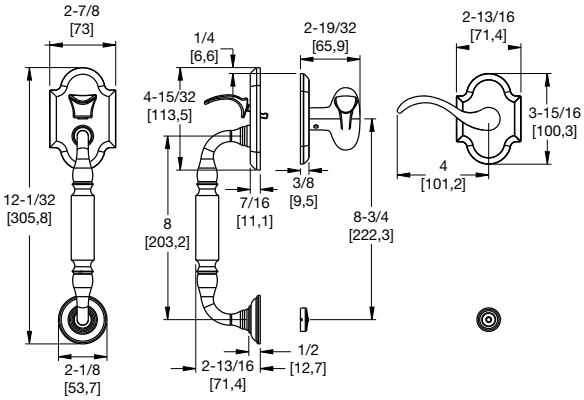

Minneapolis Touchscreen Deadbolt

QUICK SHIP

Quick Ship Finishes:
150, 260, 190

Item #	Description	Wt.	003, 031, 033 050, 060, 102 112, 150, 151 190, 260, 264	044, 055, 056 402, 452
8225.xxx	Touchscreen Minneapolis Deadbolt Standalone	4.4	$440	$472
8225.xxx.ZW	Touchscreen Minneapolis Deadbolt with Z-Wave Technology	4.4	$530	$564

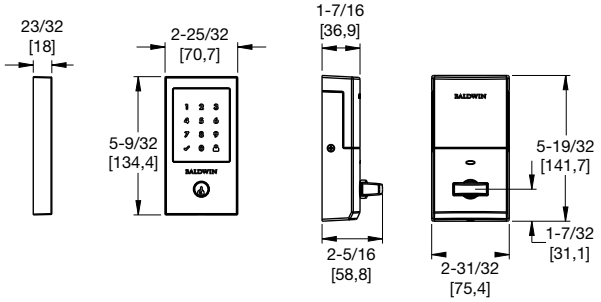

Minneapolis Handle Grip
w/ Lakeshore Lever

Item #	Description	Wt.	003, 031, 033 050, 060, 102 112, 150, 151 190, 260, 264	044, 055, 056 402, 452
85390.xxx.ACRH	Minneapolis Handle Grip (RH)	7.8	$382	$398
85390.xxx.ACLH	Minneapolis Handle Grip (LH)	7.8	$382	$398

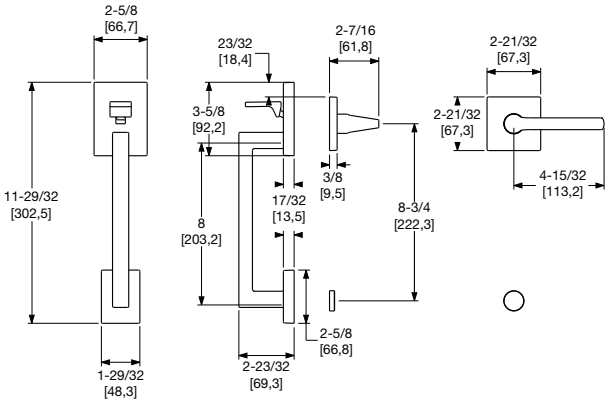

***QUICK SHIP** is available in **limited functions and finishes.**
For complete listing, please refer to page 277.

Boulder Touchscreen Handleset
w/ Beavertail Lever

QUICK SHIP

Item #	Description	Wt.	112, 150
85358.xxx.RENT	Boulder Touchscreen Handleset with Beavertail Lever (RH)	10.0	$764
85358.xxx.LENT	Boulder Touchscreen Handleset with Beavertail Lever (LH)	10.0	$764
85358.xxx.ZWRENT	Boulder Touchscreen Handleset with Z-Wave Technology & Beavertail Lever (RH)	10.0	$854
85358.xxx.ZWLENT	Boulder Touchscreen Handleset with Z-Wave Technology & Beavertail Lever (LH)	10.0	$854

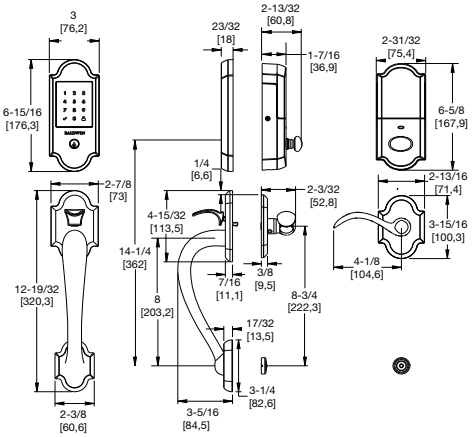

Canterbury Touchscreen Handleset
w/ Wave Lever

QUICK SHIP

Item #	Description	Wt.	003, 112, 150
85306.xxx.RENT	Canterbury Touchscreen Handleset with Wave Lever (RH)	10.0	$764
85306.xxx.LENT	Canterbury Touchscreen Handleset with Wave Lever (LH)	10.0	$764
85306.xxx.ZWRENT	Canterbury Touchscreen Handleset with Z-Wave Technology & Wave Lever (RH)	10.0	$854
85306.xxx.ZWLENT	Canterbury Touchscreen Handleset with Z-Wave Technology & Wave Lever (LH)	10.0	$854

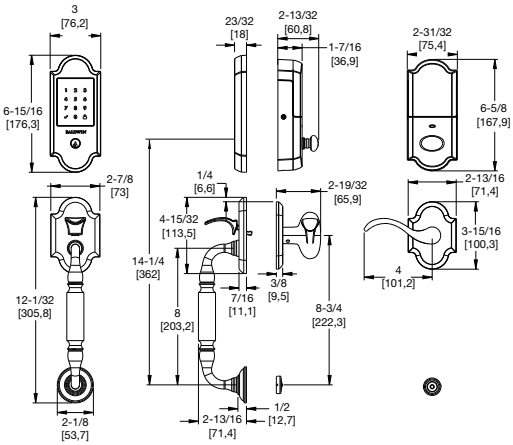

Minneapolis Touchscreen Handleset
w/ Lakeshore Lever

QUICK SHIP

Item #	Description	Wt.	150, 260, 190
85393.xxx.RENT	Minneapolis Touchscreen Handleset with Lakeshore Lever (RH)	10.8	$764
85393.xxx.LENT	Minneapolis Touchscreen Handleset with Lakeshore Lever (LH)	10.8	$764
85393.xxx.ZWRENT	Minneapolis Touchscreen Handleset with Z-Wave Technology & Lakeshore Lever (RH)	10.8	$854
85393.xxx.ZWLENT	Minneapolis Touchscreen Handleset with Z-Wave Technology & Lakeshore Lever (LH)	10.8	$854

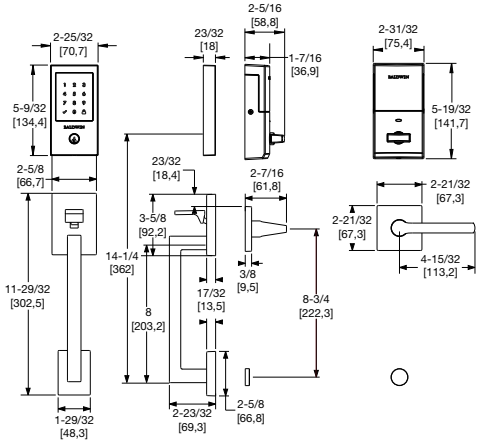

Boulder Full Dummy
w/ Beavertail Lever

Item #	Description	Wt.	003, 031, 033 050, 060, 102 112, 150, 151 190, 260, 264	044, 055, 056 402, 452
85358.xxx.RFD	Boulder Dummy Handleset with Beavertail Lever (RH)	8.1	$512	$598
85358.xxx.LFD	Boulder Dummy Handleset with Beavertail Lever (LH)	8.1	$512	$598

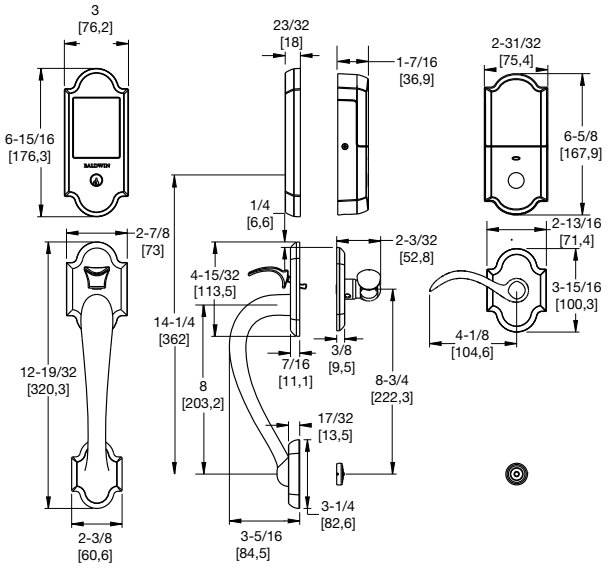

Canterbury Full Dummy
w/ Wave Lever

Item #	Description	Wt.	003, 031, 033 050, 060, 102 112, 150, 151 190, 260, 264	044, 055, 056 402, 452
85306.xxx.RFD	Canterbury Dummy Handleset with Wave Lever (RH)	8.9	$512	$598
85306.xxx.LFD	Canterbury Dummy Handleset with Wave Lever (LH)	8.9	$512	$598

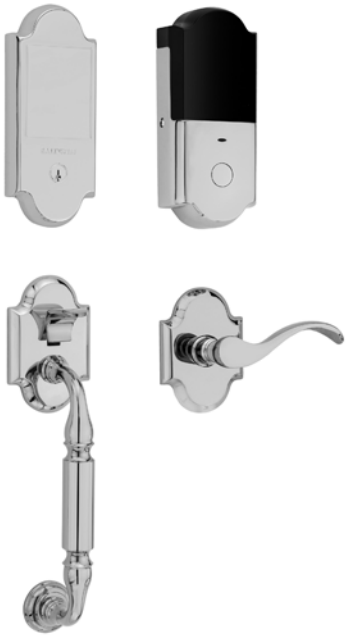

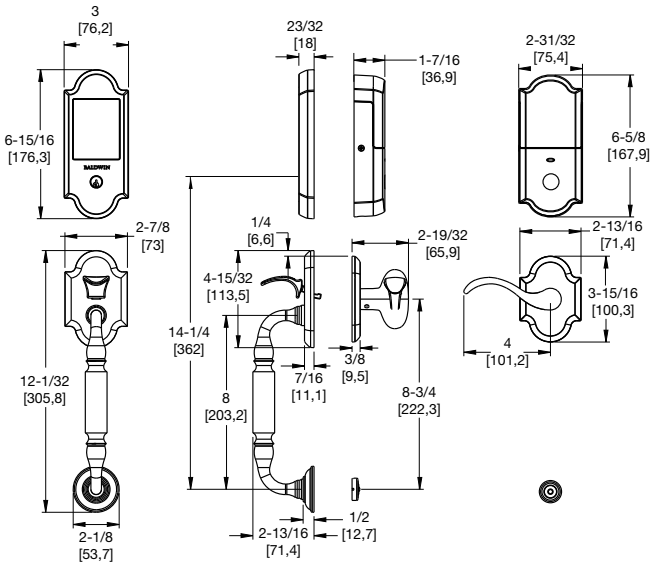

Minneapolis Full Dummy
w/ Lakeshore Lever

Item #	Description	Wt.	003, 031, 033 050, 060, 102 112, 150, 151 190, 260, 264	044, 055, 056 402, 452
85393.xxx.RFD	Minneapolis Dummy Handleset with Lakeshore Lever (RH)	8.9	$512	$598
85393.xxx.LFD	Minneapolis Dummy Handleset with Lakeshore Lever (LH)	8.9	$512	$598

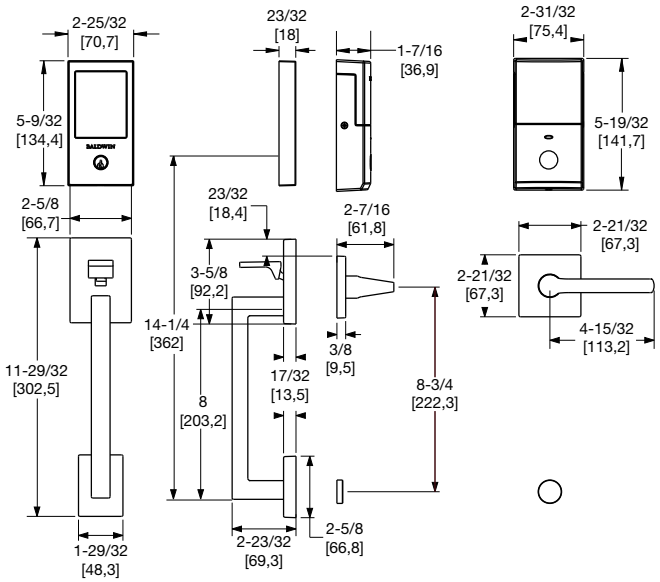

***QUICK SHIP** is available in **limited functions and finishes.**
For complete listing, please refer to page 277.

MORTISE LOCKS

Entrance Trim
Symbology

HOW TO ORDER
Refer to back cover for ordering guide

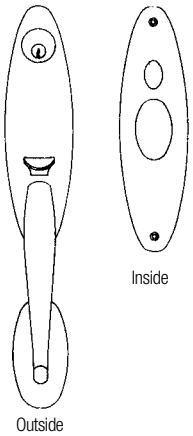

ENTRANCE
(ENTR)

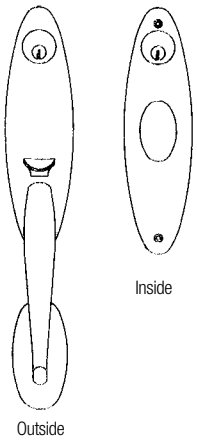

ENTRANCE*
DOUBLE CYLINDER
(DBLC)

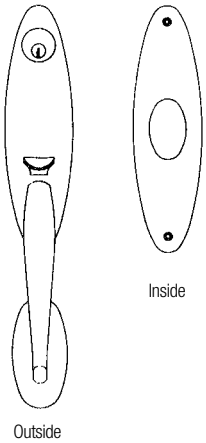

FULL DUMMY
(FD)

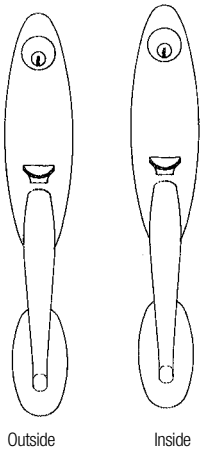

BACK TO BACK
(BB75)

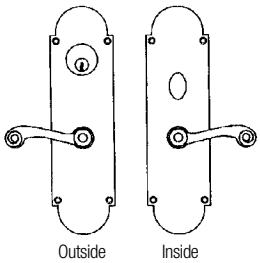

ENTRANCE
(ENTR)

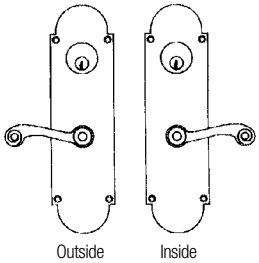

ENTRANCE*
DOUBLE CYLINDER
(DBLC)

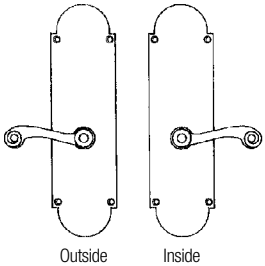

FULL DUMMY
(FD)

*WARNING: Double cylinder functions on any application used for Egress may present a safety hazard in times of emergency. Installation should be in accordance with local codes.

Watch for this icon as your quick guide to coordinating Baldwin lock hardware throughout your home. Your favorite Baldwin styles can be available in Tubular, Mortise, or Multi-Point.

This symbol signifies that the illustrated lock trim will cover most single tubular cut-outs when used with appropriate backset mortise lock. Individual conditions should be examined to confirm acceptability.

Escutcheon Plate Configurations
Ordered in half pairs except for privacy (.KP) cut-outs which are ordered in pairs.

.KN

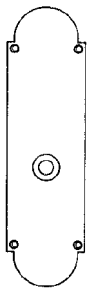

ENTRANCE
(KNOB HOLE)

.KC

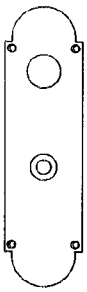

ENTRANCE
(KNOB AND
CYLINDER HOLE)

.KT

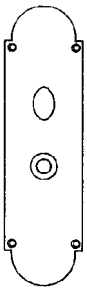

PRIVACY
(KNOB AND TURN
PIECE ATTACHED)

.KE

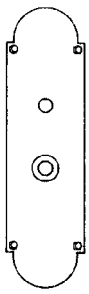

EMERGENCY RELEASE
(KNOB AND ER HOLE)

.KP

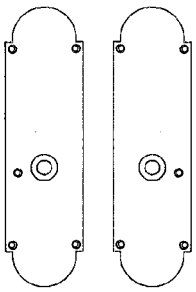

PRIVACY PIN*
(KNOB AND PRIVACY PIN HOLE)

*NOT AVAILABLE ON ALL ESCUTCHEONS

TERMINOLOGY

Terminology

All the codes used in Entrance Trim

ESCUTCHEON TRIMS

Function Code	Description
.ENTR	Active Entrance Trim – Knobs, Levers
.RENT	Right-handed Active Handleset – Levers
.LENT	Left-handed Active Handleset – Levers
.DBLC	Double Cylinder Active Entrance Trim
.FD	Full Dummy Trim
.RFD	Right-Handed Full Dummy
.LFD	Left-Handed Full Dummy
.BB75	Back to Back Entrance Trims 1 ¾" Doors
.BB30	Back to Back Entrance Trims up to 3" Doors
.BBFD	Back to Back Full Dummy
.KC	Knob and Cylinder Hole
.KT	Knob and Turn Piece Attached
.KN	Knob Hole
.KP	Knob and Privacy Button Hole (only sold in Pairs)
.KE	Knob and Emergency Release Hole
.KCIS	Cut for Cylinder Inside*
.KEIS	Cut for Emergency Release Inside*
.KNIS	Cut for Knob Inside*
.KTIS	Cut for Turn Piece Inside*
.KCOS	Cut for Cylinder Outside **
.KEOS	Cut for Emergency Release Outside**
.KNOS	Cut for Knob Outside**
.KTOS	Cut for Turn Piece Outside**

*Surface Mounted Thru-Bolt
** Thru-Bolted (No Surface Screws)

MORTISE LOCKS

Function Code	Description
.R	Right-handed Mortise Lock (Knobs)
.L	Left -handed Mortise Lock (Knobs)
.RLS	Right-handed Mortise Lock Lever Strength (Levers)
.LLS	Left-handed Mortise Lock Lever Strength (Levers)
.RR	Right-handed Reverse Bevel Mortise Lock (Knobs)
.LR	Left-handed Reverse Bevel Mortise Lock (Knobs)
.RRLS	Right-handed Reverse Bevel Mortise Lock Lever Strength (Levers)
.LRLS	Left-handed Reverse Bevel Mortise Lock Lever Strength (Levers)
.LRB1	Right-handed Reverse Bevel Mortise Lock Lever Strength (Levers) w/ 1˝ Front
.RRB1	Left-handed Reverse Bevel Mortise Lock Lever Strength (Levers) w/ 1˝ Front

Pre-Drilled Doors

This symbol signifies that the illustrated lock trim will cover most single tubular cut-outs when used with appropriate backset mortise lock. Individual conditions should be examined to confirm acceptability.

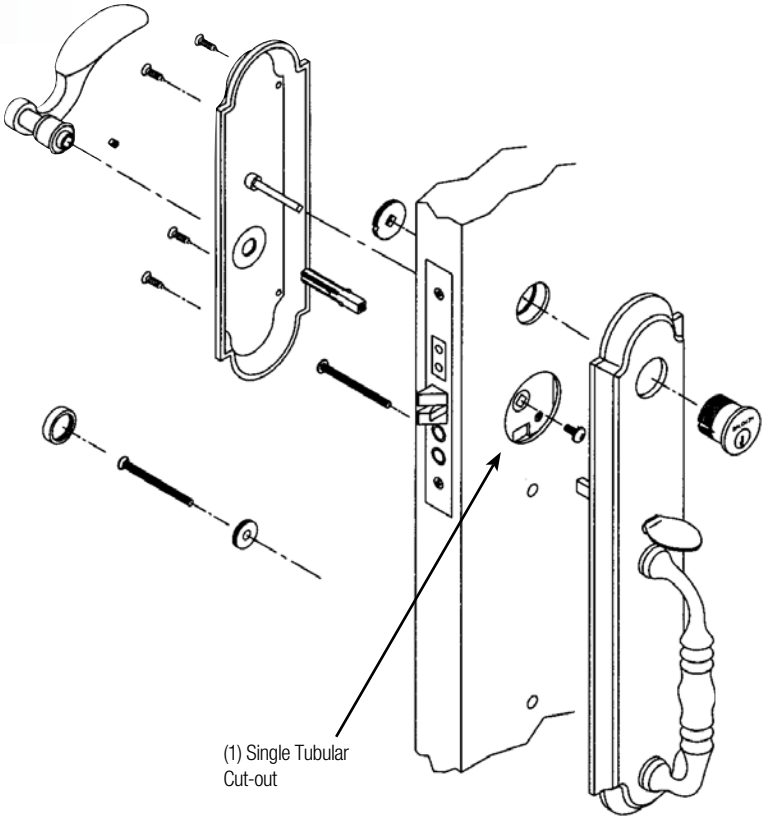

ATLANTA

Available while supplies last.

	Item #	Description		Wt.	003, 031, 033 050, 060, 102 112, 150, 151 190, 260, 264	044 055, 056 402, 452
SET	6570.xxx.ENTR	Entrance Trim	Set	9.5	$753	$842
SET	6570.xxx.DBLC	Double Cylinder	Set		$753	$842
SET	6570.xxx.FD	Full Dummy	Set		$753	$842
SET	6570.xxx.ENFD†	1 Active Entrance Set + 1 Full Dummy Set	2 Sets		$1,508†	
SET	6619.xxx.BB75	Entrance Back-to-Back – 1.75″ door	Set		$1,221	$1,309
SET	6619.xxx.BB30	Entrance Back-to-Back – up to 3″ door	Set		$1,221	$1,309
EXT	6619.xxx	Active Exterior Trim	Each		$427	$468
EXT	6619.xxx.DM	Dummy Exterior Trim	Each		$427	$468
INTERIOR	6513.xxx.KC	Interior Escutcheon – Cut for Cylinder (KC), Double Cylinder	Each		$228	$269
INTERIOR	6513.xxx.KE**	Cut for Emergency Release (KE)	Each		$228	$269
INTERIOR	6513.xxx.KN	Cut for Knob (KN), Passage/Dummy	Each		$228	$269
INTERIOR	6513.xxx.KT	Interior Escutcheon w/ Turn Knob (KT)	Each		$269	$315
INTERIOR	6513.xxx.KP	Escutcheons Cut for Privacy (KP)	Pair		$456	$538

†.ENFD only available in 050 & 112, to ensure a finish match on all components.

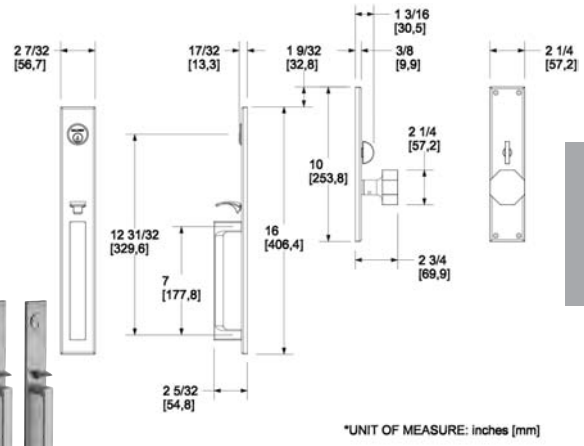

Trim width: 2.25″
Trim thickness: .375″ – G

Sets	6570.xxx.ENTR	6570.xxx.DBLC	6570.xxx.FD	6619.xxx.BB75 (BB30, BBFD)
Exterior Trim	6619.xxx	6619.xxx	6619.xxx.DM	6619.xxx (x2)
Interior Escutcheon	6513.xxx.KT	6513.xxx.KC	6513.xxx.KN	
Knob/Lever	5073.xxx.IMR	5073.xxx.IMR	5073.xxx.IMR	
Spindle	0530 (2.375″ Half)	0530 (2.375″ Half)	5092 (1.125″ Dummy)	
Cylinder	8323 for 1.75″ door	• (Double)	6761 (Dummy)	• (Double)
Mortise Lock	•	•		•
Blocking Ring		•		•

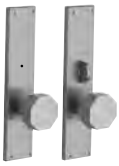

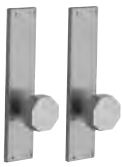

Designer	Entrance	Entrance	Double Cylinder	Privacy	Passage
Exterior Trim	6619.xxx	6513.xxx.KC	6513.xxx.KC	6513.xxx.KE**	
Interior Escutcheon	6513.xxx.KE** (.KE is cut for ER or Turn Knob – if standard Turn Knob is desired, order .KT)	6513.xxx.KT	6513.xxx.KC	6513.xxx.KT or .KP	6513.xxx.KN (x2)
REQUIRED — Knob/Lever	Half Pair	Pair	Pair	Pair	Pair
REQUIRED — Spindle	•	•	•	•	•
REQUIRED — Cylinder	•	•	• (Double)		
REQUIRED — Mortise Lock	• (Lever Strength)	•	•	• (Latch & Bolt or Lock)	• (Latch or Interior Lock)
REQUIRED — Blocking Ring			•		
REQUIRED — Turn Knob	•				

SEE BACK COVER F AP for easy-ordering charts a 1 requirements for doors thick than 1.75″

**(All .KE hardware include 6701 ER cover)

MUST ORDER SEPERATELY
shown in grey

BALTIMORE

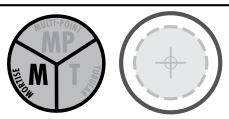

	Item #	Description		Wt.	003, 031, 033 050, 060, 102 112, 150, 151 190, 260, 264	044, 055, 056,
SET	6552.xxx.ENTR	Entrance Trim	Set	3.6	$579	$666
SET	6552.xxx.DBLC	Double Cylinder	Set		$579	$666
SET	6552.xxx.FD	Full Dummy	Set		$579	$666
SET	6552.xxx.ENFD†	1 Active Entrance Set + 1 Full Dummy Set	2 Sets		$1,157†	—
EXT	6552.xxx.DM	Dummy Exterior Trim	Each		$251	$292
INTERIOR		Interior Escutcheon –				
INTERIOR	6767.xxx.KC	Cut for Cylinder (KC), Double Cylinder	Each		$228	$269
INTERIOR	6767.xxx.KE**	Cut for Emergency Release (KE)	Each		$228	$269
INTERIOR	6767.xxx.KN	Cut for Knob (KN), Passage/Dummy	Each		$228	$269
INTERIOR	6767.xxx.KT	Interior Escutcheon w/ Turn Knob (KT)	Each		$269	$315
INTERIOR	6767.xxx.KP	Escutcheons Cut for Privacy (KP)	Pair		$456	$538

†.ENFD only available in 050 & 112, to ensure a finish match on all components.

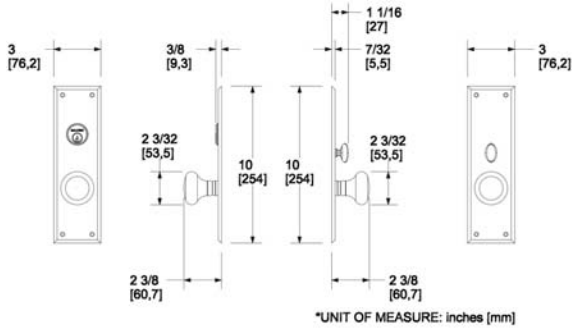

Trim thickness: .1875″ – D

Sets	6552.xxx.ENTR	6552.xxx.DBLC	6552.xxx.FD
Exterior Trim	6767.xxx.KC	6767.xxx.KC	6767.xxx.KN
Interior Escutcheon	6767.xxx.KT	6767.xxx.KC	6767.xxx.KN
Knob/Lever	5015.xxx.MR (Pair)	5015.xxx.MR (Pair)	5015.xxx. MR (Pair)
Spindle	0522 (4″ Swivel)	0522 (4″ Swivel)	5099.004 (x2)
Cylinder	8322 for 1.75″ door	• (Double)	
Mortise Lock	•	•	
Blocking Ring		•	

	Designer	Entrance	Privacy	Passage
	Exterior Trim	6767.xxx.KC	6767.xxx.KE**	
	Interior Escutcheon	6767.xxx.KT	6767.xxx.KT or .KP	6767.xxx.KN (x2)
REQUIRED —	Knob/Lever	5106.xxx.MR (Pair)	5015.xxx.MR (Pair)	5015.xxx.MR (Pair)
REQUIRED —	Spindle	•	•	•
REQUIRED —	Cylinder	•		
REQUIRED —	Mortise Lock	•	• (Latch & Mortise Bolt or Mortise Lock)	• (Latch or Interior Mortise Lock)
REQUIRED —	Blocking Ring			
REQUIRED —	Turn Knob			

MUST ORDER SEPERATELY
shown in grey

**(All .KE hardware include 6701 ER cover)

BARCLAY

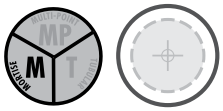

	Item #	Description		Wt.	003, 031, 033 050, 060, 102 112, 150, 151 190, 260, 264	044, 055, 056, 402, 452
SET	6554.xxx.ENTR	Entrance Trim – **Barclay (Knob) Set**	Set		$579	$666
SET	6554.xxx.DBLC	Double Cylinder	Set		$579	$666
SET	6554.xxx.FD	Full Dummy	Set		$579	$666
SET	6554.xxx.ENFD†	1 Active Entrance Set + 1 Full Dummy Set	2 Sets		$1,157 †	—
EXT	6554.xxx.DM	Dummy Exterior only	Each		$251	$292
INTERIOR		Interior Escutcheon –				
INTERIOR	6991.xxx.KC	Cut for Cylinder (KC), Double Cylinder	Each		$228	$269
INTERIOR	6991.xxx.KE**	Cut for Emergency Release (KE)	Each		$228	$269
INTERIOR	6991.xxx.KN	Cut for Knob (KN), Passage/Dummy	Each		$228	$269
INTERIOR	6991.xxx.KT	Interior Escutcheon w/ Turn Knob (KT)	Each		$269	$315
INTERIOR	6991.xxx.KP	Escutcheons Cut for Privacy (KP)	Pair		$456	$538

†.ENFD only available in 050 & 112, to ensure a finish match on all components.

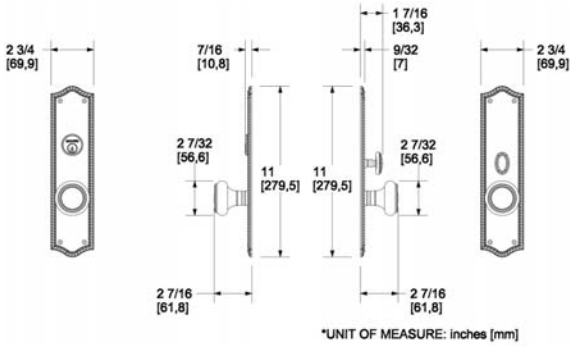

Trim thickness: .375″ – G

Sets	6554.xxx.ENTR	6554.xxx.DBLC	6554.xxx.FD
Exterior Trim	6991.xxx.KC	6991.xxx.KC	
Interior Escutcheon	6991.xxx.KT	6991.xxx.KC	6991.xxx.KN (x2)
Knob/Lever	5064.xxx.MR (Pair)	5064.xxx.MR (Pair)	5064.xxx.MR (Pair)
Spindle	0522 (4″ Swivel)	0522 (4″ Swivel)	0511 (4″ Straight)
Cylinder	8323 (1.75″ Door)	• (Double)	5099.004 (x2)
Mortise Lock	• (Knob Strength)	• (Knob Strength)	
Blocking Ring		•	

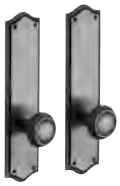

Designer	Passage
Exterior Trim	6991.xxx.KN
Interior Escutcheon	6991.xxx.KN
Knob/Lever	Pair
Spindle	•
Cylinder	
Mortise Lock	• (Latch or Interior Lock
Blocking Ring	
Turn Knob	

REQUIRED —

**(All .KE hardware include 6701 ER cover)

MUST ORDER SEPERATELY
shown in grey

BETHPAGE ¾ ESCUTCHEON

	Item #	Description		Wt.	003, 031, 033 050, 060, 102 112, 150, 151 190, 260, 264	044, 055, 056, 402, 452
SET	M522.xxx.ENTR	Entrance Trim – Knob	Set	9.5	$579	$666
	M522.xxx.RENT (LENT)	Entrance Trim – Lever	Set		$579	$666
	M522.xxx.FD	Full Dummy – Knob	Set		$579	$666
	M522.xxx.RFD (LFD)	Full Dummy – Lever	Set		$579	$666
EXT	M522.xxx	Active Exterior Trim	Each		$251	$292
	M522.xxx.DM	Dummy Exterior Trim	Each		$251	$292
INTERIOR		Interior Escutcheon –				
	M522.xxx.KC	Cut for Cylinder (KC), Double Cylinder	Each		$228	$269
	M522.xxx.KE**	Cut for Emergency Release (KE)	Each		$228	$269
	M522.xxx.KN	Cut for Knob (KN), Passage/Dummy	Each		$228	$269
	M522.xxx.KT	Interior Escutcheon w/ Turn Knob (KT)	Each		$269	$315

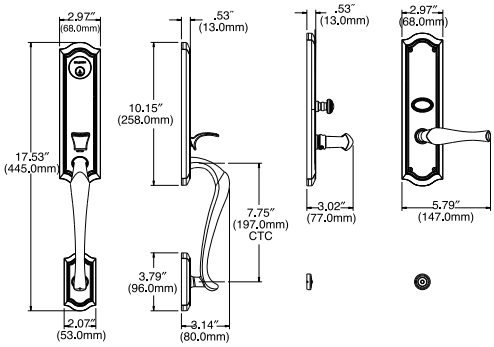

Trim width: 3″
Trim thickness: .53″ – H1

Lever Sets	M522.xxx.RENT (LENT)	M522.xxx.RFD (LFD)
Exterior Trim	M522.xxx	M522.xxx.DM
Interior Escutcheon	M522.xxx.KT	M522.xxx.KN
Knob/Lever	5447V.xxx.LMR (RMR)	5447V.xxx.LMR (RMR)
Spindle	0530 (2.375″ Half)	5092 (1.5″ Dummy)
Cylinder	8325 (1.75″ Door)	6761 (Dummy)
Mortise Lock	•	
Blocking Ring		

Knob Sets	M522.xxx.ENTR	M522.xxx.FD
Exterior Trim	M522.xxx	M522.xxx.DM
Interior Escutcheon	M522.xxx.KT	M522.xxx.KN
Knob/Lever	5077.xxx.IMR	5077.xxx.IMR
Spindle	0530 (2.375″ Half)	5092 (1.5″ Dummy)
Cylinder	8325 (1.75″ Door)	6761 (Dummy)
Mortise Lock	•	
Blocking Ring		

SEE BACK COVER FLAP for easy-ordering charts and requirements for doors thicker than 1.75″

BISMARK

	Item #	Description		Wt.	003, 031, 033 050, 060, 102 112, 150, 151 190, 260, 264	044, 055, 056 402, 452
SET	6942.xxx.ENTR	Entrance Trim	Set	3.0	$579	$666
SET	6942.xxx.DBLC	Double Cylinder	Set		$579	$666
SET	6942.xxx.FD	Full Dummy	Set		$579	$666
SET	6942.xxx.ENFD†	1 Active Entrance Set + 1 Full Dummy Set	2 Sets		$1,157	-
EXT	6942.xxx.RDM (LDM)	Dummy Exterior only	Each		$251	$292
INTERIOR		Interior Escutcheon –				
INTERIOR	6986.xxx.KC	Cut for Cylinder (KC), Double Cylinder	Each		$228	$269
INTERIOR	6986.xxx.KE**	Cut for Emergency Release (KE)	Each		$228	$269
INTERIOR	6986.xxx.KN	Cut for Knob (KN), Passage/Dummy	Each		$228	$269
INTERIOR	6986.xxx.KT	Interior Escutcheon w/ Turn Knob (KT)	Each		$269	$315

†.ENFD only available in 050 & 112, to ensure a finish match on all components.

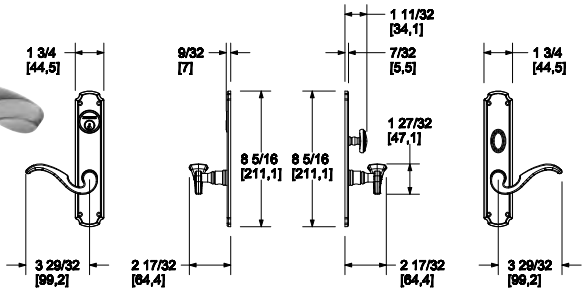

*UNIT OF MEASURE: inches [mm]

Trim thickness: .125″ – C

Sets	6942.xxx.ENTR	6942.xxx.DBLC	6942.xxx.FD
Exterior Trim	6986.xxx.KC	6986.xxx.KC	6986.xxx.KN
Interior Escutcheon	6986.xxx.KT	6986.xxx.KC	6986.xxx.KN
Knob/Lever	5152.xxx.MR (Pair)	5152.xxx.MR (Pair)	5152.xxx.MR (Pair)
Spindle	0522 (4″ Swivel)	0522 (4″ Swivel)	0511 (4″ Straight)
Cylinder	8322 (1.75″ Door)	8321 (1.75″ Door)	5099.004 (x2)
Mortise Lock	• (Lever Strength)	• (Lever Strength)	
Blocking Ring		• 8440.xxx.1	

Designer	Entrance	Privacy	Double Cylinder
Exterior Trim	6986.xxx.KC	6986.xxx.KE**	
Interior Escutcheon	6986.xxx.KT	6986xxx.KT	6986.xxx.KN (x2)
REQUIRED — Knob/Lever	Pair	Pair	Pair
REQUIRED — Spindle	•	•	•
REQUIRED — Cylinder	•		
REQUIRED — Mortise Lock	•	• (Latch & Bolt or Lock)	• (Latch & Bolt or Interior Lock)
REQUIRED — Blocking Ring			
REQUIRED — Turn Knob			

SEE BACK COVER FLAP for easy-ordering charts and requirements for doors thicker than 1.75″

**(All .KE hardware include 6701 ER cover)

MUST ORDER SEPERATELY
shown in grey

BOULDER ¾ ESCUTCHEON

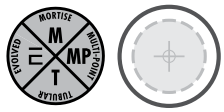

	Item #	Description		Wt.	003, 031, 033 050, 060, 102 112, 150, 151 190, 260, 264	044, 055, 056, 402, 452
SET	M512.xxx.ENTR	Entrance Trim – Knob	Set	9.5	$579	$666
	M512.xxx.RENT (LENT)	Entrance Trim – Lever	Set		$579	$666
	M512.xxx.FD	Full Dummy – Knob	Set		$579	$666
	M512.xxx.RFD (LFD)	Full Dummy – Lever	Set		$579	$666
EXT	M512.xxx	Active Exterior Trim	Each		$251	$292
	M512.xxx.DM	Dummy Exterior Trim	Each		$251	$292
INTERIOR	M512.xxx.KC	Interior Escutcheon – Cut for Cylinder (KC), Double Cylinder	Each		$228	$269
	M512.xxx.KE**	Cut for Emergency Release (KE)	Each		$228	$269
	M512.xxx.KN	Cut for Knob (KN), Passage/Dummy	Each		$228	$269
	M512.xxx.KT	Interior Escutcheon w/ Turn Knob (KT)	Each		$269	$315

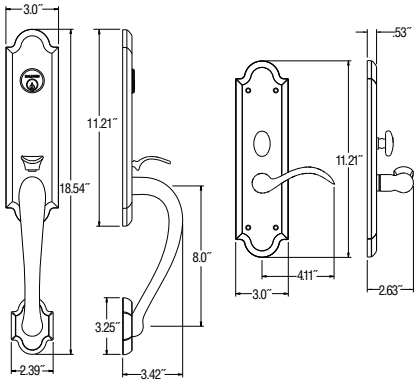

Trim width: 3″
Trim thickness: .53″ – H1

Lever Sets	M512.xxx.RENT (LENT)	M512.xxx.RDBL (LDBL)	M512.xxx.RFD (LFD)
Exterior Trim	M512.xxx	M512.xxx	M512.xxx.DM
Interior Escutcheon	M512.xxx.KT	M512.xxx.KC	M512.xxx.KN
Knob/Lever	5452V.xxx.LMR (RMR)	5452V.xxx.LMR (RMR)	5452V.xxx.LMR (RMR)
Spindle	0530 (2.375″ Half)	0530 (2.25″ Half)	5092 (1.5″ Dummy)
Cylinder	8325 (1.75″ Door)	(Double)	6761 (Dummy)
Mortise Lock	•	•	
Blocking Ring		•	

Knob Sets	M512.xxx.ENTR	M512.xxx.DBLC	M512.xxx.FD
Exterior Trim	M512.xxx	M512.xxx	M512.xxx.DM
Interior Escutcheon	M512.xxx.KT	M512.xxx.KC	M512.xxx.KN
Knob/Lever	5024.xxx.IMR	5024.xxx.IMR	5024.xxx.IMR
Spindle	0530 (2.375″ Half)	0530 (2.25″ Half)	5092 (1.5″ Dummy)
Cylinder	8325 (1.75″ Door)	(Double)	6761 (Dummy)
Mortise Lock	•	•	
Blocking Ring		•	

SEE BACK COVER FLAP for easy-ordering charts and requirements for doors thicker than 1.75″

***(All .KE hardware include 6701 ER cover)*

BOULDER FULL ESCUTCHEON

	Item #	Description		Wt.	003, 031, 033 050, 060, 102 112, 150, 151 190, 260, 264	044, 055, 056, 402, 452
SET	M514.xxx.ENTR	Entrance Trim – Knob	Set	9.5	$753	$842
	M514.xxx.RENT (LENT)	Entrance Trim – Lever	Set		$753	$842
	M514.xxx.FD	Full Dummy – Knob	Set		$753	$842
	M514.xxx.RFD (LFD)	Full Dummy – Lever	Set		$753	$842
EXT	M514.xxx	Active Exterior Trim	Each		$427	$468
	M514.xxx.DM	Dummy Exterior Trim	Each		$427	$468
INTERIOR		Interior Escutcheon –				
	M512.xxx.KC	Cut for Cylinder (KC), Double Cylinder	Each		$228	$269
	M512.xxx.KE**	Cut for Emergency Release (KE)	Each		$228	$269
	M512.xxx.KN	Cut for Knob (KN), Passage/Dummy	Each		$228	$269
	M512.xxx.KT	Interior Escutcheon w/ Turn Knob (KT)	Each		$269	$315

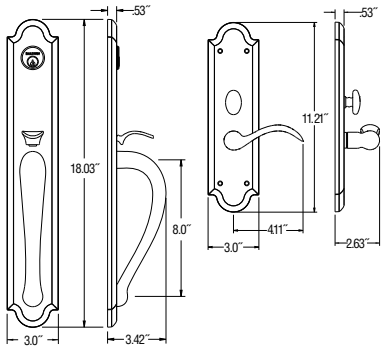

Trim width: 3″
Trim thickness: .53″ – H1

Lever Sets	M514.xxx.RENT (LENT)	M514.xxx.RDBL (LDBL)	M514.xxx.RFD (LFD)
Exterior Trim	M514.xxx	M514.xxx	M514.xxx.DM
Interior Escutcheon	M512.xxx.KT	M512.xxx.KC	M512.xxx.KN
Knob/Lever	5452V.xxx.LMR (RMR)	5452V.xxx.LMR (RMR)	5452V.xxx.LMR (RMR)
Spindle	0530 (2.375″ Half)	0530 (2.25″ Half)	5092 (1.5″ Dummy)
Cylinder	8325 (1.75″ Door)	• (Double)	6761 (Dummy)
Mortise Lock	•	•	
Blocking Ring		•	

Knob Sets	M514.xxx.ENTR	M514.xxx.DBLC	M514.xxx.FD
Exterior Trim	M514.xxx	M514.xxx	M514.xxx.DM
Interior Escutcheon	M512.xxx.KT	M512.xxx.KC	M512.xxx.KN
Knob/Lever	5024.xxx.IMR	5024.xxx.IMR	5024.xxx.IMR
Spindle	0530 (2.375″ Half)	0530 (2.25″ Half)	5092 (1.5″ Dummy)
Cylinder	8325 (1.75″ Door)	(Double)	6761 (Dummy)
Mortise Lock	•	•	
Blocking Ring		•	

SEE BACK COVER FLAP for easy-ordering charts and requirements for doors thicker than 1.75″

***(All .KE hardware include 6701 ER cover)*

BRISTOL

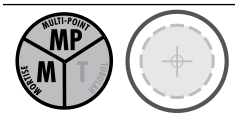

	Item #	Description		Wt.	003, 031, 033 050, 060, 102 112, 150, 151 190, 260, 264	044, 055, 056, 402, 452
SET	6963.xxx.RENT (LENT)	Entrance Trim – **Bristol**	Set		$930	$1,017
	6963.xxx.RDBL (LBDL)	Double Cylinder	Set		$930	$1,017
	6963.xxx.RFD (LFD)	Full Dummy	Set		$930	$1,017
	6963.xxx.ENFD†	1 Active Entrance Set + 1 Full Dummy Set	2 Sets		$1,858†	--
	6627.xxx.BB75	Entrance Back-to-Back - 1.75" door	Set		$1,279	$1,368
	6627.xxx.BB30	Entrance Back-to-Back - up to 3" door	Set		$1,279	$1,368
	6627.xxx.BBFD	Dummy Back-to-Back	Set		$1,279	$1,368
EXT	6627.xxx	Active Exterior Trim only	Each		$689	$743
	6627.xxx.DM	Dummy Exterior only	Each		$689	$743
EXT	6939.xxx.RDM (LDM)	Dummy Exterior only	Each		$251	$292

NOTE: For interior trim, see Barclay.
†.ENFD only available in 050 & 112, to ensure a finish match on all components.

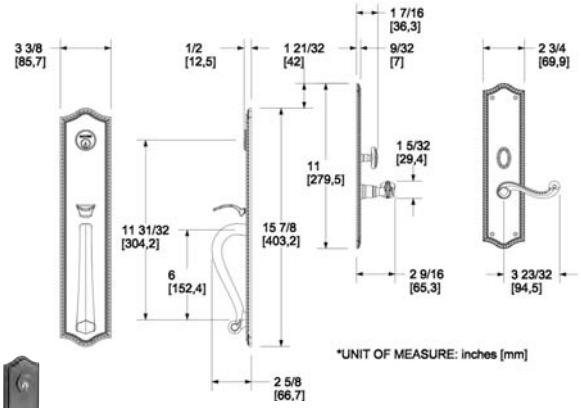

Trim thickness: .375″ – G

Sets	6963.xxx.LENT (RENT)	6963.xxx.LDBL (RDBL)	6963.xxx.LFD (RFD)	6627.xxx.BB75 (BB30, BBFD)
Exterior Trim	6627.xxx	6627.xxx	6627.xxx.DM	6627.xxx (x2)
Interior Escutcheon	6991.xxx.KT	6991.xxx.KC	6991.xxx.KN	
Knob/Lever	5104.xxx.RMR (LMR)	5104.xxx.RMR (LMR)	5104.xxx.RMR (LMR)	
Spindle	0530 (2.375″ Half)	0530 (2.375″ Half)	5092 (1.125″ Dummy)	•
Cylinder	8323 (1.75″ Door)	• (Double)	6761 (Dummy)	• (Double)
Mortise Lock	• (Lever Strength)	• (Lever Strength)		•
Blocking Ring		•		•

In an effort to simplify the mortise trim offering, some escutcheon trim sets will no longer be available pre-configured. However, these configurations are still available a la carte. See breakouts below by function.

Sets	Entry	Double Cylinder	Full Dummy
Exterior Trim	6991.xxx.KC	6991.xxx.KC	6991.xxx.KN
Interior Escutcheon	6991.xxx.KT	6991.xxx.KC	6991.xxx.KN
Knob/Lever	5104.xxx.MR (Pair)	5104.xxx.MR (Pair)	5104.xxx.MR (Pair)
Spindle	0522 (4″ Swivel)	0522 (4″ Swivel)	5099.004 (x2)
Cylinder	•	• (Double)	
Mortise Lock	• (Lever Strength)	• (Lever Strength)	
Blocking Ring		•	

Designer	Entrance	Privacy
Exterior Trim	6627.xxx	6991.xxx.KE**
Interior Escutcheon	6991.xxx.KT	6991.xxx.KT or .KP
Knob/Lever	Half Pair	Pair
Spindle	•	•
Cylinder	•	
Mortise Lock	•	•
Blocking Ring		
Turn Knob		

REQUIRED —

MUST ORDER SEPERATELY
shown in grey

**(All .KE hardware include 6701 ER cover)

BALDWIN

CODY ¾ ESCUTCHEON

	Item #	Description		Wt.	003, 031, 033 050, 060, 102 112, 150, 151 190, 260, 264	044, 055, 056, 402, 452
SET	M502.xxx.ENTR	Entrance Trim – Knob	Set	9.5	$579	$666
	M502.xxx.RENT (LENT)	Entrance Trim – Lever	Set		$579	$666
	M502.xxx.FD	Full Dummy – Knob	Set		$579	$666
	M502.xxx.RFD (LFD)	Full Dummy – Lever	Set		$579	$666
EXT	M502.xxx	Active Exterior Trim	Each		$251	$292
	M502.xxx.DM	Dummy Exterior Trim	Each		$251	$292
INTERIOR		Interior Escutcheon –				
	M502.xxx.KC	Cut for Cylinder (KC), Double Cylinder	Each		$228	$269
	M502.xxx.KE**	Cut for Emergency Release (KE)	Each		$228	$269
	M502.xxx.KN	Cut for Knob (KN), Passage/Dummy	Each		$228	$269
	M502.xxx.KT	Interior Escutcheon w/ Turn Knob (KT)	Each		$269	$315

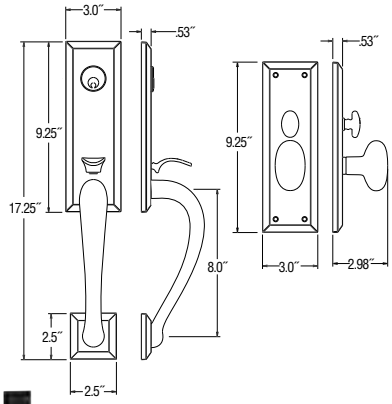

Trim width: 3″
Trim thickness: .53″ – H1

Lever Sets	M502.xxx.RENT (LENT)	M502.xxx.RDBL (LDBL)	M502.xxx.RFD (LFD)
Exterior Trim	M502.xxx	M502.xxx	M502.xxx.DM
Interior Escutcheon	M502.xxx.KT	M502.xxx.KC	M502.xxx.KN
Knob/Lever	5452V.xxx.LMR (RMR)	5452V.xxx.LMR (RMR)	5452V.xxx.LMR (RMR)
Spindle	0530 (2.375″ Half)	0530 (2.25″ Half)	5092 (1.5″ Dummy)
Cylinder	8325 (1.75″ Door)	(Double)	6761 (Dummy)
Mortise Lock	• (Lever Strength)	•	
Blocking Ring		•	

Knob Sets	M502.xxx.ENTR	M502.xxx.DBLC	M502.xxx.FD
Exterior Trim	M502.xxx	M502.xxx	M502.xxx.DM
Interior Escutcheon	M502.xxx.KT	M502.xxx.KC	M502.xxx.KN
Knob/Lever	5024.xxx.IMR	5024.xxx.IMR	5024.xxx.IMR
Spindle	0530 (2.375″ Half)	0530 (2.25″ Half)	5092 (1.5″ Dummy)
Cylinder	8325 (1.75″ Door)	(Double)	6761 (Dummy)
Mortise Lock	• (Lever Strength)	•	
Blocking Ring		•	

SEE BACK COVER FLAP for easy-ordering charts and requirements for doors thicker than 1.75″

CODY FULL ESCUTCHEON

	Item #	Description		Wt.	003, 031, 033 050, 060, 102 112, 150, 151 190, 260, 264	044, 055, 056 402, 452
SET	M504.xxx.ENTR	Entrance Trim – Knob	Set	9.5	$753	$842
	M504.xxx.RENT (LENT)	Entrance Trim – Lever	Set		$753	$842
	M504.xxx.FD	Full Dummy – Knob	Set		$753	$842
	M504.xxx.RFD (LFD)	Full Dummy – Lever	Set		$753	$842
EXT	M504.xxx	Active Exterior Trim	Each		$427	$468
	M504.xxx.DM	Dummy Exterior Trim	Each		$427	$468
INTERIOR		Interior Escutcheon –				
	M502.xxx.KC	Cut for Cylinder (KC), Double Cylinder	Each		$228	$269
	M502.xxx.KE**	Cut for Emergency Release (KE)	Each		$228	$269
	M502.xxx.KN	Cut for Knob (KN), Passage/Dummy	Each		$228	$269
	M502.xxx.KT	Interior Escutcheon w/ Turn Knob (KT)	Each		$269	$315

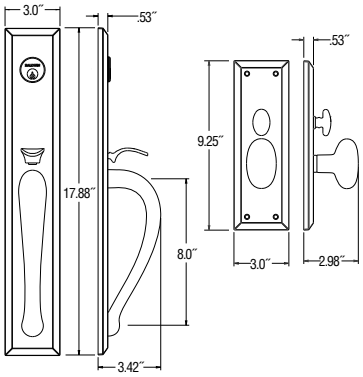

Trim width: 3″
Trim thickness: .53″ – H1

Lever Sets	M504.xxx.RENT (LENT)	M504.xxx.RDBL (LDBL)	M504.xxx.RFD (LFD)
Exterior Trim	M504.xxx	M504.xxx	M504.xxx.DM
Interior Escutcheon	M502.xxx.KT	M502.xxx.KC	M502.xxx.KN
Knob/Lever	5452V.xxx.LMR (RMR)	5452V.xxx.LMR (RMR)	5452V.xxx.LMR (RMR)
Spindle	0530 (2.375″ Half)	0530 (2.25″ Half)	5092 (1.5″ Dummy)
Cylinder	8325 (1.75″ Door)	• (Double)	6761 (Dummy)
Mortise Lock	•	•	
Blocking Ring		•	

Knob Sets	M504.xxx.ENTR	M504.xxx.DLBC	M504.xxx.FD
Exterior Trim	M504.xxx	M504.xxx	M504.xxx.DM
Interior Escutcheon	M502.xxx.KT	M502.xxx.KC	M502.xxx.KN
Knob/Lever	5024.xxx.IMR	5024.xxx.IMR	5024.xxx.IMR
Spindle	0530 (2.375″ Half)	0530 (2.25″ Half)	5092 (1.5″ Dummy)
Cylinder	8325 (1.75″ Door)	(Double)	6761 (Dummy)
Mortise Lock	•	•	
Blocking Ring		•	

CONCORD

	Item #	Description		Wt.	003, 031, 033 050, 060, 102 112, 150, 151 190, 260, 264	044, 055, 056
SET	6571.xxx.ENTR	Entrance Trim	Set	3.8	$579	$666
SET	6571.xxx.DBLC	Double Cylinder	Set		$579	$666
SET	6571.xxx.FD	Full Dummy	Set		$579	$666
SET	6571.xxx.ENFD†	1 Active Entrance Set + 1 Full Dummy Set	2 Sets		$1,157 †	—
EXT	6604.xxx	Active Exterior Trim only	Each		$251	$292
EXT	6604.xxx.DM	Dummy Exterior only	Each		$251	$292
INTERIOR		Interior Escutcheon –				
INTERIOR	6794.xxx.KC	Cut for Cylinder (KC), Double Cylinder	Each		$228	$269
INTERIOR	6794.xxx.KE	Cut for Emergency Release (KE)	Each		$228	$269
INTERIOR	6794.xxx.KN	Cut for Knob (KN), Passage/Dummy	Each		$228	$269
INTERIOR	6794.xxx.KT	Interior Escutcheon w/ Turn Knob (KT)	Each		$269	$315

†.ENFD only available in 050 & 112, to ensure a finish match on all components.

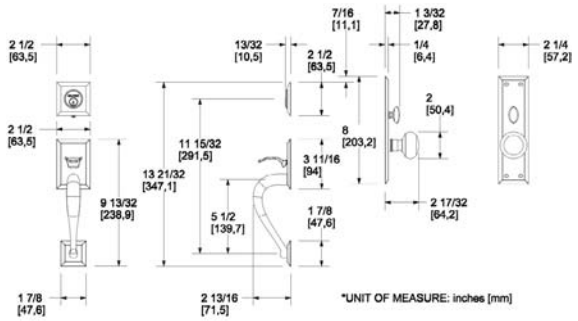

Trim width: 2.5″
Trim thickness: .25″ – E

Sets	6571.xxx.ENTR	6571.xxx.DBLC	6571.xxx.FD
Exterior Trim	6604.xxx	6604.xxx	6604.xxx.DM
Interior Escutcheon	6794.xxx.KT	6794.xxx.KC	6794.xxx.KN
Knob/Lever	5000.xxx.IMR	5000.xxx.IMR	5000.xxx.IMR
Spindle	0530 (2.375″ Half)	0530 (2.375″ Half)	5092 (1.125″ Dummy)
Cylinder	8323 (1.75″ Door)	• (Double)	6761 (Dummy)
Mortise Lock	•	•	
Blocking Ring		•	

Designer	Entrance	Entrance	Double Cylinder	Privacy	Passage
Exterior Trim	6604.xxx	6794.xxx.KC	6794.xxx.KC	6794.xxx.KE**	
Interior Escutcheon	6794.xxx.KT	6794.xxx.KT	6794.xxx.KC	6794.xxx.KT	6794.xxx.KN (x2)
Knob/Lever	Half Pair	Pair	Pair	Pair	Pair
Spindle	•		•	•	•
Cylinder	•	•	• (Double)		
Mortise Lock	• (Lever Strength)	•	•	• (Latch & Bolt or Lock)	• (Latch & Bolt or Lock)
Blocking Ring			•		
Turn Knob					

REQUIRED —

**(All .KE hardware include 6701 ER cover)

MUST ORDER SEPERATELY
shown in grey

EDINBURGH

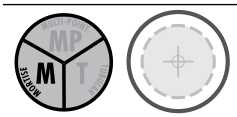

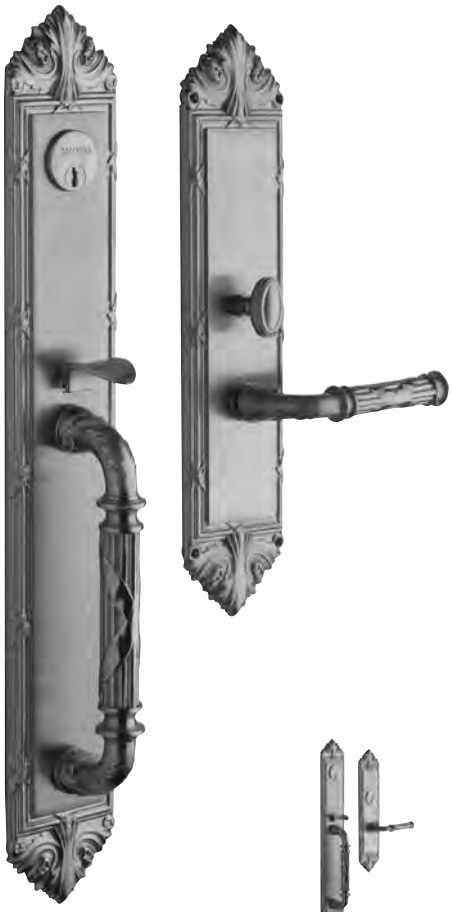

	Item #	Description		Wt.	003, 031, 033 050, 060, 102 112, 150, 151 190, 260, 264	044, 055, 056, 402, 452
SET	6952.xxx.RENT (LENT)	Entrance Trim – **Edinburgh**	Set	9.5	$930	$1,017
SET	6952.xxx.RDBL (LDBL)	Double Cylinder	Set		$930	$1,017
SET	6952.xxx.RFD (LFD)	Full Dummy	Set		$930	$1,017
SET	6952.xxx.ENFD†	1 Active Entrance Set + 1 Full Dummy Set	2 Sets		$1,858†	--
SET	6652.xxx.BB75	Entrance Back-to-Back – 1.75″ door	Set		$1,279	$1,368
SET	6652.xxx.BB30	Entrance Back-to-Back – up to 3″ door	Set		$1,279	$1,368
SET	6652.xxx.BBFD	Dummy Back-to-Back	Set		$1,279	$1,368
EXT	6652.xxx	Active Exterior Trim only	Each		$689	$743
EXT	6652.xxx.DM	Dummy Exterior only	Each		$689	$743
EXT	6962.xxx.DM	Dummy Exterior only	Each		$251	$292
INT		Interior Escutcheon –				
INT	6789.xxx.KC	Cut for Cylinder (KC), Double Cylinder	Each		$228	$269
INT	6789.xxx.KE**	Cut for Emergency Release (KE)	Each		$228	$269
INT	6789.xxx.KN	Cut for Knob (KN), Passage/Dummy	Each		$228	$269
INT	6789.xxx.KT	Interior Escutcheon w/ Turn Knob (KT)	Each		$269	$315
INT	6789.xxx.KP	Escutcheons Cut for Privacy (KP)	Pair		$456	$538

†.ENFD only available in 050 & 112, to ensure a finish match on all components.

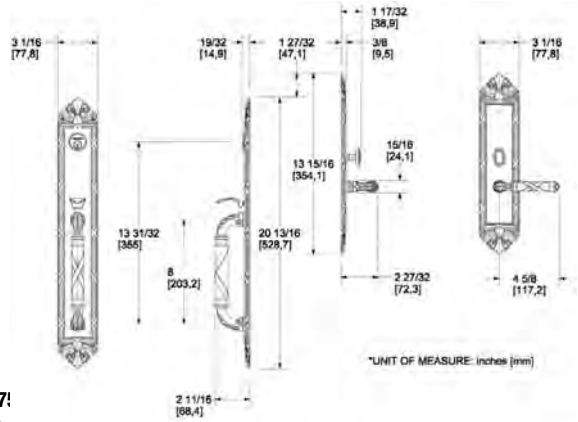

Edinburgh **Sets**	6952.xxx.LENT (RENT)	6952.xxx.LDBL (RDBL)	6952.xxx.LFD (RFD)	6652.xxx.BB75 (BB30, BBFD)
Exterior Trim	6652.xxx	6652.xxx	6652.xxx.DM	6652.xxx (x2)
Interior Escutcheon	6789.xxx.KT	6789.xxx.KC	6789.xxx.KN	
Knob/Lever	5122.xxx.RMR (.LMR)	5122.xxx.RMR (.LMR)	5122.xxx.RMR (.LMR)	
Spindle	0530 (2.375″ Half)	0530 (2.375″ Half)	5092 (1.125″ Dummy)	
Cylinder	8324 (1.75″ Door)	• (Double)	6761 (Dummy)	• (Double)
Mortise Lock	• (Lever Strength)	•		•
Blocking Ring		•		•

Trim width: 3.0″
Trim thickness: .435″ – H

In an effort to simplify the mortise trim offering, some escutcheon trim sets will no longer be available pre-configured. However, these configurations are still available a la carte. See breakouts below by function.

Formerly the Fenwick Configuration

Sets	Entry	Double Cylinder	Full Dummy
Exterior Trim	6789.xxx.KC	6789.xxx.KC	
Interior Escutcheon	6789.xxx.KT	6789.xxx.KC	6789.xxx.KN (x2)
Knob/Lever	5122.xxx.MR (Pair)	5122.xxx.MR (Pair)	5122.xxx.MR (Pair)
Spindle	0522	0522	0511
Cylinder	•	• (Double)	5099.004 (x2)
Mortise Lock	• (Lever Strength)	• (Lever Strength)	
Blocking Ring		•	

Designer	Edinburgh Entrance	6789 Privacy
Exterior Trim	6652.xxx	6789.xxx.KE**
Interior Escutcheon	6789.xxx.KT	6789.xxx.KT
Knob/Lever	Half Pair	Pair
Spindle	•	•
Cylinder	•	
Mortise Lock	•	• Latch & Bolt, Lock or Latch
Blocking Ring		
Turn Knob		

REQUIRED —

SEE BACK COVER FLAP for easy-ordering charts and requirements for doors thicker than 1.75″

MUST ORDER SEPERATELY
shown in grey

**(All .KE hardware include 6701 ER cover)

HAMILTON

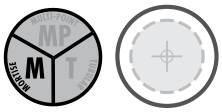

	Item #	Description		Wt.	003, 031, 033 050, 060, 102 112, 150, 151 190, 260, 264	044, 055, 056, 402, 452
SET	6544.xxx.RENT (LENT)	Entrance Trim – **Hamilton**	Set	9.0	$930	$1,017
SET	6544.xxx.RDBL (LDBL)	Double Cylinder	Set		$930	$1,017
SET	6544.xxx.RFD (LFD)	Full Dummy	Set		$930	$1,017
SET	6544.xxx.ENFD†	1 Active Entrance Set + 1 Full Dummy Set	2 Sets		$1,858 †	—
SET	6622.xxx.BB75	Entrance Back-to-Back – 1.75″ door	Set		$1,279	$1,368
SET	6622.xxx.BB30	Entrance Back-to-Back – up to 3″ door	Set		$1,279	$1,368
SET	6622.xxx.BBFD	Dummy Back-to-Back	Set		$1,279	$1,368
EXT	6622.xxx	Active Exterior Trim only	Each		$689	$743
EXT	6622.xxx.DM	Dummy Exterior only	Each		$689	$743
INTERIOR		Interior Escutcheon –				
INTERIOR	6791.xxx.KC	Cut for Cylinder (KC), Double Cylinder	Each		$228	$269
INTERIOR	6791.xxx.KE**	Cut for Emergency Release (KE**)	Each		$228	$269
INTERIOR	6791.xxx.KN	Cut for Knob (KN), Passage/Dummy	Each		$228	$269
INTERIOR	6791.xxx.KT	Interior Escutcheon w/ Turn Knob (KT)	Each		$269	$315

†.ENFD only available in 050 & 112, to ensure a finish match on all components.

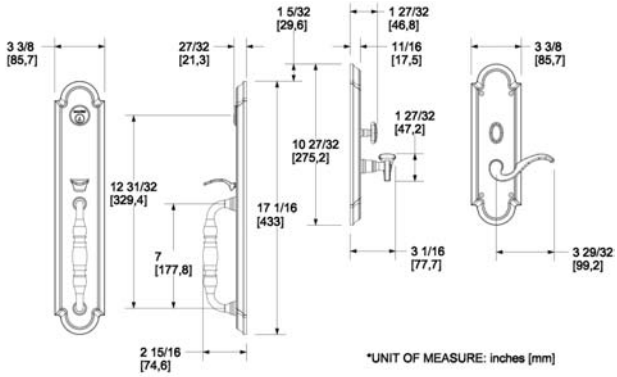

Hamilton **Sets**	6544.xxx.RENT (LENT)	6544.xxx.RDBL (LDBL)	6544.xxx.RFD (LFD)	6622.xxx.BB75 (BB30, BBFD)
Exterior Trim	6622.xxx	6622.xxx	6622.xxx.DM	6622.xxx (x2)
Interior Escutcheon	6791.xxx.KT	6791.xxx.KC	6791.xxx.KN	
Knob/Lever	5152.xxx.LMR (RMR)	5152.xxx.LMR (RMR)	5152.xxx.LMR (RMR)	
Spindle	0531 (2.875″ Half)	0531 (2.875″ Half)	5077 (1.5″ Dummy)	
Cylinder	8326 for 1.75″ door	• (Double)	6761 (Dummy)	• (Double)
Mortise Lock	• (Lever Strength)	•		•
Blocking Ring		•		•

Trim width: 3.375″
Trim thickness: .75″ – J

In an effort to simplify the mortise trim offering, some escutcheon trim sets will no longer be available pre-configured. However, these configurations are still available a la carte. See breakouts below by function.

Formerly the Stanford Configuration **Sets**	Entry	Double Cylinder	Full Dummy
Exterior Trim	6791.xxx.KC	6791.xxx.KC	
Interior Escutcheon	6791.xxx.KT	6791.xxx.KC	6791.xxx.KN (x2)
Knob/Lever	5152.xxx.MR (Pair)	5152.xxx.MR (Pair)	5152.xxx.MR (Pair)
Spindle	0524 (5.5″ Swivel)	0524 (5.5″ Swivel)	0514 (5.5″ Straight)
Cylinder	•	• (Double)	5099.004 (x2)
Mortise Lock	• (Lever Strength)	• (Lever Strength)	
Blocking Ring		•	

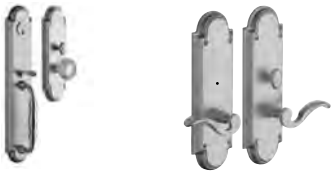

Designer	Hamilton Entrance	6791 Privacy
Exterior Trim	6622.xxx	6791.xxx.KE**
Interior Escutcheon	6791.xxx.KT	6791.xxx.KT
Knob/Lever	5064.xxx.IMR	Pair
Spindle	•	•
Cylinder	•	
Mortise Lock	•	• Latch & Mortise Bolt or Lock
Blocking Ring		

REQUIRED —

SEE BACK COVER FLAP for easy-ordering charts and requirements for doors thicker than 1.75″

**(All .KE hardware include 6701 ER cover)

MUST ORDER SEPERATELY
shown in grey

HOLLYWOOD HILLS HANDLESET

	Item #	Description		Wt.	003, 031, 033 050, 060, 102 112, 150, 151 190, 260, 264	044, 055, 056 402, 452
SET	6946.xxx.ENTR	Entrance Trim- Hollywood Hills Handleset	Set		$1,046	$1,134
SET	6946.xxx.DBLC	Double Cylinder	Set		$1,046	$1,134
SET	6946.xxx.FD	Full Dummy	Set		$1,046	$1,134
SET	6946.xxx.ENFD†	1 Active Entrance Set + 1 Full Dummy Set	2 Sets		$2,091†	—
EXT	6946.xxx	Active Exterior Trim	Each		$649	$689
EXT	6946.xxx.DM	Dummy Exterior Trim	Each		$649	$689
INTERIOR	6535.xxx.KCOS (KCIS)	Exterior Escutcheons (OS), Interior Cut for Cylinder (KC), Double Cylinder	Each		$292	$340
INTERIOR	6535.xxx.KEOS (KEIS)**	Cut for Emergency Release (KE)	Each		$292	$340
INTERIOR	6535.xxx.KNOS (KNIS)	Cut for Knob (KN), Passage/Dummy	Each		$292	$340
INTERIOR	6535.xxx.KTIS	Interior Escutcheon w/ Turn Knob (KT)	Each		$340	$386

†.ENFD only available in 050 & 112, to ensure a finish match on all components.

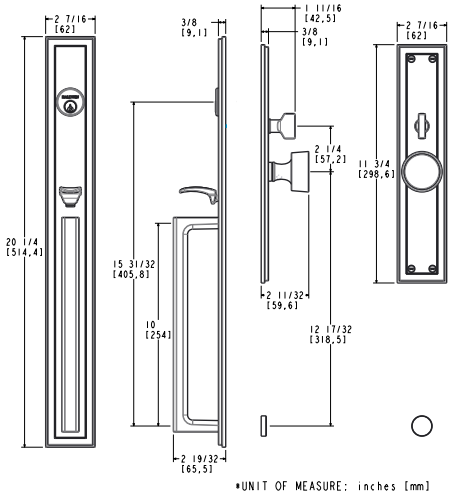

Sets	6946.xxx.ENTR	6946.xxx.DBLC	6946.xxx.FD
Exterior Trim	6946.xxx	6946.xxx	6946.xxx.DM
Interior Escutcheon	6535.xxx.KTIS	6535.xxx.KCIS	6535.xxx.KNIS
Knob/Lever	K008.xxx.IMR	K008.xxx.IMR	K008.xxx.IMR
Spindle	0530 (2.375" Half)	0530 (2.375" Half)	5077 (1.125" Dummy)
Cylinder	8323 for 1.75" doors	• (Double)	6761 (Dummy)
Mortise Lock	• (Knob Strenght)	• (Knob Strenght)	
Blocking Ring		•	

Trim width: 2.44″
Trim thickness: .375″ – G

Designer	Entrance
Exterior Trim	6946.xxx
Interior Escutcheon	6535.xxx.KTIS
Knob/Lever	IMR / RMR / LMR
Spindle	•
Cylinder	•
Mortise Lock	•
Blocking Ring	

REQUIRED —

SEE BACK COVER FLAP for easy-ordering charts and requirements for doors thicker than 1.75″

MUST ORDER SEPERATELY
shown in grey

**(All .KE hardware include 6701 ER cover)

BALDWIN

HOLLYWOOD HILLS: KNOB X KNOB TRIM

	Item #	Description		Wt.	003, 031, 033 050, 060, 102 112, 150, 151 190, 260, 264	044, 055, 056, 402, 452
SET	6945.xxx.ENTR	Entrance Trim – **Hollywood Hills (Knob) Set**	Set		$689	$783
SET	6945.xxx.DBLC	Double Cylinder	Set		$689	$783
SET	6945.xxx.FD	Full Dummy	Set		$689	$783
SET	6945.xxx.ENFD†	1 Active Entrance Set + 1 Full Dummy Set	2 Sets		$1,379†	—
EXT	6510.xxx.DM	Dummy Exterior Trim	Each		$345	$398
INT/EXT		Exterior Escutcheons (OS), Interior Escutcheon (IS)				
INT/EXT	6535.xxx.KCOS (KCIS)	Cut for Cylinder (KC), Double Cylinder	Each		$292	$340
INT/EXT	6535.xxx.KEOS (KEIS)**	Cut for Emergency Release (KE)	Each		$292	$340
INT/EXT	6535.xxx.KNOS (KNIS)	Cut for Knob (KN), Passage/Dummy	Each		$292	$340
INT/EXT	6535.xxx.KTIS	Interior Escutcheon w/ Turn Knob (KT)	Each		$340	$386

†.ENFD only available in 050 & 112, to ensure a finish match on all components.

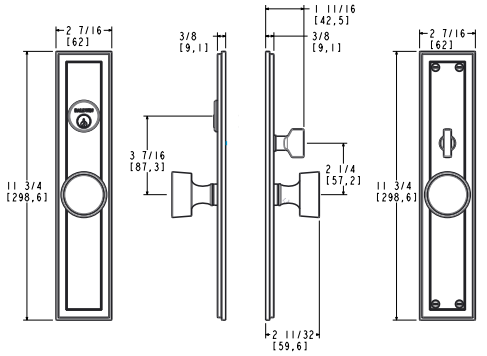

Sets	6945.xxx.ENTR	6945.xxx.DBLC	6945.xxx.FD
Exterior Trim	6535.xxx.KCOS	6535.xxx.KCOS	6510.xxx.DM
Interior Escutcheon	6535.xxx.KTIS	6535.xxx.KCIS	6535.xxx.KNIS
Knob/Lever	K008.xxx.MR	K008.xxx.MR	K008.xxx.MR
Spindle			
Cylinder	8323 (1.75" Door)	• (Double)	6761 (Dummy)
Mortise Lock	• (Knob Strenght)	• (Knob Strenght)	
Blocking Ring		•	

Trim width: 2.44″
Trim thickness: .375″ – G

Designer	Entrance	Privacy	Passage
Exterior Trim	6535.xxx.KCOS	6535.xxx.KEOS	6535.xxx.KNOS
Interior Escutcheon	6535.xxx.KTIS	6535.xxx.KTIS	6535.xxx.KNIS
Knob/Lever	Pair	Pair	Pair
Spindle	•	•	•
Cylinder	•		
Mortise Lock	•	• (Latch & Bolt or Lock)	• (Latch & Bolt or Lock)
Blocking Ring			

REQUIRED —

SEE BACK COVER FLAP for easy-ordering charts and requirements for doors thicker than 1.75″

**(All .KE hardware include 6701 ER cover)

MUST ORDER SEPERATELY
shown in grey

HOUSTON

	Item #	Description		Wt.	003, 031, 033 050, 060, 102 112, 150, 151 190, 260, 264	044, 055, 056, 402, 452
SET	6973.xxx.ENTR	Entrance Trim	Set	4.0	$579	$666
SET	6973.xxx.DBLC	Double Cylinder	Set		$579	$666
SET	6973.xxx.FD	Full Dummy	Set		$579	$666
SET	6973.xxx.ENFD†	1 Active Entrance Set + 1 Full Dummy Set	2 Sets		$1,157†	—
EXT	6973.xxx.RDM (LDM)	Dummy Exterior only	Each		$251	$292
INTERIOR		Interior Escutcheon –				
INTERIOR	6506.xxx.KCOS (KCIS)	Cut for Cylinder (KC), Double Cylinder	Each		$228	$269
INTERIOR	6506.xxx.KEOS (KEIS)	Cut for Emergency Release (KE)	Each		$228	$269
INTERIOR	6506.xxx.KNOS (KNIS)	Cut for Knob (KN), Passage/Dummy	Each		$228	$269
INTERIOR	6506.xxx.KTOS (KTIS)	Interior Escutcheon w/ Turn Knob (KT)	Each		$228	$269
INTERIOR	6506.xxx.KP	Escutcheons Cut for Privacy (KP)	Pair		$456	$538

†.ENFD only available in 050 & 112, to ensure a finish match on all components.

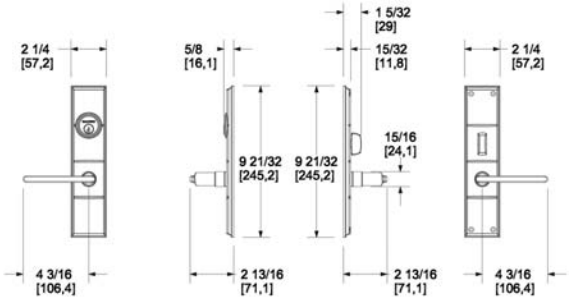

*UNIT OF MEASURE: inches [mm]

Trim thickness: .435″ – H

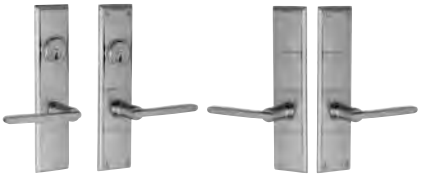

Sets	6973.xxx.ENTR	6973.xxx.DBLC	6973.xxx.FD
Exterior Trim	6506.xxx.KCOS	6506.xxx.KCOS	6506.xxx.KNOS
Interior Escutcheon	6506.xxx.KTIS	6506.xxx.KCIS	6506.xxx.KNIS
Knob/Lever	5164.xxx.MR (Pair)	5164.xxx.MR (Pair)	5164.xxx.MR (Pair)
Spindle	0522 (4″ Swivel)	0522 (4″ Swivel)	0511 (4″ Swivel)
Cylinder	8324 (1.75″ Door)	• (Double)	5099.004 (x2)
Mortise Lock	• (Lever Strength)	• (Lever Strength)	
Blocking Ring		•	

Designer	Entrance	Privacy	Passage
Exterior Trim	6506.xxx.KCOS	6506.xxx.KEOS	6506.xxx.KNOS
Interior Escutcheon	6506.xxx.KTIS	6506.xxx.KTIS	6506.xxx.KNIS
REQUIRED — Knob/Lever	Pair	Pair	Pair
REQUIRED — Spindle	•	•	•
REQUIRED — Cylinder	•		
REQUIRED — Mortise Lock	•	• (Latch & Bolt, Lock, or Latch)	• (Latch or Interior Lock)
REQUIRED — Blocking Ring			
REQUIRED — Turn Knob			

SEE BACK COVER FLAP for easy-ordering charts and requirements for doors thicker than 1.75″

MUST ORDER SEPERATELY
shown in grey

**(All .KE hardware include 6701 ER cover)

KENSINGTON

	Item #	Description		Wt.	003, 031, 033 050, 060, 102 112, 150, 151 190, 260, 264	044, 055, 056, 402, 452
SET	6526.xxx.RENT (LENT)	Entrance Trim	Set		$753	$842
SET	6526.xxx.RDBL (LDBL)	Double Cylinder	Set		$753	$842
SET	6526.xxx.RFD (LFD)	Full Dummy	Set		$753	$842
SET	6526.xxx.ENFD†	1 Active Entrance Set + 1 Full Dummy Set	2 Sets		$1157	—
EXT	6643.xxx	Active Exterior Trim	Each		$427	$479
EXT	6643.xxx.DM	Dummy Exterior Trim	Each		$427	$479
INTERIOR		Interior Escutcheon –				
INTERIOR	6525.xxx.KC	Cut for Cylinder (KC), Double Cylinder	Each		$228	$269
INTERIOR	6525.xxx.KE**	Cut for Emergency Release (KE)	Each		$228	$269
INTERIOR	6525.xxx.KN	Cut for Knob (KN), Passage/Dummy	Each		$228	$269
INTERIOR	6525.xxx.KT	Interior Escutcheon w/ Turn Knob (KT)	Each		$269	$315

†.ENFD only available in 050 & 112, to ensure a finish match on all components.

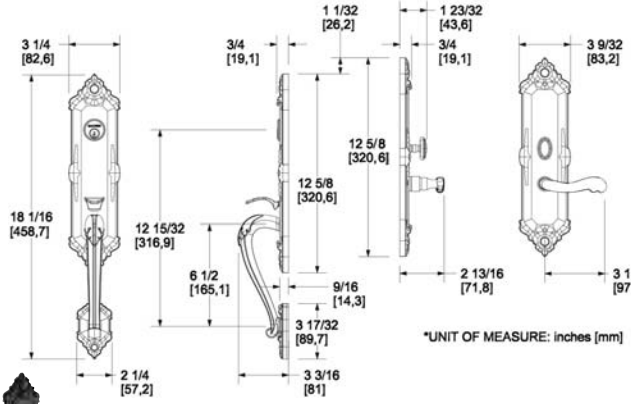

Trim thickness: .56″ – I

Sets	6526.xxx.RENT (LENT)	6526.xxx.RDBL (LDBL)	6526.xxx.RFD (LFD)
Exterior Trim	6643.xxx	6643.xxx	6643.xxx.DM
Interior Escutcheon	6525.xxx.KT	6525.xxx.KC	6525.xxx.KT
Knob/Lever	5108.xxx.LMR (RMR)	5108.xxx.LMR (RMR)	5108.xxx.LMR (RMR)
Spindle	0530 (2.375″ Half)	0533.004 (2.25″ Half)	5092 (1.125″ Dummy)
Cylinder	8325 for 1.75″ door	Double	6761 (Dummy)
Mortise Lock	• (Lever Strength)	• (Lever Strength)	
Blocking Ring		•	

Designer	Entrance	Entrance	Double Cylinder	Privacy	Passage
Exterior Trim	6643.xxx	6525.xxx.KC	6525.xxx.KC	6525.xxx.KE**	
Interior Escutcheon	6525.xxx.KT	6525.xxx.KT	6525.xxx.KC	6525.xxx.KT	6525.xxx.KN (x2)
Knob/Lever	Half Pair	Pair	Pair	Pair	Pair
Spindle	•	•	•	•	•
Cylinder	•	•	• (Double)		
Mortise Lock	• (Lever Strength)	• (Lever Strength)	• (Lever Strength)	Mortise Bolt or Mortise Lock	Latch or Interior Mortise Lock
Blocking Ring			•		
Turn Knob					

REQUIRED —

SEE BACK COVER FLAP for easy-ordering charts and requirements for doors thicker than 1.75″

**(All .KE hardware include 6701 ER cover)

MUST ORDER SEPERATELY
shown in grey

KENSINGTON

	Item #	Description		Wt.	003, 031, 033 050, 060, 102 112, 150, 151 190, 260, 264	044, 055, 056, 402, 452
SET	6950.xxx.RENT (LENT)	Entrance Trim – **Kensington**	Set	9.5	$930	$1,017
SET	6950.xxx.RDBL (LDBL)	Double Cylinder	Set		$930	$1,017
SET	6950.xxx.RFD (LFD)	Full Dummy	Set		$930	$1,017
SET	6950.xxx.ENFD†	1 Active Entrance Set + 1 Full Dummy Set	2 Sets		$1,858†	—
SET	6624.xxx.BB75	Entrance Back-to-Back – 1.75″ door	Set		$1,279	$1,368
SET	6624.xxx.BB30	Entrance Back-to-Back – up to 3″ door	Set		$1,279	$1,368
SET	6624.xxx.BBFD	Dummy Back-to-Back	Set		$1,279	$1,368
EXT	6624.xxx	Active Exterior Trim only	Each		$689	$743
EXT	6624.xxx.DM	Dummy Exterior only	Each		$689	$743
EXT	6961.xxx.DM	Dummy Exterior only	Each		$251	$292
INTERIOR		Interior Escutcheon –				
INTERIOR	6790.xxx.KC	Cut for Cylinder (KC), Double Cylinder	Each		$228	$269
INTERIOR	6790.xxx.KE**	Cut for Emergency Release (KE)	Each		$228	$269
INTERIOR	6790.xxx.KN	Cut for Knob (KN), Passage/Dummy	Each		$228	$269
INTERIOR	6790.xxx.KT	Interior Escutcheon w/ Turn Knob (KT)	Each		$269	$315
INTERIOR	6790.xxx.KP	Escutcheons Cut for Privacy (KP)	Pair		$456	$538

†.ENFD only available in 050 & 112, to ensure a finish match on all components.

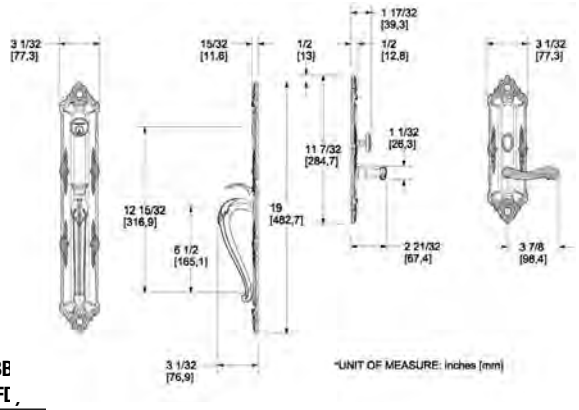

Trim width: 2.75″
Trim thickness: .3125″ – F

Kensington **Sets**	6950.xxx.RENT (LENT)	6950.xxx.RDBL (LDBL)	6950.xxx.RFD (LFD)	6624.xxx.BB (BB30, BBFD)
Exterior Trim	6624.xxx	6624.xxx	6624.xxx.DM	6624.xxx (x2)
Interior Escutcheon	6790.xxx.KT	6790.xxx.KC	6790.xxx.KN	
Knob/Lever	5108.xxx.LMR (RMR)	5108.xxx.LMR (RMR)	5108.xxx.LMR (RMR)	
Spindle	0530 (2.375″ Half)	0530 (2.375″ Half)	5092 (1.125″ Dummy)	
Cylinder	8323 (1.75″ Door)	• (Double)	6761 (Dummy)	• (Double)
Mortise Lock	• (Lever Strength)	• (Lever Strength)		•
Blocking Ring		•		•

In an effort to simplify the mortise trim offering, some escutcheon trim sets will no longer be available pre-configured. However, these configurations are still available a la carte. See breakouts below by function.

Formerly the Westminster Configuration **Sets**	Entry	Double Cylinder	Full Dummy
Exterior Trim	6790.xxx.KC	6790.xxx.KC	
Interior Escutcheon	6790.xxx.KT	6790.xxx.KC	6790.xxx.KN (x2)
Knob/Lever	5108.xxx.MR (Pair)	5108.xxx.MR (Pair)	5108.xxx.MR (Pair)
Spindle	0522 (4″ Swivel)	0522 (4″ Swivel)	0511.004 (4″ Straight)
Cylinder	•	• (Double)	5099.004 (x2)
Mortise Lock	• (Lever Strength)	• (Lever Strength)	
Blocking Ring		•	

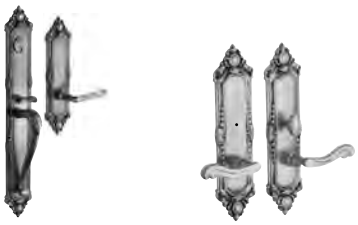

Designer	Kensington Entrance	6970 Entrance
Exterior Trim	6624.xxx	6790.xxx.KE**
Interior Escutcheon	6790.xxx.KT	6790.xxx.KT or .KP
Knob/Lever	Half Pair	Pair
Spindle	•	•
Cylinder	•	•
Mortise Lock	• (Lever Strength)	• Latch & Bolt, Lock or Latch)
Blocking Ring		
Turn Knob		

REQUIRED —

SEE BACK COVER FLAP for easy-ordering charts and requirements for doors thicker than 1.75″

MUST ORDER SEPERATELY
shown in grey

**(All .KE hardware include 6701 ER cover)

LAKESHORE™

	Item #	Description		Wt.	003, 031, 033 050, 060, 102 112, 150, 151 190, 260, 264	044, 055, 056, 402, 452
SET	6966.xxx.RENT (LENT)	Entrance Trim – **Lakeshore**	Set	5.0	$930	$1,017
SET	6966.xxx.RDBL (LDBL)	Double Cylinder	Set		$930	$1,017
SET	6966.xxx.RFD (LFD)	Full Dummy	Set		$930	$1,017
SET	6966.xxx.ENFD†	1 Active Entrance Set + 1 Full Dummy Set	2 Sets		$1,858†	—
SET	6553.xxx.BB75	Entrance Back-to-Back – 1.75″ door	Set		$1,279	$1,368
SET	6553.xxx.BB30	Entrance Back-to-Back – up to 3″ door	Set		$1,279	$1,368
SET	6553.xxx.BBFD	Dummy Back-to-Back	Set		$1,279	$1,368
EXT	6553.xxx	Active Exterior Trim only	Each		$689	$743
EXT	6553.xxx.DM	Dummy Exterior only	Each		$689	$743
EXT	6974.xxx.RDM (LDM)	Dummy Exterior only	Each		$251	$292
INTERIOR		Interior Escutcheon –				
INTERIOR	6502.xxx.KCOS (KCIS)	Cut for Cylinder (KC), Double Cylinder	Each		$228	$269
INTERIOR	6502.xxx.KEOS (KEIS)	Cut for Emergency Release (KE)	Each		$228	$269
INTERIOR	6502.xxx.KNOS (KNIS)	Cut for Knob (KN), Passage/Dummy	Each		$228	$269
INTERIOR	6502.xxx.KTOS (KTIS)	Interior Escutcheon w/ Turn Knob (KT)	Each		$269	$315

†.ENFD only available in 050 & 112, to ensure a finish match on all components.

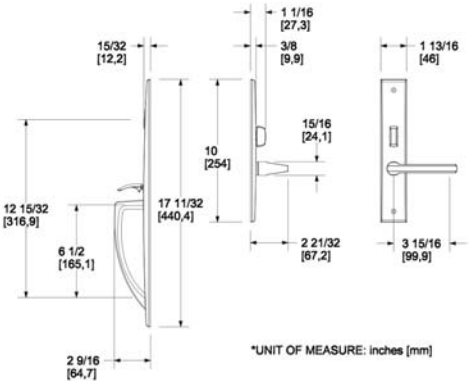

Sets	6966.xxx.RENT (LENT)	6966.xxx.RDBL (LDBL)	6966.xxx.RFD (LFD)	6553.xxx.BB75 (BB30, BBFD)
Exterior Trim	6553.xxx	6553.xxx	6553.xxx.DM	6553.xxx (x2)
Interior Escutcheon	6502.xxx.KTIS	6502.xxx.KCIS	6502.xxx.KNIS	
Knob/Lever	5162.xxx.LMR (.RMR)	5162.xxx.LMR (.RMR)	5162.xxx.LMR (.RMR)	
Spindle	0530 (2.375″ Half)	0530 (2.375″ Half)	5092 (1.5″ Dummy)	
Cylinder	8323 (1.75″ Door)	• (Double)	6761 (Dummy)	• (Double)
Mortise Lock	• (Lever Strength)	• (Lever Strength)		•
Blocking Ring		•		•

Trim thickness: .375″ – G

In an effort to simplify the mortise trim offering, some escutcheon trim sets will no longer be available pre-configured. However, these configurations are still available a la carte. See breakouts below by function.

Sets	Entry	Double Cylinder	Full Dummy
Exterior Trim	6502.xxx.KCOS	6502.xxx.KCOS	6502.xxx.KNOS
Interior Escutcheon	6502.xxx.KTIS	6502.xxx.KCIS	6502.xxx.KNIS
Knob/Lever	5162.xxx.MR (Pair)	5162.xxx.MR (Pair)	5162.xxx.MR (Pair)
Spindle	0522 (4″ Swivel)	0522 (4″ Swivel)	0511 (4″ Straight)
Cylinder	•	• (Double)	
Mortise Lock	• (Lever Strength)	• (Lever Strength)	
Blocking Ring		•	

Designer	Entrance	Privacy
Exterior Trim	6553.xxx	6502.xxx.KEOS**
Interior Escutcheon	6502.xxx.KTIS	6502.xxx.KTIS
Knob/Lever	Half Pair	Pair
Spindle	•	•
Cylinder	•	
Mortise Lock	• (Lever Strength)	• (Latch & Bolt or Lock)
Blocking Ring		
Turn Knob		

REQUIRED —

**(All .KE hardware include 6701 ER cover)

MUST ORDER SEPERATELY
shown in grey

LEXINGTON

	Item #	Description		Wt.	003, 031 050, 060, 102 112, 150, 151 190, 260, 264	044, 055, 056, 402, 452
SET	6560.xxx.ENTR	Entrance Trim – **Lexington**	Set	4.3	$579	$666
	6560.xxx.DBLC	Double Cylinder	Set		$579	$666
	6560.xxx.FD	Full Dummy	Set		$579	$666
	6560.xxx.ENFD†	1 Active Entrance Set + 1 Full Dummy Set	2 Sets		$1,157	—
	6621.xxx.BB75	Entrance Back-to-Back – 1.75″ door	Set		$1,221	$1,309
	6621.xxx.BB30	Entrance Back-to-Back – up to 3″ door	Set		$1,221	$1,309
	6621.xxx.BBFD	Dummy Back-to-Back	Set		$1,221	$1,309
EXT	6621.xxx	Active Exterior Trim only	Each		$427	$468
	6621.xxx.DM	Dummy Exterior only	Each		$427	$468
INTERIOR		Interior Escutcheon –				
	6795.xxx.KC	Cut for Cylinder (KC), Double Cylinder	Each		$228	$269
	6795.xxx.KE**	Cut for Emergency Release (KE)	Each		$228	$269
	6795.xxx.KN	Cut for Knob (KN), Passage/Dummy	Each		$228	$269
	6795.xxx.KT	Interior Escutcheon w/ Turn Knob (KT)	Each		$269	$315

†.ENFD only available in 050 & 112, to ensure a finish match on all components.

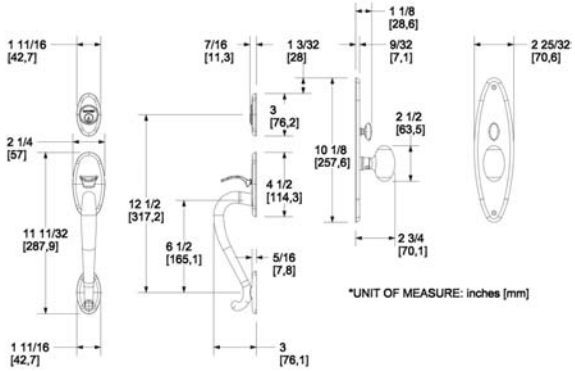

Lexington **Sets**	6560.xxx.ENTR	6560.xxx.DBLC	6560.xxx.FD	6621.xxx.BB75 (BB30, BBFD)
Exterior Trim	6621.xxx	6621.xxx	6621.xxx.DM	6621.xxx (x2)
Interior Escutcheon	6795.xxx.KT	6795.xxx.KC	6795.xxx.KN	
Knob/Lever	5025.xxx.IMR	5025.xxx.IMR	5025.xxx.IMR	
Spindle	0530 (2.375″ Half)	0530 (2.375″ Half)	5092 (1.125″ Dummy)	
Cylinder	8323 (1.75″ Door)	• (Double)	6761 (Dummy)	• (Double)
Mortise Lock	•	•		•
Blocking Ring		•		•

Trim width: 2.25″
Trim thickness: .3125″ – F

In an effort to simplify the mortise trim offering, some escutcheon trim sets will no longer be available pre-configured. However, these configurations are still available a la carte. See breakouts below by function.

Formerly the Wilmington Configuration **Sets**	Entry	Double Cylinder	Full Dummy
Exterior Trim	6795.xxx.KC	6795.xxx.KC	
Interior Escutcheon	6795.xxx.KT	6795.xxx.KC	6795.xxx.KN (x2)
Knob/Lever	5025.xxx.MR (Pair)	5025.xxx.MR (Pair)	5025.xxx.MR (Pair)
Spindle	0522 (4″ Swivel)	0522 (4″ Swivel)	0511 (4″ Straight)
REQUIRED **Cylinder**	•	• (Double)	
REQUIRED **Mortise Lock**	•	•	
REQUIRED **Blocking Ring**		•	

Designer	Lexington Entrance	6795 Privacy
Exterior Trim	6621.xxx	6795.xxx.KE**
Interior Escutcheon	6795.xxx.KT	6795.xxx.KT
REQUIRED **Knob/Lever**	Half Pair	Pair
REQUIRED **Spindle**	•	•
REQUIRED **Cylinder**	•	
REQUIRED **Mortise Lock**	• (Lever Strength)	• (Latch & Bolt or Lock)
REQUIRED **Blocking Ring**		
REQUIRED **Turn Knob**		

MUST ORDER SEPERATELY
shown in grey

**(All .KE hardware include 6701 ER cover)

MINNEAPOLIS

	Item #	Description		Wt.	003, 031, 033 050, 060, 102 112, 150, 151 190, 260, 264	044, 055, 056, 402, 452
SET	6976.xxx.RENT (LENT)	Entrance Trim	Set	5.5	$753	$842
SET	6976.xxx.RDBL (LDBL)	Double Cylinder	Set		$753	$842
SET	6976.xxx.RFD (LFD)	Full Dummy	Set		$753	$842
SET	6976.xxx.ENFD†	1 Active Entrance Set + 1 Full Dummy Set	2 Sets		$1,508	—
SET	6620.xxx.BB75	Entrance Back-to-Back – 1.75″ door	Set		$1,221	$1,309
SET	6620.xxx.BB30	Entrance Back-to-Back – up to 3″ door	Set		$1,221	$1,309
SET	6620.xxx.BBFD	Dummy Back-to-Back	Set		$1,221	$1,309
EXT	6620.xxx	Active Exterior Trim	Each		$427	$468
EXT	6620.xxx.DM	Dummy Exterior Trim	Each		$427	$468
INTERIOR	6513.xxx.KC	Interior Escutcheon – Cut for Cylinder (KC), Double Cylinder	Each		$228	$269
INTERIOR	6513.xxx.KE**	Cut for Emergency Release (KE)	Each		$228	$269
INTERIOR	6513.xxx.KN	Cut for Knob (KN), Passage/Dummy	Each		$228	$269
INTERIOR	6514.xxx.KT	Interior Escutcheon w/ Turn Knob (KT)	Each		$269	$315

†.ENFD only available in 050 & 112, to ensure a finish match on all components.

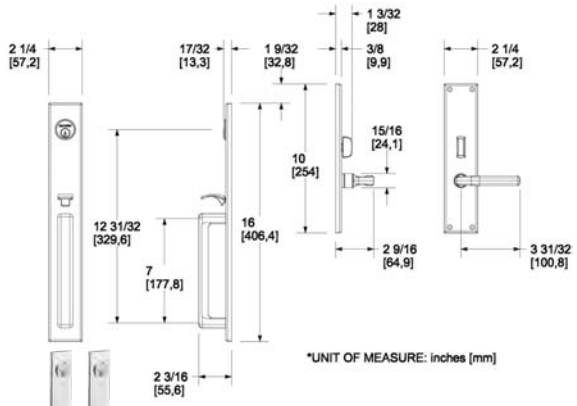

Trim width: 2.25″
Trim thickness: .375″ – G

Sets	6976.xxx.RENT (LENT)	6976.xxx.RDBL (LDBL)	6976.xxx.RFD (LFD)	6620.xxx.BB75 (BB30, BBFD)
Exterior Trim	6620.xxx	6620.xxx	6620.xxx.DM	6620.xxx (x2)
Interior Escutcheon	6514.xxx.KT	6513.xxx.KC	6513.xxx.KN	
Knob/Lever	5190.xxx.LMR (RMR)	5190.xxx.LMR (RMR)	5190.xxx.LMR (RMR)	
Spindle	0530 (2.375″ Half)	0530 (2.25″ Half)	5092 (1.5″ Dummy)	
Cylinder	8323 (1.75″ Door)	8323 (1.75″ Door)	6761 (Dummy)	• (Double)
Mortise Lock	• (Lever Strength)	•		•
Blocking Ring		•		•

Designer	Entrance	Entrance	Double Cylinder	Privacy	Passage
Exterior Trim	6620.xxx	6513.xxx.KC	6513.xxx.KC	6513.xxx.KE**	
Interior Escutcheon	6514.xxx.KT	6514.xxx.KT	6513.xxx.KC	6514.xxx.KT	6513.xxx.KN (x2)
REQUIRED — Knob/Lever	Half Pair	Pair	Pair	Pair	Pair
REQUIRED — Spindle	•	•	•	•	•
REQUIRED — Cylinder	•	•	• (Double)		
REQUIRED — Mortise Lock	•	• (Lever Strength)	• (Lever Strength)	• (Latch & Bolt or Lock)	• (Latch or Interior Lock)
REQUIRED — Blocking Ring			•		
REQUIRED — Turn Knob					

SEE BACK COVER FLAP for easy-ordering charts and requirements for doors thicker than 1.75″

**(All .KE hardware include 6701 ER cover)

MUST ORDER SEPERATELY
shown in grey

NASHVILLE

	Item #	Description		Wt.	003, 031 050, 060, 102 112, 150, 151 190, 260, 264	044, 055, 056, 402, 452
SET	6547.xxx.ENTR	Entrance Trim	Set	6.1	$579	$666
SET	6547.xxx.DBLC	Double Cylinder	Set		$579	$666
SET	6547.xxx.FD	Full Dummy	Set		$579	$666
SET	6547.xxx.ENFD†	1 Active Entrance Set + 1 Full Dummy Set	2 Sets		$1,157†	—
EXT	6547.xxx.DM	Dummy Exterior only	Each		$251	$292
INTERIOR		Interior Escutcheon –				
INTERIOR	6793.xxx.KC	Cut for Cylinder (KC), Double Cylinder	Each		$228	$269
INTERIOR	6793.xxx.KE**	Cut for Emergency Release (KE)	Each		$228	$269
INTERIOR	6793.xxx.KN	Cut for Knob (KN), Passage/Dummy	Each		$228	$269
INTERIOR	6793.xxx.KT	Interior Escutcheon w/ Turn Knob (KT)	Each		$269	$315
INTERIOR	6793.xxx.KP	Escutcheons Cut for Privacy (KP)	Pair		$456	$538

†.ENFD only available in 050 & 112, to ensure a finish match on all components.

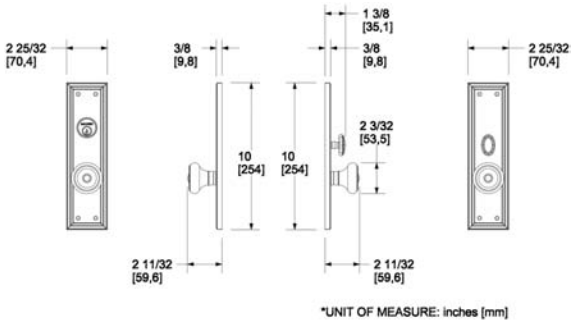

Trim thickness: .25″ – C

Sets	6547.xxx.ENTR	6547.xxx.DBLC	6547.xxx.FD
Exterior Trim	6793.xxx.KC	6793.xxx.KC	
Interior Escutcheon	6793.xxx.KT	6793.xxx.KC	6793.xxx.KN (x2)
Knob/Lever	5020.xxx.MR (Pair)	5020.xxx.MR (Pair)	5020.xxx.MR (Pair)
Spindle	0522 (4″ Swivel)	0522 (4″ Swivel)	0511 (4″ Straight)
Cylinder	8322 (1.75″ Door)	8321 (1.75″ Door)	5099.004 (x2)
Mortise Lock	•	•	
Blocking Ring		•	

	Designer	Entrance	Privacy	Passage
	Exterior Trim	6793.xxx.KC	6793.xxx.KE**	
	Interior Escutcheon	6793.xxx.KT	6793.xxx.KT or .KP	6793.xxx.KN (x2)
REQUIRED —	Knob/Lever	Pair	Pair	Pair
REQUIRED —	Spindle	•	•	•
REQUIRED —	Cylinder	•		
REQUIRED —	Mortise Lock	•	• (Latch & Mortise Bolt or Mortise Lock)	• (Latch or Interior Mortise Lock)
REQUIRED —	Blocking Ring			
REQUIRED —	Turn Knob			

SEE BACK COVER FLAP for easy-ordering charts and requirements for doors thicker than 1.75″

MUST ORDER SEPERATELY
shown in grey

**(All .KE hardware include 6701 ER cover)

PALM SPRINGS™ ¾ ESCUTCHEON

	Item #	Description		Wt.	003, 031, 033 050, 060, 102 112, 150, 151 190, 260, 264	044, 055, 056, 402, 452
SET	6920.xxx.RENT (LENT)	Entrance Trim	Set	9.5	$579	$666
SET	6920xxx.RDBL (LDBL)	Double Cylinder	Set		$579	$666
SET	6920.xxx.RFD (LFD)	Full Dummy	Set		$579	$666
SET	6920.xxx.ENFD†	1 Active Entrance Set + 1 Full Dummy Set	2 Sets		$1,157	--
EXT	6615.xxx	Active Exterior Trim	Each		$251	$292
EXT	6615.xxx.DM	Dummy Exterior Trim	Each		$251	$292
INTERIOR		Interior Escutcheon –				
INTERIOR	6715.xxx.KC	Cut for Cylinder (KC), Double Cylinder	Each		$228	$269
INTERIOR	6715.xxx.KE**	Cut for Emergency Release (KE)	Each		$228	$269
INTERIOR	6715.xxx.KN	Cut for Knob (KN), Passage/Dummy	Each		$228	$269
INTERIOR	6715.xxx.KT	Interior Escutcheon w/ Turn Knob (KT)	Each		$269	$315

†.ENFD only available in 050 & 112, to ensure a finish match on all components.

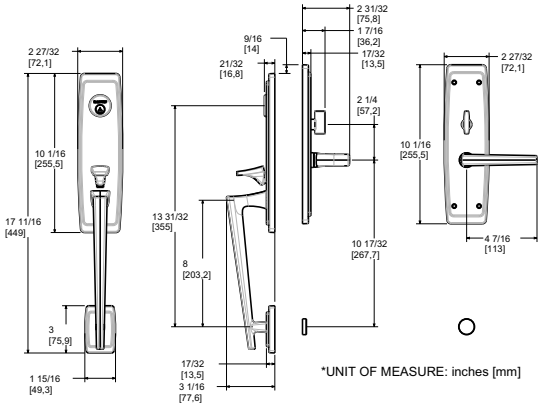

Trim width: 2.84″
Trim thickness: .53″ – H1

Sets	6920.xxx.RENT (LENT)	6920.xxx.RDBL (LDBL)	6920.xxx.RFD (LFD)
Exterior Trim	6615.xxx	6615.xxx	6615.xxx.DM
Interior Escutcheon	6715.xxx.KT	6715.xxx.KC	6715.xxx.KN
Knob/Lever	L024.xxx.LMR (RMR)	L024.xxx.LMR (RMR)	L024.xxx.LMR (RMR)
Spindle	0530 (2.375″ Half)	0530 (2.375″ Half)	5077 (1.125″ Dummy)
Cylinder	8325 (1.75″ Door)	• (Double)	6761 (Dummy)
Mortise Lock	•	•	
Blocking Ring		•	

Designer	Entrance	Entrance	Double Cylinder	Privacy	Passage
Exterior Trim	6615.xxx	6715.xxx.KC	6715.xxx.KC	6715.xxx.KE**	
Interior Escutcheon	6715.xxx.KT	6715.xxx.KT	6715.xxx.KC	6715.xxx.KT	6715.xxx.KN (x2)
Knob/Lever	Half Pair	Pair	Pair	Pair	Pair
Spindle	•	•	•	•	•
Cylinder	•	•	• (Double)		
Mortise Lock	• (Lever Strength)	•	•	• (Latch & Bolt or Lock)	• (Latch or Interior Lock)
Blocking Ring			•	Other- ER Trim	
Turn Knob					

REQUIRED

SEE BACK COVER FLAP for easy-ordering charts and requirements for doors thicker than 1.75″

MUST ORDER SEPERATELY
shown in grey

**(All .KE hardware include 6701 ER cover)

ENTRANCE TRIM, MORTISE

PALM SPRINGS™ FULL ESCUTCHEON

	Item #	Description		Wt.	003, 031, 033 050, 060, 102 112, 150, 151 190, 260, 264	044, 055, 056, 402, 452
SET	6921.xxx.RENT (LENT)	Entrance Trim	Set	9.5	$753	$842
SET	6921xxx.RDBL (LDBL)	Double Cylinder	Set		$753	$842
SET	6921.xxx.RFD (LFD)	Full Dummy	Set		$753	$842
SET	6921.xxx.ENFD†	1 Active Entrance Set + 1 Full Dummy Set	2 Sets		$1,508	--
EXT	6616.xxx	Active Exterior Trim	Each		$427	$468
EXT	6616.xxx.DM	Dummy Exterior Trim	Each		$427	$468
INTERIOR		Interior Escutcheon –				
INTERIOR	6715.xxx.KC	Cut for Cylinder (KC), Double Cylinder	Each		$228	$269
INTERIOR	6715.xxx.KE**	Cut for Emergency Release (KE)	Each		$228	$269
INTERIOR	6715.xxx.KN	Cut for Knob (KN), Passage/Dummy	Each		$228	$269
INTERIOR	6715.xxx.KT	Interior Escutcheon w/ Turn Knob (KT)	Each		$269	$315

†.ENFD only available in 050 & 112, to ensure a finish match on all components.

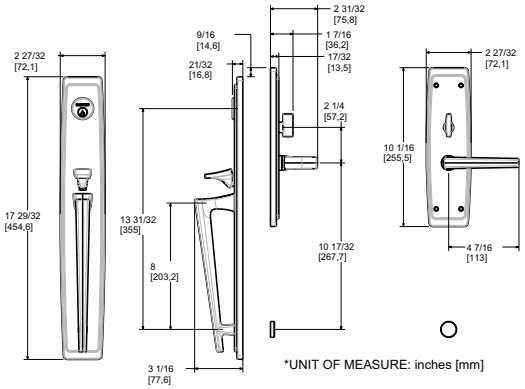

Sets	6921.xxx.RENT (LENT)	6921.xxx.RDBL (LDBL)	6921.xxx.RFD (LFD)
Exterior Trim	6616.xxx	6616.xxx	6616.xxx.DM
Interior Escutcheon	6715.xxx.KT	6715.xxx.KC	6715.xxx.KN
Knob/Lever	L024.xxx.LMR (RMR)	L024.xxx.LMR (RMR)	L024.xxx.LMR (RMR)
Spindle	0530 (2.375″ Half)	0530 (2.375″ Half)	5077 (1.125″ Dummy)
Cylinder	8325 (1.75″ Door)	• (Double)	6761 (Dummy)
Mortise Lock	•	•	
Blocking Ring		•	

Trim width: 2.84″
Trim thickness: .53″ – H1

	Designer	Entrance	Entrance	Double Cylinder	Privacy	Passage
	Exterior Trim	6616.xxx	6715.xxx.KC	6715.xxx.KC	6715.xxx.KE	
	Interior Escutcheon	6715.xxx.KT	6715.xxx.KT	6715.xxx.KC	6715.xxx.KT	6715.xxx.KN (x2)
REQUIRED —	Knob/Lever	Half Pair	Pair	Pair	Pair	Pair
REQUIRED —	Spindle	•	•	•	•	•
REQUIRED —	Cylinder	•	•	• (Double)		
REQUIRED —	Mortise Lock	• (Lever Strength)	•	•	• (Latch & Bolt or Lock)	• (Latch or Interior Lock)
REQUIRED —	Blocking Ring			•	Other- ER Trim	
REQUIRED —	Turn Knob					

SEE BACK COVER FLAP for easy-ordering charts and requirements for doors thicker than 1.75″

MUST ORDER SEPERATELY
shown in grey

**(All .KE hardware include 6701 ER cover)

BALDWIN®

PASADENA

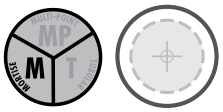

	Item #	Description		Wt.	003, 031, 033 050, 060, 102 112, 150, 151 190, 260, 264	044, 402, 452
SET	6944.xxx.RENT (LENT)	Entrance Trim	Set	9.5	$930	$1,017
	6944.xxx.RDBL (LDBL)	Double Cylinder	Set		$930	$1,017
	6944.xxx.RFD (LFD)	Full Dummy	Set		$930	$1,017
	6944.xxx.ENFD†	1 Active Entrance Set + 1 Full Dummy Set	2 Sets		$1,858†	—
	6641.xxx.BB75	Entrance Back-to-Back – 1.75″ door	Set		$1,279	$1,368
	6641.xxx.BB30	Entrance Back-to-Back – 3″ door	Set		$1,279	$1,368
	6641.xxx.BBFD	Dummy Back-to-Back	Set		$1,279	$1,368
EXT	6641.xxx	Active Exterior Trim	Each		$689	$743
	6641.xxx.DM	Dummy Exterior Trim	Each		$689	$743
INTERIOR		Interior Escutcheon –				
	6714.xxx.KC	Cut for Cylinder (KC), Double Cylinder	Each		$228	$269
	6714.xxx.KE**	Cut for Emergency Release (KE)	Each		$228	$269
	6714.xxx.KN	Cut for Knob (KN), Passage/Dummy	Each		$228	$269
	6714.xxx.KT	Interior Escutcheon w/ Turn Knob (KT)	Each		$269	$315

†.ENFD only available in 050 & 112, to ensure a finish match on all components.

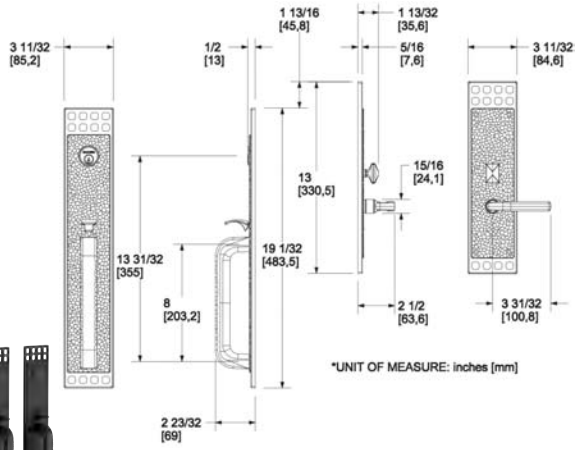

Sets	6944.xxx.RENT (LENT)	6944.xxx.RDBL (LDBL)	6944.xxx.RFD (LFD)	6641.xxx.BB75 (BBFD)
Exterior Trim	6641.xxx	6641.xxx	6641.xxx.DM	6641.xxx (x2)
Interior Escutcheon	6714.xxx.KT	6714.xxx.KC	6714.xxx.KN	
Knob/Lever	5190.xxx.LMR (RMR)	5190.xxx.LMR (RMR)	5190.xxx.LMR (RMR)	
Spindle	0530 (2.375″ Half)	0530 (2.375″ Half)	5092 (1.125″ Dummy)	
Cylinder	8323 (1.75″ Door)	• (Double)	6761 (Dummy)	• (Double)
Mortise Lock	•	•		•
Blocking Ring		•		•

Trim width: 3.35″
Trim thickness: .375″ – G

Designer	Entrance	Entrance	Double Cylinder	Privacy	Passage
Exterior Trim	6641.xxx	6714.xxx.KC	6714.xxx.KC	6714.xxx.KE**	
Interior Escutcheon	6714.xxx.KT	6714.xxx.KT	6714.xxx.KC	6714.xxx.KT	6714.xxx.KN (x2)
REQUIRED — Knob/Lever	Half Pair	Pair	Pair	Pair	Pair
Spindle	•	•	•	•	•
Cylinder	•	•	• (Double)		
Mortise Lock	• (Lever Strength)	•	•	• (Latch & Bolt or Lock)	• (Latch or Interior Lock)
Blocking Ring			•	Other- ER Trim	
Turn Knob					

SEE BACK COVER FLAP for easy-ordering charts and requirements for doors thicker than 1.75″

MUST ORDER SEPERATELY
shown in grey

**(All .KE hardware include 6701 ER cover)

RICHLAND®

	Item #	Description		Wt.	003, 031, 033 050, 060, 102 112, 150, 151 190, 260, 264	044, 055, 056, 402, 452
SET	6999.xxx.RENT (LENT)	Entrance Trim	Set	9.5	$930	$1,017
SET	6999.xxx.RDBL (LDBL)	Double Cylinder	Set		$930	$1,017
SET	6999.xxx.RFD (LFD)	Full Dummy	Set		$930	$1,017
SET	6999.xxx.ENFD†	1 Active Entrance Set + 1 Full Dummy Set	2 Sets		$1,858†	—
SET	6690.xxx.BB75	Entrance Back-to-Back – 1.75″ door	Set		$1,279	$1,368
SET	6690.xxx.BBFD	Entrance Back-to-Back	Set		$1,279	$1,368
EXT	6690.xxx	Active Exterior Trim	Each		$689	$743
EXT	6690.xxx.DM	Dummy Exterior Trim	Each		$689	$743
INTERIOR		Interior Escutcheon –				
INTERIOR	6709.xxx.KC	Cut for Cylinder (KC), Double Cylinder	Each		$228	$269
INTERIOR	6709.xxx.KE**	Cut for Emergency Release (KE)	Each		$228	$269
INTERIOR	6709.xxx.KN	Cut for Knob (KN), Passage/Dummy	Each		$228	$269
INTERIOR	6709.xxx.KT	Interior Escutcheon w/ Turn Knob (KT)	Each		$269	$315

†.ENFD only available in 050 & 112, to ensure a finish match on all components.

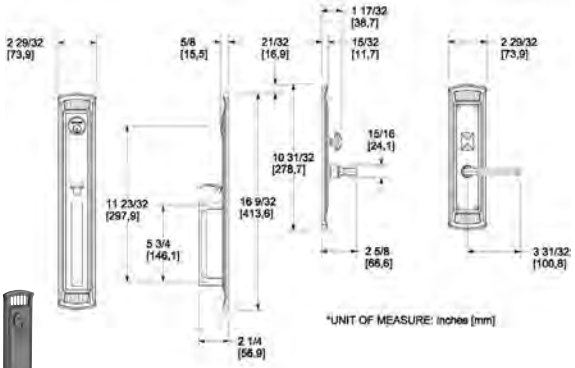

Trim width: 2.9″
Trim thickness: .435″ – H

Sets	6999.xxx.RENT (LENT)	6999.xxx.RDBL (LDBL)	6999.xxx.RFD (LFD)	6690.xxx.BB75 (BBFD)
Exterior Trim	6690.xxx	6690.xxx	6690.xxx.DM	6690.xxx (x2)
Interior Escutcheon	6709.xxx.KT	6709.xxx.KC	6709.xxx.KN	
Knob/Lever	5190.xxx.LMR (RMR)	5190.xxx.LMR (RMR)	5190.xxx.LMR (RMR)	
Spindle	0530 (2.375″ Half)	0530 (2.375″ Half)	5092 (1.125″ Dummy)	5092 (1.125″ Dummy)
Cylinder	8324 (1.75″ Door)	• (Double)	6761 (Dummy)	• (Double)
Mortise Lock	• (Lever Strength)	• (Lever Strength)		•
Blocking Ring		•		•

Designer	Entrance	Entrance	Double Cylinder	Privacy	Passage
Exterior Trim	6690.xxx	6709.xxx.KC	6709.xxx.KC	6709.xxx.KE**	
Interior Escutcheon	6709.xxx.KT	6709.xxx.KT	6709.xxx.KC	6709.xxx.KT	6709.xxx.KN (x2)
REQUIRED — Knob/Lever	Half Pair	Pair	Pair	Pair	Pair
REQUIRED — Spindle	•	•	•	•	•
REQUIRED — Cylinder	•	•	• (Double)		
REQUIRED — Mortise Lock	•	• (Lever Strength)	• (Lever Strength)	• (Latch & Bolt or Lock)	• (Latch & Interior Lock)
REQUIRED — Blocking Ring			•		
REQUIRED — Turn Knob					

SEE BACK COVER FLAP for easy-ordering charts and requirements for doors thicker than 1.75″

MUST ORDER SEPERATELY
shown in grey

**(All .KE hardware include 6701 ER cover)

BALDWIN®

SANTA MONICA

	Item #	Description		Wt.	003, 031, 033 050, 060, 102 112, 150, 151 190, 260, 264	044, 055, 056, 402, 452
SET	6915.xxx.ENTR	Entrance Trim	Set	9.5	$579	$666
	6915.xxx.DBLC	Double Cylinder	Set		$579	$666
	6915v.xxx.FD	Full Dummy	Set		$579	$666
	6915.xxx.ENFD†	1 Active Entrance Set + 1 Full Dummy Set	2 Sets		$1,157†	
EXT	6915.xxx.LDM	Dummy Exterior Trim	Each		$251	$292
	6915.xxx.RDM	Dummy Exterior Trim	Each		$251	$292
	6530.xxx.KCOS	Exterior Trim Plate KC	Each		$228	$269
	6530.xxx.KEOS	Exterior Trim Plate KE	Each		$228	$269
	6530.xxx.KNOS	Exterior Trim Plate KN	Each		$228	$269
INTERIOR	6530.xxx.KCIS	Interior Trim Plate KC	Each		$228	$269
	6530.xxx.KEIS	Interior Trim Plate KE	Each		$228	$269
	6530.xxx.KNIS	Interior Trim Plate KN	Each		$228	$269
	6530.xxx.KTIS	Interior Trim Plate KT	Each		$269	$315

†.ENFD only available in 050 & 112, to ensure a finish match on all components.

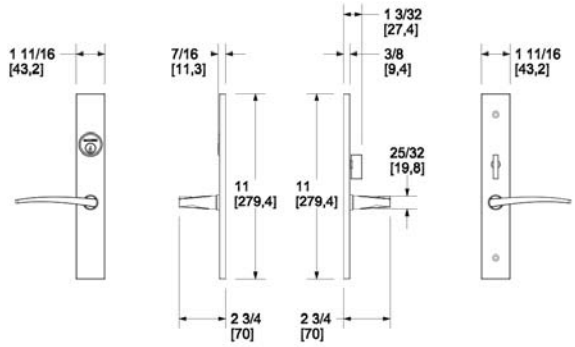

Trim width: 1.7″
Trim thickness: .37″ – G

Sets	6915.xxx.ENTR	6915.xxx.DBLC	6915.xxx.FD
Exterior Trim	6530.xxx.KCOS	6530.xxx.KCOS	6530.xxx.KNOS
Interior Escutcheon	6530.xxx.KTIS	6530.xxx.KCIS	6530.xxx.KNIS
Knob/Lever	L022.xxx.MR	L022.xxx.MR	L022.xxx.MR
Spindle	0521 (4.5" Swivel)	0521 (4.5" Swivel)	0512 & 5022 (x2)
Cylinder	8323 (1.75″ Door)	• (Double)	
Mortise Lock	•	•	
Blocking Ring		•	

Designer	Entrance	Privacy	Passage
Exterior Trim	6530.xxx.KCOS	6530.xxx.KEOS**	6530.xxx.KNOS
Interior Escutcheon	6530.xxx.KTIS	6530.xxx.KTIS	6530.xxx.KNIS
REQUIRED — Knob/Lever	Pair	Pair	Pair
Spindle	•	•	•
Cylinder	•		
Mortise Lock	• (Latch & Bolt or Lock)	• (Latch & Bolt or Lock)	• (Latch or Interior Lock)
Blocking Ring			
Turn Knob			

SEE BACK COVER FLAP for easy-ordering charts and requirements for doors thicker than 1.75″

MUST ORDER SEPERATELY
shown in grey

****(All .KE hardware include 6701 ER cover)**

SOHO ¾ ESCUTCHEON

	Item #	Description		Wt.	003, 031, 033 050, 060, 102 112, 150, 151 190, 260, 264	044, 055, 056 402, 452
SET	M516.xxx.RENT (LENT)	Entrance Trim – Lever	Set	9.5	$579	$666
SET	M516.xxx.RFD (LFD)	Full Dummy – Lever	Set		$579	$666
EXT	M516.xxx	Active Exterior Trim	Each		$251	$292
EXT	M516.xxx.DM	Dummy Exterior Trim	Each		$251	$292
INTERIOR		Interior Escutcheon –				
INTERIOR	M516.xxx.KC	Cut for Cylinder (KC), Double Cylinder	Each		$228	$269
INTERIOR	M516.xxx.KE**	Cut for Emergency Release (KE)	Each		$228	$269
INTERIOR	M516.xxx.KN	Cut for Knob (KN), Passage/Dummy	Each		$228	$269
INTERIOR	M516.xxx.KT	Interior Escutcheon w/ Turn Knob (KT)	Each		$269	$315

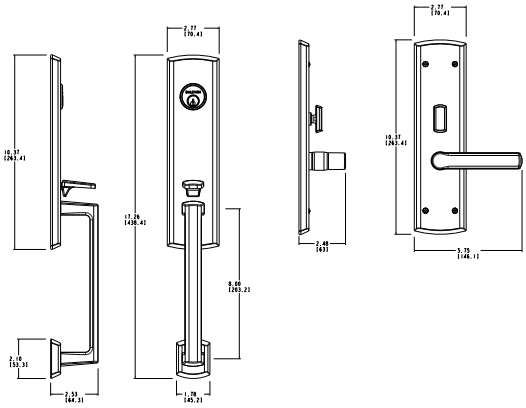

Lever Sets	M516.xxx.RENT (LENT)	M516.xxx.RFD (LFD)
Exterior Trim	M516.xxx	M516.xxx.DM
Interior Escutcheon	M516.xxx.KT	M516.xxx.KN
Knob/Lever	5485V.xxx.LMR (RMR)	5485V.xxx.LMR (RMR)
Spindle	0530 (2.375″ Half)	5092 (1.5″ Dummy)
Cylinder	8325 (1.75″ Door)	6761 (Dummy)
Mortise Lock	•	
Blocking Ring		

Trim width: 2.77″
Trim thickness: .53″ – H1

MORTISE LOCKS

SEE BACK COVER FLAP for easy-ordering charts and requirements for doors thicker than 1.75″

SPRINGFIELD

	Item #	Description		Wt.	003, 031 050, 060, 102 112, 150, 151 190, 260, 264	044, 055, 056, 402, 452
SET	6573.xxx.ENTR	Entrance Trim	Set	9.5	$579	$666
SET	6573.xxx.DBLC	Double Cylinder	Set		$579	$666
SET	6573.xxx.FD	Full Dummy	Set		$579	$666
SET	6573.xxx.ENFD†	1 Active Entrance Set + 1 Full Dummy Set	2 Sets		$1,157†	—
SET	6628.xxx.BB75	Entrance Back-to-Back – 1.75″ door	Set		$1,221	$1,309
SET	6628.xxx.BB30	Entrance Back-to-Back – up to 3″ door	Set		$1,221	$1,309
SET	6628.xxx.BBFD	Dummy Back-to-Back	Set		$1,221	$1,309
EXT	6628.xxx	Active Exterior Trim only	Each		$427	$468
EXT	6628.xxx.DM	Dummy Exterior only	Each		$427	$468
INTERIOR		Interior Escutcheon –				
INTERIOR	6798.xxx.KC	Cut for Cylinder (KC), Double Cylinder	Each		$228	$269
INTERIOR	6798.xxx.KE**	Cut for Emergency Release (KE)	Each		$228	$269
INTERIOR	6798.xxx.KN	Cut for Knob (KN), Passage/Dummy	Each		$228	$269
INTERIOR	6798.xxx.KT	Interior Escutcheon w/ Turn Knob (KT)	Each		$269	$315
INTERIOR	6798.xxx.KP	Escutcheons Cut for Privacy (KP)	Pair		$456	$538

†.ENFD only available in 050 & 112, to ensure a finish match on all components.
**All .KE hardware include 6701 ER cover

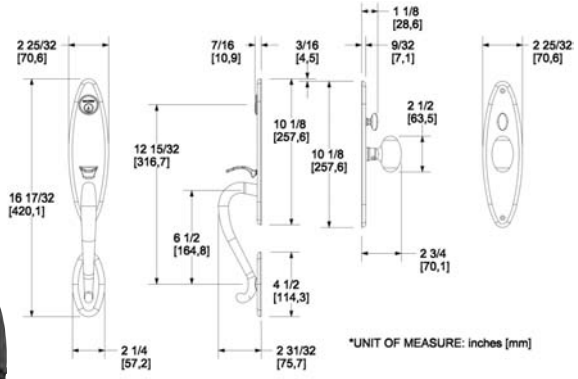

Sets	6573.xxx.ENTR	6573.xxx.DBLC	6573.xxx.FD	6628.xxx.BB75 (BB30, BBFD)
Exterior Trim	6628.xxx	6628.xxx	6628.xxx.DM	6628.xxx (x2)
Interior Escutcheon	6798.xxx.KT	6798.xxx.KC	6798.xxx.KN	
Knob/Lever	5025.xxx.IMR	5025.xxx.IMR	5025.xxx.IMR	
Spindle	0530 (2.375″ Half)	0530 (2.375″ Half)	5092 (1.125″ Dummy)	
Cylinder	8323 (1.75″ Door)	• (Double)	6761 (Dummy)	• (Double)
Mortise Lock	•	•		•
Blocking Ring		•		•

Trim width: 2.25″
Trim thickness: .3125″ – F

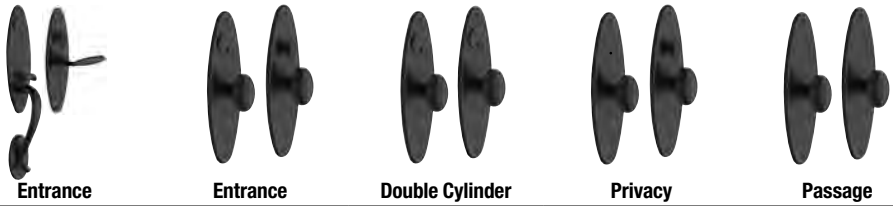

Designer	Entrance	Entrance	Double Cylinder	Privacy	Passage
Exterior Trim	6628.xxx	6798.xxx.KC	6798.xxx.KC	6798.xxx.KE**	
Interior Escutcheon	6798.xxx.KT	6798.xxx.KT	6798.xxx.KC	6798.xxx.KT or .KP	6798.xxx.KN (x2)
REQUIRED — Knob/Lever	Half Pair	Pair	Pair	Pair	Pair
REQUIRED — Spindle	•	•	•	•	•
REQUIRED — Cylinder	•	•	• (Double)		
REQUIRED — Mortise Lock	• (Lever Strength)	•	•	• (Latch & Bolt, Lock, Latch)	• (Latch or Interior Lock)
REQUIRED — Blocking Ring			•		
REQUIRED — Turn Knob					

SEE BACK COVER FLAP for easy-ordering charts and requirements for doors thicker than 1.75″

*QUICK SHIP is available in limited functions and finishes.
For complete listing, please refer to page 272.

**(All .KE hardware include 6701 ER cover)

MUST ORDER SEPERATELY
shown in grey

TREMONT

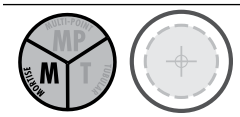

	Item #	Description		Wt.	003, 031, 033 050, 060, 102 112, 150, 151 190, 260, 264	044, 055, 056, 402, 452
SET	6542.xxx.ENTR	Entrance Trim	Set	9.5	$930	$1,017
	6542.xxx.DBLC	Double Cylinder	Set		$930	$1,017
	6542.xxx.FD	Full Dummy	Set		$930	$1,017
	6542.xxx.ENFD†	1 Active Entrance Set + 1 Full Dummy Set	2 Sets		$1,858†	—
EXT	6605.xxx.BB75	Entrance Back-to-Back	Set		$1,279	$1,368
	6605.xxx.BB30	Entrance Back-to-Back	Set		$1,279	$1,368
	6605.xxx.BBFD	Dummy Back-to-Back	Set		$1,279	$1,368
	6605.xxx	Active Exterior Trim	Each		$689	$743
	6605.xxx.DM	Dummy Exterior Trim	Each		$689	$743
INTERIOR		Interior Escutcheon –				
	6796.xxx.KC	Cut for Cylinder (KC), Double Cylinder	Each		$228	$269
	6796.xxx.KE**	Cut for Emergency Release (KE**)	Each		$228	$269
	6796.xxx.KN	Cut for Knob (KN), Passage/Dummy	Each		$228	$269
	6796.xxx.KT	Interior Escutcheon w/ Turn Knob (KT)	Each		$269	$315
	6796.xxx.KP	Escutcheons Cut for Privacy (KP)	Pair		$456	$538

†.ENFD only available in 050 & 112, to ensure a finish match on all components.

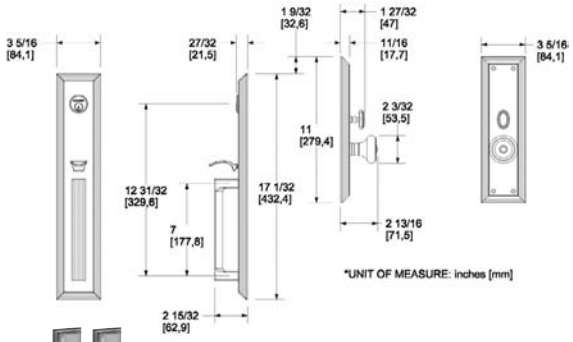

Trim width: 3.3″
Trim thickness: .75″ – J

Sets	6542.xxx.ENTR	6542.xxx.DBLC	6542.xxx.FD	6605.xxx.BB75 (BB30, BBFD)
Exterior Trim	6605.xxx	6605.xxx	6605.xxx.DM	6605.xxx. (x2)
Interior Escutcheon	6796.xxx.KT	6796.xxx.KC	6796.xxx.KN	
Knob/Lever	5020.xxx.IMR	5020.xxx.IMR	5020.xxx.IMR	
Spindle	0531 (2.875″ Half)	0531 (2.875″ Half)	5077 (1.5″ Double)	
Cylinder	8326 (1.75″ Door)	(Double)	6761 (Dummy)	• (Double)
Mortise Lock	•	•		•
Blocking Ring		•		•

Designer	Entrance	Entrance	Double Cylinder	Privacy	Passage
Exterior Trim	6605.xxx	6796.xxx.KC	6796.xxx.KC	6796.xxx.KE**	
Interior Escutcheon	6796.xxx.KE** (.KE is cut for ER or Turn Knob – if standard Turn Knob is desired, order .KT)	6796.xxx.KT	6796.xxx.KC	6796.xxx.KT or .KP	6796.xxx.KN (x2)
REQUIRED — Knob/Lever	5162.xxx.RMR (.LMR) (Lever)	Pair	Pair	Pair	Pair
Spindle	•	•	•	•	•
Cylinder	•	•	• (Double)		
Mortise Lock	•	•	•	• (Mortise Bolt or Mortise Lock)	• (Latch or Interior Mortise Lock)
Blocking Ring			•		
Turn Knob	•				

SEE BACK COVER FLAP for easy-ordering charts and requirements for doors thicker than 1.75″

MUST ORDER SEPERATELY
shown in grey

****(All .KE hardware include 6701 ER cover)**

BALDWIN

***QUICK SHIP** is available in **limited functions and finishes.**
For complete listing, please refer to page 272.

TRENTON

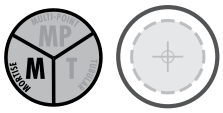

	Item #	Description		Wt.	003, 031, 050, 060, 102 112, 150, 151 190, 260, 264	044 055, 056
SET	6567.xxx.ENTR	Entrance Trim – **Trenton**	Set	9.5	$753	$842
	6567.xxx.DBLC	Double Cylinder	Set		$753	$842
	6567.xxx.FD	Full Dummy	Set		$753	$842
	6567.xxx.ENFD†	1 Active Entrance Set + 1 Full Dummy Set	2 Sets		$1,508	--
EXT	6602.xxx	Active Exterior Trim only	Each		$427	$468
	6602.xxx.DM	Dummy Exterior only	Each		$427	$468
INTERIOR		Interior Escutcheon –				
	6508.xxx.KC	Cut for Cylinder (KC), Double Cylinder	Each		$228	$269
	6508.xxx.KN	Cut for Knob (KN), Passage/Dummy	Each		$228	$269
	6508.xxx.KT	Interior Escutcheon w/ Turn Knob (KT)	Each		$269	$315
INTERIOR		Interior Escutcheon –				
	6765.xxx.KC	Cut for Cylinder (KC), Double Cylinder	Each		$228	$269
	6765.xxx.KE**	Cut for Emergency Release (KE)	Each		$228	$269
	6765.xxx.KN	Cut for Knob (KN), Passage/Dummy	Each		$228	$269
	6765.xxx.KT	Interior Escutcheon w/ Turn Knob (KT)	Each		$269	$315

Exterior screws are decorative only.
†.ENFD only available in 050 & 112, to ensure a finish match on all components.

Style not recommended for 2-1/2 backset locks.

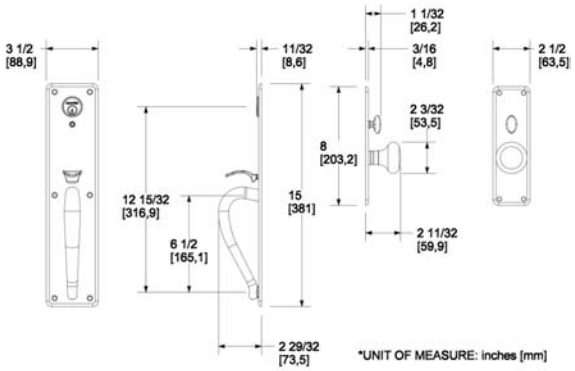

Trim width: 2.25″
Trim thickness: .1875″ – D

Trenton **Sets**	6567.xxx.ENTR	6567.xxx.DBLC	6567.xxx.FD
Exterior Trim	6602.xxx	6602.xxx	6602.xxx.DM
Interior Escutcheon	6508.xxx.KT	6508.xxx.KC	6508.xxx.KN
Knob/Lever	5015.xxx.IMR	5015.xxx.IMR	5015.xxx.IMR
Spindle	0530 (2.375″ Half)	0530 (2.375″ Half)	5092 (1.125″ Dummy)
Cylinder	8322 (1.75″ Door)	• (Double)	6761 (Dummy)
Mortise Lock	•	•	
Blocking Ring		•	

In an effort to simplify the mortise trim offering, some escutcheon trim sets will no longer be available pre-configured. However, these configurations are still available a la carte. See breakouts below by function.

Formerly the Reading Configuration **Sets**	Entry	Double Cylinder	Full Dummy
Exterior Trim	6765.xxx.KC	6765.xxx.KC	
Interior Escutcheon	6765.xxx.KT	6765.xxx.KC	6765.xxx.KN (x2)
Knob/Lever	5015.xxx.MR (Pair)	5015.xxx.MR (Pair)	5015.xxx.MR (Pair)
Spindle	0522 (4″ Swivel)	0522 (4″ Swivel)	0511 (4″ Straight)
Cylinder	•	• (Double)	5099.004 (x2)
Mortise Lock	•	•	
Blocking Ring		•	

	Designer	Trenton Entrance	6765 Privacy
	Exterior Trim	6602.xxx	6765.xxx.KE**
	Interior Escutcheon	6508.xxx.KT	6765.xxx.KT
REQUIRED —	**Knob/Lever**	Half Pair	Pair
	Spindle	•	•
	Cylinder	•	
	Mortise Lock	• (Lever Strength)	• (Latch & Bolt or Lock)
	Turn Knob		
	Other		

SEE BACK COVER FLAP for easy-ordering charts and requirements for doors thicker than 1.75″

***QUICK SHIP** is available in **limited functions and finishes.**
For complete listing, please refer to page 272.

****(All .KE hardware include 6701 ER cover)**

MUST ORDER SEPERATELY
shown in grey

VICTORIA™

	Item #	Description		Wt.	003, 031, 033 050, 060, 102 112, 150, 151 190, 260, 264	044, 055, 056, 402, 452
SET	6948.xxx.RENT (LENT)	Entrance Trim – **Victoria**	Set	9.5	$930	$1,017
	6948.xxx.RDBL (LDBL)	Double Cylinder	Set		$930	$1,017
	6948.xxx.RFD (LFD)	Full Dummy	Set		$930	$1,017
	6948.xxx.ENFD†	1 Active Entrance Set + 1 Full Dummy Set	2 Sets		$1,858†	—
	6956.xxx.BB75	Entrance Back-to-Back – 1.75″ door	Set		$1,279	$1,368
	6956.xxx.BBFD	Dummy Back-to-Back	Set		$1,279	$1,368
EXT	6956.xxx	Active Exterior Trim only	Each		$689	$743
	6956.xxx.DM	Dummy Exterior only	Each		$689	$743
EXT	6933.xxx.RDM (LDM)	Dummy Exterior only	Each		$251	$292
INT		Interior Escutcheon –				
	6993.xxx.KC	Cut for Cylinder (KC), Double Cylinder	Each		$228	$269
	6993.xxx.KE**	Cut for Emergency Release (KE)	Each		$228	$269
	6993.xxx.KN	Cut for Knob (KN), Passage/Dummy	Each		$228	$269
	6993.xxx.KT	Interior Escutcheon w/ Turn Knob (KT)	Each		$269	$315

†.ENFD only available in 050 & 112, to ensure a finish match on all components.

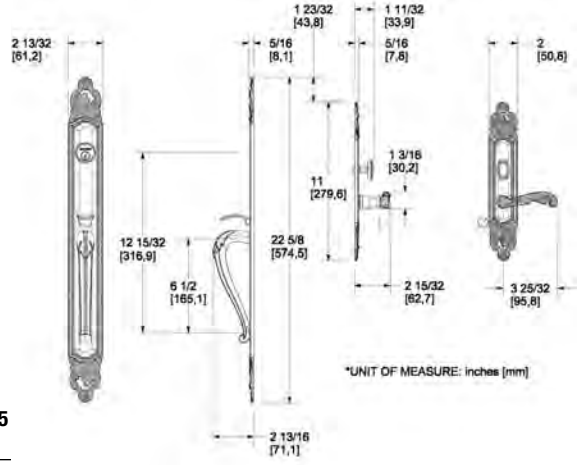

Victoria **Sets**	6948.xxx.RENT (LENT)	6948.xxx.RDBL (LDBL)	6948.xxx.RFD (LFD)	6956.xxx.BB75 (BBFD)
Exterior Trim	6956.xxx	6956.xxx	6956.xxx.DM	6956.xxx (x2)
Interior Escutcheon	6993.xxx.KT	6993.xxx.KC	6993.xxx.KN	
Knob/Lever	5121.xxx.LMR (RMR)	5121.xxx.LMR (RMR))	5121.xxx.LMR (RMR)	
Spindle	0533 (2.25″ Half)	0533 (2.25″ Half)	5092 (1.125″ Dummy)	
Cylinder	8322 (1.75″ Door)	• (Double)	6761 (Dummy)	• (Double)
Mortise Lock	• (Lever Strength)	•		•
Blocking Ring		•		•

Trim width: 2.4″
Trim thickness: .188″ – D

In an effort to simplify the mortise trim offering, some escutcheon trim sets will no longer be available pre-configured. However, these configurations are still available a la carte. See breakouts below by function.

Formerly the Versailles Configuration **Sets**	Entry	Double Cylinder	Full Dummy
Exterior Trim	6993.xxx.KC	6993.xxx.KC	
Interior Escutcheon	6993.xxx.KT	6993.xxx.KC	6993.xxx.KN (x2)
Knob/Lever	5121.xxx.MR (Pair)	5121.xxx.MR (Pair)	5121.xxx.MR (Pair)
Spindle	0520 (3.5″ Swivel)	0520 (3.5″ Swivel)	0510 (3.5″ Straight)
Cylinder	•	• (Double)	5099.004 (x2)
Mortise Lock	• (Lever Strength)	• (Lever Strength)	
Blocking Ring		•	

Designer	Victoria Entrance	6993 Privacy
Exterior Trim	6956.xxx	6993.xxx.KE**
Interior Escutcheon	6993.xxx.KT	6993.xxx.KT
Knob/Lever	Half Pair	Pair
Spindle	•	•
Cylinder	•	
Mortise Lock	• (Lever Strength)	• (Latch & Bolt or Lock)
Blocking Ring		
Turn Knob		

REQUIRED —

SEE BACK COVER FLAP for easy-ordering charts and requirements for doors thicker than 1.75″

MUST ORDER SEPERATELY
shown in grey

**(All .KE hardware include 6701 ER cover)

WILLIAMSBURG / GEORGETOWN™

Available while supplies last.

	Item #	Description		Wt.	003, 031 050, 060, 102 112, 150, 151 190, 260, 264	044, 055, 056, 402, 452
SET	6549.xxx.RENT (LENT)	Entrance Trim – **Williamsburg**	Set	9.5	$753	$842
	6549.xxx.RDBL (LDBL)	Double Cylinder	Set		$753	$842
	6549.xxx.RFD (LFD)	Full Dummy	Set		$753	$842
	6549.xxx.ENFD†	1 Active Entrance Set + 1 Full Dummy Set	2 Sets		$1,508	$-
	6628.xxx.BB75	Entrance Back-to-Back – 1.75″ door	Set		$1,221	$1,309
	6628.xxx.BB30	Entrance Back-to-Back – up to 3″ door	Set		$1,221	$1,309
	6628.xxx.BBFD	Dummy Back-to-Back	Set		$1,221	$1,309
EXT	6628.xxx	Active Exterior Trim only	Each		$427	$468
	6628.xxx.DM	Dummy Exterior only	Each		$427	$468
INTERIOR		Interior Escutcheon –				
	6505.xxx.KC	Cut for Cylinder (KC), Double Cylinder	Each		$228	$269
	6505.xxx.RKE (LKE)	Cut for Emergency Release (KE)	Each		$228	$269
	6505.xxx.RKN (LKN)	Cut for Knob (KN), Passage/Dummy	Each		$228	$269
	6505.xxx.RKT (LKT)	Interior Escutcheon w/ Turn Knob (KT)	Each		$269	$315

†.ENFD only available in 050 & 112, to ensure a finish match on all components.

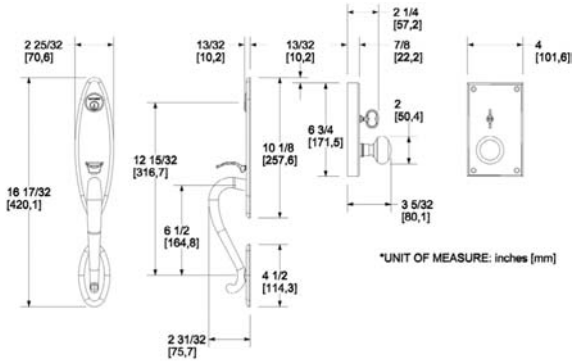

Williamsburg **Sets**	6549.xxx.RENT (LENT)	6549.xxx.RDBL (LDBL)	6549.xxx.RFD (LFD)	6622.xxx.BB75 (BB30, BBFD)
Exterior Trim	6628.xxx	6628.xxx	6628.xxx.DM	6628.xxx (x2)
Interior Escutcheon	6505.xxx.RKT (LKT)	6505.xxx.KC	6505.xxx.RKN (LKN)	
Knob/Lever	5000.xxx.IMR	5000.xxx.IMR	5000.xxx.IMR	
Spindle	0531 (2.875″ Half)	0531 (2.875″ Half)	5077 (1.5″ Dummy)	
Cylinder	8323 (1.75″ Door)	• (Double)	• (Dummy)	• (Double)
Mortise Lock	•	•		•
Blocking Ring		•		

Trim width: 2.75″
Trim thickness: .3125″ – F
Interior trim thickness: .875″ – K

NOTE: NOT available for Reverse Bevel conditions
Not available for doors thicker than 3″

In an effort to simplify the mortise trim offering, some escutcheon trim sets will no longer be available pre-configured. However, these configurations are still available a la carte. See breakouts below by function.

Georgetown **Sets**	Entry (LENT)	Double Cylinder (LDBL)	Full Dummy (LFD)
Cylinder Collar	6757.xxx	6757.xxx	
Rose	5002.xxx.I	5002.xxx.I	5002.xxx.I
Interior Escutcheon	6505.xxx.RKT	6505.xxx.KC	6505.xxx.RKN
Knob/Lever	5000.xxx.MR (Pair)	5000.xxx.MR (Pair)	5000.xxx.MR (Pair)
Spindle	0526 (4.5″ Swivel)*	0526 (4.5″ Swivel)*	0512 (4.5" Straight)*
Cylinder	•	• (Double)	
Mortise Lock	•	•	
Blocking Ring		•	

*Spindle shown for 1.75" door thickness. For other door thicknesses, please contact Baldwin customer service.

ER Trim

Designer	Williamsburg Entrance	Georgetown Privacy
Exterior Trim	6628.xxx	
Interior Escutcheon	6505.xxx.LKT	6505.xxx.LKT
Knob/Lever	5106.xxx.RMR (.LMR)	Pair
Spindle	•	•
Cylinder	•	
Mortise Lock	• (Lever Strength)	• Latch & Mortise Bolt or Lock
Turn Knob		
Other		ER Trim, Rose (for Exterior)

REQUIRED —

SEE BACK COVER FLAP for easy-ordering charts and requirements for doors thicker than 1.75″

***QUICK SHIP** is available in **limited functions and finishes.**
For complete listing, please refer to page 272.

****(All .KE hardware include 6701 ER cover)**

MUST ORDER SEPERATELY
shown in grey

1.75″– 2.25″ DOORS (MORTISE)

Give your doors of distinction the hardware to match with Baldwin luxury entrysets—now easily compatible with custom decorative iron/steel doors in a wide range of thicknesses.

- >Kits available for doors 1.5″ to 2.25″ thick
- >Mortise and tubular options available
- >Choose from dozens of Baldwin styles
- >Easy to implement

FINISH EQUIVALENCIES

FINISH EQUIVALENCY GRID*

Trim Finish		Kit Finish	Trim Finish		Kit Finish	Trim Finish		Kit Finish	Trim Finish		Kit Finish
003	=	221	050	=	102	112	=	112	260	=	140
	=	221	055	=	140	140	=	140	264	=	140
031	=	221	056	=	140	150	=	140	402	=	102
033	=	221	060	=	221	151	=	151	412	=	112
044	=	221	102	=	102	190	=	102	452	=	151

*Does not apply to 6501 A-C kits due to blocking rings

THICK DOOR KITS

1.75″ to 2.25″ door thickness mortise handlesets

MORTISE HANDLESETS, STEEL DOOR

Kit	For Entrance Trim #	102, 112 140, 151, 221
6599.XXX.THKA	Monterey (6565, .0937″)	$27
6599.XXX.THKB	Victoria (6948, .1875″), Kensington (6950, .3125″)	$27
6599.XXX.THKC	San Diego (6540, .0937″), Lancaster (6543, .0937″), Richmond (6557, .0937″), Dallas (6931, .0937″)	$27
6599.XXX.THKD	Bristol (6963, .375″), Concord (6571, .25″)	$27
6599.XXX.THKE	Springfield (6573, .3125″), Lexington (6560, .3125″), Atlanta (6570, .375″), Minneapolis (6976, .375″), Boulder (M512/M514, .53″), Cody (M502/M504, .53″), Trenton (6567, .1875″), Pasadena (6944, .375″), Palm Springs (6920, 6921)	$27
6599.XXX.THKF	Williamsburg (6549, .3125″)	$27
6599.XXX.THKG	New York (6562, .25″)	$27
6599.XXX.THKH	Chicago (6563, .0937″)	$27
6599.XXX.THKI	Edinburgh (6952, .435″), Richland (6999, .435″)	$27
6599.XXX.THKJ	Edinburgh Sectional (6515, .5625″), Oval Edinburgh (6516, .5625″), Bristol Sectional (6520, .5625″), 3/4 Kensington (6526, .5625″)	$27
6599.XXX.THKK	Hamilton (6544, .75″), Tremont (6542, .75″)	$27
6599.XXX.THKL	Lakeshore (6966, .396″)	$27

REQUIRED for all doors over 1.75″ and up to 2.25″ thick Thick Door Kits are for Handlesets ONLY, not Entrance Sets (Entrance sets are knob x knob or lever x lever)

MORTISE, WOOD DOOR

Kit	For Entrance Trim #	Price
6501.000.A	6515, 6520, 6526, 6540, 6541, 6543, 6549, 6556, 6557, 6560, 6564, 6565, 6567, 6568, 6570, 6571, 6572, 6573, 6931, 6946, 6948, 6950, 6963, 6976 active & dummy	$7
6501.000.B	6548, 6562, 6563, 6915 active & dummy	$25
6501.000.C	6920, 6921, 6944, 6952, 6999 active & dummy, M502, M504, M512, M514, M516, M522	$35
6501.000.D	6542, 6544, 6545 ACTIVE ONLY	$21
6501.000.E	6542, 6544, 6545 DUMMY ONLY	$27
6501.000.F	6966, 6974	$31

REQUIRED for all doors over 1.75″ and up to 2.25″ thick Thick Door Kits

***QUICK SHIP** is available in **limited functions and finishes.**
For complete listing, please refer to page 272.

1.5″– 1.625″ STEEL DOORS (MORTISE & TUBULAR)

THIN STEEL DOOR KITS – Mortise

1.5″ to 1.625″ Door Thickness Mortise Handlesets

Item #	For Entrance Trim #	003, 031, 033 050, 060, 102 112, 150, 151 190, 260, 264	044, 055, 056, 402, 452
6501.XXX.15A	San Diego (6540, .0937"), Lancaster (6543, .0937"), Richmond (6557, .0937"), Dallas (6931, .0937")	$48	$53
6501.XXX.15B	Monterey (6565, .0937")	$48	
6501.XXX.15C	Chicago (6563, .0937)	$35	

Item #	For Entrance Trim #	037, 102 112, 140 151, 221
6501.XXX.15D	Victoria (6948, .1875"), Kensington (6950, .3125"), Edinburgh (6952, .435")	$35
6501.XXX.15E	Trenton (6567, .1875"), Concord (6571, .25")	$35
6501.XXX.15G	New York (6562, .25")	$30
6501.XXX.15H	Williamsburg (6549, .3125")	$35
6501.XXX.15I	Springfield (6573, .3125"), Lexington (6560, .3125"), Atlanta (6570, .375"), Minneapolis (6976, .375"), Boulder (M512/M514, .53"), Cody (M502/M504, .53")	$35
6501.XXX.15J	Lakeshore (6966, .396")	$35
6501.XXX.15L	Richland (6999, .435")	$41
6501.XXX.15M	Pasadena (6944, .375")	$41
6501.XXX.15N	Bristol (6963, .375"), Edinburgh Sectional (6515, .5625"), Oval Edinburgh (6516, .5625"), Bristol Sectional (6520, .5625"), ¾ Kensington (6526, .5625")	$35
6501.XXX.15O	Hamilton (6544, .75"), Tremont (6542, .75")	$41

REQUIRED for all doors 1.5″ and up to 1.625″ thick Thin Door Kits are for Handlesets ONLY, not Entrance Sets (Entrance sets are knob x knob or lever x lever)

THIN STEEL DOOR KITS – Tubular

1.5″ Door Thickness Tubular Handlesets

Item #	For Entrance Trim #	030, 031 050, 102 112, 150 151, 190 260, 264	003, 055 056, 402 412, 452
5397.xxx.15E	**EGRESS**: Bethpage 3/4 (85337), Blakely (85360), Boulder (85354), Cody (85352), Manchester (85350), Stonegate (85335)	$59	$65
5397.xxx.15F	**EGRESS**: Bristol (6420), Boulder (6402), Cody (6403), Devonshire (6401), Edinburgh (6415 & 6416), Kensington (6426)	$59	$65

SPECIFICATIONS

2.75″ Backset
for doors 1.75″ thick and over

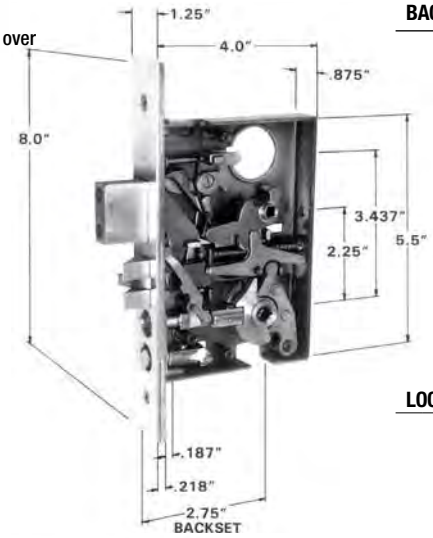

2.5″ Backset
for doors 1.375″ thick and over

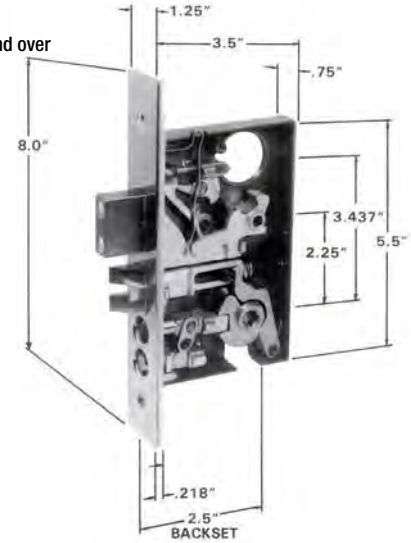

1.5″ & 2″ Backset
for doors 1.375″ thick and over

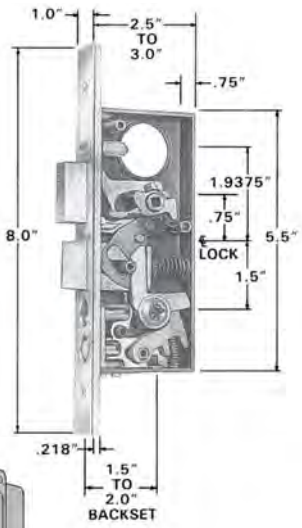

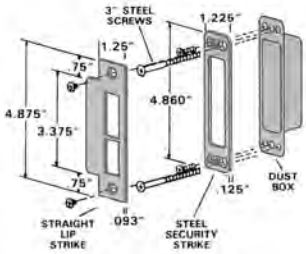

BACKSET:

2.75″ – for doors 1.75″ thick and over	**STEEL CASE**: .875″ × 4″ × 5.5″ (22 × 102 × 140mm)
2.5″ – for doors 1.375″ thick and over, 1.375″ doors REQUIRE 1″ FRONT **NOTE**: Baldwin recommends the usage of 2.75" backset locks for doors thicker than 2" or doors 8ft or taller.	**STEEL CASE**: .75″ × 3.5″ × 5.5″ (19 × 89 × 140mm)
1.5″ (38mm) and 2″ (51mm) Narrow Backset – for doors 1.375″ thick and over **NOTE**: Baldwin recommends the usage of 2.75" backset locks for doors thicker than 2" or doors 8ft or taller.	**STEEL CASE**: 1.5″ Backset: .75″ × 1.5″ × 5.5″ (19 × 64 × 140mm) 2.0″ Backset: .75″ × 3″ × 5.5″ (19 × 76 × 140mm)

LOCK SPECIFICATIONS:

>Standardized heavy steel case is smooth, easy to mortise, and assures snug and solid fit in door mortise.
>Vital interior working parts are made of solid hot forged brass or steel for a lifetime of trouble-free operation.
>All lock cases are constructed of heavy gauge steel (.093–2.4mm - material) and plated with a protective rust-resistant coating to retard oxidation.
>All locks and strikes are designed to fit standard preparation ANSI A115.1 (face cutouts are subject to variation).
>Locks have adjustable forged brass lock fronts, protected by armored scalp fronts for ultimate Strength and protection against tampering.
>All KEYED lock functions illustrated within this section are furnished with a specially-designed security strike constructed of high grade steel for ultimate Strength and durability. The security strike is mortised into the wood jamb and anchored to the structural components of the opening with two 3″ steel screws and covered with a finished strike to conceal the fasteners.
>Most lock functions are completely reversible in the field to facilitate installation
>The bevel of front is adjustable from flat to standard bevel .125″ on 2″ (3mm on 51mm).
>Most metal door and frame manufacturers have provided reinforcements for Baldwin Mortise Locks.

FRONT: Hot forged brass .218″ × 1.25″ × 8″ (6 × 32 × 203mm). Adjustable for beveled conditions.

SCALP: Wrought brass and bronze, available in standard finishes.

ANTI-FRICTION LATCH BOLT: Furnished with all 2.75″ and 2.5″ backset locks
2.75″ – .625″ × 1″ (16 × 25mm) × .75″ (19mm) throw.
2.5″ – .5″ × 1″ (13 × 25mm) × .75″ (19mm) throw
Furnished in US4 and 26D finishes to match trim

SOLID LATCH BOLT: All 1.5″ (38mm) and 2″ (51mm) backset locks are furnished standard with a solid latch bolt of .5″ (13mm) throw and 1″ (25mm) wide front. An optional 1.25″ (32mm) wide front is available.

DEADBOLT: 2.5″ and 2.75″ backsets equipped with a 1″ (25mm) throw deadbolt with two hardened steel inserts for maximum protection and security. All deadbolts are of forged brass construction. Locks designed with 1.5″ (38mm) and 2″ (51mm) backsets have a .5″ (13mm) throw deadbolt.
Furnished in US4 and 26D finishes to match trim.

HUB SIZE: .29″ (7mm) with two-way rotation. Broached on the diamond. (One-way rotation on LS functions).

SPACING: center to center of:
- Knob Hub to cylinder 3.437″ (87mm)
- Knob Hub to turn piece 2.25″ (57mm)

CYLINDER: Standard mortise type with 03 keyway and two nickel silver keys. Cylinder is not supplied with lock.

KEYING: All levels of Keying including Construction Keying are available.

STRIKE: Wrought brass and bronze finished to match. Supplied to ANSI standard A115.1, 1.25″ (32mm) lip to center. Locks furnished standard with straight lip strike (Universal) and dust box. Curved lip and special length strikes available. All KEYED lock functions are furnished standard with a high grade steel security strike and two 3″ steel screws.

TEMPLATE: Metal doors/frames to be prepared in accordance with ANSI A115.1 or A115.11. Face cutouts are subject to variation. always review trim requirements before door preparation.

WARNING: 1.5″ AND 2.0″ BACKSET LOCKS ARE designed to be used with levers. If knobs are specified, customer should be advised that the knob will only turn in one direction and will have a stiff turning action: NOT RECOMMENDED.

c UL us LISTED

All 2.5″ and 2.75″ Entrance Mortise Locks are U/L Listed

Baldwin UL-listed 2.5″ and 2.75″ mortise locks meet US standard UL-10C and Canadian standard CAN4 S104-M80for survival of a 3-hour burn under positive pressure. All Baldwin Estate Collection mortise entry trim and Estate Collection knob/lever trim may be used with Baldwin UL-listed mortise locks.

SPECIFICATIONS | HOW TO ORDER

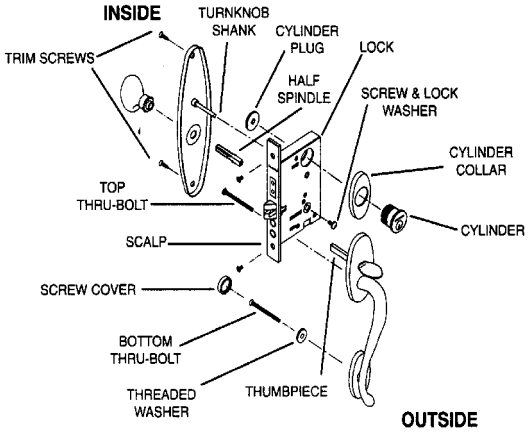

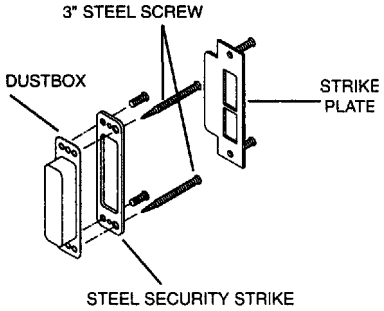

Trim Symbol	Description	2.75˝ BACKSET (Handle Sets, Knobs & Levers)	2.5˝ BACKSET (Handle Sets, Knobs & Levers)	2˝ BACKSET (Handle Sets & Levers)	1.5˝ BACKSET (Handle Sets & Levers)
ENTR	Entrance Function	6001, 6010, 6020, 6021, 6070, 6075, 6077, 6091	6301, 6310, 6320, 6321, 6375	6802, 6812, 6832	6800, 6810, 6830
SGLC	Single Cylinder Function	6051, 6053, 6060, 6065, 6066, 6130	—	—	—
EXTR	Exterior Patio Function	6055, 6100	6315	6847	6845
PRIV	Privacy Function	6055, 6100	6315	6847	6845
PASS	Passage Function	6110	6318	6857	6855
BB75	Back To Back Handle Sets	6025	6325	—	—

NOTE: Entrance function locks may be used in either single cylinder or double cylinder applications.
TO ORDER: 2.75˝/2.5˝ backset locks for levers, specify LS (Lever Strength) after lock number (i.e. 6375.030.RLS LOCK - RH).
NOTE: 1.5˝ and 2.0˝ Backset Locks are designed to be used with levers. If knobs are specified, customer should be advised that the knob will only turn in one direction and will have a stiff turning action: NOT RECOMMENDED.
CURVED LIP STRIKES: Locks may be ordered with curved lip strikes. The hand of strike will match the hand of the door. Please specify hand of door when ordering. A left hand reverse door will use a right hand strike and a right hand reverse door will use a left hand strike.
*Optional 1˝ (25mm) front with .75˝ (19mm) solid latch bolt available for doors of 1.375˝ (35mm) in thickness. Furnished standard with a curved lip strike.

HOW TO ORDER MORTISE LOCKS

1. **All Mortise Locks have a handed Suffix (.R or .L)**
2. **All Mortise Locks are either Knob Strength (no addition to Suffix) or Lever Strength (LS added to the Suffix)**

WARNING: DO NOT USE Lever Strength mortise locks with knobs. They only turn one way and have a stiff turning action suitable for levers.

3. **Other Mortise Lock options:**
   Reverse Bevel doors (RR or LR)
   Minus Strike (DT), when an Extended Lip Strike is needed (order Strike separately) Optional 1˝ Front (1) for 1.375˝ doors
4. **ALWAYS REVIEW SUFFIX CHART!**

SUFFIX CHART

	Suffix	Minus Strike	With 1˝ Front*
Right hand	.R	.RDT	.R1DT
Left hand	.L	.LDT	.L1DT
Right hand Reverse bevel	.RR	.RRDT	.RR1DT
Left hand Reverse bevel	.LR	.LRDT	.LR1DT
Right hand Lever Strength	.RLS	.RLSDT	.RLS1DT
Left hand Lever Strength	.LLS	.LLSDT	.LLS1DT
Right hand Reverse bevel Lever Strength	.RRLS	. RRLSDT	.RRLS1DT
Left hand Reverse bevel Lever Strength	.LRLS	. LRLSDT	.LRLS1DT

*Applies to 2.5˝ backset locks. For 1˝ Front DT Distinguishes minus strike. If ordering with strike, do not include the DT note.

ENTRANCE FUNCTIONS

List of available handling options	Suffix*
Right hand	.R
Left hand	.L
Right hand Reverse bevel	.RR
Left hand Reverse bevel	.LR
Right hand Lever Strength	.RLS
Left hand Lever Strength	.LLS
Right hand Reverse bevel Lever Strength	.RRLS
Left hand Reverse bevel Lever Strength	.LRLS
Right hand Reverse bevel Lever Strength with 1″Front	.RRB1
Left hand Reverse bevel Lever Strength with 1″Front	.LRB1

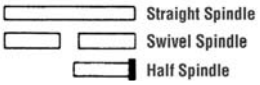

Spindle Key

Item #	Description		Backset	Wt.	Std. Strike	003, 031, 033, 050 060 102, 112 150, 151 152 190, 260, 264	044, 055, 056
6001.xxx.Suffix*	Entrance/Apartment	Knob x Knob/Lever x Lever	2.75″	3.0	6040	$404	$427
6020.xxx.Suffix*	Residential Entrance	Handleset x Knob/Lever	2.75″	3.0	6040	$404	$427
6021.xxx.Suffix*	Entrance – Emergency Egress	Handleset x Knob/Lever	2.75″	3.0	6040	$404	$427
6025.xxx.Suffix*	Entrance Back-to-Back	Handleset x Handleset	2.75″	3.0	6040	$404	$427
6066.xxx.Suffix*	Electrified Strike Entrance	Handleset x Knob/Lever	2.75″	2.8	N/A	$404	$427
6075.xxx.Suffix*	Entrance – Emergency Egress	Knob x Knob/Lever x Lever	2.75″	3.0	6040	$404	$427
6301.xxx.Suffix*	Entrance/Apartment	Knob x Knob/Lever x Lever	2.5″	3.0	6340	$404	$427
6310.xxx.Suffix*	Entrance/Storeroom	Knob x Knob/Lever x Lever	2.5″	3.0	6340	$404	$427
6320.xxx.Suffix*	Residential Entrance	Handleset x Knob/Lever	2.5″	3.0	6340	$404	$427
6321.xxx.Suffix*	Entrance – Emergency Egress	Handleset x Knob/Lever	2.5″	3.0	6340	$404	$427
6325.xxx.Suffix*	Entrance Back-to-Back	Handleset x Handleset	2.5″	3.0	6340	$404	$427
6375.xxx.Suffix*	Entrance – Emergency Egress	Knob x Knob/Lever x Lever	2.5″	3.0	6340	$404	$427
6800.xxx.Suffix*	Entrance/Apartment	Lever x Lever	1.5″	3.0	6340	$404	$427
6802.xxx.Suffix*	Entrance/Apartment	Lever x Lever	2″	3.0	6340	$404	$427
6810.xxx.Suffix*	Entrance/Storeroom	Lever x Lever	1.5″	3.0	6340	$404	$427
6812.xxx.Suffix*	Entrance/Storeroom	Lever x Lever	2″	3.0	6340	$404	$427
6832.xxx.Suffix*	Residential Entrance	Handleset x Lever	2″	3.0	6340	$404	$427
All Mortise Locks shown above Minus Strike (.DT)						$369	$386

Mortise Locks NOT available in Distressed finishes, non-distressed equivalents 402=102, 452=152

2.75″ backsets comes with the 1.25″ front.

2.5″ backsets comes with the 1.25″ front. Non-standard 1″ inch fronts are available for a 10% additional charge. To order non-standard front, add a '1' at the end of the Item #. ie 6802.112.R1 (except Reverse Bevel, LRB1, RRB1 and cannot apply to 2.75" backsets)

2″ backsets comes with the 1″ front. Non-standard 1.25″ fronts are available for a 10% additional charge. To order non-standard front, add a '125' at the end of the Item #. ie 6802.112.R125 (except Reverse Bevel, LRB1, RRB1 and cannot apply to 2.75" backsets)

> Specify handing with Suffix* after finish designation (Suffix chart above left)

> Some Baldwin mortise locks are reversible in the field if needed – see individual functions

NOTE: Baldwin recommends the usage of 2.75" backset locks for doors thicker than 2" or doors 8ft or taller.

WARNING: DO NOT USE lever Strength mortise locks with knobs. They only turn one way and have a stiff turning action suitable for levers.

6001, 6301, 6800, 6802
Entrance and Apartment

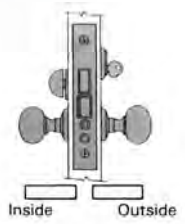

> Latch bolt by knob from either side, except when outside knob is locked by stop in front; then latch bolt by key outside and knob inside.
> Deadbolt by key outside and turn piece inside. Continuous turn of key outside retracts both latch and Deadbolt.
> 1″ (25mm) throw Deadbolt with saw-proof inserts is standard equipment. (Not available for 2″ or smaller backsets)
> When extended, Deadbolt deadlocks latch bolt (not true for 6800 & 6802)

FEDERAL SPECIFICATION EQUIVALENTS (FSE): ANSI Series: 1000-F08/F10
NOTE: For single and double cylinder applications

6025, 6325
Back-To-Back Entrance

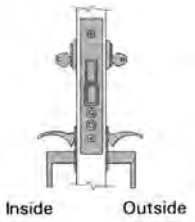

> Latch bolt by thumb piece from either side, except when outside thumb piece is locked by stop in front, then latch bolt by key either side and thumb piece inside.
> Deadbolt by key either side, continuous turn of key retracts both latch and Deadbolt.
> 1″ (25mm) throw Deadbolt with saw-proof inserts is standard equipment. When extended, Deadbolt deadlocks latch bolt.

NOTE: To order and price complete trim sets, order two sets of exterior handle trim in "BBXX″ configuration. Baldwin Mortise Lock Turn Piece cylinder 844X.XXX may be used for interior, see page 160.

6020, 6320, 6832
Residential Entrance

> Latch bolt by thumb piece outside and knob inside, except when thumb piece is locked by stop in front; then latch bolt by key outside and knob inside.
> Deadbolt by key outside and turn piece inside.
> Continuous turn of key outside retracts both latch and Deadbolt.
> 1″ (25mm) throw Deadbolt with saw-proof inserts is standard equipment. (Not available for 2″ or smaller backsets)
> When extended, Deadbolt deadlocks latch bolt.(not true for 6830 & 6832)

FSE: Government Type: 122A
NOTE: May be used in single and double cylinder applications

***QUICK SHIP** is available in **limited functions and finishes.**
For complete listing, please refer to page 272.

ENTRANCE FUNCTIONS

6066
Electric Strike Entrance

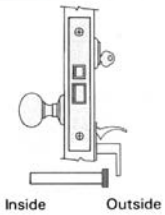

>Latch bolt by knob inside and key outside. Outside trim is always rigid.
>Auxiliary latch deadlocks latch bolt.
>Optional solid latch bolt is available with this lock.
>Caution should be used to ensure that the electric strike being used properly engages the latch mechanism while depressing the auxiliary latch.

NOTE: A full dummy trim with an active spindle is recommended for use with this lock.

6021, 6321
Residential Entrance, Emergency Egress

>Latch bolt by thumb piece outside and knob inside, except when thumb piece is locked by stop in front; then latch bolt by key outside and knob inside.
>Deadbolt by key outside and turn piece inside.
>When Deadbolt is thrown, stop is automatically activated making outside thumb piece rigid. Inside knob retracts latch and Deadbolt simultaneously but outside remains LOCKED.
>1˝ (25mm) throw Deadbolt with saw-proof inserts is standard equipment.
>When extended, Deadbolt deadlocks latch bolt.

NOTE: Not recommended for double cylinder applications.
NOTE: 6321 - NOT FIELD REVERSIBLE

6075, 6375
Entrance, Emergency Egress

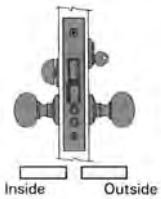

>Latch bolt by knob from either side, except when outside knob is locked by stop in front; then latch bolt by key outside and knob inside. Deadbolt by key outside and turn piece inside. When Deadbolt is thrown, stop is automatically activated making outside knob rigid. Inside knob retracts latch and Deadbolt simultaneously but outside remains LOCKED.
>1˝ (25mm) throw Deadbolt with saw-proof inserts is standard equipment. When extended, Deadbolt deadlocks latch bolt.

FSE: ANSI Series: 1000-F12/F20
NOTE: Not recommended for double cylinder applications.
NOTE: 6375 - NOT FIELD REVERSIBLE

6310, 6812, 6810
Entrance And Storeroom

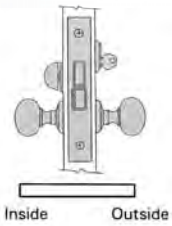

>Latch bolt by knob either side. Deadbolt by key outside and turn piece inside.
>1˝ (25mm) throw Deadbolt with saw-proof inserts is standard equipment.
(Not available for 2˝ or smaller backsets)
When extended, Deadbolt deadlocks latch bolt.

FSE: ANSI Series: 1000-F21
NOTE: for single and double cylinder applications.

GRADE 1 COMMERCIAL LOCKS FOR SURFACE MOUNTED TRIMS

List of available handling options	Suffix*
Right hand Lever Strength	.RLS
Left hand Lever Strength	.LLS
Right hand Reverse bevel Lever Strength	.RRLS
Left hand Reverse bevel Lever Strength	.LRLS

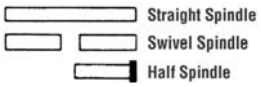

Spindle Key

Swivel spindles are recommended for all Grade 1 Mortise Locks, except G110-G311 Passage

Item #	Description		ANSI	Backset	003, 031, 033, 050 060, 102, 112 150, 151 152 190, 260, 264	044, 055, 056
G6010.xxx.Suffix*	Dormitory Entrance or Storeroom	Lever x Lever	F21	2.75″	$438	$462
G6055.xxx.Suffix*	Privacy, Bedroom or Bathroom	Lever x Lever	F19	2.75″	$392	$415
G6060.xxx.Suffix*	Classroom, Entrance or Office	Lever x Lever	F04		$392	$415
G6065.xxx.Suffix*	Storeroom or Closet	Lever x Lever	F07		$392	$415
G6075.xxx.Suffix*	Entrance or Apartment	Lever x Lever	F12	2.75″	$438	$462
G6085.xxx.Suffix*	Entrance or Public Restroom	Lever x Lever	F09	2.75″	$392	$415
G6090.xxx.Suffix*	Store Door	Lever x Lever	F14	2.75″	$438	$462
G6110.xxx.Suffix*	Passage or Closet	Lever x Lever	F01	2.75″	$392	$415
G6130.xxx.Suffix*	Classroom	Lever x Lever	F05		$392	$415
G6310.xxx.Suffix*	Dormitory Entrance or Storeroom	Lever x Lever	F21	2.5″	$438	$462
G6318.xxx.Suffix*	Passage or Closet	Lever x Lever	F01	2.5″	$392	$415
G6355.xxx.Suffix*	Privacy, Bedroom or Bathroom	Lever x Lever	F19		$392	$415
G6360.xxx.Suffix*	Classroom, Entrance or Office	Lever x Lever	F04		$392	$415
G6365.xxx.Suffix*	Storeroom or Closet	Lever x Lever	F07		$392	$415
G6375.xxx.Suffix*	Entrance or Apartment	Lever x Lever	F12	2.5″	$438	$462
G6377.xxx.Suffix*	Entrance or Apartment	Lever x Lever	F20		$438	$462
G6385.xxx.Suffix*	Entrance or Public Restroom	Lever x Lever	F09	2.5″	$392	$415
G6330.xxx.Suffix*	Classroom	Lever x Lever	F05	2.5″	$392	$415
G6390.xxx.Suffix*	Store Door	Lever x Lever	F14	2.5″	$438	$462

Mortise Locks NOT available in Distressed finishes, non-distressed equivalents 402=102, 452=152

2.75″ backsets comes with the 1.25″ front.

2.5″ backsets comes with the 1.25″ front. Non-standard 1″ inch fronts are available for a 10% additional charge. To order non-standard front, add a '1' at the end of the Item #. ie 6802.112.R1 (except Reverse Bevel, LRB1, RRB1 and cannot apply to 2.75" backsets)

1.5″ and 2″ backsets comes with the 1″ front. Non-standard 1.25″ fronts are available for a 10% additional charge. To order non-standard front, add a '125' at the end of the Item #. ie 6802.112.R125 (except Reverse Bevel, LRB1, RRB1 and cannot apply to 2.75" backsets)

WARNING: DO NOT USE lever Strength mortise locks with knobs. They only turn one way and have a stiff turning action suitable for levers.

WHEN ORDERING CYLINDERS

All G-series light commercial mortise locks require a special cylinder.

Use the existing cylinder chart (back flap) for cylinder length, but add a suffix '.EMHT' to the end of the Item #.
(same price as standard C keyway cylinders)

EXAMPLE:
Lifetime Polished Brass 1.25″ cylinder for G-series mortise locks

8323.003.EMHT

NOTE: Emhart Cam can be purchase separately, see page 160.

Application:
Baldwin Architects/Designers and Dealer Network have requested the ability to utilize Baldwin Estate Trims in light-duty commercial projects (guest rooms, condominium).
The Baldwin G6000/G6300 line of Mortise Locks will provide this capability. All existing Baldwin lever by lever entrance and sectional set locksets are adaptable. Door Preparation: For use with metal doors and frames to be prepared in accordance with ANSI A 115.11.

Specification:
Grade 1: Meets/exceeds operational, security and cycle test requirements U/L: ANSI/UL 10B Listed 3 Hour Fire Rated – UL File No. R13846 Backsets: 2 ½ and 2 ¾ inch standard Other Sizes Available Case: Heavy Gage Plated Steel Armor Front: Wrought Brass, Bronze or S/S. Adjustable Bevel Option Latch Bolt: ¾"" Throw. Brass – Anti-Friction Type Dead Bolt: 1" Throw. Brass – with Harden Steel Inserts Reversibility: Most functions are field reversible. Factory sets handing to order.
Strikes: Flat standard, curved and long lip strikes available.

Other Specification:
3.437 in lever hub to cylinder center spacing note: designed to be used with existing Baldwin Estate Trim 7.2mm spindle on the diamond for use with Estate Levers

G6010 & G6310
Dormitory Entrance or Storeroom

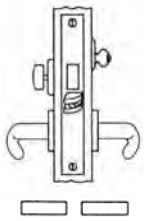

Latch bolt by handle either side. Deadbolt by key outside and thumbturn inside. Use of inside handle retracts latch and deadbolt simultaneously automatically unlocking outside handle.

FEDERAL SPECIFICATION EQUIVALENTS (FSE): ANSI Series: 1000-F21

G6055 & G6355
Privacy, Bedroom or Bathroom

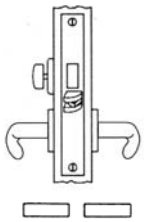

Latch bolt by handle either side. Deadbolt by thumbturn inside and emergency key outside. Use of inside handle retracts latch and dead bolt simultaneously - automatically unlocking outside handle.

FSE: ANSI Series: 1000-F19

G6090 & G6390
Storeroom

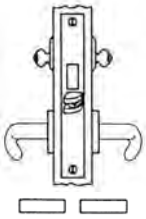

Latch bolt by handle inside and guest/master key outside. Outside handle always rigid. Deadbolt by thumbturn inside and service key only outside.

FSE: ANSI Series: 1000-F14

G6060 & G6360
Classroom, Entrance or Office

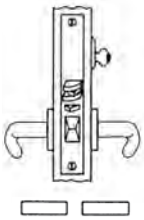

Latch bolt by key outside and handle either side unless outside handle is locked by key outside. Auxiliary latch deadlocks latch bolt.

FSE: ANSI Series: 1000-F04

GRADE 1 COMMERCIAL LOCKS FOR SURFACE MOUNTED TRIMS

G6065 & G6365
Storeroom or Closet

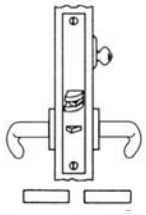

Latch bolt by handle inside and key outside. Outside handle always rigid. Auxiliary latch deadlocks latch bolt.

FSE: ANSI Series: 1000-F07

G6075 & G6375
Entrance or Apartment

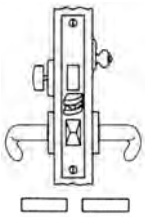

Latch bolt by key outside and handle either side unless outside handle is locked by toggle action stop. Deadbolt by key outside and thumbturn inside. Use of inside handle retracts latch and deadbolt. Outside handle remains locked.

FSE: ANSI Series: 1000-F12

G6085 & G6385
Entrance or Public Restroom

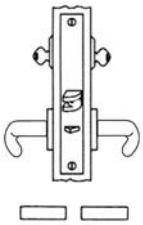

Latch bolt by handle either side unless outside handle is locked by master key from inside. When outside handle is locked, latch Bolt by key outside and handle inside. Auxiliary latch deadlocks latch bolt.

FSE: ANSI Series: 1000-F09

G6110 & G6318
Passage or Closet

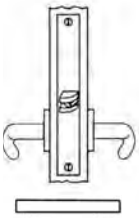

Latch bolt operated by handle either side at all times. Both handles always free.

FSE: ANSI Series: 1000-F01

G6130 & G6330
Classroom

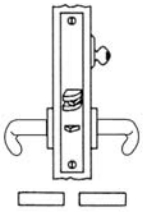

Latch bolt by key outside and handle either side unless outside handle is locked by key outside. Auxiliary latch deadlocks latch bolt.

FSE: ANSI Series: 1000-F05

G6377
Entrance or Apartment

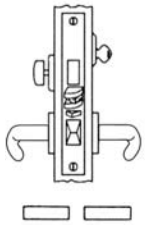

Latch bolt by key outside and handle either side unless outside handle is locked by toggle-action stop. Deadbolt by key outside and thumbturn inside. Use of inside handle retracts latch dead bolt simultaneously. Outside handle remains locked. Auxiliary latch dead locks latchbolt and prevents manipulation of locked toggle-action stop.

FSE: ANSI Series: 1000-F20

INTERIOR MORTISE LOCKS, SMALL CASE

List of available handling options	Suffix*
Right hand	.R
Left hand	.L

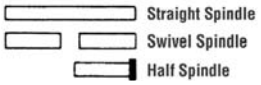

Spindle Key

Item #	Description		Backset	Wt.	003, 031, 033, 050 060, 102, 112 150, 151 152 190, 260, 264	044, 055, 056
8530.xxx.Suffix*	Interior Mortise Lock – Passage	Knob x Knob	2.5″	1.2	$187	$212
8535.xxx.Suffix*	Interior Mortise Lock – Passage	Lever x Lever	2.5″		$187	$212
8540.xxx.Suffix*	Interior Mortise Lock – Privacy	Knob x Knob	2.5″	1.5	$187	$212
8545.xxx.Suffix*	Interior Mortise Lock – Privacy	Lever x Lever	2.5″		$187	$212
8530.xxx.FSTR	T Strike for Small Case Mortise Locks				$30	$35

NOTE: 8530.xxx, 8535.xxx, 8540.xxx & 8545.xxx include a 3.5" spindle & offers 40° opening.
Mortise Locks NOT available in Distressed finishes, non-distressed equivalents 402=102, 452=152
>Specify handing with suffix*

PRIVACY FUNCTION: Latch bolt by knob either side. Deadbolt by turn piece inside and Emergency Key 0417 outside.
STEEL CASE: .625″ × 3.375″ × 3.75″ (16 × 86 × 95mm)
FRONT: .156″ × 1″ × 5.75″ (4 × 25 × 133mm). Adjustable for beveled conditions; finished to match.
LATCH BOLT: .5″ × .625″ (13 × 16mm) × .5″ (13mm) throw. Furnished in US4 and 26D finishes to match trim.
DEAD BOLT: .5″ × .75″ (13 × 19mm) × .5″ (13mm) throw. Furnished in US4 and 26D finishes to match trim.
HUB SIZE: .29″ (7mm). Broached on the diamond.
BACKSET: 2.5″ (64mm)
SPACING: Knob hub to turn piece: 2.25″ (57mm)
STRIKE: Specially-designed curved lip strike is fully reversible (non-handed); available in 1.25″ (32mm) Lip to Center dimension only.
DUST BOX: Box is furnished unattached; conceals installation marks and cutouts. (8530-000)
PACKED: One in a box with a strike, dust box, fasteners, and 3.5" spindle.

ORDERING INSTRUCTIONS: Locks are supplied as illustrated in left column.
To install locks as illustrated in right column, specify the OPPOSITE HAND OF THE DOOR.

INSTALLATION METHODS
Locks are reversible, may be installed in either position

8530.xxx

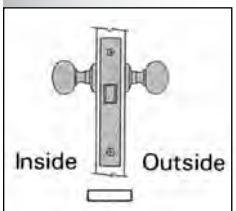

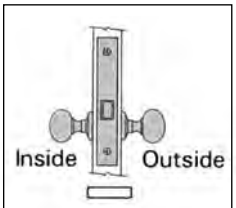

8535.xxx

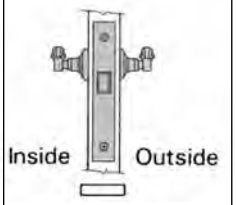

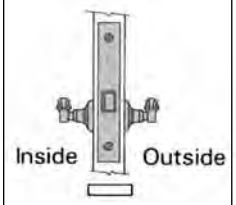

8540.xxx

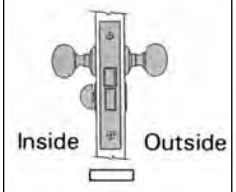

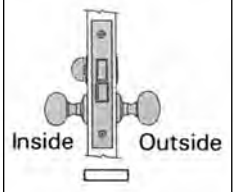

8545.xxx

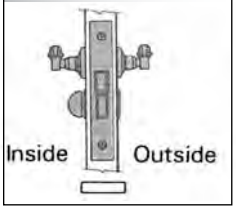

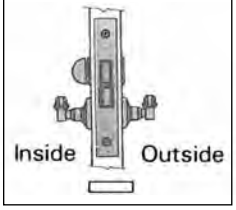

(Normal Installation) **(Reverse Installation, order opposite door handing)**

SMALL CASE MORTISE LOCK

>Quick and easy install on pre-prepared doors
>Heavy gauge steel case, solid forged brass interior working parts
>Completely reversible for all door conditions
>Turn Pieces and Emergency Release Trim must be ordered separately (NOT included in price of lock)
>Due to 2-1/4" spacing, not all Baldwin rosettes and ER trim will fit. To verify fit, add 1/2 height of rose & 1/2 height of ER trim, total cannot exceed 2.25".

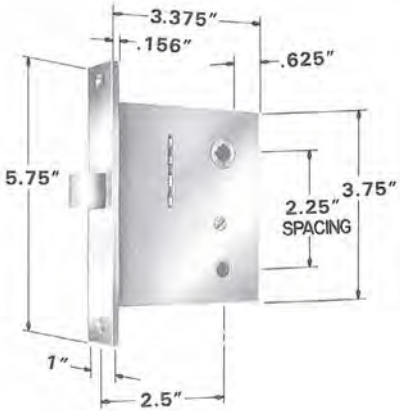

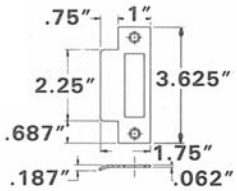

Strike

INTERIOR MORTISE LOCKS, HEAVY DUTY

List of available handling options	Suffix*
Right hand	.R
Left hand	.L
Right hand Reverse bevel	.RR
Left hand Reverse bevel	.LR
Right hand Lever Strength	.RLS
Left hand Lever Strength	.LLS
Right hand Reverse bevel Lever Strength	.RRLS
Left hand Reverse bevel Lever Strength	.LRLS
Right hand Reverse bevel Lever Strength with 1″ Front	.RRB1
Left hand Reverse bevel Lever Strength with 1″ Front	.LRB1

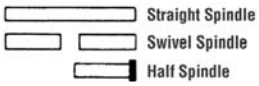

Spindle Key

Item #	Description		Backset	Wt.	Std. Strike	003, 031, 033, 050 060, 102, 112 150, 151 152 190, 260, 264	044, 055, 056
6010.xxx.Suffix*	Interior Mortise Lock – Entrance & Storeroom	Knob x Knob/Lever x Lever	2.75″	3.0	6040	$356	$380
6055.xxx.Suffix*	Interior Mortise Lock – Privacy	Knob x Knob/Lever x Lever	2.75″	2.8	6040	$356	$380
6060.xxx.Suffix*	Interior Mortise Lock – Corridor/Office	Knob x Knob/Lever x Lever	2.75″	2.8	6041	$356	$380
6065.xxx.Suffix*	Interior Mortise Lock – Emergency/Utility Room	Knob x Knob/Lever x Lever	2.75″	2.8	6041	$356	$380
6070.xxx.Suffix*	Interior Mortise Lock – Dormitory/Exit	Knob x Knob/Lever x Lever	2.75″	2.8	6040	$356	$380
6100.xxx.Suffix*	Interior Mortise Lock – Bath/Bedroom	Knob x Knob/Lever x Lever	2.75″	2.8	6040	$356	$380
6110.xxx.Suffix*	Interior Mortise Lock – Passage	Knob x Knob/Lever x Lever	2.75″	2.6	6041	$356	$380
6130.xxx.Suffix*	Interior Mortise Lock – Classroom	Knob x Knob/Lever x Lever	2.75″	2.8	6041	$356	$380
6315.xxx.Suffix*	Interior Mortise Lock – Bath/Bedroom	Knob x Knob/Lever x Lever	2.5″	xx	6340	$356	$380
6318.xxx.Suffix*	Interior Mortise Lock – Passage	Knob x Knob/Lever x Lever	2.5″	xx	6341	$356	$380
6845.xxx.Suffix*	Narrow Interior Mortise Lock – Bath/Bedroom	Lever x Lever	1.5″	xx	6340	$356	$380
6847.xxx.Suffix*	Narrow Interior Mortise Lock – Bath/Bedroom	Lever x Lever	2″	xx	6340	$356	$380
6855.xxx.Suffix*	Narrow Interior Mortise Lock – Passage	Lever x Lever	1.5″	xx	6341	$356	$380
6857.xxx.Suffix*	Narrow Interior Mortise Lock – Passage	Lever x Lever	2″	xx	6341	$356	$380
All Mortise Locks shown above Minus Strike (.DT)						$318	$340

Mortise Locks NOT available in Distressed finishes, non-distressed equivalents 402=102, 452=152

2.75″ backsets comes with the 1.25″ front.

2.5″ backsets comes with the 1.25″ front. Non-standard 1″ inch fronts are available for a 10% additional charge.

To order non-standard front, add a '1' at the end of the Item #. ie 6802.112.R1 (except Reverse Bevel, LRB1, RRB1 and cannot apply to 2.75" backsets)

1.5″ and 2″ backsets comes with the 1″ front. Non-standard 1.25″ fronts are available for a 10% additional charge.

To order non-standard front, add a '125' at the end of the Item #. ie 6802.112.R125 (except Reverse Bevel, LRB1, RRB1 and cannot apply to 2.75" backsets)

> Specify handing with Suffix* after finish designation (Suffix chart above left)

> Baldwin mortise locks are reversible in the field if needed

WARNING: DO NOT USE lever Strength mortise locks with knobs. They only turn one way and have a stiff turning action suitable for levers.

> 6010, 6060, 6065, and 6070 mortise locks are not available in 030 finish.

6010
Entrance And Storeroom

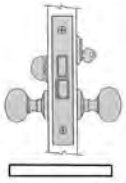

Latch bolt by knob either side. Deadbolt by key outside and turn piece inside. 1″ (25mm) throw Deadbolt with saw-proof inserts is standard equipment. When extended, Deadbolt deadlocks latch bolt.

FEDERAL SPECIFICATION EQUIVALENTS (FSE): ANSI Series: 1000-F21
NOTE: for single and double cylinder applications

6055
Privacy

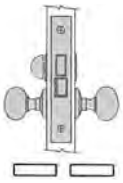

Latch bolt by knob either side. Deadbolt by turn piece inside and emergency key 0417 outside. Inside knob retracts latch and Deadbolt simultaneously, automatically unlocking outside knob. 1″ (25mm) throw Deadbolt with saw-proof inserts is standard equipment. When extended, Deadbolt deadlocks latch bolt.

FSE: ANSI Series: 1000-F19

6065
Emergency And Utility Room

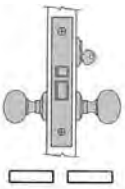

Auxiliary latch deadlocks latch bolt.
*Suggested for use with electric strike. Caution should be used to ensure that the electric strike being used properly engages the latch mechanism while depressing the auxiliary latch. We recommend solid latch bolt with this lock when used with an electric strike.

FSE: ANSI Series: 1000-F07
NOTE: For handle set applications, refer to Function 6066.

6060
Corridor And Office

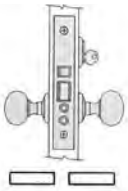

Latch bolt by knob from either side, except when outside knob is locked by stop in front, then by key outside and knob inside. Auxiliary latch deadlocks latch bolt.

FSE: ANSI Series: 1000-F04

6100, 6315 & 6845
Bathroom And Bedroom

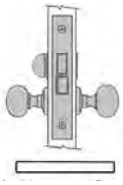

Latch bolt by knob either side. Deadbolt by turn piece inside and emergency key 0417 outside. 1″ (25mm) throw Deadbolt with saw-proof inserts is standard equipment. When extended, Deadbolt deadlocks latch bolt.

FSE: ANSI Series: 1000-F02

6070
Dormitory And Exit

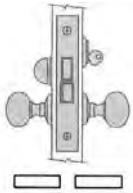

Latch bolt by knob either side. Deadbolt by key outside and turn piece inside. When Deadbolt is projected, latch bolt is deadlocked and outside knob is rigid. Inside knob retracts latch and Deadbolt simultaneously, automatically unlocking outside knob. 1″ (25mm) throw Deadbolt with saw-proof inserts is standard equipment. When extended, Deadbolt deadlocks latch bolt.

FSE: ANSI Series: 1000-F13

6110, 6318, 6855, & 6857
Passage

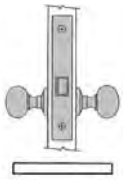

Latch bolt by knob either side.

FSE: ANSI Series: 1000-F01

6130
Classroom

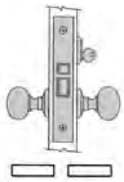

Latch bolt by knob either side, except when outside knob is locked by key outside, then by key outside. Inside knob is always free. Auxiliary latch deadlocks latch bolt.

FSE: ANSI Series: 1000-F05

DEADLOCKS

Single Cylinder

Function: Dead bolt by cylinder key from either side
Included: 8300 Cylinder Collar
Note: 6150, 6850 & 8550 may be used in double cylinder applications

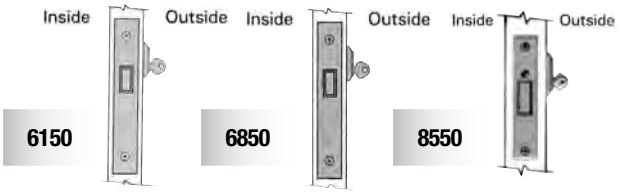

Item #	Description	Backset	Wt.	003, 031, 033, 050 060, 102, 112 150, 151 152 190, 260, 264	044, 055, 056
6150.xxx	Single Cylinder	2.75″	2.0	$322	$345
6160.xxx	Turn Piece/Cylinder	2.75″	2.3	$322	$345
6860.xxx	Turn Piece/Cylinder	1.5″	2.3	$322	$345
6850.xxx	Single Cylinder	1.5″	2.0	$322	$345
8550.xxx	Single Cylinder	2.5″	1.0	$205	$212
8555.xxx	Double Cylinder	2.5″	1.0	$205	$212
8560.xxx	Turn Piece/Cylinder	2.5″	1.0	$205	$212

Mortise Locks NOT available in Distressed finishes, non-distressed equivalents 402=102, 452=152

Double Cylinder

Function: Dead bolt by cylinder key from either side
Included: 8300 Cylinder Collar, 2 each

BACKSET:

2.75″ – for doors 1.75″ thick and over	**STEEL CASE**:	.875″ × 4″ × 5.5″ (22 × 102 × 140mm)
2.5″ – for doors 1.375″ thick and over, 1.375″ doors REQUIRE 1″ FRONT Adjustable for beveled conditions; finished to match.	**STEEL CASE**:	.75″ × 3.5″ × 5.5″ (19 × 89 × 140mm)
	FRONT:	0.156″ × 1″ × 5.75″ (4 × 25 × 133mm)
1.5″ (38mm) Narrow Backset – for doors 1.375″ thick and over	**STEEL CASE**:	1.5″ Backset: .75″ × 1.5″ × 5.5″ (19 × 64 × 140mm) 2.0″ Backset: .75″ × 3″ × 5.5″ (19 × 76 × 140mm)
	FRONT:*	0.218″ × 1″ × 8″ (6 × 25 × 203mm)

*Optional 1.25″ (32mm) front available

Turn Piece/Cylinder

Function: Dead bolt by cylinder key outside and turn piece inside
Included: 8300 Cylinder Collar & 6750 Turn Piece
Note: Other turn pieces and cylinder trim are available

> Heavy gauge steel case with solid forged brass working parts
> Completely reversible for all door conditions

DEADBOLT: .5″ × 1.25″ (13 × 32mm) × 1″ (25mm) throw with two saw-proof inserts.
STRIKE: Heavy gauge brass finished to match.
Furnished with two 3″ steel screws and a dust box standard (8530.000).
CYLINDER: Standard mortise type not included – must be purchased separately.
PACKED: One in a box. 8300 Cylinder Collar, 8530.000 Dust Box, and fasteners.

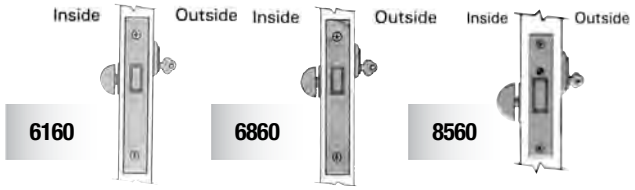

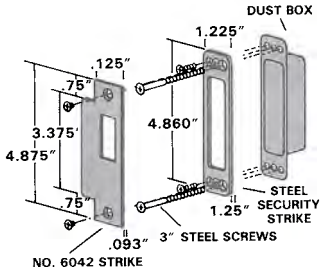

8550.xxx.STR – Strike

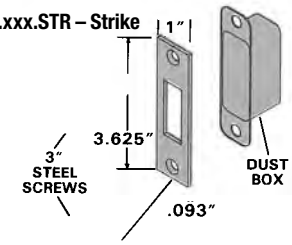

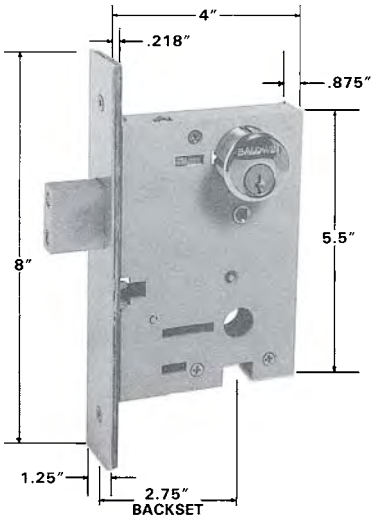

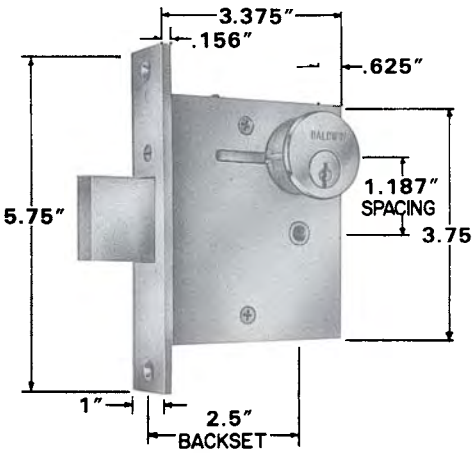

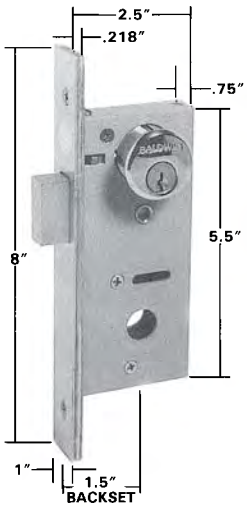

List of available handling options	Suffix*
Right hand	.R
Left hand	.L
Right hand Reverse bevel	.RR
Left hand Reverse bevel	.LR
Right hand Lever Strength	.RLS
Left hand Lever Strength	.LLS
Right hand Reverse bevel Lever Strength	.RRLS
Left hand Reverse bevel Lever Strength	.LRLS

Spindle Key

Item #	Description		Backset	Wt.	Std. Strike	003, 031, 033, 050 060, 102, 112 150, 151 152 190, 260, 264	044 055 056
6051.xxx.Suffix*	Fail Safe (power off unlocks outside knob)	Knob x Knob/Lever x Lever	2.75″	3.0	6041	$930	$953
6053.xxx.Suffix*	Fail Secure (power off locks outside knob)	Knob x Knob/Lever x Lever	2.75″	3.0	6041	$930	$953
All Mortise Locks shown above Minus Strike (.DT)						$900	$923

Mortise Locks NOT available in Distressed finishes, non-distressed equivalents 402=102, 452=152

> Specify handing with Suffix* after finish designation (Suffix chart above left)

> Baldwin mortise locks are reversible in the field if needed

WARNING: DO NOT USE lever Strength mortise locks with knobs. They only turn one way and have a stiff turning action suitable for levers.

6051 – Fail Safe

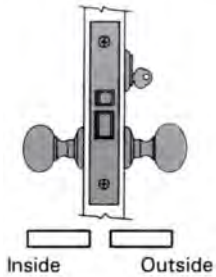

>Latch bolt by knob either side except when outside knob is locked by energizing solenoid.
>Key outside retracts latch bolt when solenoid is energized.
>Inside knob is always FREE.
>Auxiliary Latch deadlocks latch bolt.
>IMPORTANT: POWER OFF UNLOCKS OUTSIDE KNOB.

6053 – Fail Secure

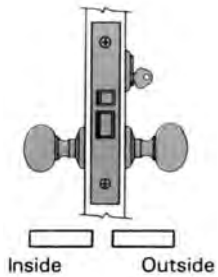

>Latch bolt by knob either side ONLY when solenoid is energized.
>Latch bolt retracted by key outside and knob inside when solenoid is NOT energized.
>Inside knob is always FREE.
>Auxiliary Latch deadlocks latch bolt.
>IMPORTANT: POWER OFF LOCKS OUTSIDE KNOB.

Mortise Electrical Specifications

RATED VOLTAGE: 24V AC/24V DC – AC/DC Converter is built inside.
OPERATING VOLTAGE RANGE: 22-26V AC/V DC
TEST VOLTAGE: 18V AC/V DC
RATED CURRENT: 0.35 Amperes (0.4 Amperes Maximum)
DUTY: Continuous
SOLENOID LEAD WIRE LENGTH: 6″(153mm)
IMPORTANT FEATURE: To facilitate installation, Solenoid is constructed inside the lock case.
IMPORTANT NOTES:

1.) Each electrified lock should have its own 24 volt transformer. Two or more locks may be operated in PARALLEL from a single transformer with the proper current rating. DO NOT connect locks in a series from a higher rated transformer.
2.) We DO NOT recommend wiring electrified locks to a circuit containing electromagnetic devices as transient voltage can cause damage to the lock. Transient voltage must be suppressed at its source before connecting locks to the circuit.
3.) A Varistor at 35 volts (peak-recurrent) may be used for transient voltage protection.
1-hole for latch bolt – Electric strike not available - must order 3rd party

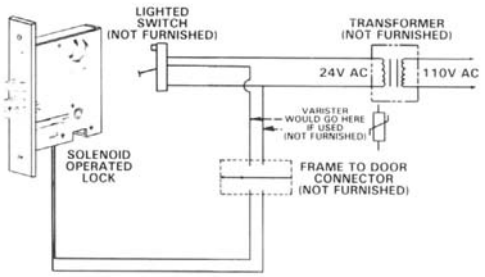

APPLICATIONS: Electrically-controlled locking devices are designed for specific security and fire safety installations including:

Security Controlled Entrances	Stairwell Doors
Apartment Buildings	Computer Rooms
Remote-controlled Security Doors	Hospital/Narcotic Areas
Fire Safety Alarms	Cashier Rooms

CONTROLLING/REGULATING DEVICES: Electrified locks can be locked or unlocked by the following means:

Toggle (Wall) Switch	Computerized Controls
Master Control Consoles	Access Card Readers
Automatic Time Devices	Smoke/Fire Alarms
Security Alarms	Thermo-Sensitive Devices

ENTRANCE MORTISE STRIKES

Specifications for all Entrance Strikes

THICKNESS: .093″ (2.3mm), brass material.

SCREWS: Furnished with 12 combination wood/machine screws, finished to match.

TEMPLATE: Designed to fit metal/wood frames prepared in accordance to ANSI A115.1/A115.11.

FEATURES: Furnished flat with rounded lip edges for universal use with left and right handed locks.

CURVED LIP: Available with a curved lip. Supplied standard with all locks incorporating a solid-type latch bolt. ALWAYS SPECIFY **HAND OF DOOR**. Example: 6340.XXX.R. Please see ordering instructions in this section.

ASA Strikes - Straight & Curved Lip

Residential Entrance, Emergency Egress

6040, 6340

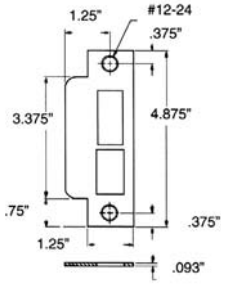

6041, 6341

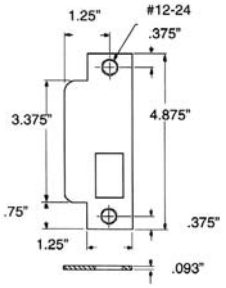

6043

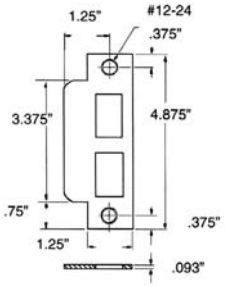

ASA Strikes – Straight Lip – 1.25″ Lip-to-Center

Item #	Function	003, 031, 033, 050 060, 102, 112 150, 151, 152 190, 260, 264	044 055, 056
6040.xxx	2.75″ backset latch, deadbolt	$35	$41
6041.xxx	2.75″ backset latch only	$35	$41
6043.xxx	2.75″ backset latch, deadbolt, aux latch	$35	$41
6340.xxx	1.5,″ 2,″ 2.5″ backset latch, deadbolt	$35	$41
6341.xxx	1.5,″ 2,″ 2.5″ backset latch only	$35	$41

ASA Strikes – Curved Lip – 1.25″ Lip-to-Center

Item #	Function		
6040.xxx.R (.L)	2.75″ backset latch, deadbolt	$35	$41
6041.xxx.R (.L)	2.75″ backset latch only	$35	$41
6043.xxx.R (.L)	2.75″ backset latch, deadbolt, aux latch	$35	$41
6340.xxx.R (.L)	1.5,″ 2,″ 2.5″ backset latch, deadbolt	$35	$41
6341.xxx.R (.L)	1.5,″ 2,″ 2.5″ backset latch only	$35	$41

Curved lip strikes are handed – order same hand as door (.R or .L)

6044.xxx, 6340.xxx – LATCH/DEADBOLT FUNCTION

>Supplied standard with all locks
>Anti-friction latch bolt

6040 – Use with locks incorporating a .625″ (16mm) wide latch bolt (6000 Series)
6340 – Use with locks incorporating a .5″ (13mm) wide latch bolt. (6300 Series and 6800 Series locks)

6041.xxx, 6341.xxx – LATCH BOLT FUNCTION

6041 – Use with locks incorporating .625″ (16mm) wide latch bolt (6000 Series)
6341 – Use with locks incorporating .5″ (13mm) wide latch bolt.
(6300 Series and 6800 Series locks)

6043.xxx – LATCH/AUXILIARY LATCH/DEADBOLT FUNCTION

Use with lock functions incorporating a latch, auxiliary latch, and deadbolt
Available for 6000 Series locks only

ASA Strikes - Extended Lip

6037, 6038, 6039
6338, 6339

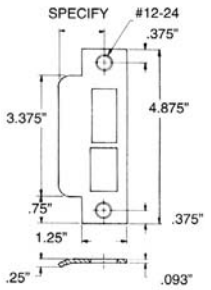

Item #	Function	003, 031, 033, 050 060, 102, 112 150, 151, 152 190, 260, 264	044 055, 056
6037.xxx.XXXX	2.75″ backset latch, deadbolt, aux latch	$76	$82
6038.xxx.XXXX	2.75″ backset latch only	$76	$82
6039.xxx.XXXX	2.75″ backset latch, deadbolt	$76	$82
6338.xxx.XXXX	1.5,″ 2,″ 2.5″ backset latch only	$76	$82
6339.xxx.XXXX	1.5,″ 2,″ 2.5″ backset latch, deadbolt	$76	$82

.XXXX indicates Extended Lip to Center size = .R158, .L158, .R178, .L178, .R214, .L214, .R300, .L300

6037, 6038, 6039, 6338, 6339.xxx – EXTENDED LIP STRIKES (HANDED)

>Use with locks installed on special door/frame conditions
>Supplied with a curved lip only
>ALWAYS SPECIFY HAND OF DOOR AND REQUIRED LENGTH
>Note: Reverse bevel doors use opposite hand for strike selection (ie. Right hand reverse bevel use left hand strike.)
>Lip to Center lengths:
.R158 or .L158 – 1.625″ (41mm)
.R178 or .L178 – 1.875″ (48mm)
.R214 or .L214 – 2.25″ (57mm)
.R300 or .L300 – 3″ (76mm)

Lip to Center length determined by the following formula:
Door thickness ÷ 2 + .375″ (10mm) = Lip to Center length
Round to closest size

***Strikes NOT available in Distressed finishes, non-distressed equivalents 402=102, 452=152**

STRIKES & ARMORED FRONTS

Deadlock Strike & Dust Box

6042

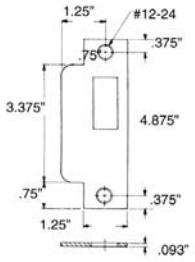

6001

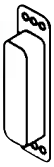

Deadlock Strike

Item #	Function	003, 031, 033, 050 060, 102, 112 150, 151, 152 190, 260, 264	044 055, 056
6042.xxx	Deadlock function strike for 6000 & 6800 only	$35	$41

>Use with lock functions incorporating a deadbolt
>Available for 6000 Series and 6800 Series locks only

DUST BOX

Item #	Description	
6001.000	Dust Box (included with all Mortise Locks)	$6

>Designed to conceal installation cut-outs and marks behind strikes.
Box measures 1˝-(25mm) deep for use with all lock functions and strikes.
>Furnished standard with all mortise locks illustrated within this section.

Rabbeted Door Strike

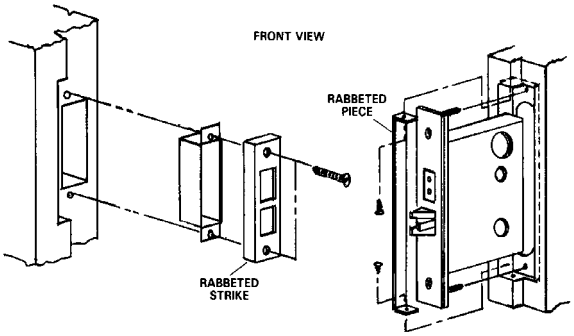

Item #	Function	003, 031, 033, 050 060, 102, 112 150, 151, 152 190, 260, 264	044 055, 056
6897.xxx	1.5˝, 2˝, 2.5˝ backset, RABBETED strike	$123	$129

Used with all 1.5˝ (38mm), 2˝ (51mm), 2.5˝ (64mm) backset locks (6300, 6800 Series)

FEATURES: Rabbeted strikes and pieces are used on pairs of doors that have a meeting rail which is rabbeted or on single doors that have a rabbeted frame. The strike is designed to fit in a .5˝ (13mm) rabbet; a separate rabbeted piece conforms to the face of the lock. This rabbeted assembly is available for locks with 1.25˝ (32mm) wide fronts only.

SIZES: Strike 1˝ × 5˝ (25 × 127mm) (Non-Handed); Rabbeted Piece: .5˝ × 8˝ (13 × 203mm)

IMPORTANT NOTES:

1. RABBETED STRIKE AND PIECE ARE ONLY AVAILABLE FOR 1.75˝ (44mm) DOORS.
2. When a rabbeted strike is ordered in conjunction with a keyed function lock, a steel security strike is NOT supplied.

PACKED: One complete set in a box with appropriate fasteners.

ORDERING INSTRUCTIONS: 6897 — Used with all 1.5˝ (38mm), 2˝ (51mm), 2.5˝ (64mm) backset locks (6300, 6800 Series). All locks which are furnished standard with a 1˝ (25mm) wide front must be ordered with a 1.25˝ (32mm) wide front.

NOT AVAILABLE for 2.75˝ backset locks

Armored Fronts

6000 Series

1.25˝

>For use on 6000 Series Locks (2.75˝ backset only)
>1.25˝ (32mm) wide front and .625˝ (16mm) wide latch bolt

1.25˝ (32mm)

6010.xxx.0004	Latch/Deadbolt
6021.xxx.0004	Latch/Deadbolt/Stops
6060.xxx.0004	Latch/Auxiliary Latch/Stops
6065.xxx.0004	Latch/Auxiliary Latch
6080.xxx.0004	Latch/Auxiliary Latch/Deadbolt/Stops
6091.xxx.0004	Latch/Auxiliary Latch/Deadbolt
6110.xxx.0004	Latch
6150.xxx.0004	Deadbolt

6300 Series

1˝ 1.25˝

>For use on 6300 Series Locks (2.5˝ backset only)
>1.25˝ (32mm) wide front and .5˝ (13mm) wide latch bolt

1.25˝ (32mm)

6301.xxx.0004	Latch/Deadbolt/Stops
6310.xxx.0004	Latch/Deadbolt
6318.xxx.0004	Latch

1˝ (25mm)

6301.xxx.0084	Latch/Deadbolt/Stops
6310.xxx.0084	Latch/Deadbolt
6318.xxx.0084	Latch

6800 Series

1˝ 1.25˝

>For use on 6800-6802 Series Locks (1.5˝ and 2˝ backset)
>1.25˝ (32mm) wide front and .5˝ (13mm) wide latch bolt

1.25˝ (32mm)

6150.xxx.0004	Deadbolt
6800.xxx.0004	Latch/Deadbolt/Stops
6810.xxx.0004	Latch/Dead Bolt
6855.xxx.0004	Latch

1˝ (25mm)

6150.xxx.0084	Deadbolt
6800.xxx.0084	Latch/Deadbolt/Stops
6810.xxx.0084	Latch/Deadbolt
6855.xxx.0084	Latch

Armored Fronts

Removable armored fronts protect the lock against tampering of the cylinder yoke assembly. Available in all matching finishes of mortise locks.

ORDERING INSTRUCTIONS: Specify part number indicated below and finish required.

1.25˝ Armored Fronts – standard for 2.5˝ & 2.75˝ backset mortise locks

Item #	Function	003, 031, 033, 050 060, 102, 112 150, 151, 152 190, 260, 264	044 055, 056
6010.xxx.0004	Latch/Deadbolt	$35	$41
6021.xxx.0004	Latch/Deadbolt/Stops	$35	$41
6060.xxx.0004	Latch/Auxiliary Latch/Stops	$35	$41
6065.xxx.0004	Latch/Auxiliary Latch	$35	$41
6080.xxx.0004	Latch/Auxiliary Latch/Deadbolt/Stops	$35	$41
6091.xxx.0004	Latch/Auxiliary Latch/Deadbolt	$35	$41
6110.xxx.0004	Latch	$35	$41
6150.xxx.0004	Deadbolt	$35	$41
6301.xxx.0004	Latch/Deadbolt/Stops	$35	$41
6310.xxx.0004	Latch/Deadbolt	$35	$41
6318.xxx.0004	Latch	$35	$41
6800.xxx.0004	Latch/Deadbolt/Stops	$35	$41
6810.xxx.0004	Latch/Deadbolt	$35	$41
6855.xxx.0004	Latch	$35	$41

1˝ Armored Fronts – standard for 1.5˝ & 2˝ backset mortise locks

Item #	Function		
6301.xxx.0084	Latch/Deadbolt/Stops	$35	$41
6310.xxx.0084	Latch/Deadbolt	$35	$41
6318.xxx.0084	Latch	$35	$41
6150.xxx.0084	Deadbolt	$35	$41
6800.xxx.0084	Latch/Deadbolt/Stops	$35	$41
6810.xxx.0084	Latch/Deadbolt	$35	$41
6855.xxx.0084	Latch	$35	$41

***Strikes NOT available in Distressed finishes, non-distressed equivalents 402=102, 452=152**

LOCK TRIM THICKNESS INDEX

A - .0625″ (1.5mm)
6755 - Cylinder Collar

B - .0937″ (2.4mm)
6511 - Escutcheon
6540 - San Diego
6543 - Lancaster
6555 - Boston
6557 - Richmond
6563 - Chicago
6565 - Monterey
6642 - Escutcheon
6763 - Escutcheon
6774 - Escutcheon
6797 - Escutcheon
6931 - Dallas
6940 - Denver

C - .125″ (3mm)
6541 - San Francisco
6547 - Nashville
6768 - Cylinder Collar
6793 - Escutcheon
6922 - Lakewood
6933 - Versailles
6938 - Mobile
6942 - Bismark
6975 - Escutcheon
6980 - Escutcheon
6986 - Escutcheon
6993 - Escutcheon
6996 - Escutcheon

D - .1875″ (5mm)
6508 - Escutcheon
6551 - Reading
6552 - Baltimore
6567 - Trenton
6765 - Escutcheon
6767 - Escutcheon
6948 - Victoria
8300 - Cylinder Collar (1/8″ Adj.)

E - .25″ (6mm)
6503 - Escutcheon
6504 - Escutcheon
6548 - Detroit
6554 - Barclay
6562 - New York
6571 - Concord
6737 - Cylinder Collar
6794 - Escutcheon
6939 - Bristol Lever Set
6991 - Escutcheon
8300 - Cylinder Collar (1/16″ Adj.)

F - .3125″ (8mm)
6546 - Wilmington
6549 - Williamsburg (Sgl Cyl)
6550 - Georgetown (Sgl Cyl)
6560 - Lexington
6573 - Springfield
6754 - Cylinder Collar
6757 - Cylinder Collar
6790 - Escutcheon
6795 - Escutcheon
6798 - Escutcheon
6950 - Kensington
6961 - Westminster
8300 - Cylinder Collar (No Adj.)

G - .375″ (10mm)
6570 - Atlanta
6915 - Santa Monica
6944 - Pasadena
6738, 6739, 6743
6963 - Bristol Handle Set
6966 - Lakeshore Handleset
6974 - Lakeshore Entrance Set
6976 – Minneapolis
6946 – Hollywood Hills

H - .435″ (11mm)
6915 - Santa Monica
6952 - Edinburgh
6962 - Fenwick
6973 - Houston Entrance Set
6999 - Richland

H1 - .53″ (12mm)
M502 - Cody ¾ escutcheon
M504 - Cody full escutcheon
M512 - Boulder ¾ escutcheon
M514 - Boulder full escutcheon
M516 - Soho ¾ escutcheon
M522 - Bethpage
6920 - Palm Springs 3/4 escutcheon
6921 - Palm Spring full escutcheon

I - .5625″ (14mm)
6515 - Oval Edinburgh (Mortise)
6520 - Bristol (Mortise)
6516 - Oval Edinburgh (Mortise)
6526 - Kensington (Mortise)

J - .75″ (18mm)
6542 - Tremont
6544 - Hamilton
6791 - Escutcheon
6951 - Stanford

K - .875″ (22mm)
6505 - Box Escutcheon (Dbl. Cyl. Only)
6549 - Williamsburg (Dbl. Cyl. Only)
6550 - Georgetown (Dbl. Cyl. Only)

6503 - Escutcheon	.25″	E
6504 - Escutcheon	.25″	E
6505 - Box Escutcheon	.875″	K
6508 - Escutcheon	.1875″	D
6511 - Escutcheon	.09″	B
6513 - Escutcheon	.375″	G
6515 - Oval Edinburgh (Mort)	.5625″	I
6516 - Oval Edinburgh (Mort)	.5625″	I
6520 - Bristol (Mort)	.5625″	I
6526 - Kensington (Mort)	.5625″	I
6540 - San Diego	.09″	B
6541 - San Francisco	.125″	C
6542 - Tremont	.75″	J
6543 - Lancaster	.09″	B
6544 - Hamilton	.75″	J
6546 - Wilmington	.3125″	F
6547 - Nashville	.125″	C
6548 - Detroit	.25″	E
6549 - Williamsburg	.3125″	F
6549 - Williamsburg	.875″	K
6513 - Escutcheon	.375″	G
6550 - Georgetown	.3125″	F
6550 - Georgetown	.875″	K
6551 - Reading	.1875″	D
6552 - Baltimore	.1875″	D
6554 - Barclay	.25″	E
6555 - Boston	.09″	B
6557 - Richmond	.09″	B
6560 - Lexington	.3125″	F
6562 - New York	.25″	E
6563 - Chicago	.09″	B
6565 - Monterey	.09″	B
6567 - Trenton	.1875″	D
6570 - Atlanta	.375″	G
6571 - Concord	.25″	E
6573 - Springfield	.3125″	F
6641 - Pasadena	.375″	G
6642 - Escutcheon	.09″	B
6737 - Cylinder Collar	.25″	E
6738 - Cylinder Collar	.375″	G
6739 - Cylinder Collar	.375″	G
6743 - Cylinder Collar	.375″	G
6754 - Cylinder Collar	.3125″	F
6755 - Cylinder Collar	.625″	A
6757 - Cylinder Collar	.3125″	F
6763 - Escutcheon	.09″	B
6765 - Escutcheon	.1875″	D
6767 - Escutcheon	.1875″	D
6768 - Cylinder Collar	.125″	C
6774 - Escutcheon	.09″	B
6790 - Escutcheon	.3125″	F
6791 - Escutcheon	.75″	J
6793 - Escutcheon	.125″	C
6794 - Escutcheon	.25″	E
6795 - Escutcheon	.3125″	F
6797 - Escutcheon	.09″	B
6798 - Escutcheon	.3125″	F
6915 - Santa Monica	.435″	H
6920 - Palm Springs	.57	H1
6921 - Palm Springs	.57	H1
6922 - Lakewood	.125″	C
6931 - Dallas	.09″	B
6933 - Versailles	.125″	C
6938 - Mobile	.125″	C
6939 - Bristol Lever Set	.25″	E
6940 - Denver	.09″	B
6942 - Bismark	.125″	C
6944 - Pasadena	.435″	G
6946 - Hollywood Hills	.375″	G
6948 - Victoria	.1875″	D
6950 - Kensington	.3125″	F
6951 - Stanford	.75″	J
6952 - Edinburgh	.435″	H
6961 - Westminster	.3125″	F
6962 - Fenwick	.435″	H
6963 - Bristol Handle Set	.375″	G
6966 - Lakeshore Handleset	.375″	G
6973 - Houston Entrance Set	.435″	H
6974 - Lakeshore Entrance	.375″	G
6975 - Escutcheon	.125″	C
6976 – Minneapolis	.375″	G
6980 - Escutcheon	.125″	C
6986 - Escutcheon	.125″	C
6988 - Escutcheon	.09″	B
6991 - Escutcheon	.25″	E
6993 - Escutcheon	.125″	C
6996 - Escutcheon	.125″	C
6999 - Richland	.435″	H
8300 - Cylinder Collar	.1875″	D
8300 - Cylinder Collar	.25″	E
8300 - Cylinder Collar	.3125″	F
M502 - Cody ¾ escutcheon	.54″	H1
M504 - Cody full escutcheon	.54″	H1
M512 - Boulder ¾ escutcheon	.54″	H1
M514 - Boulder full escutcheon	.54″	H1
M516 - Soho ¾ escutcheon	.54″	H1
M522 - Bethpage	.54″	H1

DECIMAL FRACTION CHART

FRACTION	DECIMAL
1/16″	.0625″
1/8″	.125″
3/16″	.1875″
1/4″	.25″
5/16″	.3125″
3/8″	.375″
7/16″	.4375″
1/2″	.5″
9/16″	.5625″
5/8″	.625″
11/16″	.6875″
3/4″	.75″
13/16″	.8125″
7/8″	.875″

MORTISE LOCKS

***Cylinders NOT available in Distressed finishes, non-distressed equivalents: 402=102, 452=152**

C KEYWAY TABLE

Single Cylinder – C Keyway

Door Thickness	1.375″		1.75″		2″		2.25″		2.5″	
Lock Trim Thickness	Cylinder Length	Blocking Ring	Cylinder Length	Blocking Ring	Cylinder Length	Blocking Ring	Cylinder Length	Blocking Ring	Cylinder Length	Blocking Ring
A – .0625″	1″ 8321.xxx	.1875″ 8440.xxx.5	1″ 8321.xxx	—	1.125″ 8322.xxx	—	1.25″ 8323.xxx	—	1.375″ 8324.xxx	—
B – .0937″	1″ 8321.xxx	.1562″ 8440.xxx.4	1″ 8321.xxx	—	1.125″ 8322.xxx	—	1.25″ 8323.xxx	—	1.375″ 8324.xxx	—
C – .125″	1″ 8321.xxx	.125″ 8440.xxx.3	1.125″ 8322.xxx	—	1.125″ 8322.xxx	—	1.25″ 8323.xxx	—	1.375″ 8324.xxx	—
D – .1875″	1″ 8321.xxx	—	1.125″ 8322.xxx	—	1.25″ 8323.xxx	—	1.375″ 8324.xxx	—	1.5″ 8325.xxx	—
E – .25″	1″ 8321.xxx	—	1.25″ 8323.xxx	—	1.25″ 8323.xxx	—	1.375″ 8324.xxx	—	1.5″ 8325.xxx	—
F – .3125″	1.125″ 8322.xxx	—	1.25″ 8323.xxx	—	1.375″ 8324.xxx	—	1.5″ 8325.xxx	—	1.625″ 8326.xxx	—
G – .375″	1.125″ 8322.xxx	—	1.25″ 8323.xxx	—	1.375″ 8324.xxx	—	1.5″ 8325.xxx	—	1.625″ 8326.xxx	—
H – .435″	1.125″ 8322.xxx	—	1.375″ 8324.xxx	—	1.5″ 8325.xxx	—	1.625″ 8326.xxx	—	1.75″ 8327.xxx	—
H1 – .53″	1.125″ 8322.xxx	—	1.5″ 8325.xxx	—	1.625″ 8326.xxx	—	1.75″ 8327.xxx	—	1.75″ 8327.xxx	—
I – .56″	1.125″ 8322.xxx	—	1.5″ 8325.xxx	—	1.625″ 8326.xxx	—	1.75″ 8327.xxx	—	1.75″ 8327.xxx	—
J – .75″	1.5″ 8325.xxx	—	1.625″ 8326.xxx	—	1.75″ 8327.xxx	—	2″ 8328.xxx	.125″ 8440.xxx.3	2″ 8328.xxx	—

Item #	Description		003, 031, 033, 050 060, 102, 112 150, 151, 152 190, 260, 264	044 055 056
8321.xxx	1″	Mortise Cyl.	$65	$71
8322.xxx	1.125″	Mortise Cyl.	$65	$71
8323.xxx	1.25″	Mortise Cyl.	$65	$71
8324.xxx	1.375″	Mortise Cyl.	$65	$71
8325.xxx	1.5″	Mortise Cyl.	$65	$71
8326.xxx	1.625″	Mortise Cyl.	$135	$141
8327.xxx	1.75″	Mortise Cyl.	$135	$141
8328.xxx	2″	Mortise Cyl.	$135	$141
8329.xxx	2.25″	Mortise Cyl.	$135	$141
8330.xxx	2.5″	Mortise Cyl.	$135	$141

NOTE:
Hotel function cylinders: add "H" to end. $25 list Adder.
When ordering cylinders for **G-SERIES MORTISE LOCKS,** use this chart, but add a suffix '.EMHT' to the end of the Item #. (same price as standard C keyway cylinders)

EXAMPLE:
Lifetime Polished Brass 1.25″ cylinder for G-series mortise
8323.003.EMHT

8321-8330

MORTISE LOCKS

Double Cylinder - C Keyway

Door Thickness	1.375″		1.75″		2″		2.25″		2.5″	
Lock Trim Thickness	Cylinder Length	Blocking Ring	Cylinder Length	Blocking Ring	Cylinder Length	Blocking Ring	Cylinder Length	Blocking Ring	Cylinder Length	Blocking Ring
A – .0625″	1″ 8321.xxx.DBL	.2812″+ 8440.xxx.2&5	1″ 8321.xxx.DBL	.0937″+ 8440.xxx.2	1″ 8321.xxx.DBL	—	1.125″ 8322.xxx.DBL	—	1.25″ 8323.xxx.DBL	—
B – .0937″	1″ 8321.xxx.DBL	.25″+ 8440.xxx.6	1″ 8321.xxx.DBL	.125″ 8440.xxx.3	1″ 8321.xxx.DBL	—	1.125″ 8322.xxx.DBL	—	1.25″ 8323.xxx.DBL	—
C – .125″	1″ 8321.xxx.DBL	.25″+ 8440.xxx.6	1″ 8321.xxx.DBL	.0625″ 8440.xxx.1	1.125″ 8322.xxx.DBL	.0625″ 8440.xxx.1	1.25″ 8323.xxx.DBL	.0625″ 8440.xxx.1	1.375″ 8324.xxx.DBL	.0625″ 8440.xxx.1
D – .1875″	1″ 8321.xxx.DBL	.1562″+ 8440.xxx.4	1.125″ 8322.xxx.DBL	.0937″+ 8440.xxx.2	1.125″ 8322.xxx.DBL	—	1.25″ 8323.xxx.DBL	—	1.375″ 8324.xxx.DBL	—
E – .25″	1″ 8321.xxx.DBL	.0937″+ 8440.xxx.2	1.125″ 8322.xxx.DBL	.0625″ 8440.xxx.1	1.25″ 8323.xxx.DBL	.0625″ 8440.xxx.1	1.375″ 8324.xxx.DBL	.0625″ 8440.xxx.1	1.5″ 8325.xxx.DBL	.0625″ 8440.xxx.1
F – .3125″	1″ 8321.xxx.DBL	.0625″ 8440.xxx.1	1.25″ 8323.xxx.DBL	.0937″+ 8440.xxx.2	1.25″ 8323.xxx.DBL	—	1.375″ 8324.xxx.DBL	—	1.5″ 8325.xxx.DBL	—
G – .375″	1″ 8321.xxx.DBL	—	1.25″ 8323.xxx.DBL	.0625″ 8440.xxx.1	1.375″ 8324.xxx.DBL	.0625″ 8440.xxx.1	1.5″ 8325.xxx.DBL	.0625″ 8440.xxx.1	1.625″ 8326.xxx.DBL	.0625″ 8440.xxx.1
H – .435″	1″ 8321.xxx.DBL	—	1.25″ 8323.xxx.DBL	—	1.375″ 8324.xxx.DBL	—	1.5″ 8325.xxx.DBL	—	1.625″ 8326.xxx.DBL	—
H1 – .53″	1.125″ 8322.xxx	—	1.375″ 8324.xxx.DBL	—	1.5″ 8325.xxx.DBL	.0625″ 8440.xxx.1	1.625″ 8326.xxx.DBL	—	1.75″ 8327.xxx.DBL	—
I – .5625″	1.125″ 8322.xxx.DBL	—	1.375″ 8324.xxx.DBL	—	1.5″ 8325.xxx.DBL	—	1.625″ 8326.xxx.DBL	—	1.75″ 8327.xxx.DBL	—
J – .75″	1.5″ 8325.xxx.DBL	.0937″+ 8440.xxx.2	1.625″ 8326.xxx.DBL	.0625″ 8440.xxx.1	1.75″ 8327.xxx.DBL	.0625″ 8440.xxx.1	2″ 8328.xxx.DBL	.1562″+ 8440.xxx.4	2″ 8328.xxx.DBL	.0625″ 8440.xxx.1
F – .3125″ Exterior	1″ 8321.xxx	—	1.125″ 8322.xxx	—	1.25″ 8323.xxx	—	1.375″ 8324.xxx	—	1.5″ 8325.xxx	—
K – .875″ Exterior	1.5″ 8325.xxx	—	1.75″ 8327.xxx	—	2″ 8328.xxx	.125″ 8440.xxx.3	2″ 8328.xxx	—	2.25″ 8329.xxx	.125″ 440.xxx.3

Item #	Description		003, 031, 033 050, 060 102, 112 150, 151 152, 190 260, 264	044 055 056
8321.xxx.DBL	1″	Double Cyl.	$129	$141
8322.xxx.DBL	1.125″	Double Cyl.	$129	$141
8323.xxx.DBL	1.25″	Double Cyl.	$129	$141
8324.xxx.DBL	1.375″	Double Cyl.	$129	$141
8325.xxx.DBL	1.5″	Double Cyl.	$129	$141
8326.xxx.DBL	1.625″	Mortise Cyl.	$269	$281
8327.xxx.DBL	1.75″	Mortise Cyl.	$269	$281
8328.xxx.DBL	2″	Mortise Cyl.	$269	$281
8329.xxx.DBL	2.25″	Mortise Cyl.	$269	$281
8330.xxx.DBL	2.5″	Mortise Cyl.	$269	$281

Blocking Rings

Item #	Description	003, 031, 033 050, 060 102, 112 150, 151 152, 190 260, 264	044 055 056
8440.xxx.001	.0625″ – 1/16″ B.R.	$18	$25
8440.xxx.002	.0937″ – 3/32″ B.R.	$18	$25
8440.xxx.003	.125″ – 1/8″ B.R.	$18	$25
8440.xxx.004	.1562″ – 5/32″ B.R.	$18	$25
8440.xxx.005	.1875″ – 3/16″ B.R.	$18	$25
8440.xxx.006	.25″ – 1/4″ B.R.	$18	$25

8440

+ Two Blocking Rings Required

***QUICK SHIP** is available in **limited functions and finishes.**
For complete listing, please refer to page 272.

***Cylinders NOT available in Distressed finishes, non-distressed equivalents: 402=102, 452=152**

ACCESSORIES

Cams for Mortise Cylinders

Item #	Description	Finish	Price
8300.509.AR	Adams Rite Cam	009	$9
8300.509.EMHT	Emhart Cam	009	$9
8300.509.STD	Standard Cam	009	$9
8313.329.TPH1	Rim Cylinder Tailpiece – 2.2188″ (56mm)	—	$9
8313.329.TPH2	Rim Cylinder Tailpiece – 3.1875″ (81mm)	—	$9

Adams Rite Cam

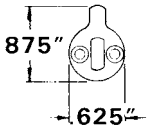

ADAMS RITE CAM
Thickness: .0625″ (2mm)
For Adams Rite Series 1800, 4093, 4500.

Emhart Cam

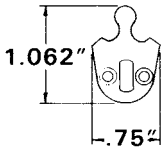

EMHART CAM
Thickness: .0625″ (2mm)
For use with Emhart Mortise type locks.

Standard Cam

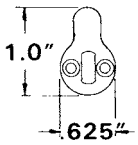

STANDARD CAM
Thickness: .0625″ (2mm)
For use with most manufacturers of Mortise type locks.

Rim Cylinder Tailpiece

Tailpiece Bars For Rim Cylinders
Horizontal
8313.329.TPH1 – 2.2188″ (56mm)
8313.329.TPH2 – 3.1875″ (81mm)

Residential Trim Marking Template

Item #	Description	Price
8498.000	Residential trim marking template – 2.75″ doors	$61

Features: To eliminate face drilling errors with Residential Trim shown in this section, Baldwin offers an economical metal template to ensure precision hole alignment. The template is designed to easily slide over a 1.75″ (44mm) door and engages into the mortise cutout. The hole positions mark the center of the specific bore locations. Before marking hole positions, ALWAYS check to verify that metal template is square to mortise cutout. Mark hole locations accordingly and remove template.

Mortise Lock Turn Piece Cylinders

Item #	Description	003, 031, 033, 050 060, 102, 112 150, 151, 152 190, 260, 264	044 055, 056
8441.xxx	1″ Turn Knob Cylinder	$129	$135
8442.xxx	1.125″ Turn Knob Cylinder	$129	$135
8443.xxx	1.25″ Turn Knob Cylinder	$129	$135
8444.xxx	1.625″ Turn Knob Cylinder	$129	$135

Mortise Lock Turn Piece Cylinders

Features: Used for specific conditions when operation by turn piece is required in place of a key. Available only with 6720 T-knob attached. Not handed.

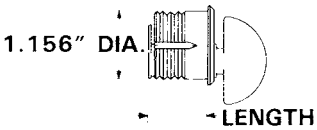

CYLINDER TRIM

Cylinder Trim
Cylinder Not Included

Item #	Description	003, 031, 033, 050 060, 102, 112 150, 151, 152 190, 260, 264	044, 055, 056, 402, 452
6737.xxx	Square Cylinder Collar	$53	$59
6738.xxx	Contemporary Round Collar	$53	$59
6739.xxx	Lakeshore Cylinder Collar	$53	$59
6743.xxx	Contemporary Square Collar	$53	$59
6754.xxx	Oval Cylinder Collar	$53	$59
6757.xxx	Colonial Cylinder Collar	$53	$59
6761.xxx	Dummy Cylinder	$53	$59
6768.xxx	Beaded Cylinder Collar	$53	$59
6755.xxx	Cylinder Lock Cover Plate	$112	$118
8300.xxx	Compression Cylinder Collar	$21	$28
8314.xxx	Wrought Cylinder Collar**	$18	$25

**8300 & 8314 NOT available in Distressed finishes

NOTE: Cylinder collars are only for mortise cylinders and will not work on tubular deadbolts.

6737

2.5″ × 2.5″ x .25″ projection – E (64 × 64mm)

6738

1.75″ dia. x .375″ projection – G

6739

1.9″ x 1.9″ x .375″ projection – G

6743

2.0″ x 2.0″ x .375″ projection – G

6754

1.687″ × 3″ x .3125″ projection – F (43 × 76mm)

6757

1.75″ projection - F (44mm) dia.

6761

For use with escutcheons and sectional trim for symmetrical appearance on pairs of doors.

6768

1.75″ projection - C (44mm) dia.

6755

1.625″ × 2.375″ x .3125″ projection – A (41 × 60mm)
NOTE: Prepared to fit Baldwin mortise or trim cylinders only.

8300

Compression Cylinder Collar

8314

Standard Rim Cylinder Collar
Diameter: 1.945″ (49mm)
Thickness: .030 (.8mm)
Adjustment Range: None

MORTISE CYLINDER SPECIFICATIONS

Mortise Lock Cylinders

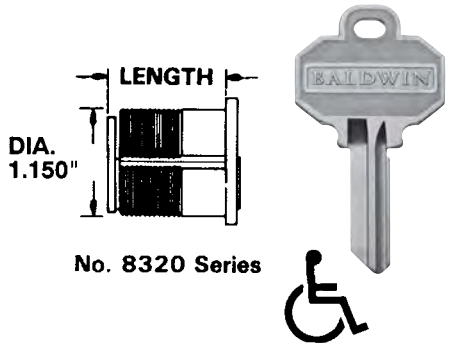

Length of Mortise Cylinders: The length of a Baldwin cylinder is the measurement from the back edge of the cylinder cap to the outer surface of the cam as illustrated.

Item Number				
C(03) Keyway	E(05) Keyway	F(06) Keyway	Cylinder Length	
8321	8341	8361	1″	(25mm)
8322	8342	8362	1.125″	(29mm)
8323	8343	8363	1.25″	(32mm)
8324	8344	8364	1.375″	(35mm)
8325	8345	8365	1.5″	(38mm)
8326	—	—	1.625″	(41mm)
8327	—	—	1.75″	(44mm)
8328	—	—	2″	(51mm)
8329	—	—	2.25″	(57mm)
8330	—	—	2.5″	(64mm)

Features: Baldwin 6 pin (5 pin for 1″ [25mm]) precision mortise cylinders are made of solid extruded brass. Finish is applied to cap only. When ordered separately, cylinders are supplied with 2 nickel silver keys. Cam 8300.509.STD is furnished. Cams illustrated on page 160 can be ordered at additional charge. Cylinder lengths greater than 1.5″ (38mm) are not available for E(05) and F(06) keyway Cylinders.

Keying Requirements: Available in a multitude of keying arrangements including Master, Grand Master and Construction Keying Levels.

Ordering Instructions: Standard Mortise Cylinder: Specify item number and finish. Hotel Mortise Cylinder: Specify item number, finish with suffix "H". Cylinder price includes all MK charges and standard key bow. Cylinder is available with 6 pin keying only.

No. 1 – 8320.XXX.003 – Series cylinder plug. Specify length required and either US4 or 26D finish.
No. 2 – 8300.509.STD – Cylinder Cam Standard
No. 3 – 8300.509.004 – Mounting Screws for cam
No. 4 – 8300.109.005 – Tumbler Springs
No. 5 – 8300.009.0065 – Spring Covers (5 pin)
8300.009.0066 – Spring Covers (6 pin)
No. 6 – 8320.009.101 – Top Pins (For Bottom Pins #0–#3)
8320.009.102 – Top Pins (For Bottom Pins #4–#6)
8320.009.103 – Top Pins (For Bottom Pins #7–#9)
No. 7 – 8320.009.202 #2 Master Pins - .0295 (0.749mm)
8320.009.203 #3 Master Pins - .0445 (1.130mm)
8320.009.204 #4 Master Pins - .0595 (1.511mm)
8320.009.205 #5 Master Pins - .0745 (1.892mm)
8320.009.206 #6 Master Pins - .0895 (2.273mm)
8320.009.207 #7 Master Pins - .1045 (2.654mm)
8320.009.208 #8 Master Pins - .1195 (3.035mm)
8320.009.209 #9 Master Pins - .1345 (3.416mm)
No. 8 – 8320.152.300 #0 Bottom Pins - .1655 (4.204mm)
8320.152.301 #1 Bottom Pins - .1805 (4.585mm)
8320.152.302 #2 Bottom Pins - .1955 (4.966mm)
8320.152.303 #3 Bottom Pins - .2105 (5.347mm)
8320.152.304 #4 Bottom Pins - .2255 (5.728mm)
8320.152.305 #5 Bottom Pins - .2405 (6.109mm)
8320.152.306 #6 Bottom Pins - .2555 (6.489mm)
8320.152.307 #7 Bottom Pins - .2705 (6.871mm)
8320.152.308 #8 Bottom Pins - .2855 (7.252mm)
8320.152.309 #9 Bottom Pins - .3005 (7.633mm)

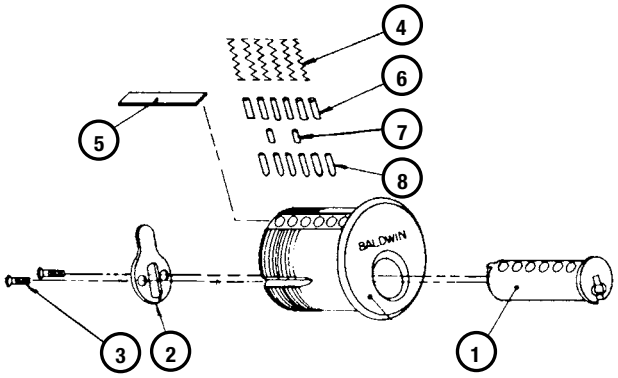

RIM CYLINDERS, FOR BALDWIN RIM LOCKS

Rim Lock Cylinders & Tailpiece Bars

8333

8333 – C(03) Keyway

Item #	Description	Keyway	003, 031, 033, 050 060, 102, 112 150, 151, 152 190, 260, 264	044 055, 056
8333.xxx	Rim Cylinder	C	$89	$94
8333.xxx.H	Rim Cylinder	C	$123	$129

Features: Baldwin 6 pin precision Rim Cylinders are made of solid extruded brass. Finish is applied to cap only. When ordered separately, Cylinders are supplied with 2 nickel silver keys. Tailpiece 8313.329.TPH1 is furnished. C(03) Keyway Cylinders are furnished standard with rim locks unless otherwise specified. Consult price list.

Keying Requirements: Available in a multitude of keying arrangements including Master, Grand Master and Construction Keying Levels.

Cylinder Collar: Cylinder Collars are furnished standard with all keyed rim locks.

Ordering Instructions: Standard Rim Cylinder: Specify item number and finish.

Weight Each: .3 lb. (.14kg)

Tailpiece Bars for Rim Cylinders

Item #	Description	329	
8313.329.TPH1	Rim cylinder tailpiece (regular – 2.22")	(329 finish only)	$9
8313.329.TPH2	Rim cylinder tailpiece (long – 3.1875")	(329 finish only)	$9

Rim Cylinder Tailpiece

MORTISE LOCKS

No. 1 – 8333.XXX.003 – Cylinder plug. Specify either US4 or 26D finish.
No. 2 – 8333.009.007 – Tailpiece Plate
No. 3 – 8300.509.004 – Mounting Screws for Tailpiece
No. 4 – 8300.109.005 – Tumbler Springs
No. 5 – 8300.009.0066 – Spring Covers (6 pin)
No. 6 – 8320.009.101 – Top Pins (For Bottom Pins #0–#3)
8320.009.102 – Top Pins (For Bottom Pins #4–#6)
8320.009.103 – Top Pins (For Bottom Pins #7–#9)
No. 7 – 8320.009.202 #2 Master Pins - .0295 (0.749mm)
8320.009.203 #3 Master Pins - .0445 (1.130mm)
8320.009.204 #4 Master Pins - .0595 (1.511mm)
8320.009.205 #5 Master Pins - .0745 (1.892mm)
8320.009.206 #6 Master Pins - .0895 (2.273mm)
8320.009.207 #7 Master Pins - .1045 (2.654mm)
8320.009.208 #8 Master Pins - .1195 (3.035mm)
8320.009.209 #9 Master Pins - .1345 (3.416mm)
No. 8 – 8320.152.300 #0 Bottom Pins - .1655 (4.204mm)
8320.152.301 #1 Bottom Pins - .1805 (4.585mm)
8320.152.302 #2 Bottom Pins - .1955 (4.966mm)
8320.152.303 #3 Bottom Pins - .2105 (5.347mm)
8320.152.304 #4 Bottom Pins - .2255 (5.728mm)
8320.152.305 #5 Bottom Pins - .2405 (6.109mm)
8320.152.306 #6 Bottom Pins - .2555 (6.489mm)
8320.152.307 #7 Bottom Pins - .2705 (6.871mm)
8320.152.308 #8 Bottom Pins - .2855 (7.252mm)
8320.152.309 #9 Bottom Pins - .3005 (7.633mm)
No. 9 – 8333.009.010 Spacer
No. 10 – 8313.329.TPH1 Tailpiece – Horizontal (Regular)
8313.329.TPH2 Tailpiece – Horizontal (Long)
No. 11 – 8313.509.008 Mounting Plate
No. 12 – 8313.509.009 Mounting Screws

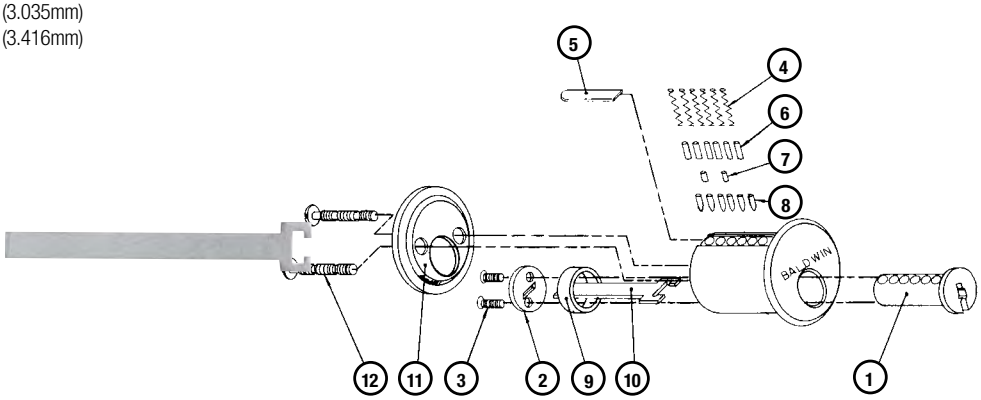

***Cylinders NOT available in Distressed finishes, non-distressed equivalents: 402=102, 452=152**

KEY BLANKS

Key Blanks			Price
K	8335.152	5-pin standard key blank, C (03) keyway, 50/box	$4
K	8335.152.CK	Construction key	$10
K	8335.152.CUTK	Cut keys ordered separately	$14
K	8335.152.DK	Display keys	$29
K	8335.152.EK	Emergency keys	$29
K	8335.152.GGGM	Great great grand master keys	$29
K	8335.152.GGMK	Great grand master keys	$29
K	8335.152.GMK	Grand master keys	$29
K	8335.152.MK	Master keys	$29
K	8335.152.SKD	Single keyed different	$29
K	8335.152.SOK	Shut out keys	$29
K	8336.152	6-pin key blank, C (03) keyway, 50/box	$4
K	8336.152.CK	Construction key	$10
K	8336.152.CUTK	Cut keys ordered separately	$14
K	8336.152.DK	Display keys	$29
K	8336.152.EK	Emergency keys	$29
K	8336.152.GGGM	Great great grand master keys	$29
K	8336.152.GGMK	Great grand master keys	$29
K	8336.152.GMK	Grand master keys	$29
K	8336.152.MK	Master keys	$29
K	8336.152.SKD	Single keyed different	$29
K	8336.152.SOK	Shut out keys	$29
K	8337.152	6-pin hotel large bow (2˝) key blank C (03) keyway	$12
K	8337.152.CK	Construction key	$10
K	8337.152.CUTK	Cut keys ordered separately	$14
K	8337.152.DK	Display keys	$29
K	8337.152.EK	Emergency keys	$29
K	8337.152.GGGM	Great great grand master keys	$29
K	8337.152.GGMK	Great grand master keys	$29
K	8337.152.GMK	Grand master keys	$29
K	8337.152.HOTL	Hotel key bow	$11
K	8337.152.MK	Master keys	$29
K	8337.152.SKD	Single keyed different	$29
K	8337.152.SOK	Shut out keys	$29
K	8355.152	5-pin standard key blank, E (05) keyway, 50/box	$6
K	8355.152.CK	Construction key	$10
K	8355.152.CUTK	Cut keys ordered separately	$14
K	8355.152.DK	Display keys	$29
K	8355.152.EK	Emergency keys	$29
K	8355.152.GGGM	Great great grand master keys	$29
K	8355.152.GGMK	Great grand master keys	$29
K	8355.152.GMK	Grand master keys	$29
K	8355.152.MK	Master keys	$29
K	8355.152.SKD	Single keyed different	$29
K	8355.152.SOK	Shut out keys	$29
K	8356.152	6-pin key blank, E (05) keyway, 50/box	$6
K	8356.152.CK	Construction key	$10
K	8356.152.CUTK	Cut keys ordered separately	$14
K	8356.152.DK	Display keys	$29
K	8356.152.EK	Emergency keys	$29
K	8356.152.GGGM	Great great grand master keys	$29
K	8356.152.GGMK	Great grand master keys	$29
K	8356.152.GMK	Grand master keys	$29
K	8356.152.MK	Master keys	$29
K	8356.152.SKD	Single keyed different	$29
K	8356.152.SOK	Shut out keys	$29
K	8357.152	6-pin hotel large bow (2˝) key blank E (05) keyway	$12
K	8357.152.CK	Construction key	$10
K	8357.152.CUTK	Cut keys ordered separately	$14
K	8357.152.DK	Display keys	$29
K	8357.152.EK	Emergency keys	$29
K	8357.152.GGGM	Great great grand master keys	$29
K	8357.152.GGMK	Great grand master keys	$29
K	8357.152.GMK	Grand master keys	$29
K	8357.152.HOTL	Hotel key bow	$11
K	8357.152.MK	Master keys	$29
K	8357.152.SKD	Single keyed different	$29
K	8357.152.SOK	Shut out keys	$29
K	8375.152	5-pin key blank, E (06) keyway, 50/box	$6
K	8375.152.CK	Construction key	$10
K	8375.152.CUTK	Cut keys ordered separately	$14
K	8375.152.DK	Display keys	$29
K	8375.152.EK	Emergency keys	$29
K	8375.152.GGGM	Great great grand master keys	$29
K	8375.152.GGMK	Great grand master keys	$29
K	8375.152.GMK	Grand master keys	$29
K	8375.152.MK	Master keys	$29
K	8375.152.SKD	Single keyed different	$29
K	8375.152.SOK	Shut out keys	$29
K	8376.152	6-pin key blank, F (06) keyway, 50/box	$6
K	8376.152.CK	Construction key	$10
K	8376.152.CUTK	Cut keys ordered separately	$14
K	8376.152.DK	Display keys	$29
K	8376.152.EK	Emergency keys	$29
K	8376.152.GGGM	Great great grand master keys	$29
K	8376.152.GGMK	Great grand master keys	$29
K	8376.152.GMK	Grand master keys	$29
K	8376.152.MK	Master keys	$29
K	8376.152.SKD	Single keyed different	$29
K	8376.152.SOK	Shut out Keys	$29
K	8377.152	6-pin hotel large bow (2˝) key blank F (06) keyway	$12
K	8377.152.CK	Construction key	$10
K	8377.152.CUTK	Cut keys ordered separately	$14
K	8377.152.DK	Display keys	$29
K	8377.152.EK	Emergency keys	$29
K	8377.152.GGGM	Great great grand master keys	$29
K	8377.152.GGMK	Great grand master keys	$29
K	8377.152.GMK	Grand master keys	$29
K	8377.152.HOTL	Hotel keys bow	$11
K	8377.152.MK	Master keys	$29
K	8377.152.SKD	Single keyed different	$29
K	8377.152.SOK	Shut out keys	$29
K	8401.152	Issued under factory authorization only. Not available for normal sale	$7
K	8406.152	Issued under factory authorization only. Not available for normal sale	$7
K	8416.152	Issued under factory authorization only. Not available for normal sale	$7
‡	8053.040.0002	Construction key cylinder plug 040	$5
	8053.264.002	264	$5
		*Per cylinder master keying charge	$20
		*Per cylinder construction keying charge	$20

*NOTE: 2 Keys provided per cylinder.

*NOTE: 152 finish in cylinders, locks, and latches is Antique Nickel with matte lacquer. This coordinates with lock trim in 452 finish.

					Price
1A	8490.000.001	.25-20 × 3″ FH PH MS	Door knocker/hand set/thru-bolt	10 ea	$12
1B	8490.000.002	No. 10-24 × 3″ OH PH MS × 260	Extra long trim thru-bolts	10 ea	$13
1C	8490.000.003	No. 10-24 × 3″ OH PH MS × 030	Extra long trim thru-bolts	10 ea	$13
2A	8490.000.004	No. 10 × 1″ FH PH UC WS × 030	Hinge screws	100 ea	$45
2B	8490.000.005	No. 12 × 1.25″ FH PH UC WS × 030	Hinge screws	100 ea	$51
3A	8490.000.006	No. 10-24 × .5″ FH PH MS × 030	Hinge screws	100 ea	$52
3B	8490.000.007	No. 12-24 × .5″ FH PH MS × 030	Hinge screws	100 ea	$35
4B	8490.000.010	No. 6 × .625″ OH PH SMS × 040	Kick plate screws	200 ea	$59
8A	8490.000.019	No. 8-32 Combination WS/MS	Bread board screws for cabinet knobs	25 ea	$62
8B	8490.000.020	No. 6-32 × .375″ OH SL MS	Switch plate screws	50 ea	$20
8D	8490.000.022	No. 8 × .75″ FH PH WS	Latch/strike/DM backplate screws	50 ea	$19
8B	8490.000.023	No. 8 × .375″ FH PH SMS	Screws for No. 5097 backplate	100 ea	$27
9A	8490.000.024	No. 12 × 1″ FH PH Comb	Mortise lock screws	50 ea	$15
9B	8490.000.025	No. 4 × .75″ RD SL WS × 040	Lock trim/house number screws	50 ea	$15
9C	8490.000.026	No. 5 × .625″ FH SL WS × 040	Lock trim screws	50 ea	$36
10A	8490.000.027	No. 6 × .5″ OH SL WS × 040	Lock trim screws	100 ea	$37
10B	8490.000.028	No. 8 × .875″ OH PH WS × 040	Lock trim screws	100 ea	$34
10C	8490.000.029	No. 10 × 2″ OH SL WS × 030	Lock trim screws	20 ea	$32
11C	8490.000.032	No. 8-32 × .218″ FH PH UC MS × 030	Lock trim screws	20 ea	$7
11D	8490.000.033	No. 8-32 × .218″ FH PH UC MS × 260	Lock trim screws	20 ea	$7
11E	8490.000.034	No. 8-32 × .218″ FH PH UC MS × 102	Lock trim screws	20 ea	$7
12A	8490.000.035	No. 10-24 × 2.125″ OH PH MS × 030	Trim thru-bolts	20 ea	$11
13A	8490.000.037	No. .25-20 UNC × .25″	Socket set screws #0561	200 ea	$98
14A	8490.000.038	No. 8-32 × .5″ FH PH MS	Installation plate screws	100 ea	$44
14B	8490.000.039	No. 6-32 × .25″ PAN SL MS	Lock front beveling screws	20 ea	$7
14C	8490.000.040	No. 8-32 × .25″ FH PH U/C MS	Lock lid screws	20 ea	$7
15A	8490.000.041	Complete yoke assembly	For 2.75″ backset locks	2 ea	$15
15B	8490.000.042	Complete yoke assembly	For 2.5″ backset locks	2 ea	$15
16A	8490.000.043	Stop ball	For all mortise locks	10 ea	$7
16B	8490.000.044	Stop spring	For all mortise locks	10 ea	$7
17A	8490.000.045	Turn hub spring	For 2.75" backset mortise locks	5 ea	$7
18A	8490.000.047	Latch spring	For 2.75″ backset locks	5 ea	$7
18B	8490.000.048	Lift lever spring	For 2.75″ backset handleset functions	5 ea	$7
19A	8490.000.049	Anti-friction hinge pin	All locks with anti-friction latch	10 ea	$5
19B	8490.000.050	Wear washer	For 2.5″ & 2.75″ B.S. emergency egress locks	10 ea	$5
20B	8490.000.052	Hub lever spring	For 2.5" backset locks	5 ea	$7
21A	8490.000.053	Lift lever spring	For 2.5″ backset handleset functions	5 ea	$7
21B	8490.000.054	Latch spring	For 2.5″ backset locks	5 ea	$7
22A	8490.000.055	Turn hub spring	For 1.5″ & 2.0″ backset locks	5 ea	$7
22B	8490.000.056	Hub lever spring	For 1.5″ & 2.0 backset locks	5 ea	$7
24B	8490.000.060	Cylinder yoke	For 1.5″ & 2.0″ backset locks	2 ea	$7
25A	8490.000.061	Cylinder set screw	For 1.5″ backset locks	2 ea	$5
25B	8490.000.062	Cylinder set screw	For 2.0" backset locks	2 ea	$7

TOOLS & ACCESSORIES

8472.000.001
Cylinder Plug Follower

8472.000.002
Tweezers

8472.000.003
Depth Key Set

8480.000
Aligning Tool

For use in proper alignment of knobs, levers, roses and escutcheon with mortise locks/tubular latches.

8481.509.01105
Allen Wrench

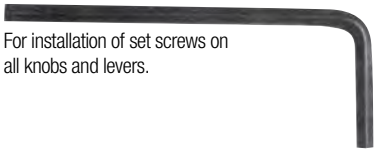

For installation of set screws on all knobs and levers.

8484.000
Lock Reversing Block

FEATURES: Provides means to align and secure mortise locks to facilitate reversing of handed internal parts.

PACKED: One in a box.

WEIGHT PER BOX: .9 lb. (.41kg)

Item #	Description	Price
6707.009	Cylinder reinforcing plug	$9
8472.000.001	Cylinder plug follower included with keying kits	$45
8472.000.002	Tweezers for gripping cylinder pins included w/8472 kit	$45
8472.000.003	Depth key set, furnished with 10 keys (0 thru 9 depths)	$45
8474.000	Alignment bushing (Bag of 50)	$18
8480.000	Aligning tool. Used to align back plates & escutcheons w/locks	$14
8481.509.01105	1/8″ allen wrench used to tighten set screws	$14
8484.000	Lock reversing block. Simplifies changing hand of mortise locks	$19 NET

Keying Kits

Item #	Description	Finish	Price
8471.000	Small keying kit for keying (C) cylinders alike	000	$123
8472.000	Large keying kit for all (C)keying applications inc. master keying	000	$573
8320.009.101	#1 top pins (100 each per pack)	009	$28
8320.009.102	#2 top pins (100 each per pack)	009	$28
8320.009.103	#3 top pins (100 each per pack)	009	$28
8320.009.202	#2 master pins (100 each per pack)	009	$28
8320.009.203	#3 master pins (100 each per pack)	009	$28
8320.009.204	#4 master pins (100 each per pack)	009	$28
8320.009.205	#5 master pins (100 each per pack)	009	$28
8320.009.206	#6 master pins (100 each per pack)	009	$28
8320.009.207	#7 master pins (100 each per pack)	009	$28
8320.009.208	#8 master pins (100 each per pack)	009	$28
8320.009.209	#9 master pins (100 each per pack)	009	$28
8320.152.300	#0 bottom pins (100 each per pack)	152	$28
8320.152.301	#1 bottom pins (100 each per pack)	152	$28
8320.152.302	#2 bottom pins (100 each per pack)	152	$28
8320.152.303	#3 bottom pins (100 each per pack)	152	$28
8320.152.304	#4 bottom pins (100 each per pack)	152	$28
8320.152.305	#5 bottom pins (100 each per pack)	152	$28
8320.152.306	#6 bottom pins (100 each per pack)	152	$28
8320.152.307	#7 bottom pins (100 each per pack)	152	$28
8320.152.308	#8 bottom pins (100 each per pack)	152	$28
8320.152.309	#9 bottom pins (100 each per pack)	152	$28
8320.152.401	Hotel pin	152	$28
8300.109.005	Tumbler springs	109	$32
8300.009.0065	Spring covers	009	$32
8300.009.0066	Spring covers	009	$32
8300.509.STD	Standard cams	509	$9
8300.509.AR	Adams rite cams	509	$9
8300.509.004	Cam mounting screws	509	$36
8313.329.TPH1	Tailpiece (regular) for rim lock cylinders	329	$9
8313.329.TPH2	Tailpiece (long) for rim lock cylinders	329	$9
8313.509.008	Mounting plate	509	$4
8313.509.009	Mounting screws	509	$4
8333.009.007	Tailpiece plate	009	$6
8333.009.010	Spacer	009	$6
8472.000.001	Cylinder plug follower	000	$45
8011.028.0025	Washer	028	$4
8011.039.0027	Cap	039	$5
8053.028.TP1	Tailpiece - double cylinder	028	$4
8053.028.TP2	Tailpiece - emergency exit	028	$4
8053.028.TP3*	Tailpiece - single cylinder for 1 ⅜″ door thickness	028	$4
8053.028.TP4	Tailpiece - single cylinder for 1 ¾″ door thickness	028	$4
8475.000.001	Cap tool	000	$6
8472.000.004	Shim	000	$3
8011.039.0023	Pins	039	$3
8011.109.0022	Springs	109	$3
8472.000.006	Key gauge	000	$14
8472.000.002	Tweezers	000	$45
9940.000.A	Finish demonstrator	000	$41**

***NOTE:** 8053.028.TP3 Tailpiece for doors 1 3/8″ thick is not supplied as a standard component of the kit but can be ordered separately.

**Net Price

NOTES

SCREEN DOOR LOCKS

Concord SD004
Passage Set Shown

Trim Only Functions - Available while supplies last. Privacy & Passage Sets will remain Active.

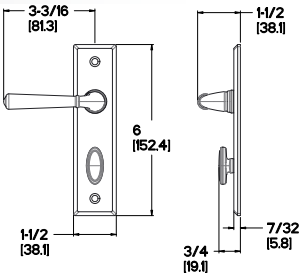

	Item #	Description	Wt.	003, 031, 033 050, 060, 102 112, 150, 151 190, 260, 264	044, 055, 056 402, 452
SET	SD004.xxx.PRIV	Concord Privacy Set		$299	$330
SET	SD004.xxx.PASS	Concord Passage Set		$266	$293
TRIM	SD004.xxx.KNOS	Concord Outside KN		$37	$41
TRIM	SD004.xxx.KNIS	Concord inside KN		$37	$41
TRIM	SD004.xxx.KTIS	Concord inside KT		$61	$64

Minneapolis SD005
Privacy Set Shown

Trim Only Functions - Available while supplies last. Privacy & Passage Sets will remain Active.

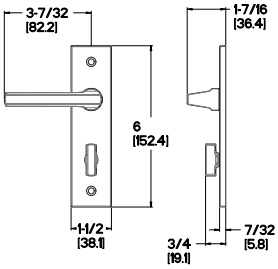

	Item #	Description	Wt.	003, 031, 033 050, 060, 102 112, 150, 151 190, 260, 264	044, 055, 056 402, 452
SET	SD005.xxx.PRIV	Minneapolis Privacy Set		$299	$330
SET	SD005.xxx.PASS	Minneapolis Passage Set		$266	$293
TRIM	SD005.xxx.KNOS	Minneapolis Outside KN		$37	$41
TRIM	SD005.xxx.KNIS	Minneapolis KNIS		$37	$41
TRIM	SD005.xxx.KTIS	Minneapolis KTIS		$61	$64

Cody SD015
Passage Set Shown

Sets & Trims - Available while supplies last.

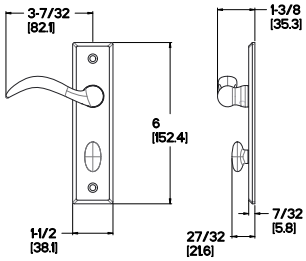

	Item #	Description	Wt.	003, 031, 033 050, 060, 102 112, 150, 151 190, 260, 264	044, 055, 056 402, 452
SET	SD015.xxx.PRIV	Cody Privacy Set		$299	$330
SET	SD015.xxx.PASS	Cody Passage Set		$266	$293
TRIM	SD004.xxx.KNOS	Cody/Condord Outside KN		$37	$41
TRIM	SD004.xxx.KNIS	Cody/Condord KNIS		$37	$41
TRIM	SD015.xxx.KTIS	Cody KTIS		$61	$64

Boulder SD016
Passage Set Shown

Sets & Trims - Available while supplies last.

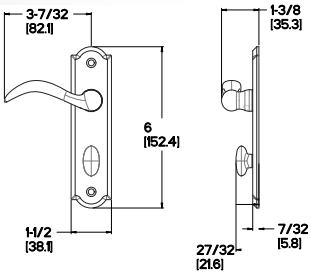

	Item #	Description	Wt.	003, 031, 033 050, 060, 102 112, 150, 151 190, 260, 264	044, 055, 056 402, 452
SET	SD016.xxx.PRIV	Boulder Privacy Set		$299	$330
SET	SD016.xxx.PASS	Boulder Passage Set		$266	$293
TRIM	SD016.xxx.KNOS	Boulder Outside KN		$37	$41
TRIM	SD016.xxx.KNIS	Boulder KNIS		$37	$41
TRIM	SD016.xxx.KTIS	Boulder KTIS		$61	$64

SCREEN DOOR KNOBS / LEVERS

K010 Knob
Shown w/ SD005 backplate

Available while supplies last.

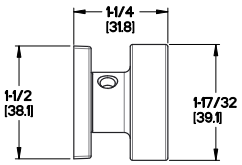

Item #	Description	Wt.	003, 031, 033 050, 060, 102 112, 150, 151 190, 260, 264	044, 055, 056 402, 452
K010.xxx.MR	Minus Roses - Pair		$67	$75
K010.xxx.IMR	Individual Minus Rose - Half Pair		$34	$37

K011 Knob
Shown w/ SD004 backplate

Available while supplies last.

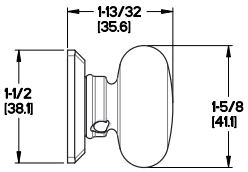

Item #	Description	Wt.	003, 031, 033 050, 060, 102 112, 150, 151 190, 260, 264	044, 055, 056 402, 452
K011.xxx.MR	Minus Roses - Pair		$67	$75
K011.xxx.IMR	Individual Minus Rose - Half Pair		$34	$37

L026 Lever
Shown w/ SD005 backplate

Available while supplies last.

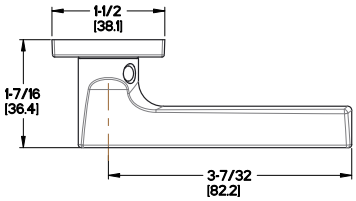

Item #	Description	Wt.	003, 031, 033 050, 060, 102 112, 150, 151 190, 260, 264	044, 055, 056 402, 452
L026.xxx.MR	Minus Roses - Pair		$67	$75
L026.xxx.RMR (.LMR)	Right (Left) Minus Rose - Half Pair		$34	$37

L027 Lever
Shown w/ SD004 backplate

Available while supplies last.

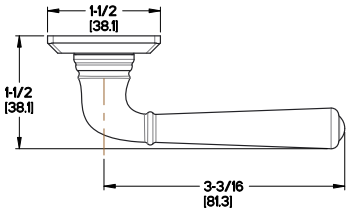

Item #	Description	Wt.	003, 031, 033 050, 060, 102 112, 150, 151 190, 260, 264	044, 055, 056 402, 452
L027.xxx.MR	Minus Rose - Pair		$67	$75
L027.xxx.RMR (.LMR)	Right (Left) Minus Rose - Half Pair		$34	$37

L028 Lever
Shown w/ SD016 backplate

Available while supplies last.

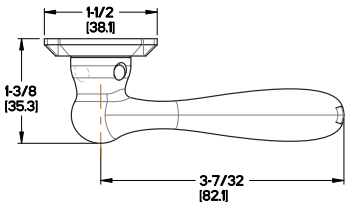

Item #	Description	Wt.	003, 031, 033 050, 060, 102 112, 150, 151 190, 260, 264	044, 055, 056 402, 452
L028.xxx.MR	Minus Rose - Pair		$67	$75
L028.xxx.RMR (.LMR)	Right (Left) Minus Rose - Half Pair		$34	$37

8520, 8525 Screen Locks

Available while supplies last.

Item #	Description	Wt.	003, 031, 033 050, 060, 102 112, 150, 151 190, 260, 264	044, 055, 056 402, 452
8520.xxx	Screen Door - Passage Lock		$145	$155
8525.xxx	Screen Door - Private Lock		$155	$169
8520.xxx.0004	Passage Armored Front		$31	$47
8525.xxx.0004	Privacy Armored Front		$31	$47
0508.004	Broached Straight - Spindle		$13	

NOTE: 8520 & 8525 include Armored Front and Spindle.

SPECIFICATION

Standardized heavy steel case is smooth, easy to mortise, and assures snug and solid fit in door mortise.
Vital interior working parts are made of brass (non-ferrous) and stainless steel (non-corrosive) for a lifetime of trouble-free operation.
All lock cases are constructed of heavy gauge stainless steel (.060 in / 1.5 mm) non-corrosive material.

BACKSET: 1-1/2”

MINIMUM DOOR THICKNESS: 1-1/8”

MAXIMUM DOOR THICKNESS: 1-3/8”

FACEPLATE: Wrought brass or stainless steel, available in standard finishes.

DEADBOLT: 8525 lock is equipped with a 7/16” (11mm) throw deadbolt with Brass or Stainless Steel that engage strike. Furnished in US4 and 26D finishes depending on faceplate finish.

LATCHBOLT: 8525 AND 8520 locks are equipped with a 3/8” (10mm) throw latchbolt with Brass or Stainless Steel that engage strike. Furnished in US4 and 26D finishes depending on faceplate finish.

HUB: 8520 and 8525 locks include hub with .29” (7mm) hole broached on the diamond.

TURN HUB: 8525 lock include turn hub with .19” (5mm) hole broached on the diamond.

SPACING: Center to center of Turn Hub to Hub of 8525 is 2.25” (57mm).

STRIKE: Wrought brass or stainless steel finished to match. Included with 8520 and 8520 locks.

TEMPLATE: Provided along with install instructions with all locks. Face cutouts are subject to variation. Always review trim requirements before door preparation

NOTES

NOTES

MISCELLANEOUS

SLIDING DOOR LOCKS

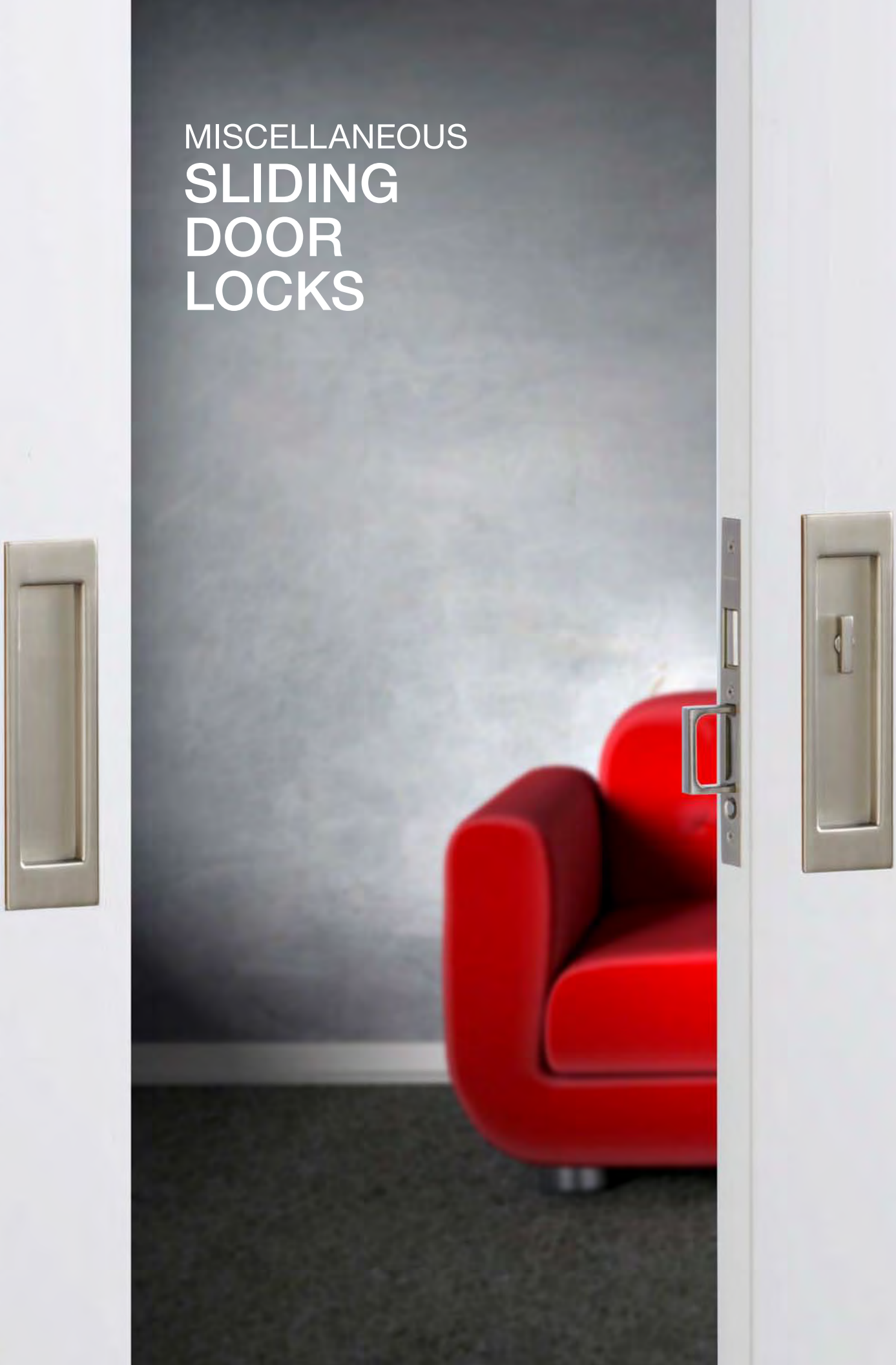

SANTA MONICA - LARGE

	Item #	Description		003, 031, 033 050, 060, 102 112, 150, 151 190, 260, 264	044, 055, 056 402, 452
SET*	PD005.xxx.ENTR	Entry set with 2.5" backset lock*	Set	$684	$748
	PD005.xxx.PRIV	Privacy set with 2.5" backset lock	Set	$684	$748
	PD005.xxx.PASS	Passage/dummy set with pull	Set	$608	$666
	PD005.xxx.FD	Dummy set for double doors	Set	$643	$702
	PD005.xxx.PS	Passage Trim - Pair	Pair	$246	$269
TRIM	PD005.xxx.iPS	Passage Trim - half pair	Each	$123	$135
	PD005.xxx.KE	Trim with Emergency Release (KE)	Each	$123	$135
	PD005.xxx.KC	Trim Cut for Cylinder (KC)	Each	$123	$135
	PD005.xxx.KT	Interior Trim with Turn Knob (KT)	Each	$164	$182

*Entry set excludes cylinder

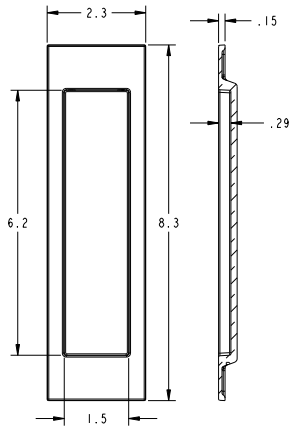

Minimum Door Thickness: 1.50"
Minimum Door Thickness for flush installation: 1.75”

Sets	PD005.xxx.PRIV	PD005.xxx.PASS
Exterior Trim	PD005.xxx.KE	PD005.xxx.iPS
Interior Trim	PD005.xxx.KT	PD005.xxx.iPS
Cylinder	N/A	N/A
Mortise Lock	8632.xxx	8601.xxx

Designer	Privacy	Passage	Entry	Double Door Inactive (Order Privacy for Active Side)
Exterior Trim	PD005.xxx.KE	PD005.xxx.iPS	PD005.xxx.KC	PD005.xxx.iPS
Interior Trim	PD006.xxx.KT	PD007.xxx.iPS	PD006.xxx.KT	PD005.xxx.iPS
Cylinder	N/A	N/A	8320.xxx.EMHT (1.75" door thickness*)	N/A
Mortise Lock	8632.xxx	8601.xxx	8632.xxx	8603.xxx

* see page 175 for pocket door cylinder table

SANTA MONICA - SMALL

	Item #	Description		003, 031, 033 050, 060, 102 112, 150, 151 190, 260, 264	044, 055, 056 402, 452
SET *	PD006.xxx.ENTR	Entry set with 2.5" backset lock*	Set	$638	$702
	PD006.xxx.PRIV	Privacy set with 2.5" backset lock	Set	$638	$702
	PD006.xxx.PASS	Passage/dummy set with pull	Set	$561	$620
	PD006.xxx.FD	Dummy set for double doors	Set	$596	$655
	PD006.xxx.PS	Passage Trim - Pair	Pair	$199	$222
TRIM	PD006.xxx.iPS	Passage Trim - half pair	Each	$99	$112
	PD006.xxx.KE	Trim with Emergency Release (KE)	Each	$99	$112
	PD006.xxx.KC	Trim Cut for Cylinder (KC)	Each	$99	$112
	PD006.xxx.KT	Interior Trim with Turn Knob (KT)	Each	$141	$158

*Entry set excludes cylinder.

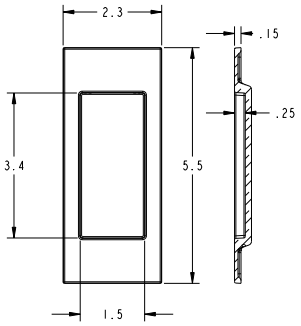

Minimum Door Thickness: 1.375"
Minimum Door Thickness for flush installation: 1.5"

Sets	PD006.xxx.PRIV	PD006.xxx.PASS
Exterior Trim	PD006.xxx.KE	PD006.xxx.iPS
Interior Trim	PD006.xxx.KT	PD006.xxx.iPS
Cylinder	N/A	N/A
Mortise Lock	8632.xxx	8601.xxx

Designer	Privacy	Passage	Entry	Double Door Inactive (Order Privacy for Active Side)
Exterior Trim	PD006.xxx.KE	PD006.xxx.iPS	PD006.xxx.KC	PD006.xxx.iPS
Interior Trim	PD006.xxx.KT	PD016.xxx.iPS	PD007.xxx.KT	PD006.xxx.iPS
Cylinder	N/A	N/A	8320.xxx.EMHT (1.75" door thickness*)	N/A
Mortise Lock	8632.xxx	8601.xxx	8632.xxx	8603.xxx

* see page 175 for pocket door cylinder table

PALO ALTO

	Item #	Description		003, 031, 033 050, 060, 102 112, 150, 151 190, 260, 264	044, 055, 056 402, 452
SET*	PD007.xxx.ENTR	Entry set with 2.5" backset lock*	Set	$638	$702
	PD007.xxx.PRIV	Privacy set with 2.5" backset lock	Set	$638	$702
	PD007.xxx.PASS	Passage/dummy set with pull	Set	$561	$620
	PD007.xxx.FD	Dummy set for double doors	Set	$596	$655
	PD007.xxx.PS	Passage Trim - Pair	Pair	$199	$222
TRIM	PD007.xxx.iPS	Passage Trim - half pair	Each	$99	$112
	PD007.xxx.KE	Trim with Emergency Release (KE)	Each	$99	$112
	PD007.xxx.KC	Trim Cut for Cylinder (KC)	Each	$99	$112
	PD007.xxx.KT	Interior Trim with Turn Knob (KT)	Each	$141	$158

*Entry set excludes cylinder.

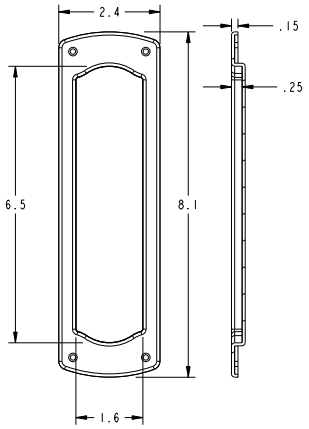

Minimum Door Thickness: 1.375”
Minimum Door Thickness for Keyed Entry: 1.5”

Sets	PD007.xxx.PRIV	PD007.xxx.PASS
Exterior Trim	PD007.xxx.KE	PD007.xxx.iPS
Interior Trim	PD007.xxx.KT	PD007.xxx.iPS
Cylinder	N/A	N/A
Mortise Lock	8632.xxx	8601.xxx

Designer	Privacy	Passage	Entry	Double Door Inactive (Order Privacy for Active Side)
Exterior Trim	PD007.xxx.KE	PD007.xxx.iPS	PD007.xxx.KC	PD007.xxx.iPS
Interior Trim	PD005.xxx.KT	PD007.xxx.iPS	PD007.xxx.KT	PD007.xxx.iPS
Cylinder	N/A	N/A	8320.xxx.EMHT (1.75" door thickness*)	N/A
Mortise Lock	8632.xxx	8601.xxx	8632.xxx	8603.xxx

* see page 175 for pocket door cylinder table

BOULDER

	Item #	Description		003, 031, 033 050, 060, 102 112, 150, 151 190, 260, 264	044, 055, 056 402, 452
SET*	PD016.xxx.ENTR	Entry set with 2.5" backset lock*	Set	$660	$725
	PD016.xxx.PRIV	Privacy set with 2.5" backset lock	Set	$660	$725
	PD016.xxx.PASS	Passage/dummy set with pull	Set	$585	$643
	PD016.xxx.FD	Dummy set for double doors	Set	$620	$679
	PD016.xxx.PS	Passage Trim - Pair	Pair	$222	$246
TRIM	PD016.xxx.iPS	Passage Trim - half pair	Each	$112	$123
	PD016.xxx.KE	Trim with Emergency Release (KE)	Each	$112	$123
	PD016.xxx.KC	Trim Cut for Cylinder (KC)	Each	$112	$123
	PD016.xxx.KT	interior Trim with Turn Knob (KT)	Each	$153	$170

*Entry set excludes cylinder.

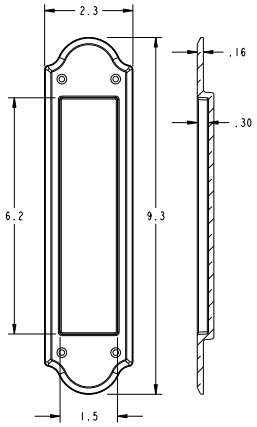

Minimum Door Thickness: 1.75"

Sets	PD016.xxx.PRIV	PD016.xxx.PASS
Exterior Trim	PD016.xxx.KE	PD016.xxx.iPS
Interior Trim	PD016.xxx.KT	PD016.xxx.iPS
Cylinder	N/A	N/A
Mortise Lock	8632.xxx	8601.xxx

Designer	Privacy	Passage	Entry	Double Door Inactive (Order Privacy for Active Side)
Exterior Trim	PD016.xxx.KE	PD016.xxx.iPS	PD016.xxx.KC	PD016.xxx.iPS
Interior Trim	PD006.xxx.KT	PD005.xxx.iPS	PD007.xxx.KT	PD016.xxx.iPS
Cylinder	N/A	N/A	8320.xxx.EMHT (1.75" door thickness*)	N/A
Mortise Lock	8632.xxx	8601.xxx	8632.xxx	8603.xxx

* see page 175 for pocket door cylinder table

Pocket door pull

SPECIFICATIONS

Standardized heavy steel case is smooth, easy to mortise, and assures snug and solid fit in door mortise.
Vital interior working parts are made of solid hot forged brass or steel for a lifetime of trouble-free operation.
All lock cases are constructed of heavy gauge steel (.093-2.4mm) material and plated with a protective rust-resistant coating to retard oxidation.

FACEPLATE: Wrought brass, available in standard finishes.
DEADBOLT: 8602 and 8632 locks are equipped with a 1" (25mm) throw deadbolt with steel inserts that engage strike. Furnished in US4 and 26D finishes depending on faceplate finish.
PULL: All locks are equipped with a 1.25" (32mm) throw pull. Pull is thrown by push button on lock front. Furnished in US4 and 26D finishes to match trim.
TURN HUB: 8602 and 8632 locks include turn hub with .19" (5mm) hole broached on the diamond.
SPACING: Center to center of Turn Hub to Cylinder 1.187" (30mm).
CYLINDER: Emhart mortise type with 03 keyway and two silver nickel keys. Cylinder is not supplier with lock and should be ordered with suffix ".EMHT" added to the end of the Item #. (same price as standard C keyway cylinders)
KEYING: All levels of Keying, including Construction Keying, are available.
STRIKE: Wrought brass finished to match. Included with 8602 and 8632 locks only. 8603 lock is spring-loaded strike combined with pull (for double door applications).
TEMPLATE:Provided along with install instructions with all locks. Face cutouts are subject to variation. Always review trim requirements before door preparation.

Item #	Description	
8601.xxx	Pocket Door Pull	For Passage and Dummy Functions, included on passage (PASS) sets
8602.xxx	Pocket Door Lock with Pull	For Privacy and Entry Functions, (2.75" backset)
8603.xxx	Pocket Door Strike with Pull	For Dummy Side of Double Door, included in dummy for double door application (FD) functions. Requires privacy or entry function lock for active door.
8632.xxx	Pocket Door Lock with Pull	For Privacy and Entry Functions, (2.5" backset)

Mortise Locks are NOT available in Distressed Finishes, non-distressed equivalents 402=102, 452=152
Pocket Door Pull locks come with 7/8" fronts; all other pocket door locks comes with 1" fronts

Pocket door lock with pull

Item #	Description		003, 031, 033, 050 060, 102, 112 150, 151, 152 190, 260, 264	044, 055, 056
8320.xxx.EMHT	.75" (4 pin)	Mortise Cylinder	$65	$71
8321.xxx.EMHT	1"	Mortise Cylinder	$65	$71
8322.xxx.EMHT	1.125"	Mortise Cylinder	$65	$71
8323.xxx.EMHT	1.25"	Mortise Cylinder	$65	$71

Mortise Cylinders are NOT available in Distressed Finishes, non-distressed equivalents 402=102, 452=152

SINGLE CYLINDER C KEYWAY	Door Thickness	1.375"		1.5"		1.75"		2"		2.25"		2.5"	
Trim Style Name	Trim Style #	Cylinder Length	Blocking Ring	Cylinder Length	Blocking Ring	Cylinder Length	Blocking Ring	Cylinder Length	Blocking Ring	Cylinder Length	Blocking Ring	Cylinder Length	Blocking Ring
Large Santa Monica (Standard mounting)	PD005	-	-	.75" 8320.xxx. EMHT	-	.75" 8320.xxx. EMHT	-	1" 8321.xxx. EMHT	-	1" 8321.xxx. EMHT	-	1" 8321.xxx. EMHT	-
Large Santa Monica (Flush mounting)	PD005	-	-		-		-	1" 8321.xxx. EMHT	-	1" 8321.xxx. EMHT	-	1" 8321.xxx. EMHT	-
Small Santa Monica (Standard mounting)	PD006	.75" 8320.xxx. EMHT	-	.75" 8320.xxx. EMHT	-	.75" 8320.xxx. EMHT	-	1" 8321.xxx. EMHT	-	1" 8321.xxx. EMHT	-	1" 8321.xxx. EMHT	-
Small Santa Monica (Flush mounting)	PD006		-	.75" 8320.xxx. EMHT	.0625" 8440.xxx. 001	.75" 8320.xxx. EMHT	-	1" 8321.xxx. EMHT	-	1" 8321.xxx. EMHT	-	1" 8321.xxx. EMHT	-
Palo Alto	PD007	-	-	.75" 8320.xxx. EMHT		.75" 8320.xxx. EMHT	-	1" 8321.xxx. EMHT	-	1" 8321.xxx. EMHT	-	1" 8321.xxx. EMHT	-
Boulder	PD016	-	-	-	-	.75" 8320.xxx. EMHT	-	1" 8321.xxx. EMHT	-	1" 8321.xxx. EMHT	-	1" 8321.xxx. EMHT	-

Pocket door strike with pull

DOUBLE CYLINDER C KEYWAY	Door Thickness	1.375"		1.5"		1.75"		2"		2.25"		2.5"	
Trim Style Name	Trim Style #	Cylinder Length	Blocking Ring	Cylinder Length	Blocking Ring	Cylinder Length	Blocking Ring	Cylinder Length	Blocking Ring	Cylinder Length	Blocking Ring	Cylinder Length	Blocking Ring
Large Santa Monica (Standard mounting)	PD005	-	-	-	-	.75" 8320.xxx. EMHT	.0625" 8440. xxx.001	.75" 8320.xxx. EMHT*	-	1" 8321.xxx. EMHT	.0625" 8440. xxx.001	1" 8321.xxx. EMHT	-
Large Santa Monica (Flush mounting)	PD005	-	-		-	-	-	-	-	1" 8320.xxx. EMHT	-	1" 8321.xxx. EMHT	.0625" 8440. xxx.001
Small Santa Monica (Standard mounting)	PD006	-	-	-	-	.75" 8320.xxx. EMHT	.0625" 8440. xxx.001	.75" 8320.xxx. EMHT*	-	1" 8321.xxx. EMHT	.0625" 8440. xxx.001	1" 8321.xxx. EMHT	-
Small Santa Monica (Flush mounting)	PD006		-	-	-	-	-	.75" 8320.xxx. EMHT*	.0625" 8440. xxx.001	1" 8320.xxx. EMHT	-	1" 8321.xxx. EMHT	.0625" 8440. xxx.001
Palo Alto	PD007	-	-	-		.75" 8320.xxx. EMHT	.0625" 8440. xxx.002	.75" 8320.xxx. EMHT*	-	1" 8321.xxx. EMHT	.0937" 8440. xxx.002	1" 8321.xxx. EMHT	-
Boulder	PD016	-	-	-	-	.75" 8320.xxx. EMHT	.0625" 8440. xxx.002	.75" 8320.xxx. EMHT*	-	1" 8321.xxx. EMHT	.0937" 8440. xxx.002	1" 8321.xxx. EMHT	-

MULTI-POINT

HOW TO ORDER

Bristol – MP009

Richland – MP011

Lakeshore – MP013

Springfield – MP001

Bismark – MP002

Boulder – MP016

Cody – MP015

Concord – MP004

Kensington – MP003

Santa Monica – MP005

Watch for this icon as your quick guide to coordinating Baldwin lock hardware throughout your home. Your favorite Baldwin styles are now available in Mortise for entrance needs, Tubular for entrance/interiors, AND Multi-Point for patio doors!

- > FITS 92 AND 105 MM CYLINDER TO LEVER C.T.C.
- > ESTATE COLLECTION FINISH OPTIONS TO SUIT ANY HOME.
- > PROFILE OR AMERICAN CYLINDER.
- > AVAILABLE AS COMPLETE SETS, MINUS LEVER SETS, OR CHOOSE YOUR OWN LEVER STYLE TO BUILD A SET.
- > EASY INSTALLATION WITH ONE-BOX SHIPPING AND CYLINDER/HARDWARE FOR 1.75˝ THICK DOOR.
- > THROUGH-BOLT MOUNTING.
- > THICK DOOR KITS AVAILABLE.
- > ALL PROFILE AND AMERICAN CYLINDERS ARE FIELD KEYABLE TO BALDWIN KEYWAY.
- > 112 FINISH NOW AVAILABLE FOR ALL PROFILE CYLINDERS

PROFILE CYLINDERS

RECOMMENDED FINISHES	ORIGINAL FINISHES
040	003, 031, 033, 060, 044, 050
112	102, 190, 402, 112
264	055, 056, 150, 151, 260, 264, 452

AMERICAN CYLINDERS

RECOMMENDED FINISHES	ORIGINAL FINISHES
040	003, 031, 033, 044, 050, 060, 102, 112, 190, 402,
264	055, 056, 150, 151, 260, 264, 452

HOW TO ORDER

STEP 1 — PICK YOUR MULTI-POINT TRIM

EXAMPLE # **MP004** . xxx . xxxx

Trim Code	Description
MP001	Springfield Multi-Point Trim
MP002	Bismark Multi-Point Trim
MP003	Kensington Multi-Point Trim
MP004	Concord Multi-Point Trim
MP005	Santa Monica Multi-Point Trim
MP009	Bristol Multi-Point Trim
MP011	Richland Multi-Point Trim
MP013	Lakeshore Multi-Point Trim
MP015	Cody Multi-Point Trim
MP016	Boulder Multi-Point Trim

STEP 2 — CHOOSE YOUR DOOR CONFIGURATION

EXAMPLE # MP004 . xxx . xxx**1**

Configuration #	Description	Measurement	Page
Configuration 1	Profile Cylinder Below Handle	92mm CTC, 8.5″ Mounting Hole CTC	181
Configuration 2	American Cylinder Above Handle	105mm CTC, 8.5″ Mounting Hole CTC	183
Configuration 3	American Cylinder Below Handle	92mm CTC, 8.375″ Mounting Hole CTC	185
Configuration 4	Profile Cylinder Below Handle	92mm CTC, 7.875″ Mounting Hole CTC	187
Configuration 5	American Cylinder Above or Below Handle	92mm CTC, 7.5625″ Mounting Hole CTC	189
Configuration 6	American Cylinder Above Handle	92mm CTC, 7.25″ Mounting Hole CTC	191

STEP 3 — CHOOSE YOUR FUNCTION

EXAMPLE # MP004 . xxx . **ACT**

Function Code	Description
ACT	Entry, keyed w/ turnknob (supplied w/ cylinder for 1 ¾″ door thickness)
FDP	Passage, active, no cylinder or turnknob
AIN	Inactive outside and active inside- non-keyed
FD	Inactive, non-keyed
PAT	Patio, non-keyed

STEP 4 — SPECIFY MINUS LEVER OPTION, IF DESIRED:

EXAMPLE # MP004 . xxx . ACT**x**

Add “x” to suffix for minus lever option.
Otherwise trim ships with stock lever choice as shown.

NOTE: Must use specialty multi point screws included in trim box (1336.013.05105).

Examples:

MP001 . 102 . ACT3x

- MP001: Springfield Multi-Point Trim
- 102: 102 (Oil Rubbed Bronze) Finish
- ACT: Active Entry Function
- 3: Door Configuration #3
- x: Minus Lever

MP004 . 402 . PAT4

- MP004: Concord Multi-Point Trim
- 402: 402 (Distressed Oil Rubbed Bronze) Finish
- PAT: Patio Function
- 4: Door Configuration #4

STEP 5 — IF A LEVER OTHER THAN THE STANDARD IS DESIRED

Order a trim without levers and order levers separately.

STEP 6 — IF SPLIT FINISH

Order escutcheons, levers, and corresponding thick door kits separately.

HOW TO ORDER - STEP 1

STEP 1 **PICK YOUR MULTI-POINT TRIM** **EXAMPLE #** **MP004** . XXX . XXXX

MULTI-POINT
TIER 1

Springfield – MP001
5455 lever included

Profile Cylinder Below Handle

American Cylinder Above & Below

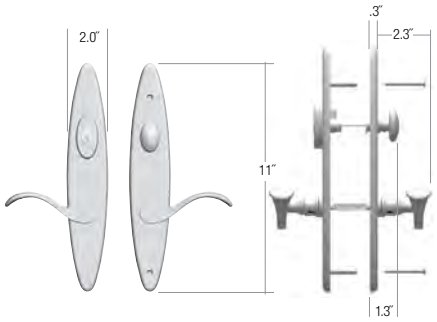

Bismark – MP002
5152 lever included

Profile Cylinder Below Handle

American Cylinder Above & Below

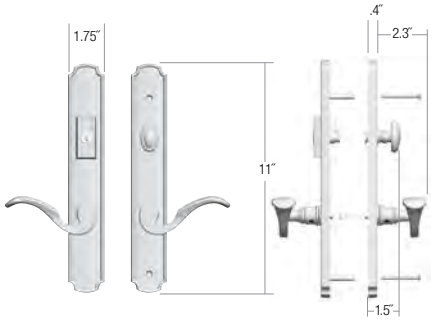

Concord – MP004
5445 lever included

Profile Cylinder Below Handle

American Cylinder Above & Below

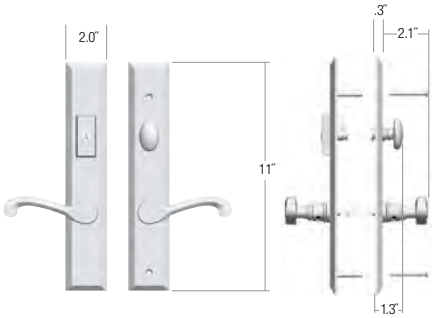

Santa Monica – MP005
L022 lever included

Profile Cylinder Below Handle

American Cylinder Above & Below

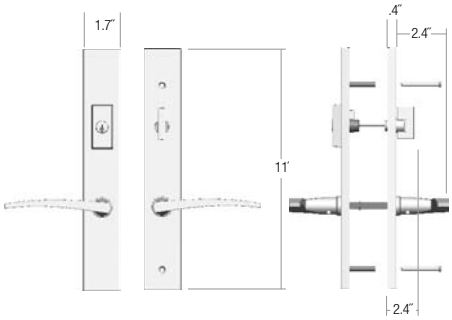

Lakeshore – MP013
5162 lever included

Profile Cylinder Below Handle

American Cylinder Above & Below

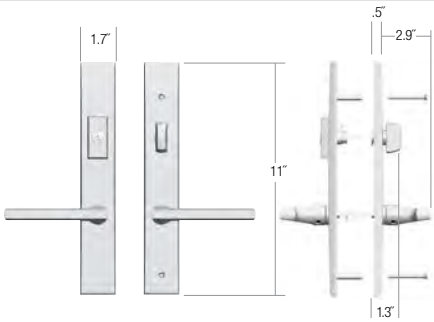

MULTI-POINT

HOW TO ORDER - STEP 1

Cody – MP015
5452 lever included

Profile Cylinder Below Handle

American Cylinder Above & Below

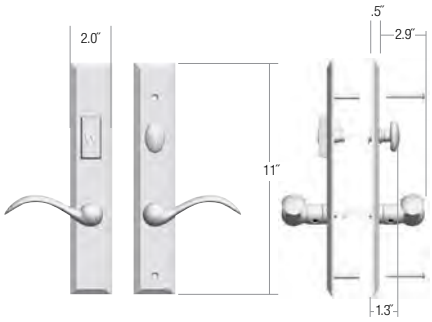

Boulder – MP016
5452 lever included

Profile Cylinder Below Handle

American Cylinder Above & Below

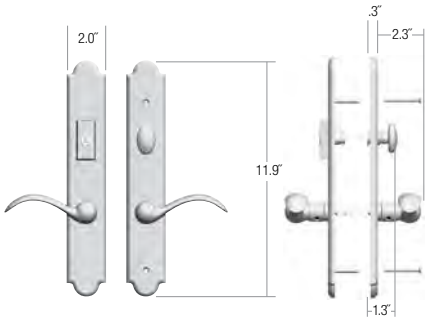

MULTI-POINT

TIER 2

Kensington – MP003
5108 lever included

Profile Cylinder Below Handle

American Cylinder Above & Below

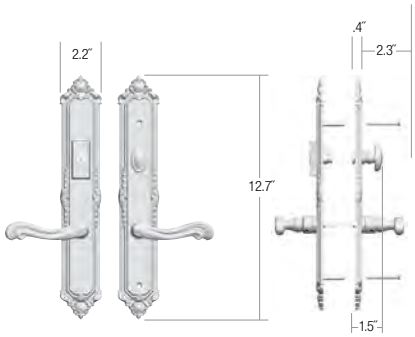

Bristol – MP009
5104 lever included

Profile Cylinder Below Handle

American Cylinder Above & Below

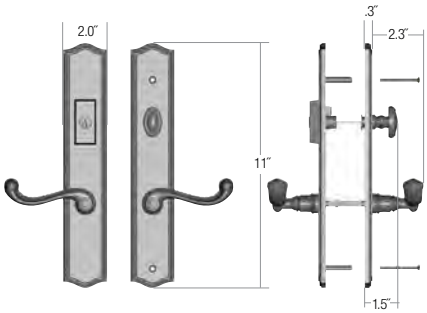

Richland – MP011
5190 lever included

Profile Cylinder Below Handle

American Cylinder Above & Below

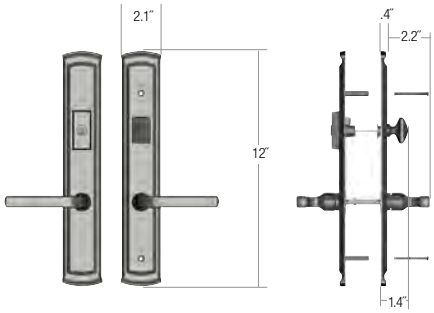

HOW TO ORDER, CONFIGURATION 1

STEP 1 — PICK YOUR MULTI-POINT TRIM

EXAMPLE # **MP004** . xxx . xxxx

STEP 2 — CHOOSE YOUR DOOR CONFIGURATION

EXAMPLE # MP004 . xxx . xxx**1**

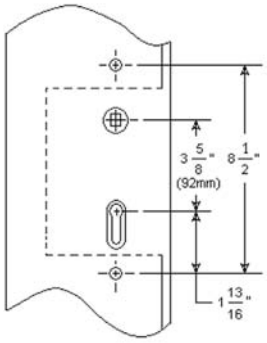

Configuration #	Description
Configuration 1	Profile Cylinder Below Handle — 3 ⅝" (92 mm) center to center 8 ½" center to center mounting hole location

STEP 3 — CHOOSE YOUR FUNCTION — CONFIGURATION #1

EXAMPLE # MP004 . xxx . **ACT**1

ACT1
Entrance Profile Cylinder

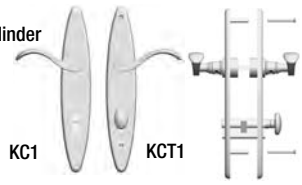

FDP1
Passage

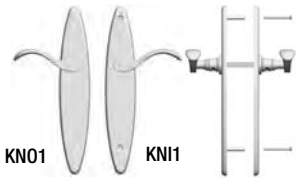

AIN1
Half Inactive/Half Passage

FD1
Full Inactive

PAT1
Patio

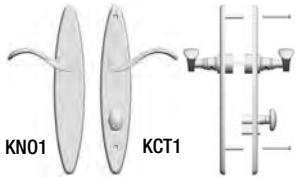

Bismark (MP002), Boulder (MP016), Cody (MP015), Concord (MP004), Lakeshore (MP013), Springfield (MP001), Santa Monica (MP005)

Tier 1

NOTE: Must use specialty multi point screws included in trim box (1336.009).

Item #	Description	003, 031, 033 050, 060, 102 112, 150, 151 190, 260, 264	044, 055, 056 402,452	Without Levers (Denote with "x" at end of SKU) 003, 031, 033 050, 060, 102 112, 150, 151 190, 260, 264	044, 055, 056 402,452
Entrance Profile Cylinder Multi-point					
ACT1	Entry - Keyed W/ Turnknob	$658	$748	$486	$551
Passage Multi-point					
FDP1	Passage - Active No Cylinder or Turnknob	$538	$628	$366	$431
Half Inactive / Half Passage Multi-point					
AIN1	Inactive Outside And Active Inside – Non-keyed	$538	$628	$366	$431
Full Inactive Multi-point					
FD1	Inactive - Non-keyed	$538	$628	$366	$431
Patio Multi-point					
PAT1	Patio - Non-keyed	$538	$628	$366	$431
Multi-point, Escutcheons ONLY					
KNI1	KN, Cut for Knob Inside	$227	$263	—	—
KNIR1	KN, Cut for Knob Inside - Rigid Lever	$227	$263	—	—
KNO1	KN, Cut for Knob Outside	$227	$263	—	—
KNOR1	KN, Cut for Knob Outside - Rigid Lever	$227	$263	—	—
KC1	KC, Cut for Cylinder Outside - Pro C1	$251	$287	—	—
KCT1	KC, Cut for Cylinder Inside - Pro C1	$251	$287	—	—

Kensington (MP003), Bristol (MP009), Richland (MP011)

Tier 2

NOTE: Must use specialty multi point screws included in trim box (1336.009).

Item #	Description	003, 031, 033 050, 060, 102 112, 150, 151 190, 260, 264	044, 055, 056 402,452	Without Levers (Denote with "x" at end of SKU) 003, 031, 033 050, 060, 102 112, 150, 151 190, 260, 264	044, 055, 056 402,452
Entrance Profile Cylinder Multi-point					
ACT1	Entry - Keyed W/ Turnknob	$718	$808	$545	$611
Passage Multi-point					
FDP1	Passage - Active No Cylinder Or Turnknob	$598	$688	$426	$491
Half Inactive / Half Passage Multi-point					
AIN1	Inactive Outside And Active Inside - Non-keyed	$598	$688	$426	$491
Full Inactive Multi-point					
FD1	Inactive - Non-keyed	$598	$688	$426	$491
Patio Multi-point					
PAT1	Patio - Non-keyed	$598	$688	$426	$491
Multi-point, Escutcheons ONLY					
KNI1	KN, Cut for Knob Inside	$251	$287	—	—
KNIR1	KN, Cut for Knob Inside - Rigid Lever	$251	$287	—	—
KNO1	KN, Cut for Knob Outside	$251	$287	—	—
KNOR1	KN, Cut for Knob Outside - Rigid Lever	$251	$287	—	—
KC1	KC, Cut for Cylinder Outside - Pro C1	$276	$311	—	—
KCT1	KC, Cut for Cylinder Inside - Pro C1	$276	$311	—	—

HOW TO ORDER, CONFIGURATION 1

STEP 3 (CONT) **THICK DOOR KIT — CONFIGURATION #1** **EXAMPLE #** **MP000** . XXX . **ACTD**

Thick Door Kits
Tier 1 & Tier 2

	Included w/standard sets						
ACT1	**1 ¾″**	**2″**	**2 ¼″**	**2 ⅜″**	**2 ½″**	**2 ¾″**	**List Price**
All others	MP000.xxx.ACTD	MP000.xxx.ACTD	MP000.xxx.ACTE	MP000.xxx.ACTF	MP000.xxx.ACTG	MP000.xxx.ACTG	$144
Bismark, Kensington, Lakeshore	MP000.xxx.ACTD	MP000.xxx.ACTE	MP000.xxx.ACTE	MP000.xxx.ACTF	MP000.xxx.ACTG	MP000.xxx.ACTI	$144
PAT1	**1 ¾″**	**2″**	**2 ¼″**	**2 ⅜″**	**2 ½″**	**2 ¾″**	
All others	MP000.xxx.PATJ	MP000.xxx.PATJ	MP000.xxx.PATK	MP000.xxx.PATL	MP000.xxx.PATM	MP000.xxx.PATM	$144
Bismark, Kensington, Lakeshore	MP000.xxx.PATJ	MP000.xxx.PATK	MP000.xxx.PATK	MP000.xxx.PATL	MP000.xxx.PATM	MP000.xxx.PATO	$144
AIN Sets	**1 ¾″ – 2 ¼″**			**2 ⅜″ – 2 ¾″**			
	MP000.000.AINS	—	—	MP000.000.AINT	—	—	$31
FD Sets	**1 ¾″ – 2 ¼″**			**2 ⅜″ – 2 ¾″**			
	MP000.000.FDPTP	—	—	MP000.000.FDPTQ	—	—	$31
FDP Sets	**1 ¾″ – 2 ¼″**			**2 ⅜″ – 2 ¾″**			
	MP000.000.FDPTP	—	—	MP000.000.FDPTQ	—	—	$31

>Baldwin Multi-Point Active & Patio trims assume 1.75″ door thickness.
For thicker doors, please order a Thick Door kit according to the chart below. Specify cylinder finish where noted.
>Available cylinder finishes include ONLY 264 (Satin Chrome), 040 (Satin Brass) and 112 (Venetian Bronze).
>See finish chart on page 181 for cylinder finish recommendations.

ACT kits include: 8mm to 7.3mm Conversion Spindle, Keyed Cylinder, and Cylinder Installation Hardware
PAT kits include: 8mm to 7.3mm Conversion Spindle, Patio Cylinder, and Cylinder Installation Hardware
AIN kits include: Half spindle, and Spindle Installation Hardware
FDPTP kits include: 8mm to 7.3mm Conversion Spindle

HOW TO ORDER, CONFIGURATION 2

STEP 1 — PICK YOUR MULTI-POINT TRIM

EXAMPLE # **MP004** . xxx . xxxx

STEP 2 — CHOOSE YOUR DOOR CONFIGURATION

EXAMPLE # MP004 . xxx . xxx**2**

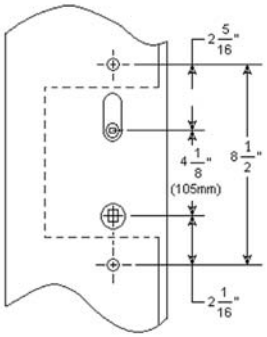

Configuration #	Description
Configuration 2	**American Cylinder Above Handle — 4 ⅛˝ (105 mm) center to center 8 ½˝ center to center mounting hole location**

Note: turn pieces are permanently attached to the Multipoint KT plate and are not interchangeable

STEP 3 — CHOOSE YOUR FUNCTION — CONFIGURATION #2

EXAMPLE # MP004 . xxx . **ACT**2

ACT2
Entrance American Cylinder

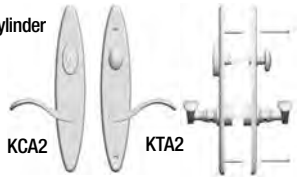

FDP2
Passage

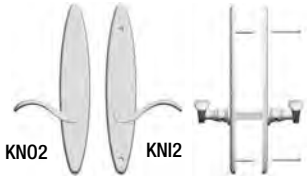

AIN2
Half Inactive/Half Passage

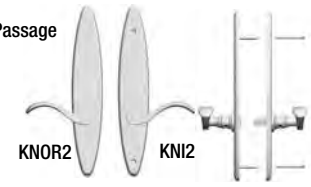

FD2
Full Inactive

PAT2
Patio

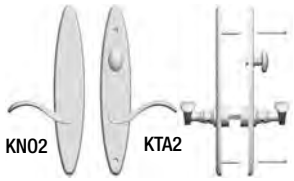

Bismark (MP002), Boulder (MP016), Cody (MP015), Concord (MP004), Lakeshore (MP013), Springfield (MP001), Santa Monica (MP005)
Tier 1

Without Levers
Denote with "x" at end of SKU

NOTE: Must use specialty multi point screws included in trim box (1336.009).

Item #	Description	003, 031, 033 050, 060, 102 112, 150, 151 190, 260, 264	044, 055, 056 402,452	003, 031, 033 050, 060, 102 112, 150, 151 190, 260, 264	044, 055, 056 402,452
Entrance American Cylinder Multi-point					
ACT2	Entry - Keyed W/ Turnknob	$688	$777	$515	$581
Passage Multi-point					
FDP2	Passage - Active No Cylinder Or Turnknob	$538	$628	$366	$431
Half Inactive / Half Passage Multi-point					
AIN2	Inactive Outside And Active Inside - Non-keyed	$538	$628	$366	$431
Full Inactive Multi-point					
FD2	Inactive - Non-keyed	$538	$628	$366	$431
Patio Multi-point					
PAT2	Patio - Non-keyed	$538	$628	$366	$431
Multi-point, Escutcheons ONLY					
KNI2	KN, Cut for Knob Inside	$227	$263	—	—
KNIR2	KN, Cut for Knob Inside - Rigid Lever	$227	$263	—	—
KNO2	KN, Cut for Knob Outside	$227	$263	—	—
KNOR2	KN, Cut for Knob Outside - Rigid Lever	$227	$263	—	—
KCA2	KC, Cut for Cylinder Outside - Ande C2	$263	$300	—	—
KTA2	KT, Cut for Turnpiece Inside - Ande C2	$251	$287	—	—

Kensington (MP003), Bristol (MP009), Richland (MP011)
Tier 2

Without Levers
Denote with "x" at end of SKU

NOTE: Must use specialty multi point screws included in trim box (1336.009).

Item #	Description	003, 031, 033 050, 060, 102 112, 150, 151 190, 260, 264	044, 055, 056 402,452	003, 031, 033 050, 060, 102 112, 150, 151 190, 260, 264	044, 055, 056 402,452
Entrance American Cylinder Multi-point					
ACT2	Entry - Keyed W/ Turnknob	$748	$837	$574	$641
Passage Multi-point					
FDP2	Passage - Active No Cylinder Or Turnknob	$598	$688	$426	$491
Half Inactive / Half Passage Multi-point					
AIN2	Inactive Outside And Active Inside - Non-keyed	$598	$688	$426	$491
Full Inactive Multi-point					
FD2	Inactive - Non-keyed	$598	$688	$426	$491
Patio Multi-point					
PAT2	Patio - Non-keyed	$598	$688	$426	$491
Multi-point, Escutcheons ONLY					
KNI2	KN, Cut for Knob Inside	$251	$287	—	—
KNIR2	KN, Cut for Knob Inside - Rigid Lever	$251	$287	—	—
KNO2	KN, Cut for Knob Outside	$251	$287	—	—
KNOR2	KN, Cut for Knob Outside - Rigid Lever	$251	$287	—	—
KCA2	KC, Cut for Cylinder Outside - Ande C2	$287	$323	—	—
KTA2	KT, Cut for Turnpiece Inside - Ande C2	$276	$311	—	—

HOW TO ORDER, CONFIGURATION 2

STEP 3 (CONT) **THICK DOOR KIT — CONFIGURATION #2** **EXAMPLE #** **MP000** . XXX . **ACTR**

Thick Door Kits
Tier 1 & Tier 2

	Included w/standard sets		
ACT2*	**1 ¾**		**List Price**
	MP000.xxx.ACTR*	—	$138
PAT2	**1 ¾" to 2 ¼"**		
	MP000.000.FDPTP	—	$31
AIN Sets	**1 ¾" to 2 ¼"**	**2 ⅜" to 3"**	
	MP000.000.AINS	MP000.000.AINT	$31
FD Sets	**1 ¾" to 2 ¼"**	**2 ⅜" to 2 ¾"**	
	MP000.000.FDPTP	MP000.000.FDPTQ	$31
FDP Sets	**1 ¾" to 2 ¼"**	**2 ⅜" to 2 ¾"**	
	MP000.000.FDPTP	MP000.000.FDPTQ	$31

>Specify cylinder finish where noted.
>*ACT2 - Finish matches trim exactly (any of the Baldwin Estate finishes)

ACT kits include: 8mm to 7.3mm Conversion Spindle, Keyed Cylinder, and Cylinder Installation Hardware
AIN kits include: Half spindle, and Spindle Installation Hardware
FDPTP kits include: 8mm to 7.3mm Conversion Spindle

HOW TO ORDER, CONFIGURATION 3

STEP 1 — PICK YOUR MULTI-POINT TRIM

EXAMPLE # **MP004** . xxx . xxxx

STEP 2 — CHOOSE YOUR DOOR CONFIGURATION

EXAMPLE # MP004 . xxx . xxx**3**

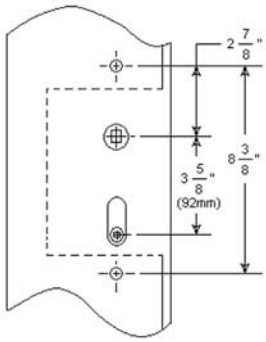

Configuration #	Description
Configuration 3	American Cylinder Below Handle — 3 ⅝" (92 mm) center to center 8 ⅜" center to center mounting hole location

Note: turn pieces are permanently attached to the Multipoint KT plate and are not interchangeable

STEP 3 — CHOOSE YOUR FUNCTION — CONFIGURATION #3

EXAMPLE # MP004 . xxx . **ACT**3

ACT3
Entrance American Cylinder

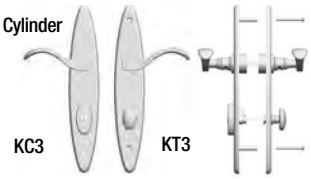

FDP3
Passage

AIN3
Half Inactive/Half Passage

FD3
Full Inactive

PAT3
Patio

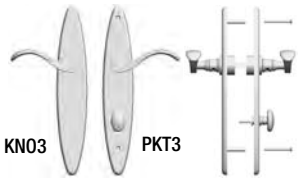

Bismark (MP002), Boulder (MP016), Cody (MP015), Concord (MP004), Lakeshore (MP013), Springfield (MP001), Santa Monica (MP005)
Tier 1

NOTE: Must use specialty multi point screws included in trim box (1336.009).

Item #	Description	003, 031, 033 050, 060, 102 112, 150, 151 190, 260, 264	044, 055, 056 402,452	Without Levers (Denote with "x" at end of SKU) 003, 031, 033 050, 060, 102 112, 150, 151 190, 260, 264	044, 055, 056 402,452
Entrance American Cylinder Multi-point					
ACT3	Entry - Keyed W/ Turnknob	$688	$777	$515	$581
Passage Multi-point					
FDP3	Passage - Active No Cylinder Or Turnknob	$598	$688	$426	$491
Half Inactive / Half Passage Multi-point					
AIN3	Inactive Outside And Active Inside - Non-keyed	$598	$688	$426	$491
Full Inactive Multi-point					
FD3	Inactive - Non-keyed	$598	$688	$426	$491
Patio Multi-point					
PAT3	Patio - Non-keyed	$598	$688	$426	$491
Multi-point, Escutcheons ONLY					
KNI3	KN, Cut for Knob Inside	$227	$263	—	—
KNIR3	KN, Cut for Knob Inside - Rigid Lever	$227	$263	—	—
KNO3	KN, Cut for Knob Outside	$227	$263	—	—
KNOR3	KN, Cut for Knob Outside - Rigid Lever	$227	$263	—	—
KC3	KC, Cut for Cylinder Outside - American C3	$263	$300	—	—
KT3	KT, Cut for Turnpiece Inside - American C3	$251	$287	—	—
PKT3	Patio KT, Cut for Turnpiece Inside - C3	$251	$287	—	—

Kensington (MP003), Bristol (MP009), Richland (MP011)
Tier 2

NOTE: Must use specialty multi point screws included in trim box (1336.009).

Item #	Description	003, 031, 033 050, 060, 102 112, 150, 151 190, 260, 264	044, 055, 056 402,452	Without Levers (Denote with "x" at end of SKU) 003, 031, 033 050, 060, 102 112, 150, 151 190, 260, 264	044, 055, 056 402,452
Entrance American Cylinder Multi-point					
ACT3	Entry - Keyed W/ Turnknob	$748	$838	$574	$641
Passage Multi-point					
FDP3	Passage - Active No Cylinder Or Turnknob	$598	$688	$426	$491
Half Inactive / Half Passage Multi-point					
AIN3	Inactive Outside And Active Inside - Non-keyed	$598	$688	$426	$491
Full Inactive Multi-point					
FD3	Inactive - Non-keyed	$598	$688	$426	$491
Patio Multi-point					
PAT3	Patio - Non-keyed	$598	$688	$426	$491
Multi-point, Escutcheons ONLY					
KNI3	KN, Cut for Knob Inside	$251	$287	—	—
KNIR3	KN, Cut for Knob Inside - Rigid Lever	$251	$287	—	—
KNO3	KN, Cut for Knob Outside	$251	$287	—	—
KNOR3	KN, Cut for Knob Outside - Rigid Lever	$251	$287	—	—
KC3	KC, Cut for Cylinder Outside - American C3	$287	$323	—	—
KT3	KT, Cut for Turnpiece Inside - American C3	$265	$311	—	—
PKT3	Patio KT, Cut for Turnpiece Inside - C3	$265	$311	—	—

HOW TO ORDER, CONFIGURATION 3

STEP 3 (CONT) THICK DOOR KIT — CONFIGURATION #3

EXAMPLE # **MP000** . XXX . **ACTA**

Thick Door Kits
Tier 1 & Tier 2

	Included w/standard sets			
ACT3	**1 ¾″ to 2 ¼″**	**2 ⅜″ to 2 ½″**	**2 ¾″**	**List Price**
	MP000.xxx.ACTA	MP000.xxx.ACTB	MP000.xxx.ACTC	$138
PAT3	**1 ¾″ to 2 ¼″**	**2 ⅜″ to 2 ¾″**		
	MP000.000.FDPTP	MP000.000.FDPTQ	—	$31
AIN Sets	**1 ¾″ to 2 ¼″**	**2 ⅜″ to 2 ¾″**		
	MP000.000.AINS	MP000.000.AINT	—	$31
FD Sets	**1 ¾″ to 2 ¼″**	**2 ⅜″ to 2 ¾″**		
	MP000.000.FDPTP	MP000.000.FDPTQ	—	$31
FDP Sets	**1 ¾″ to 2 ¼″**	**2 ⅜″ to 2 ¾″**		
	MP000.000.FDPTP	MP000.000.FDPTQ	—	$31

> Config #3 Multi-Point come standard for 1 3/4" to 2 1/4" door thickness. For thicker doors, please order a Thick Door kit according to the chart above.
> Specify cylinder finish where noted. Available cylinder finishes include 264 (Satin Chrome) and 040 (Satin Brass) ONLY.
> See finish chart on page 181 for cylinder finish recommendations.

ACT kits include: 8mm to 7.3mm Conversion Spindle, Keyed Cylinder, and Cylinder Installation Hardware
PAT kits include: 8mm to 7.3mm Conversion Spindle
AIN kits include: Half spindle, and Spindle Installation Hardware
FDPTP kits include: 8mm to 7.3mm Conversion Spindle

HOW TO ORDER, CONFIGURATION 4

STEP 1 — PICK YOUR MULTI-POINT TRIM

EXAMPLE # **MP004** . xxx . xxxx

STEP 2 — CHOOSE YOUR DOOR CONFIGURATION

EXAMPLE # MP004 . xxx . xxx**4**

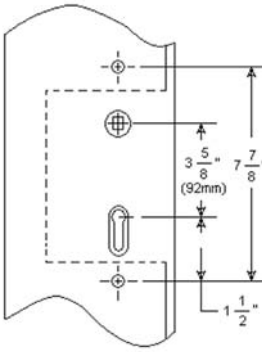

Configuration #	Description
Configuration 4	Profile Cylinder Below Handle — 3 ⅝" (92 mm) center to center 7 ⅞" center to center mounting hole location

STEP 3 — CHOOSE YOUR FUNCTION — CONFIGURATION #4

EXAMPLE # MP004 . xxx . **ACT**4

ACT4
Entrance Profile Cylinder

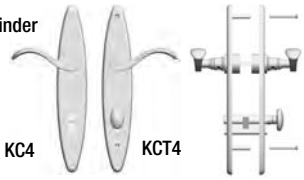

FDP4
Passage

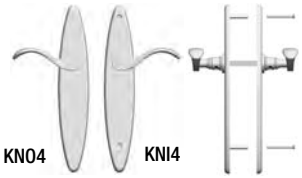

AIN4
Half Inactive/Half Passage

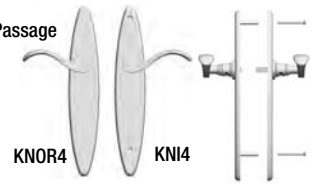

FD4
Full Inactive

PAT4
Patio

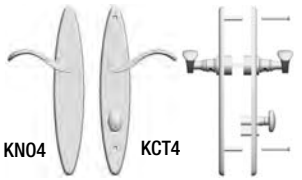

Bismark (MP002), Boulder (MP016), Cody (MP015), Concord (MP004), Lakeshore (MP013), Springfield (MP001), Santa Monica (MP005)
Tier 1

Without Levers
Denote with "x" at end of SKU

NOTE: Must use specialty multi point screws included in trim box (1336.009).

Item #	Description	003, 031, 033 050, 060, 102 112, 150, 151 190, 260, 264	044, 055, 056 402,452	003, 031, 033 050, 060, 102 112, 150, 151 190, 260, 264	044, 055, 056 402,452
Entrance Profile Cylinder Multi-point					
ACT4	Entry - Keyed W/ Turnknob	$658	$748	$486	$551
Passage Multi-point					
FDP4	Passage - Active No Cylinder Or Turnknob	$538	$628	$366	$431
Half Inactive / Half Passage Multi-point					
AIN4	Inactive Outside And Active Inside - Non-keyed	$538	$628	$366	$431
Full Inactive Multi-point					
FD4	Inactive - Non-keyed	$538	$628	$366	$431
Patio Multi-point					
PAT4	Patio - Non-keyed	$538	$628	$366	$431
Multi-point, Escutcheons ONLY					
KNI4	KN, Cut for Knob Inside	$227	$263	—	—
KNIR4	KN, Cut for Knob Inside - Rigid Lever	$227	$263	—	—
KNO4	KN, Cut for Knob Outside	$227	$263	—	—
KNOR4	KN, Cut for Knob Outside - Rigid Lever	$227	$263	—	—
KC4	KC, Cut for Cylinder Outside - Pro C4	$251	$287	—	—
KCT4	KC, Cut for Cylinder Inside - Pro C4	$251	$287	—	—

Kensington (MP003), Bristol (MP009), Richland (MP011)
Tier 2

Without Levers
Denote with "x" at end of SKU

NOTE: Must use specialty multi point screws included in trim box (1336.013.05105).

Item #	Description	003, 031, 033 050, 060, 102 112, 150, 151 190, 260, 264	044, 055, 056 402,452	003, 031, 033 050, 060, 102 112, 150, 151 190, 260, 264	044, 055, 056 402,452
Entrance Profile Cylinder Multi-point					
ACT4	Entry - Keyed W/ Turnknob	$718	$808	$545	$611
Passage Multi-point					
FDP4	Passage - Active No Cylinder Or Turnknob	$598	$688	$426	$491
Half Inactive / Half Passage Multi-point					
AIN4	Inactive Outside And Active Inside - Non-keyed	$598	$688	$426	$491
Full Inactive Multi-point					
FD4	Inactive - Non-keyed	$598	$688	$426	$491
Patio Multi-point					
PAT4	Patio - Non-keyed	$598	$688	$426	$491
Multi-point, Escutcheons ONLY					
KNI4	KN, Cut for Knob Inside	$251	$287	—	—
KNIR4	KN, Cut for Knob Inside - Rigid Lever	$251	$287	—	—
KNO4	KN, Cut for Knob Outside	$251	$287	—	—
KNOR4	KN, Cut for Knob Outside - Rigid Lever	$251	$287	—	—
KC4	KC, Cut for Cylinder Outside - Pro C4	$276	$311	—	—
KCT4	KC, Cut for Cylinder Inside - Pro C4	$276	$311	—	—

HOW TO ORDER, CONFIGURATION 4

STEP 3 (CONT) **THICK DOOR KIT — CONFIGURATION #4** **EXAMPLE #** **MP000** . XXX . **ACTD**

Thick Door Kits
Tier 1 & Tier 2

	Included w/standard sets						
ACT4	**1 ¾″**	**2″**	**2 ¼″**	**2 ⅜″**	**2 ½″**	**2 ¾″**	**List Price**
All others	MP000.xxx.ACTD	MP000.xxx.ACTD	MP000.xxx.ACTE	MP000.xxx.ACTF	MP000.xxx.ACTG	MP000.xxx.ACTG	$144
Bismark, Kensington, Lakeshore	MP000.xxx.ACTD	MP000.xxx.ACTE	MP000.xxx.ACTE	MP000.xxx.ACTF	MP000.xxx.ACTG	MP000.xxx.ACTI	$144
PAT4	**1 ¾″**	**2″**	**2 ¼″**	**2 ⅜″**	**2 ½″**	**2 ¾″**	
All others	MP000.xxx.PATJ	MP000.xxx.PATJ	MP000.xxx.PATK	MP000.xxx.PATL	MP000.xxx.PATM	MP000.xxx.PATM	$144
Bismark, Kensington, Lakeshore	MP000.xxx.PATJ	MP000.xxx.PATK	MP000.xxx.PATK	MP000.xxx.PATL	MP000.xxx.PATM	MP000.xxx.PATO	$144
AIN Sets	**1 ¾″ to 2 ¼″**			**2 ⅜″ to 2 ¾″**			
	MP000.000.AINS	—	—	MP000.000.AINT	—	—	$31
FD Sets	**1 ¾″ to 2 ¼″**			**2 ⅜″ to 2 ¾″**			
	MP000.000.FDPTP	—	—	MP000.000.FDPTQ	—	—	$31
FDP Sets	**1 ¾″ to 2 ¼″**			**2 ⅜″ to 2 ¾″**			
	MP000.000.FDPTP	—	—	MP000.000.FDPTQ	—	—	$31

> Config #4 Multi-Point Active and Patio trims assume 1.75″ door thickness. For thicker doors, please order a Thick Door kit according to the chart above. Specify cylinder finish where noted.
> Available cylinder finishes include ONLY 264 (Satin Chrome), 040 (Satin Brass) and 112 (Venetian Bronze).
> See finish chart on page 177 for cylinder finish recommendations.

ACT kits include: 8mm to 7.3mm Conversion Spindle, Keyed Cylinder, and Cylinder Installation Hardware
PAT kits include: 8mm to 7.3mm Conversion Spindle, Patio Cylinder and Cylinder Installation Hardware
AIN kits include: Half spindle, and Spindle Installation Hardware
FDPTP kits include: 8mm to 7.3mm Conversion Spindle

HOW TO ORDER, CONFIGURATION 5

STEP 1 — PICK YOUR MULTI-POINT TRIM

EXAMPLE # **MP004** . xxx . xxxx

STEP 2 — CHOOSE YOUR DOOR CONFIGURATION

EXAMPLE # MP004 . xxx . xxx**5**

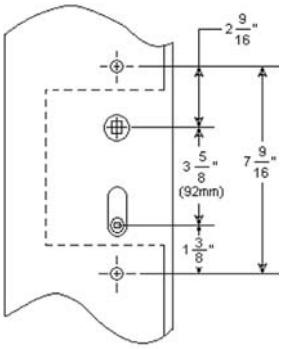

Configuration #	Description
Configuration 5	American Cylinder Above or Below Handle — 3 ⅝" (92 mm) center to center 7 9/16" center to center mounting hole location

STEP 3 — CHOOSE YOUR FUNCTION — CONFIGURATION #5

EXAMPLE # MP004 . xxx . **ACT**5

ACT5
Entrance American Cylinder

FDP5
Passage

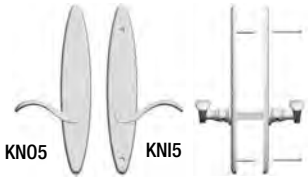

AIN5
Half Inactive/Half Passage

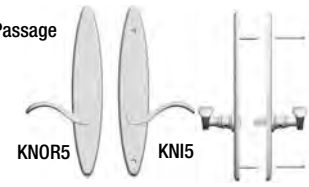

FD5
Full Inactive

PAT5
Patio

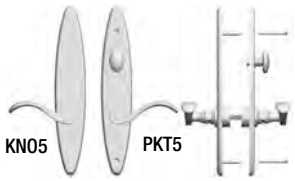

Bismark (MP002), Boulder (MP016), Cody (MP015), Concord (MP004), Lakeshore (MP013), Springfield (MP001), Santa Monica (MP005)
Tier 1

Without Levers
Denote with "x" at end of SKU

NOTE: Must use specialty multi point screws included in trim box (1336.009).

Item #	Description	003, 031, 033 050, 060, 102 112, 150, 151 190, 260, 264	044, 055, 056 402,452	003, 031, 033 050, 060, 102 112, 150, 151 190, 260, 264	044, 055, 056 402,452
Entrance American Cylinder Multi-point					
ACT5	Entry - Keyed W/ Turnknob	$688	$777	$515	$581
Passage Multi-point					
FDP5	Passage - Active No Cylinder Or Turnknob	$538	$628	$366	$431
Half Inactive / Half Passage Multi-point					
AIN5	Inactive Outside And Active Inside - Non-keyed	$538	$628	$366	$431
Full Inactive Multi-point					
FD5	Inactive - Non-keyed	$538	$628	$366	$431
Patio Multi-point					
PAT5	Patio - Non-keyed	$538	$628	$366	$431
Multi-point, Escutcheons ONLY					
KNI5	KN, Cut for Knob Inside	$227	$263	—	—
KNIR5	KN, Cut for Knob Inside - Rigid Lever	$227	$263	—	—
KNO5	KN, Cut for Knob Outside	$227	$263	—	—
KNOR5	KN, Cut for Knob Outside - Rigid Lever	$227	$263	—	—
KC5	KC, Cut for Cylinder Outside - American C5	$263	$300	—	—
KT5	KT, Cut for Turnpiece Inside - American C5	$251	$287	—	—
PKT5	Patio KT, Cut for Turnpiece Inside - C5	$251	$287	—	—

Kensington (MP003), Bristol (MP009), Richland (MP011)
Tier 2

Without Levers
Denote with "x" at end of SKU

NOTE: Must use specialty multi point screws included in trim box (1336.009).

Item #	Description	003, 031, 033 050, 060, 102 112, 150, 151 190, 260, 264	044, 055, 056 402,452	003, 031, 033 050, 060, 102 112, 150, 151 190, 260, 264	044, 055, 056 402,452
Entrance American Cylinder Multi-point					
ACT5	Entry - Keyed W/ Turnknob	$748	$837	$574	$641
Passage Multi-point					
FDP5	Passage - Active No Cylinder Or Turnknob	$598	$688	$426	$491
Half Inactive / Half Passage Multi-point					
AIN5	Inactive Outside And Active Inside - Non-keyed	$598	$688	$426	$491
Full Inactive Multi-point					
FD5	Inactive - Non-keyed	$598	$688	$426	$491
Patio Multi-point					
PAT5	Patio - Non-keyed	$598	$688	$426	$491
Multi-point, Escutcheons ONLY					
KNI5	KN, Cut for Knob Inside	$251	$287	—	—
KNIR5	KN, Cut for Knob Inside - Rigid Lever	$251	$287	—	—
KNO5	KN, Cut for Knob Outside	$251	$287	—	—
KNOR5	KN, Cut for Knob Outside - Rigid Lever	$251	$287	—	—
KC5	KC, Cut for Cylinder Outside - American C5	$287	$323	—	—
KT5	KT, Cut for Turnpiece Inside - American C5	$276	$311	—	—
PKT5	Patio KT, Cut for Turnpiece Inside - C5	$276	$311	—	—

NOTE: #5 cylinder to spindle orientation is reversible, works for both above and below handle mounting.

HOW TO ORDER, CONFIGURATION 5

STEP 3 (CONT) THICK DOOR KIT — CONFIGURATION #5

EXAMPLE # **MP000** . XXX . **ACTA**

Thick Door Kits
Tier 1 & Tier 2

	Included w/standard sets			
ACT5	**1 ¾″ to 2 ¼″**	**2 ⅜″ to 2 ½″**	**2 ¾″**	**List Price**
	MP000.xxx.ACTA	MP000.xxx.ACTB	MP000.xxx.ACTC	$138
PAT5	**1 ¾″ to 2 ¼″**	**2 ⅜″ to 2 ¾″**		
	MP000.000.FDPTP	MP000.000.FDPTQ	—	$31
AIN Sets	**1 ¾″ to 2 ¼″**	**2 ⅜″ to 2 ¾″**		
	MP000.000.AINS	MP000.000.AINT	—	$31
FD Sets	**1 ¾″ to 2 ¼″**	**2 ⅜″ to 2 ¾″**		
	MP000.000.FDPTP	MP000.000.FDPTQ	—	$31
FDP Sets	**1 ¾″ to 2 ¼″**	**2 ⅜″ to 2 ¾″**		
	MP000.000.FDPTP	MP000.000.FDPTQ	—	$31

>Config #5 Multi-Point trims come standard for 1 3/4" to 2 1/4"door thickness. For thicker doors, please order a Thick Door kit according to the chart above. Specify cylinder finish where noted.
>Available cylinder finishes include 264 (Satin Chrome) and 040 (Satin Brass) ONLY.
>See finish chart on page 181 for cylinder finish recommendations.

ACT kits include: 8mm to 7.3mm Conversion Spindle, Keyed Cylinder, and Cylinder Installation Hardware
PAT kits include: 8mm to 7.3mm Conversion Spindle
AIN kits include: Half spindle, and Spindle Installation Hardware
FDPTP kits include: 8mm to 7.3mm Conversion Spindle

HOW TO ORDER, CONFIGURATION 6

STEP 1 — PICK YOUR MULTI-POINT TRIM

EXAMPLE # **MP004** . xxx . xxxx

STEP 2 — CHOOSE YOUR DOOR CONFIGURATION

EXAMPLE # MP004 . xxx . xxx**6**

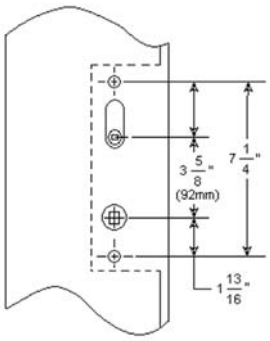

Configuration #	Description
Configuration 6	**American Cylinder Above Handle — 3 ⅝" (92 mm) center to center 7 ¼" center to center mounting hole location**

Note: turn pieces are permanently attached to the Multipoint KT plate and are not interchangeable

STEP 3 — CHOOSE YOUR FUNCTION — CONFIGURATION #6

EXAMPLE # MP004 . xxx . **ACT**6

ACT6
Entrance American Cylinder

FDP6
Passage

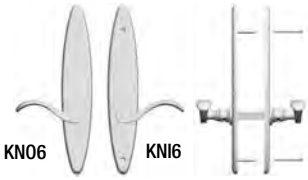

AIN6
Half Inactive/Half Passage

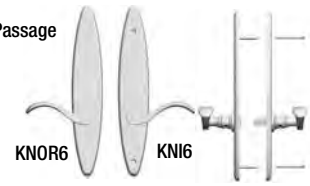

FD6
Full Inactive

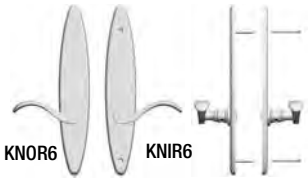

PAT6
Patio

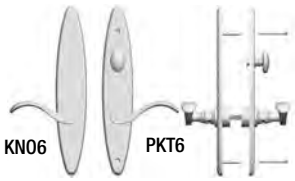

Bismark (MP002), Boulder (MP016), Cody (MP015), Concord (MP004), Lakeshore (MP013), Springfield (MP001), Santa Monica (MP005)
Tier 1

Without Levers
Denote with "x" at end of SKU

NOTE: Must use specialty multi point screws included in trim box (1336.009).

Item #	Description	003, 031, 033 050, 060, 102 112, 150, 151 190, 260, 264	044, 055, 056 402,452	003, 031, 033 050, 060, 102 112, 150, 151 190, 260, 264	044, 055, 056 402,452
Entrance American Cylinder Multi-point					
ACT6	Entry - Keyed W/ Turnknob	$688	$777	$515	$581
Passage Multi-point					
FDP6	Passage - Active No Cylinder Or Turnknob	$538	$628	$366	$431
Half Inactive / Half Passage Multi-point					
AIN6	Inactive Outside And Active Inside - Non-keyed	$538	$628	$366	$431
Full Inactive Multi-point					
FD6	Inactive - Non-keyed	$538	$628	$366	$431
Patio Multi-point					
PAT6	Patio - Non-keyed	$538	$628	$366	$431
Multi-point, Escutcheons ONLY					
KNI6	KN, Cut for Knob Inside	$227	$263	—	—
KNIR6	KN, Cut for Knob Inside - Rigid Lever	$227	$263	—	—
KNO6	KN, Cut for Knob Outside	$227	$263	—	—
KNOR6	KN, Cut for Knob Outside - Rigid Lever	$227	$263	—	—
KC6	KC, Cut for Cylinder Outside - American C6	$263	$300	—	—
KT6	KT, Cut for Turnpiece Inside - American C6	$251	$287	—	—
PKT6	Patio KT, Cut for Turnpiece Inside - C6	$251	$287	—	—

Kensington (MP003), Bristol (MP009), Richland (MP011)
Tier 2

Without Levers
Denote with "x" at end of SKU

NOTE: Must use specialty multi point screws included in trim box (1336.009).

Item #	Description	003, 031, 033 050, 060, 102 112, 150, 151 190, 260, 264	044, 055, 056 402,452	003, 031, 033 050, 060, 102 112, 150, 151 190, 260, 264	044, 055, 056 402,452
Entrance American Cylinder Multi-point					
ACT6	Entry - Keyed W/ Turnknob	$748	$837	$574	$641
Passage Multi-point					
FDP6	Passage - Active No Cylinder Or Turnknob	$598	$688	$426	$491
Half Inactive / Half Passage Multi-point					
AIN6	Inactive Outside And Active Inside - Non-keyed	$598	$688	$426	$491
Full Inactive Multi-point					
FD6	Inactive - Non-keyed	$598	$688	$426	$491
Patio Multi-point					
PAT6	Patio - Non-keyed	$598	$688	$426	$491
Multi-point, Escutcheons ONLY					
KNI6	KN, Cut for Knob Inside	$251	$287	—	—
KNIR6	KN, Cut for Knob Inside - Rigid Lever	$251	$287	—	—
KNO6	KN, Cut for Knob Outside	$251	$287	—	—
KNOR6	KN, Cut for Knob Outside - Rigid Lever	$251	$287	—	—
KC6	KC, Cut for Cylinder Outside - American C6	$287	$323	—	—
KT6	KT, Cut for Turnpiece Inside - American C6	$276	$311	—	—
PKT6	Patio KT, Cut for Turnpiece Inside - C6	$276	$311	—	—

HOW TO ORDER, CONFIGURATION 6

STEP 3 (CONT) THICK DOOR KIT — CONFIGURATION #6

EXAMPLE # **MP000** . XXX . **ACTA**

Thick Door Kits
Tier 1 & Tier 2

	Included w/standard sets			
ACT6	**1 ¾″ to 2 ¼″**	**2 ⅜″ to 2 ½″**	**2 ¾″**	**List Price**
	MP000.xxx.ACTA	MP000.xxx.ACTB	MP000.xxx.ACTC	$144
PAT6	**1 ¾″ to 2 ¼″**	**2 ⅜″ to 2 ¾″**		
	MP000.000.FDPTP	MP000.000.FDPTQ	—	$31
AIN Sets	**1 ¾″ to 2 ¼″**	**2 ⅜″ to 2 ¾″**		
	MP000.000.AINS	MP000.000.AINT	—	$31
FD Sets	**1 ¾″ to 2 ¼″**	**2 ⅜″ to 2 ¾″**		
	MP000.000.FDPTP	MP000.000.FDPTQ	—	$31
FDP Sets	**1 ¾″ to 2 ¼″**	**2 ⅜″ to 2 ¾″**		
	MP000.000.FDPTP	MP000.000.FDPTQ	—	$31

>Config #6 Multi-Point trims come standard for 1 3/4″ to 2 1/4” door thickness. For thicker doors, please order a Thick Door kit according to the chart above. Specify cylinder finish where noted.
>Available cylinder finishes include 264 (Satin Chrome) and 040 (Satin Brass) ONLY.
>See finish chart on page 181 for cylinder finish recommendations.

ACT kits include: 8mm to 7.3mm Conversion Spindle, Keyed Cylinder, and Cylinder Installation Hardware
PAT kits include: 8mm to 7.3mm Conversion Spindle
AIN kits include: Half spindle, and Spindle Installation Hardware
FDPTP kits include: 8mm to 7.3mm Conversion Spindle

HOW TO ORDER, EUROPEAN MORTISE

STEP 1 PICK YOUR MORTISE TRIM

EXAMPLE # **MP004** . xxx . xxxx

Trim Code	Description
MP001	Springfield European Mortise Trim
MP002	Bismark European Mortise Trim
MP003	Kensington European Mortise Trim
MP004	Concord European Mortise Trim
MP009	Bristol European Mortise Trim
MP011	Richland European Mortise Trim
MP013	Lakeshore European Mortise Trim
MP015	Cody European Mortise Trim
MP016	Boulder European Mortise Trim

STEP 2 CHOOSE YOUR DOOR CONFIGURATION

EXAMPLE # MP004 . xxx . xxx**7**

Configuration #	Description	Measurement	Page
Configuration 7	European Mortise	72mm CTC,	199
Configuration 8	European Mortise	85mm CTC,	201

STEP 3 CHOOSE YOUR FUNCTION

EXAMPLE # MP004 . xxx . **ACT**

Function Code	Description
ACT	Entry, keyed w/ turnknob (supplied w/ cylinder for 1 ¾″ door thickness)
FDP	Passage, active, no cylinder or turnknob
AIN	Inactive outside and active inside- non-keyed
FD	Inactive, non-keyed
PAT	Patio, non-keyed

STEP 4 SPECIFY MINUS LEVER OPTION, IF DESIRED:

EXAMPLE # MP004 . xxx . ACT**x**

Add "x" to suffix for minus lever option.
Otherwise trim ships with stock lever choice as shown.

Examples:

MP001 . 102 . ACT7x

- MP001: Springfield European Mortise Trim
- 102: 102 (Oil Rubbed Bronze) Finish
- ACT: Active Entry Function
- 7: Door Configuration #7
- x: Minus Lever

MP004 . 402 . PAT8

- MP004: Concord European Mortise Trim
- 402: 402 (Distressed Oil Rubbed Bronze) Finish
- PAT: Patio Function
- 8: Door Configuration #8

STEP 5 IF A LEVER OTHER THAN THE STANDARD IS DESIRED

Order a trim without levers and order levers separately.

STEP 6 IF SPLIT FINISH, ORDER COMPONENTS SEPARATELY

Escutcheon, lever, kit will be priced separately

RECOMMENDED CYLINDER FINISHES

RECOMMENDED FINISHES	ORIGINAL FINISHES
040	003, 031, 033, 044, 060, 050
112	102, 190, 402, 112
264	055, 056, 150, 151, 260, 264, 452

HOW TO ORDER, STEP 1

STEP 1 **PICK YOUR MORTISE TRIM** EXAMPLE # **MP004** . XXX . XXXX

Mortise – Tier 1

Bismark – MP002
5152 lever included

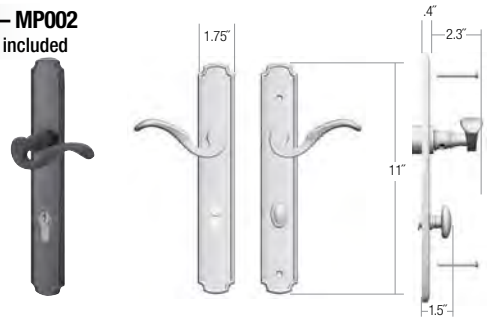

Boulder – MP016
5452V lever included

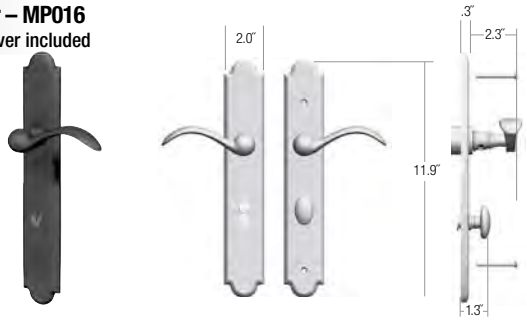

Cody – MP015
5452 lever included

Concord – MP004
5445V lever included

Lakeshore – MP013
5162 lever included

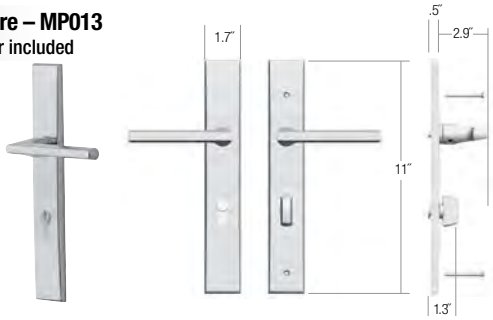

Springfield – MP001
5455V lever included

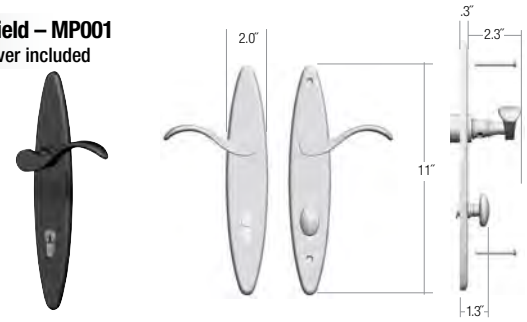

Mortise – Tier 2

Kensington – MP003
5108 lever included

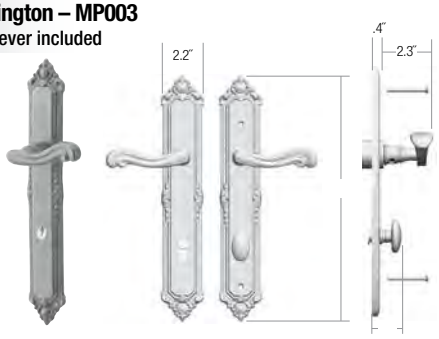

Bristol – MP009
5104 lever included

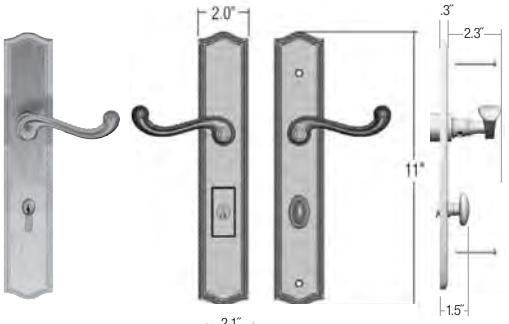

Richland – MP011
5190 lever included

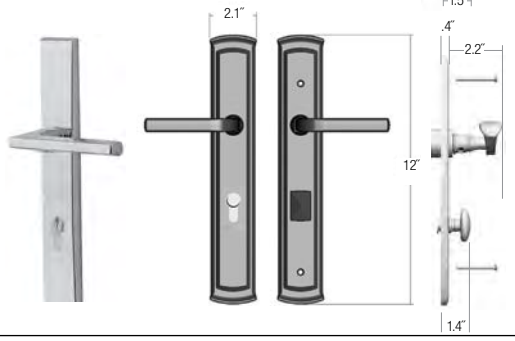

MULIT-POINT

HOW TO ORDER, CONFIGURATION 7

STEP 1 — PICK YOUR MORTISE TRIM

EXAMPLE # **MP004** . xxx . xxxx

STEP 2 — CHOOSE YOUR DOOR CONFIGURATION

EXAMPLE # MP004 . xxx . xxx**7**

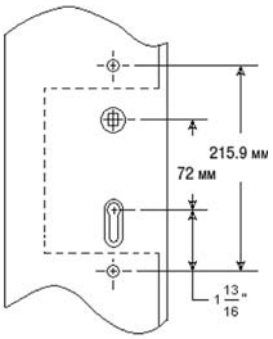

Configuration #	Description
Configuration 7	European Mortise Cylinder — 72mm center to center 215.9 mm center to center mounting hole location

STEP 3 — CHOOSE YOUR FUNCTION — CONFIGURATION #7

EXAMPLE # MP004 . xxx . **ACT**7

ACT7
Entrance Mortise Cylinder

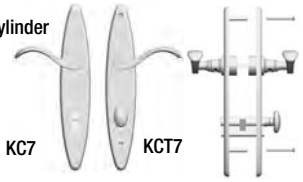

FDP7
Passage

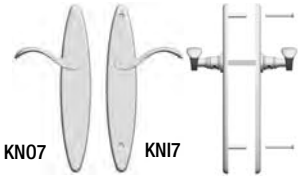

FD7
Full Inactive

PAT7
Patio

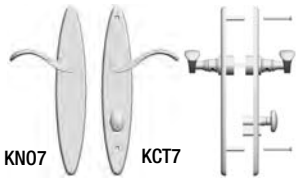

Bismark (MP002), Boulder (MP016), Cody (MP015), Concord (MP004), Lakeshore (MP013), Springfield (MP001)
Tier 1

Without Levers
Denote with "x" at end of SKU

NOTE: Must use specialty multi point screws included in trim box (1336.009).

Item #	Description	003, 031, 033 050, 060, 102 112, 150, 151 190, 260, 264	044, 055, 056 402, 452	003, 031, 033 050, 060, 102 112, 150, 151 190, 260, 264	044, 055, 056 402, 452
Entrance Mortise Cylinder European Mortise					
ACT7	Entry - Keyed W/ Turnknob	$658	$748	$486	$551
Passage European Mortise					
FDP7	Passage - Active No Cylinder Or Turnknob	$538	$625	$366	$431
Full Inactive European Mortise					
FD7	Inactive - Non-keyed	$538	$625	$366	$431
Patio European Mortise					
PAT7	Patio - Non-keyed	$538	$625	$366	$431
Escutcheons ONLY					
KNI7	KN, Cut for Knob Inside	$227	$263	—	—
KNIR7	KN, Cut for Knob Inside - Rigid Lever	$227	$263	—	—
KNO7	KN, Cut for Knob Outside	$227	$263	—	—
KNOR7	KN, Cut for Knob Outside - Rigid Lever	$227	$263	—	—
KC7	KC, Cut for Cylinder Outside - Pro C1	$251	$287	—	—
KCT7	KC, Cut for Cylinder Inside - Pro C1	$251	$287	—	—

Kensington (MP003), Bristol (MP009), Richland (MP011)
Tier 2

Without Levers
Denote with "x" at end of SKU

NOTE: Must use specialty multi point screws included in trim box (1336.009).

Item #	Description	003, 031, 033 050, 060, 102 112, 150, 151 190, 260, 264	044, 055, 056 402, 452	003, 031, 033 050, 060, 102 112, 150, 151 190, 260, 264	044, 055, 056 402, 452
Entrance Mortise Cylinder European Mortise					
ACT7	Entry - Keyed W/ Turnknob	$718	$808	$545	$611
Passage European Mortise					
FDP7	Passage - Active No Cylinder Or Turnknob	$598	$688	$426	$491
Full Inactive European Mortise					
FD7	Inactive - Non-keyed	$598	$688	$426	$491
Patio European Mortise					
PAT7	Patio - Non-keyed	$598	$688	$426	$491
Escutcheons ONLY					
KNI7	KN, Cut for Knob Inside	$251	$287	—	—
KNIR7	KN, Cut for Knob Inside - Rigid Lever	$251	$287	—	—
KNO7	KN, Cut for Knob Outside	$251	$287	—	—
KNOR7	KN, Cut for Knob Outside - Rigid Lever	$251	$287	—	—
KC7	KC, Cut for Cylinder Outside - Pro C1	$276	$311	—	—
KCT7	KC, Cut for Cylinder Inside - Pro C1	$276	$311	—	—

HOW TO ORDER, CONFIGURATION 7

STEP 3 (CONT) **THICK DOOR KIT — CONFIGURATION #7** **EXAMPLE #** **MP000** . XXX . **ACTD**

Thick Door Kits
Tier 1 & Tier 2

	Included w/standard sets						
ACT1	**1 ¾″**	**2″**	**2 ¼″**	**2 ⅜″**	**2 ½″**	**2 ¾″**	**List Price**
All others	MP000.xxx.ACTD	MP000.xxx.ACTD	MP000.xxx.ACTE	MP000.xxx.ACTF	MP000.xxx.ACTG	MP000.xxx.ACTG	$144
Bismark, Kensington, Lakeshore	MP000.xxx.ACTD	MP000.xxx.ACTE	MP000.xxx.ACTE	MP000.xxx.ACTF	MP000.xxx.ACTG	MP000.xxx.ACTI	$144
PAT1	**1 ¾″**	**2″**	**2 ¼″**	**2 ⅜″**	**2 ½″**	**2 ¾″**	
All others	MP000.xxx.PATJ	MP000.xxx.PATJ	MP000.xxx.PATK	MP000.xxx.PATL	MP000.xxx.PATM	MP000.xxx.PATM	$144
Bismark, Kensington, Lakeshore	MP000.xxx.PATJ	MP000.xxx.PATK	MP000.xxx.PATK	MP000.xxx.PATL	MP000.xxx.PATM	MP000.xxx.PATO	$144
FD Sets	**1 ¾″ to 2 ¼″**			**2 ⅜″ to 2 ¾″**			
	MP000.000.FDPTP	—	—	MP000.000.FDPTQ	—	—	$31
FDP Sets	**1 ¾″ to 2 ¼″**			**2 ⅜″ to 2 ¾″**			
	MP000.000.FDPTP	—	—	MP000.000.FDPTQ	—	—	$31

> Baldwin European Mortise trims assume 1.75″ door thickness.
> For thicker doors, please order a Thick Door kit according to the chart below.
Specify cylinder finish where noted.
> Available cylinder finishes include ONLY 264 (Satin Chrome), 040 (Satin Brass) and 112 (Venetian Bronze).
> See finish chart on page 181 for cylinder finish recommendations.

ACT kits include: 8mm to 7.3mm Conversion Spindle, Keyed Cylinder, and Cylinder Installation Hardware
PAT kits include: 8mm to 7.3mm Conversion Spindle, Patio Cylinder, and Cylinder Installation Hardware
FDPTP kits include: 8mm to 7.3mm Conversion Spindle

HOW TO ORDER, CONFIGURATION 8

STEP 1 — PICK YOUR MORTISE TRIM

EXAMPLE # **MP004** . xxx . xxxx

STEP 2 — CHOOSE YOUR DOOR CONFIGURATION

EXAMPLE # MP004 . xxx . xxx**8**

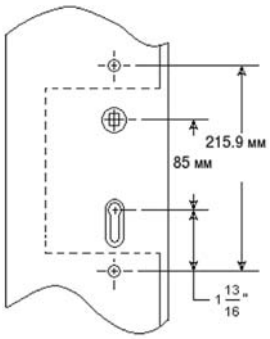

Configuration #	Description
Configuration 8	European Mortise Cylinder — 85mm center to center 215.9 mm center to center mounting hole location

STEP 3 — CHOOSE YOUR FUNCTION — CONFIGURATION #8

EXAMPLE # MP004 . xxx . **ACT**8

ACT8
Entrance Mortise Cylinder

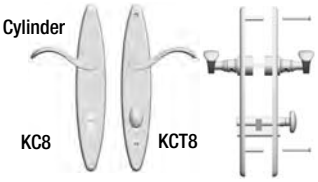

FDP8
Passage

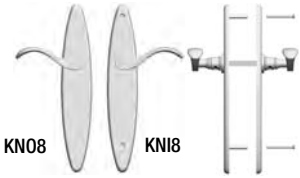

FD8
Full Inactive

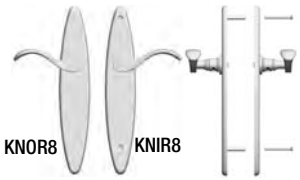

PAT8
Patio

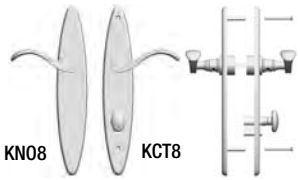

Bismark (MP002), Boulder (MP016), Cody (MP015), Concord (MP004), Lakeshore (MP013), Springfield (MP001)
Tier 1

Without Levers
Denote with "x" at end of SKU

NOTE: Must use specialty multi point screws included in trim box (1336.009).

Item #	Description	003, 031, 033 050, 060, 102 112, 150, 151 190, 260, 264	044, 055, 056 402, 452	003, 031, 033 050, 060, 102 112, 150, 151 190, 260, 264	044, 055, 056 402, 452
Entrance Mortise Cylinder European Mortise					
ACT8	Entry - Keyed W/ Turnknob	$658	$748	$486	$551
Passage European Mortise					
FDP8	Passage - Active No Cylinder Or Turnknob	$538	$625	$366	$431
Full Inactive European Mortise					
FD8	Inactive - Non-keyed	$538	$625	$366	$431
Patio European Mortise					
PAT8	Patio - Non-keyed	$538	$625	$366	$431
Escutcheons ONLY					
KNI8	KN, Cut for Knob Inside	$227	$263	—	—
KNIR8	KN, Cut for Knob Inside - Rigid Lever	$227	$263	—	—
KNO8	KN, Cut for Knob Outside	$227	$263	—	—
KNOR8	KN, Cut for Knob Outside - Rigid Lever	$227	$263	—	—
KC8	KC, Cut for Cylinder Outside - Pro C1	$251	$287	—	—
KCT8	KC, Cut for Cylinder Inside - Pro C1	$251	$287	—	—

Kensington (MP003), Bristol (MP009), Richland (MP011)
Tier 2

Without Levers
Denote with "x" at end of SKU

NOTE: Must use specialty multi point screws included in trim box (1336.009).

Item #	Description	003, 031, 033 050, 060, 102 112, 150, 151 190, 260, 264	044, 055, 056 402, 452	003, 031, 033 050, 060, 102 112, 150, 151 190, 260, 264	044, 055, 056 402, 452
Entrance Mortise Cylinder European Mortise					
ACT8	Entry - Keyed W/ Turnknob	$718	$808	$545	$611
Passage European Mortise					
FDP8	Passage - Active No Cylinder Or Turnknob	$598	$688	$426	$491
Full Inactive European Mortise					
FD8	Inactive - Non-keyed	$598	$688	$426	$491
Patio European Mortise					
PAT8	Patio - Non-keyed	$598	$688	$426	$491
Escutcheons ONLY					
KNI8	KN, Cut for Knob Inside	$251	$287	—	—
KNIR8	KN, Cut for Knob Inside - Rigid Lever	$251	$287	—	—
KNO8	KN, Cut for Knob Outside	$251	$287	—	—
KNOR8	KN, Cut for Knob Outside - Rigid Lever	$251	$287	—	—
KC8	KC, Cut for Cylinder Outside - Pro C1	$276	$311	—	—
KCT8	KC, Cut for Cylinder Inside - Pro C1	$276	$311	—	—

HOW TO ORDER, CONFIGURATION 8

STEP 3 (CONT) **THICK DOOR KIT — CONFIGURATION #8** **EXAMPLE #** **MP000** . XXX . **ACTD**

Thick Door Kits
Tier 1 & Tier 2

	Included w/standard sets						
ACT1	**1 ¾″**	**2″**	**2 ¼″**	**2 ⅜″**	**2 ½″**	**2 ¾″**	**List Price**
All others	MP000.xxx.ACTD	MP000.xxx.ACTD	MP000.xxx.ACTE	MP000.xxx.ACTF	MP000.xxx.ACTG	MP000.xxx.ACTG	$144
Bismark, Kensington, Lakeshore	MP000.xxx.ACTD	MP000.xxx.ACTE	MP000.xxx.ACTE	MP000.xxx.ACTF	MP000.xxx.ACTG	MP000.xxx.ACTI	$144
PAT1	**1 ¾″**	**2″**	**2 ¼″**	**2 ⅜″**	**2 ½″**	**2 ¾″**	
All others	MP000.xxx.PATJ	MP000.xxx.PATJ	MP000.xxx.PATK	MP000.xxx.PATL	MP000.xxx.PATM	MP000.xxx.PATM	$144
Bismark, Kensington, Lakeshore	MP000.xxx.PATJ	MP000.xxx.PATK	MP000.xxx.PATK	MP000.xxx.PATL	MP000.xxx.PATM	MP000.xxx.PATO	$144
FD Sets	**1 ¾″ to 2 ¼″**			**2 ⅜″ to 2 ¾″**			
	MP000.000.FDPTP	—	—	MP000.000.FDPTQ	—	—	$31
FDP Sets	**1 ¾″ to 2 ¼″**			**2 ⅜″ to 2 ¾″**			
	MP000.000.FDPTP	—	—	MP000.000.FDPTQ	—	—	$31

> Baldwin European Mortise trims assume 1.75″ door thickness.
> For thicker doors, please order a Thick Door kit according to the chart below.
Specify cylinder finish where noted.
> Available cylinder finishes include ONLY 264 (Satin Chrome), 040 (Satin Brass) and 112 (Venetian Bronze).
> See finish chart on page 181 for cylinder finish recommendations.

ACT kits include: 8mm to 7.3mm Conversion Spindle, Keyed Cylinder, and Cylinder Installation Hardware
PAT kits include: 8mm to 7.3mm Conversion Spindle, Patio Cylinder, and Cylinder Installation Hardware
FDPTP kits include: 8mm to 7.3mm Conversion Spindle

NOTES

RIM LOCKS AND CREMONE BOLTS

STANDARDS & SPECIFICATIONS

Standards & Specifications

Pride in our American Heritage and renewed interest in its early history has greatly influenced U.S. architecture. With careful research and design, Baldwin has authentically reproduced a piece of that heritage – colonial rim locks.

- >Constructed with solid forged brass parts for exceptional durability and smooth operation
- >Trim designs secured to a broached spindle with an epoxy (resin) coated set screw – prohibits screw from loosening
- >Interior rim locks use bit keys. Bit keys may be ordered fixed permanently into the lock by ordering as .RBIT or .LBIT configurations
- >Rim locks are sold as sets with 5030 knob included
- >Split finish requests are subject to 5% list price adder
- >1.375 minimum door thickness is required

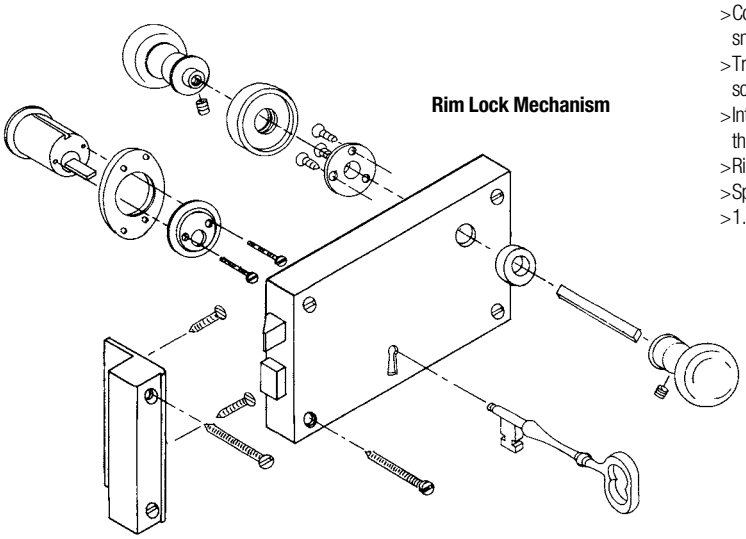

LEFT HAND CONDITION

RIGHT HAND CONDITION

LEFT HAND REVERSE BEVEL CONDITION

RIGHT HAND REVERSE BEVEL CONDITION

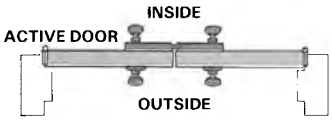

LEFT HAND CONDITION

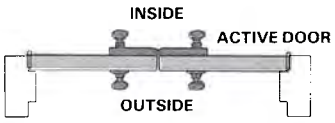

RIGHT HAND CONDITION

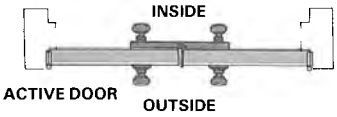

LEFT HAND REVERSE BEVEL CONDITION

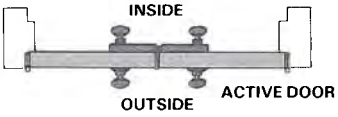

RIGHT HAND REVERSE BEVEL CONDITION

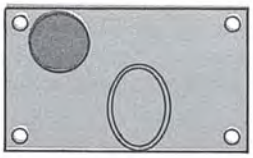
EXTERIOR PLATE, LEFT HAND CONDITION
(SINGLE DOOR)

Handing of Rim Lock Plates

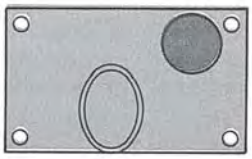
EXTERIOR PLATE, RIGHT HAND CONDITION
(SINGLE DOOR)

NOTE: Hand of door is always determined from outside
IMPORTANT: A dummy trim rim lock must be used on ALL pairs of reverse bevel doors

PASSAGE, PRIVACY & ENTRANCE

Rim Locks

Full Dummy prepared as a strike for all function rim locks

Full Dummy Rim Locks

Hollow rim lock case (without any working mechanism)

Included	Item #
Knob (Pair)	5030
Rose (Half Pair)	5002

Passage Rim Locks

Latch bolt by knob either side

Included	Item #
Bit Key*	5755
Knob (Pair)	5030
Rose (Half Pair)	5002

Privacy Rim Locks

Latch bolt by knob either side
Dead bolt by Bit Key either side

Included	Item #
Bit Key*	5755
Cover Plate	0406
Emergency Key	5753
Knob (Pair)	5030
Rose (Half Pair)	5002

Entrance Rim Locks

Latch bolt by knob either side
Dead bolt by key outside and slide bolt inside

Included	Item #
Cylinder	8333
Cylinder Cover Plate	6755
Cylinder Cover Plate*	6757
Knob (Pair)	5030
Rose (Half Pair)	5002

*** Only in case of 5704**

Exterior Trim

Exterior Trim

Included	Item #
Cylinder (Entrance Only)	6755
Knob	5030
Rose	5002

>**RIM LOCKS ARE NOT REVERSIBLE – SPECIFY HAND OF DOORS**
>**IMPORTANT:** A dummy trim rim lock must be used on ALL pairs of reverse bevel doors
>*Bit Key can be permanently fitted at an extra charge of $10 (add 'BIT' to end of suffix: eg. 5600.xxx.R becomes 5600.xxx.RBIT)
>Emergency key – s/b stored in readily accessible place
>For 2 1/4 inch thick doors, 5 inch spindle required

Small Verical Rim Lock

5600, 5602, 5604
Inside Trim

Pictured is the 5602 lock. Please note the 5600 & 5604 locks do not come with the Bit key/ key hole.

Right Hand Door, Interior Trim Shown

Item #	Description	Function	Wt.	Backset	003, 031, 033 050, 060, 102 112, 150, 151 190, 260, 264	044 055 056
5600.xxx.R (.L, .RR, .LR)	Small Vertical	Passage	3.7	2.75″	$818.00	$876.00
5600.xxx.RFD (.LFD)	Small Vertical	Full Dummy	3.7	2.75″	$438.00	$486.00
5602.xxx.R (.L, .RR, .LR)	Small Vertical	Privacy	4.0	2.75″	$1,023.00	$1,069.00
5602.xxx.RFD (.LFD)	Small Vertical	Full Dummy	3.7	2.75″	$527.00	$573.00
5604.xxx.R (.L, .RR, .LR)*	Small Vertical	Entrance	4.6	2.75″	$1,110.00	$1,157.00
5604.xxx.RFD (.LFD)*	Small Vertical	Full Dummy	4.6	2.75″	$556.00	$602.00

CASE: 4.75″ × 3.75″ × .875″
KEEPER: 4.75″ × .875″ × 1.625″
BACKSET: 2.75″
Upright design well suited for narrow stile doors
*5604.xxx – Utilizes Slide Bolt instead of Bit Key.

7″ Horizontal Rim Lock

5634
Inside Trim

Right Hand Door, Interior Trim Shown

Item #	Description	Function	Wt.	Backset	003, 031, 033 050, 060, 102 112, 150, 151 190, 260, 264	044 055 056
5634.xxx.R (.L, .RR, .LR)	7″ Horizontal	Entrance	5.5	5.25″	$1,163.00	$1,279.00
5634.xxx.RFD (.LFD)	7″ Horizontal	Full Dummy	5.5	5.25″	$696.00	$783.00

CASE: 4″ × 6.75″ × .875″
KEEPER: 4″ × .875″ × 1.625″
BACKSET: 5.25″

Small Horizontal Rim Lock

5704
Inside Trim

Right Hand Door, Interior Trim Shown

Item #	Description	Function	Wt.	Backset	003, 031, 033, 044 050, 060, 102 112, 150, 151 190, 260, 264	055 056
5704.xxx.R (.L, .RR, .LR)	Small Horizontal	Entrance	4.6	3.5″	$1,110.00	$1,157.00
5704.xxx.RFD (.LFD)	Small Horizontal	Full Dummy	4.6	3.5″	$556.00	$602.00

CASE: 3.75″ × 4.75″ × .875″
KEEPER: 3.75″ × .875″ × 1.625″
BACKSET: 3.5″
TO BIT KEY: 2.375″

ENTRANCE, SPECIAL FUNCTION

Beveled Rim Lock

5636

Interior Trim

5636.xxx	Included	Size	
Exterior Trim	—	**Case:**	5″ × 7.25″ × .875″
Interior Trim	—	**Keeper:**	5″ × 1.375″ × 1.625″
Bit Key*	5755	**Backset:**	5.25″
Cylinder	8333	**To Bit Key:**	4″
Cylinder Cover Plate	6755	**Front to cylinder centerline:**	3″
Knob/Lever	5030 (Pair)		
Filler Plate	—	Latch bolt by knob either side	
Lock Plate	—	Dead bolt by key outside and slide bolt inside or bit key	
Rose	5002 (Half Pair)		

5644

Interior Trim

5644.xxx	Included	Size	
Exterior Trim	—	**Case:**	5.75″ × 10″ × .875″
Interior Trim	—	**Keeper:**	5.75″ × .875″ × 1.625″
Bit Key*	5755	**Backset:**	8″
Cylinder	8333	**To Bit Key:**	6″
Cylinder Cover Plate	6755	**Front to cylinder centerline:**	5″
Knob/Lever	5030 (Pair)		
Filler Plate	—	Latch bolt by knob either side	
Lock Plate	—	Dead bolt by key outside and slide bolt inside or bit key	
Rose	5002 (Half Pair)		

Item #	Description	Function	Wt.	Backset	003, 031, 033 050, 060, 102 112, 150, 151 190, 260, 264	044 055 056
5636.xxx.R (.L, .RR, .LR)	Bevelled Rim Lock	Entrance	7.2	5.25″	$1,514.00	$1,631.00
5636.xxx.RFD (.LFD)	Bevelled Rim Lock	Full Dummy	7.2	5.25″	$812.00	$930.00
5644.xxx.R (.L, .RR, .LR)	Horizontal Cylinder Lock	Entrance	7.9	8″	$1,514.00	$1,631.00
5644.xxx.RFD (.LFD)	Horizontal Cylinder Lock	Full Dummy	7.9	8″	$812.00	$930.00
5722.xxx	Entrance Door Rim Lock	Outside only	x	3.5″	$422.00	$445.00
5723.xxx.R (.L)	Entrance Door Rim Lock	Inside only	x	3.5″	$1,110.00	$1,110.00

>RIM LOCKS ARE NOT REVERSIBLE – SPECIFY HAND OF DOORS

>IMPORTANT: A dummy trim rim lock must be used on ALL pairs of reverse bevel doors

>*Bit Key can be permanently fitted at an extra charge of $10 (add ‘BIT’ to end of suffix: eg. 5600.xxx.R becomes 5600.xxx.RBIT)

>For 2 ¼ inch thick doors, 5 inch spindle required

TRIM

Trim Pieces

Rim Lock Keeper
(Strikes)

Item #	Description	Size	Fits Rim Lock	003, 031, 033 050, 060, 102 112, 150, 151 190, 260, 264	044 055 056
5601.xxx	Keeper (Standard Strike)	4.75″ x 0.875″ x 1.625″	5600, 5602, 5604	$89.00	$99.00
5641.xxx	Keeper (Standard Strike)	5.75″ x 0.875″ x 1.625″	5644	$89.00	$99.00
5671.xxx	Keeper (Standard Strike)	3.75″ x 0.875″ x 1.625″	5704	$89.00	$99.00
5603.xxx	Reverse Bevel Keeper (Strike)	4.75″ × 1″ × .375″	5600, 5602, 5604	$71.00	$82.00
5628.xxx	Reverse Bevel Keeper (Strike)	4″ × 1″ × .375″	5634	$71.00	$82.00
5642.xxx	Reverse Bevel Keeper (Strike)	5.75″ × 1″ × .375″	5644	$71.00	$82.00
5672.xxx	Reverse Bevel Keeper (Strike)	3.75″ × 1″ × .375″	5704	$71.00	$82.00
5606.xxx	Scuff Plate	4.75″ × 1.875″	5600, 5602, 5604	$71.00	$82.00
5633.xxx	Scuff Plate	4″ × 1.875″	5634	$71.00	$82.00
5643.xxx	Scuff Plate	5.75″ × 1.875″	5644	$71.00	$82.00
5673.xxx	Scuff Plate	3.75″ × 1.875″	5704	$71.00	$82.00

Rim Lock Keepers NOT available in 030 Finish.

Scuff Plates
- >Recommended on reverse bevel doors.
- >Prevents damage to doors and latch bolts.
- >Provides smoother lock operation.

Reverse Bevel Keepers
(Strikes)

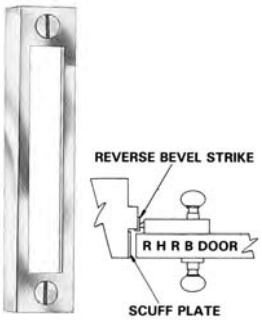

Scuff Plates

Exterior only Lock Plate

5608, 5626, 5629, 5674

Pictured is the 5626.xxx.RSKC lock.

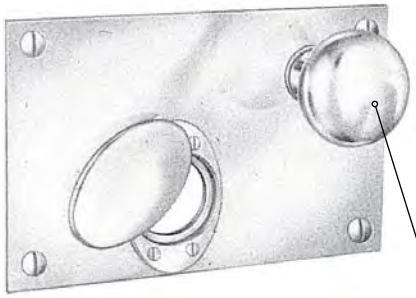

Item #	Description	Door Handling	Door	Plate Prep	Size	Fits Rim Lock	003, 031, 033 050, 060, 102 112, 150, 151 190, 260, 264	044 055 056
5608.xxx.RSKC (.LSKC)	Exterior Lock Plate	R or L	Single	KC	4.75″ × 3.25″	5604	$164.00	$182.00
5626.xxx.RSKC (.LSKC)**	Exterior Lock Plate				4″ × 6.25″	5634, 5636	$164.00	$182.00
5629.xxx.RSKC (.LSKC)	Exterior Lock Plate					5639	$164.00	$182.00
5674.xxx.RSKC (.LSKC)*	Exterior Lock Plate				3.75″ × 4.25″	5704	$164.00	$182.00

*Does not include and cannot accommodate 6755 Swing Cover
**Beveled trim for 5626 lock plate is not available.

5608, 5626 & 5629 Plates: 6755 Cylinder Cover Plate is secure to the plate.
Note: Rose and Cylinder trim furnished with cylinder function rim locks can not be used w/ Lock Plate
THICKNESS: .093″

Knob trim NOT included
Lock Plates are used in place of cylinder collars and roses on Cylinder-function Rim Locks

ACCESSORIES

Accessories

0406

5753

5754

5755

5758

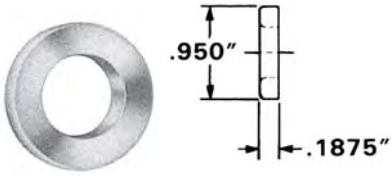

6755

8314

Item #	Description	003, 031, 033 050, 060, 102 112, 150, 151 190, 260, 264	044 055 056
0406.xxx	Colonial Emergency Release Trim & Key	$48.00	$53.00
5753.xxx	Emergency Release Key	$41.00	$48.00
5754.xxx	Key Plate	$18.00	$25.00
5755.xxx	Bit Key	$41.00	$48.00
5758.xxx	Solid Brass Spacer	$12.00	$18.00
6755.xxx	Cylinder Lock Cover Plate	$112.00	$118.00
6755.xxx.001	1⁄16″ Blocking Ring – 6755 only		$12.00
6755.xxx.002	3⁄32″ Blocking Ring – 6755 only	(040 finish only)	$12.00
6755.xxx.003	1⁄8″ Blocking Ring – 6755 only		$12.00
8314.xxx	Wrought Cylinder Collar for Rim Locks	$18.00	$25.00

0406.xxx – Colonial Emergency Release Trim & Key
SIZE: 2.312″ × .687″ (59 × 17mm).

5753.xxx – Emergency Release Key
SIZE: 4″ (102mm) long.
Designed for use with Privacy Rim Lock

5754.xxx – Key Plate
SIZE: 2″ × 1.125″ (51 × 29mm).Key Plate

5755.xxx Bit Key
SIZE: 4″ (102mm) long.
FEATURES: Fits all Baldwin rim locks. Can be permanently fitted with locks to prevent unauthorized removal.

5758.xxx – Solid Brass Spacer
Designed for use with knob trim during installation on rim lock case. Furnished standard with all rim lock sets.

6755.xxx – Cylinder Cover Plate
SIZE: 2.375″ × 1.625″ (60 × 41mm)
FEATURES: For use with all standard rim lock cylinders (except 5704 Rim Lock)

6755.xxx.001-3 – Blocking Rings
For 6755 Cylinder Cover Plate only

CREMONE BOLTS

Cremone Bolts

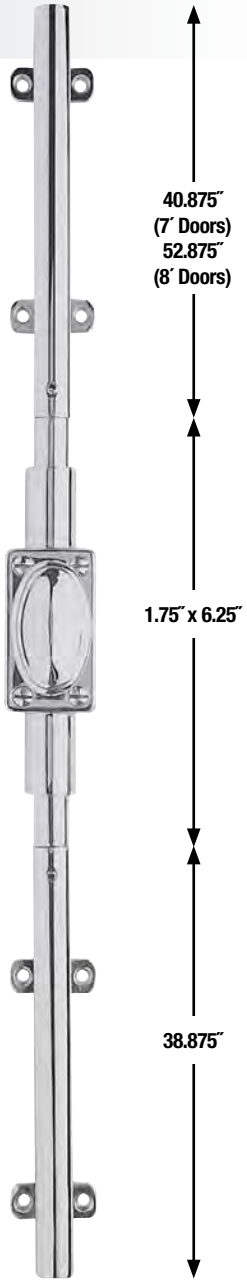

8105.xxx
FOR ILLUSTRATION PURPOSES ONLY.
TRIM AVAILABLE ON EXTERIOR SIDE.

8105, 8106, & 8107.xxx Right Hand or Left Hand, 7 or 8 ft. units.
SOLID FORGED BRASS CONSTRUCTION

CASE SIZE: 1.75″ × 6.25″ (44 × 159mm)

BOLT DIMENSIONS:
STANDARD 7 FT. LENGTH
Top Rod: .625″ × 40.875″ (16 mm × 1.04m).
Bottom Rod: .625″ × 38.875″ (16 × .99 m)

STANDARD 8 FT. LENGTH
Top Rod: .625″ × 52.875″ (16mm × 1.34)
Bottom Rod: .625″ × 38.875″ (16mm × .99m)

THROW: When engaged: both bolts extend .75″ (19mm) into jamb and sill.

GUIDES: 1.5″ (38mm) wide. Decorative covers to conceal guides are available at an additional charge. Please consult price list.

FASTENERS: Case is surface mounted with 4 No. 8 × 1.25″ Oval Phillips Head Screws for added strength and durability.

STRIKES: Furnished with 3 Strikes, one Universal, one Angle, and one Mortise to meet various door conditions.

SPINDLE: 1.375″ (35mm) in length (N0. 8105.004) A straight spindle must be ordered when trim is ordered for the exterior side of the door. When paired with Estate rosette on exterior. Use "G" trim thickness when sizing spindle.

FEATURES: Often used as an elegant and functional addition to a pair of french doors with very narrow stile conditions. A typical application requires active cremone bolts mounted on each leaf of a pair of doors with no exterior access.Specify cremone bolt less knob (LK) or less lever (LK), and order knob or lever minus rose (MR) of choice as a separate item.

SPECIAL CONDITIONS: When specified, most trim as illustrated in the knob/lever section is available for the exterior side to latch door. Indicate knob or lever to be furnished. Straight spindle must be purchased separately. In addition, for doors larger than 8ft. see Cremone Bolt extension packets below.

PACKED: One in a box with three strikes and the appropriate fasteners.Cremone Bolts are available in two sizes, one for doors up to and including 7 ft. (2.13m) and one for doors between 7 feet and 8 feet in height, at an additional cost. A 42″ centerline above the finished floor is considered standard with our Cremone Bolts.

NOTE: Always specify hand of door as Knob/Lever trim will turn only in one direction. See diagram on bottom of page for handling details. To enable greater job site flexibility, exact sizing of Cremone Bolts can be accomplished in the field. For doors larger than 8ft. in height, the addition of a Cremone Bolt extension packet is necessary. See table below.

ORDERING INFORMATION: The final suffix numbers will indicate the following:
Digit #1 of the suffix will indicate hand of the unit: either right (R) or left (L)
Digit #2 of the suffix will indicate length: either 7' or 8'
Digits #3 & #4 of the suffix will indicate a cremone bolt less knob or Lever (LK).

ORDERING EXAMPLES, KNOB/FUNCTION:
Order cremone bolt and separate line item for knob:
8105.XXX.R7LK: Standard design 7' Cremone bolt right hand less knob/lever
5000.XXX.IMR: 1 each 5000 knob minus rose

ORDERING EXAMPLES, LEVER/FUNCTION:
Order cremone bolt and separate line item for lever:
8105.XXX.L7LL: Standard design 7' Cremone bolt right hand less lever 1 each 5125 lever left hand minus rose: 5152.XXX.LMR Nos. 8105, 8106 & 8107.XXX.R7/8R/LK are furnished with guides less knobs or levers.

CREMONE BOLT EXTENSION PACKETS:
8106.XXX.E24 2 FT. Extension Packet - Ornamental Design
8106.XXX.E48 4 FT. Extension Packet - Ornamental Design
8107.XXX.E24 2 FT. Extension Packet - Contemporary Design
8107.XXX.E48 4 FT. Extension Packet - Contemporary Design

These packets contain all the parts necessary to extend the top rod length of stock 7ft. or 8ft. Cremone Bolts for special door situations. The following chart illustrates which item to order for a particular door size.

NOTE: Extension packets are only available for Cremone Bolts with decorative covers. Not available for use with 8105 Cremone Bolts.

0310.xxx.ANGL
Angle Strike
TIER 1 FINISHES: 102, 150
TIER 2 FINISHES: 151

0310.xxx.UNIV
Universal Strike
TIER 1 FINISHES: 102, 150

0310.xxx.MORT
Mortise Strike

Door Size	Stock parts to be ordered
up to 9 ft.	Standard 7 ft. Cremone Bolt and 2 ft. Extension
up to 10 ft.	Standard 8 ft. Cremone Bolt and 2 ft. Extension
up to 11 ft.	Standard 8 ft. Cremone Bolt and 4 ft. Extension
up to 12 ft.	Standard 8 ft. Cremone Bolt and 4 ft. Extension
above 12 ft.	Not Available

Cremone Bolts

8105

Item #	Function	003, 031, 033 050, 060, 102 112, 150, 151 190, 260, 264	044 055 056
8105.xxx.R7LK(L7LK)	Standard 7´ Doors	$613	$674
8105.xxx.R8LK(L8LK)	Standard 8´ Doors	$796*	$796
8106, 8107.xxx	Ornamental & Contemporary 7´ Doors (R7LK, L7LK)	$735	$796
8106, 8107.xxx	Ornamental & Contemporary 8´ Doors (R8LK, L8LK)	$1,041	$1,103
8105.xxx.GD	Cremone bolt rod guide	$37	$43
8105.xxx.REPL	Bottom replacement rod for all cremone bolts	$184	$215
8105.xxx.7TOP	Top replacement rod for cremone bolts for 7´ doors	$124	$124
8105.xxx.8TOP	Top replacement rod for cremone bolts for 8´ doors	$184	$184
8105.xxx.R510/L510	Case assembly	$184	$215
8106.xxx.CVR	Ornamental cover for cremone & surface bolts	$50	$51
8107.xxx.CVR	Contemporary cover for cremone & surface bolts	$50	$51
8106.xxx.E24	24″ extension rod w/ornamental cover	$160	$191
8107.xxx.E24	24″ extension rod w/contemporary cover	$160	$191
8106.xxx.E48	48″ extension rodw/ornamental cover	$246	$275
8107.xxx.E48	48″ extension rod w/contemporary cover	$246	$275

*Not available in 003

8105.xxx – Standard Cremone Bolt

FEATURES: Supplied without decorative covers for guides.

NOTE: All 7´ Cremone Bolts are supplied with 4 guides and 8´ Cremone Bolts are supplied with 6 guides. Customer must purchase knob or lever, separately.

8106

8106.xxx – Ornamental Cremone Bolt

FEATURES: Similar to 8105 Cremone Bolts except that the guides are concealed with decorative covers for a more elegant appearance.

8107.xxx – Contemporary Cremone Bolt

FEATURES: Similar to 8105 Cremone Bolts except that the guides are concealed with decorative covers for a more elegant appearance.

8106 & 8107 Covers

FEATURES: Covers available separately to facilitate stocking all designs.

PACKED: Includes fasteners.

WEIGHT: 8106: 2.7 lbs. (1.22kg)
8107: 3 lbs. (1.36kg)

Cremone bolts intended for use on INTERIOR doors only.

Cremone bolt rod cannot be distressed.
The following are recommended to match distressed finishes:
402 = 102 452 = 151

NOTE: Cremone bolts are sold less knob/lever. Customers select Estate Collection knob or lever of their choice. Cremone mechanism is handed. Select cremone in same hand as door.

8107

8106
Ornamental

8107
Contemporary

KEYPAD ENTRY

Keypad Entry Features & Specifications

FEATURES

- Easy Install in Minutes w/ Screwdriver
- Fits Standard Tubular Door Prep
- No Hard Wiring Required
- 8 Customizable User Codes with Easy Add & Delete
- 4 to 8 Digit Codes
- One Touch Locking
- Back-Lit Keypad for Increased Visibility
- Incorrect Code Lockout Feature
- Customizable Features:
  - Automatic Door Locking after 30 Seconds
  - Door Locked / Unlocked led indicator
  - Audible beep for activation
- 4 AA Alkaline Batteries
- Low Battery LED Indicator
- Tapered Deadbolt Design - Compensates for Door Misalignment Conditions
- Protective Coated Keypad Preventing Wear & Discoloration
- Automatic Handing Feature
- Solid Forged Brass Trim

SPECIFICATIONS

Function	Single Cylinder Deadbolt
Door Prep	2 ⅛" Bore, 1" Edge Bore
Backset	Adjustable 2 ⅜" or 2 ¾"
Door Thickness	1.75" to 2.00"
Thick Door Kit	For 2 1/4" & 2 1/2" door thickness, order 8421.000.TP01 ($25 List Price)
Cylinder	5-Pin C-Keyway
Faceplate	1" Square Corner
Strike	Square Corner with reinforcing plate
Latch	1" Throw
Bolt	Brass, tapered w/ security pin
Door Handing	Automatic Handing

FAQ List
Keypad Entry

Does this product require a different installation?	No, fits a standard tubular deadbolt prep.
What is the estimated life of the batteries?	Approximately 1 year of standard use.
Is this product offered in an emergency egress function?	No, this product is not offered in an Emergency Egress function.
What cylinders are provided?	Uses a standard deadbolt cylinder with an extended tail piece.
What latches are provided with this product?	The Keypad Entry Deadbolt products use a modified standard Deadbolt Latch that includes a tapered bolt & a modified latch cam.
Are there issues with the motorized bolt in regards to weather-stripping or warped door conditions?	The tapered deadbolt was designed to address these conditions.
Can I get additional finishes or split finishes?	No, these products cannot be extended into additional finishes or split finishes at this time.
What is the standard lead time for these products?	There will be an extended lead time period for the product launch, but after that the Keypad Entry products will maintain a standard product lead time of 4 weeks.
Are Keyed Alike sets offered?	No, not at this time. Product will need to be re-keyed in the field.
What is the Warranty?	The Keypad Entry Deadbolts carry a Standard Estate Mechanical & Finish Warranty & a 1 Year Electronic Warranty.
Are batteries included?	No, AA batteries are not included & will need to be purchased separately.

KEYPAD ENTRY

How To Order

Deadbolt

Sectional Handleset

DEADBOLT	EXAMPLE:
To Order Only a Deadbolt, Simply Order & Specify the Finish:	**8285.150.AC1**

SECTIONAL HANDSET	EXAMPLE:
To Order Sectional Handleset, Order Both Deadbolt & Sectional Handleset Kit* (with Handing) & Specify the Finish:	**8285.150.AC1 + 85386.150.ACRH**

>Keypad Entry Systems are only available in Soho & Boulder Styles.

>Split finish and special keying options are not available for keypad entry systems.

Finishes Available for Soho Keypad Entry

8285.xxx.AC1
Soho Deadbolt

85386.xxx.ACRH (.ACLH)
Soho Sectional Trim w/ 5485V Lever

Finishes

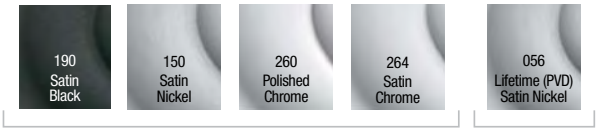

TIER 1 | TIER 2

Finishes Available for Boulder Keypad Entry

8252.xxx.AC1
Boulder Deadbolt

85353.xxx.ACRH (.ACLH)
Boulder Sectional Trim w/ 5452V Beavertail Lever

Finishes

TIER 1 | TIER 2

Soho Deadbolt

Item #	Description	150, 190 260, 264	056
8285.xxx.AC1	Deadbolt	$530	$564

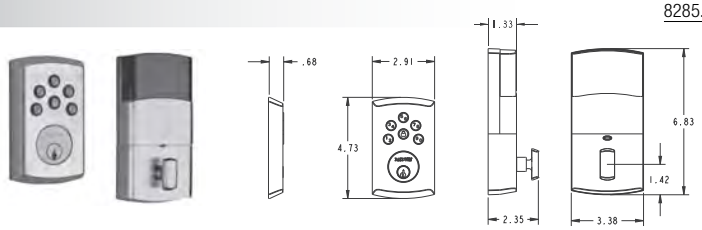

SOHO Sectional Handleset Kit

Item #	Description	150, 190 260, 264	056
85386.xxx.ACRH (.ACLH)	Sectional Entry Handleset Kit	$382	$433

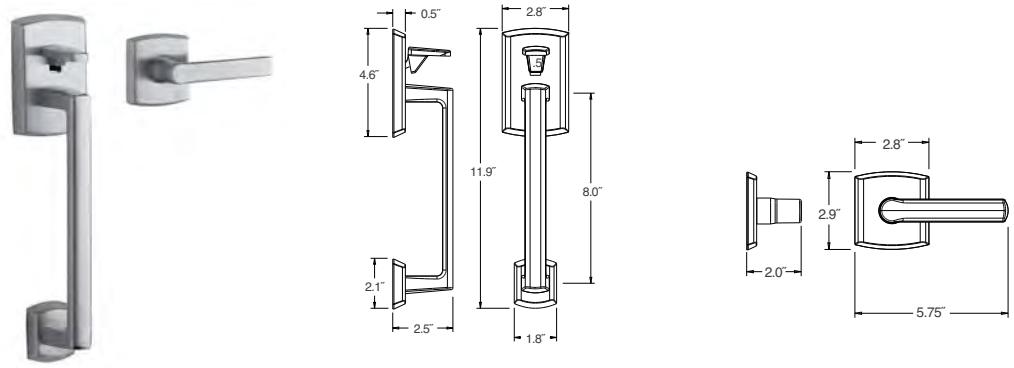

Boulder Deadbolt

Item #	Description	003 102, 112	402
8252.xxx.AC1	Deadbolt	$530	$564

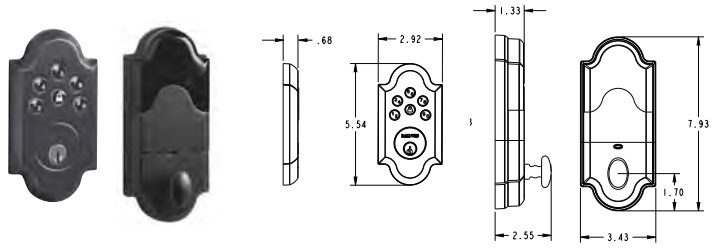

Boulder Sectional Handleset Kit

Item #	Description	003 102, 112	402
85353.xxx.ACRH (.ACLH)	Sectional Entry Handleset Kit	$382	$398

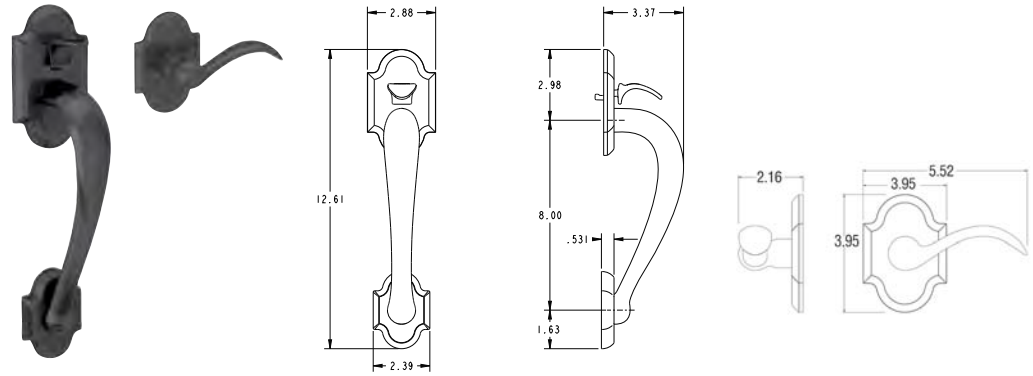

***QUICK SHIP** is available in **limited functions and finishes.**
For complete listing, please refer to page 272.

DEADBOLT SETS

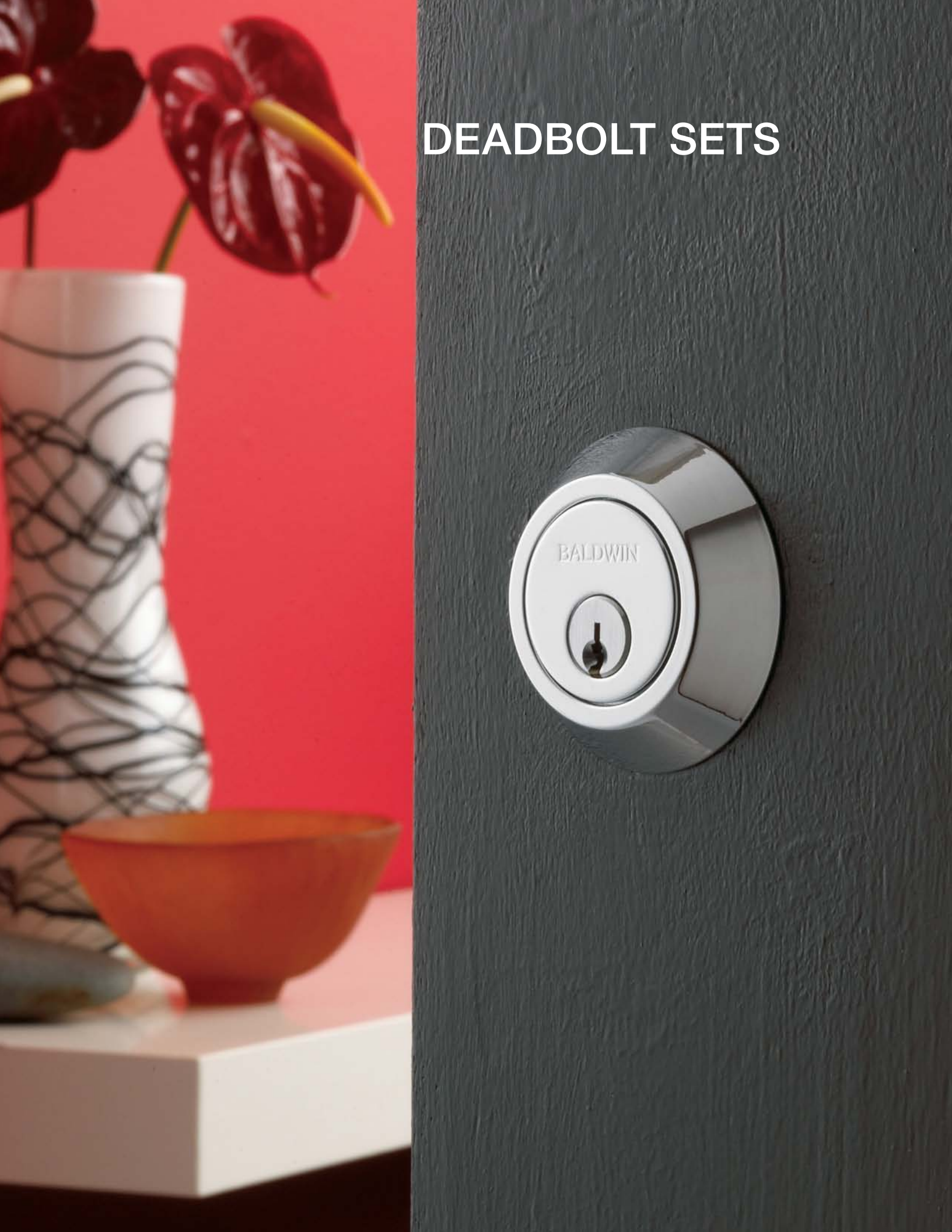

8000 SERIES

LOW PROFILE CYLINDER DEADBOLT FOR 1 ⅝″ (41mm) DOOR PREP

All deadbolts feature a ½″ low-profile cylinder projection.

CASE: Deadbolt case is formed of heavy gauge steel for strength and assures solid fit in door preparations. Most interior working parts are made of solid brass for maximum strength and smooth operation.

DEADBOLT: All deadbolts are of solid brass construction. Deadbolt has .600″ x .770″ x 1″ (15 x 20 x 25mm) throw when extended and a hardened steel insert for maximum protection and security. Deadbolt is furnished in 040 and 264 finishes to match trim.

GRADE 1: Select deadbolts meet Grade 1 Requirements as set forth in ANSI A156.5 Test Sections 9.1–9.11 & 10.1–10.9.

BACKSET: Adjustable backset deadbolt 2 ⅜″ (60mm) or 2 ¾″ (70mm). NON-HANDED design facilitates specification and installation.

STRIKE: Every deadbolt illustrated in this section is furnished with a specially-designed reinforcing strike constructed of high grade steel for ultimate strength and durability. The strike is installed with four (4) security jamb screws (including two (2) 3″ screws) and a dust box and is covered with an armored front to conceal the fasteners. The 3″ screws securing the reinforcing strike resist tampering and guard against theft.

CYLINDERS: The cylinder housing is protected with a free-turning exterior cylinder guard fabricated from solid brass to resist gripping or twisting. Cylinders are supplied standard with 03 keyway and two nickel silver keys. All deadbolts are furnished with 5-pin keying.

KEYING: Keep in mind that the total quantity of deadbolts ordered must be a multiple of the keyed alike quantity. Contact factory for keying to a specific key number. KEYS are designed with a 1.25″ (32mm) wide bow surface.

PACKAGING: Packaged one deadbolt per box with security strike, dust box and keys. All products are packaged in contractor packaging.

WEIGHT: 1.8 lbs. each (.81kg); 10.8 lbs. (4.86kg) per case for standard package.

DOOR CONDITIONS: Deadbolts fit 1 ⅝″ (41mm) diameter cutouts. Trim rings No. 8090 available for doors drilled with 2-1/8″ (54mm) diameter holes.

DOOR THICKNESS: Deadbolts fit 1 ¾″ (44mm) thick doors. Deadbolt kits are available for 2″ (51mm) and 2 ¼″ (57mm) thick doors at an additional charge. Door spacers No. 8097 are required for 1 ⅜″ (35mm) thick doors (available for the 8041, 8011, 8031 & 8021 deadbolts only).

8200 SERIES

LOW PROFILE CYLINDER DEADBOLT FOR 2 ⅛″ (54mm) DOOR PREP

All information identical to 8000 SERIES except where noted here

WEIGHT: 2.2 lbs. each (.99kg); 13.2 lbs. per case (5.94kg).

DOOR CONDITIONS: Deadbolts fit 2 ⅛″ (54mm) diameter cutouts.

DOOR THICKNESS: Deadbolts fit 1 ¾″ (44mm) thick doors. Deadbolt kits are available for 2″ (51mm) and 2 ¼″ (57mm) thick doors at an additional charge. Door spacers No. 8297 are required for 1 ⅜″ (35mm) thick doors (8241, 8242, 8231, 8232 only).

8220, 8221 Contemporary Deadbolt – 2 1/8” Door Prep

QUICK SHIP

8220

8221

Item #	Description	Wt.	003, 031, 033 050, 060, 102 112, 150, 151 190, 260, 264	044, 055, 056 402, 452
8220.xxx	Single cylinder deadbolt	1.7	$141	$158
8221.xxx	Double cylinder deadbolt	1.9	$170	$187

NOTE: Not Available for 1 ⅜” thick doors.
STEEL CASE: .960″ Dia. x 3.312″ or 3.75″ extended (24 x 84 or 95mm)
FRONT: .156″ x 1″ x 2.25″ (4 x 25 x 57mm)

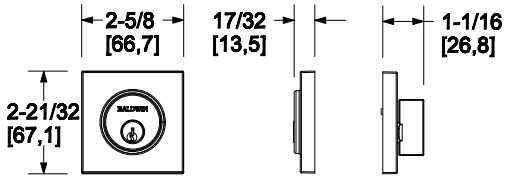

8244 Contemporary Deadbolt – 2 ⅛″ Door Prep

QUICK SHIP

8244

8244.xxx.PAT

Item #	Description	Wt.	003, 031, 033 050, 060, 102 112, 150, 151 190, 260, 264	044, 055, 056 402, 452
8244.xxx	Single cylinder deadbolt	2.0	$141	$158
8244.xxx.PAT	Patio deadbolt	1.2	$112	$129

NOTE: Not Available as a double cylinder. Also Not Available for 1 ⅜” thick doors.
STEEL CASE: .960″ Dia. x 3.312″ or 3.750″ extended (24 x 84 or 95mm)
FRONT: .156″ x 1″ x 2.25″ (4 x 25 x 57mm)
NOTE: For Patio deadbolt, refer to instruction sheet for special door preparation.

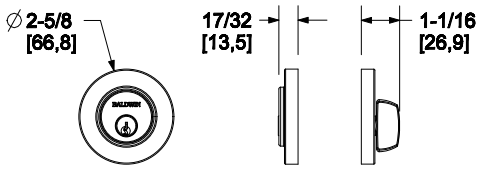

***QUICK SHIP** is available in **limited functions and finishes.**
For complete listing, please refer to page 272.

DEADBOLTS

8011, 8041 Contemporary Deadbolt – 1 ⅝″ Door Prep

8041

8011

Item #	Description	Wt.	003, 031, 033 050, 060, 102 112, 150, 151 190, 260, 264	044, 055, 056 402, 452
8041.xxx	Single cylinder deadbolt	1.7	$118	$135
8011.xxx	Double cylinder deadbolt	1.9	$146	$164

STEEL CASE: .960″ Dia. x 3.312″ or 3.75″ extended (24 x 84 or 95mm)
FRONT: .156″ x 1″ x 2.25″ (4 x 25 x 57mm)

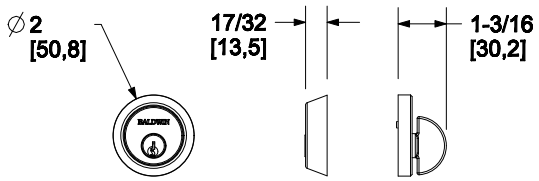

8250, 8251 Palm Springs Deadbolt – 2 ⅛″ Door Prep

8250

8251

Item #	Description	Wt.	003, 031, 033 050, 060, 102 112, 150, 151 190, 260, 264	044, 055, 056 402, 452
8250.xxx	Single cylinder deadbolt	1.7	$141	$158
8251.xxx	Double cylinder deadbolt	1.9	$170	$187

STEEL CASE: .960″ Dia. x 3.312″ or 3.750″ extended (24 x 84 or 95mm)
FRONT: .156″ x 1″ x 2.25″ (4 x 25 x 57mm)

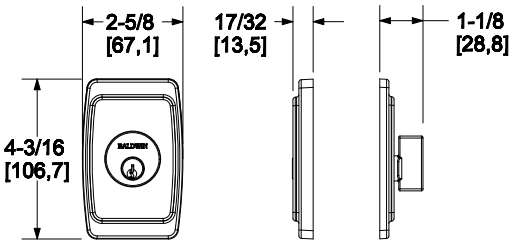

8241, 8242 Contemporary Deadbolt – 2 ⅛″ Door Prep

QUICK SHIP

8241

8242

8241.xxx.PAT

Item #	Description	Wt.	003, 031, 033 050, 060, 102 112, 150, 151 190, 260, 264	044, 055, 056 402, 452
8241.xxx	Single cylinder deadbolt	2.1	$118	$135
8242.xxx	Double cylinder deadbolt	2.4	$146	$164
8241.xxx.PAT	Patio deadbolt	1.1	$89	$99

STEEL CASE: .960″ Dia. x 3.312″ or 3.750″ extended (24 x 84 or 95mm)
FRONT: .156″ x 1″ x 2.25″ (4 x 25 x 57mm)

Patio Deadbolt: Refer to instruction sheet for special door preparation

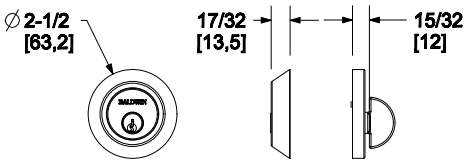

*QUICK SHIP is available in limited functions and finishes.
For complete listing, please refer to page 272.

8021, 8031 Traditional Deadbolt – 1 ⅝″ Door Prep

8031

8021

Item #	Description	Wt.	003, 031, 033 050, 060, 102 112, 150, 151 190, 260, 264	044, 055, 056 402, 452
8031.xxx	Single cylinder deadbolt	1.8	$118	$135
8021.xxx	Double cylinder deadbolt	2.0	$146	$164

STEEL CASE: .960″ Dia. x 3.312″ or 3.750″ extended (24 x 84 or 95mm)
FRONT: .156″ x 1″ x 2.25″ (4 x 25 x 57mm)

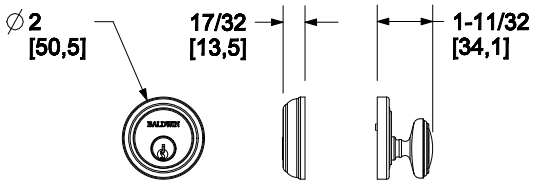

8231, 8232 Traditional Deadbolt – 2 ⅛″ Door Prep

QUICK SHIP

8231

8232

8231.xxx.PAT

Item #	Description	Wt.	003, 031, 033 050, 060, 102 112, 150, 151 190, 260, 264	044, 055, 056 402, 452
8231.xxx	Single cylinder deadbolt	2.2	$118	$135
8232.xxx	Double cylinder deadbolt	2.4	$146	$164
8231.xxx.PAT	Patio deadbolt	1.1	$89	$99

STEEL CASE: .960″ Dia. x 3.312″ or 3.75″ extended (24 x 84 or 95mm)
FRONT: .156″ x 1″ x 2.25″ (4 x 25 x 57mm)

Patio Deadbolt: Refer to instruction sheet for special door preparation

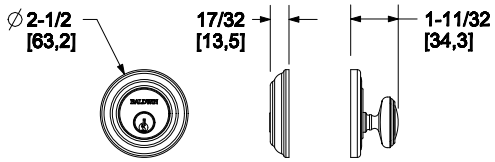

8237, 8238 Bethpage™ Deadbolt – 2 ⅛″ Door Prep

8237

8238

Item #	Description	Wt.	003, 031, 033 050, 060, 102 112, 150, 151 190, 260, 264	044, 055, 056 402, 452
8237.xxx	Single cylinder deadbolt	2.1	$141	$158
8238.xxx	Double cylinder deadbolt	2.4	$170	$187

NOT AVAILABLE FOR 1 ⅜" THICK DOORS.
STEEL CASE: .960″ Dia. x 3.312″ or 3.750″ extended (24 x 84 or 95mm)
FRONT: .156″ x 1″ x 2.25″ (4 x 25 x 57mm)
COLLAR DIMENSION: 2.63″W X 3.25″H X 0.5″ THICK (66 X 81 X 13mm)

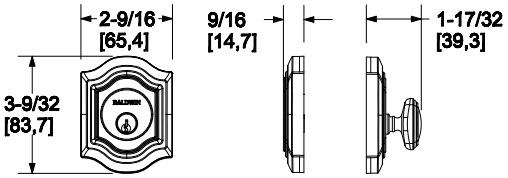

*QUICK SHIP is available in **limited functions and finishes.**
For complete listing, please refer to page 272.

DEADBOLTS

8252, 8253 Arched Deadbolt – 2 ⅛″ Door Prep

QUICK SHIP

8252

8253

Item #	Description	Wt.	003, 031, 033 050, 060, 102 112, 150, 151 190, 260, 264	044, 055, 056 402, 452
8252.xxx	Single cylinder deadbolt	2.0	$141	$158
8253.xxx	Double cylinder deadbolt	2.0	$170	$187

NOT AVAILABLE FOR 1 ⅜" THICK DOORS.
STEEL CASE: .960″ Dia. x 3.312″ or 3.750″ extended (24 x 84 or 95mm)
FRONT: .156″ x 1″ x 2.25″ (4 x 25 x 57mm)
COLLAR DIMENSION: 2.75″W X 3.62″H X 0.5″ THICK (70 X 92 X 13mm)

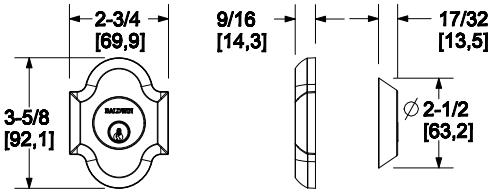

8254, 8255 Squared Deadbolt – 2 ⅛″ Door Prep

QUICK SHIP

8254

8255

Item #	Description	Wt.	003, 031, 033 050, 060, 102 112, 150, 151 190, 260, 264	044, 055, 056 402, 452
8254.xxx	Single cylinder deadbolt	2.0	$141	$158
8255.xxx	Double cylinder deadbolt	2.0	$170	$187

NOT AVAILABLE FOR 1 ⅜" THICK DOORS.
STEEL CASE: .960″ Dia. x 3.312″ or 3.750″ extended (24 x 84 or 95mm)
FRONT: .156″ x 1″ x 2.25″ (4 x 25 x 57mm)
COLLAR DIMENSION: 2.73″W X 3.62″H X 0.5″ THICK (70 X 92 X 13mm)

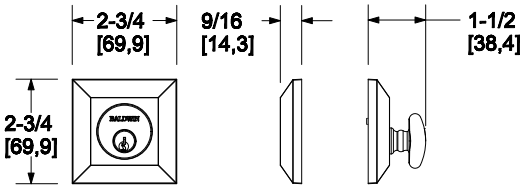

8260, 8261 Hollywood Hills - 2 1/8" Door Prep

QUICK SHIP

8260

8261

Item #	Description	Wt.	003, 031, 033 050, 060, 102 112, 150, 151 190, 260, 264	044, 055, 056 402, 452
8260.xxx	Single cylinder deadbolt		$153	$170
8261.xxx	Double cylinder deadbolt		$176	$193

NOT AVAILABLE FOR 1 ⅜" THICK DOORS.
STEEL CASE: .960″ Dia. x 3.312″ or 3.75″ extended (24 x 84 or 95mm)
FRONT: .156″ x 1″ x 2.25″ (4 x 25 x 57mm)
COLLAR DIMENSION: 2.75″W X 2.88″H X 0.5″ THICK (70 X 73 X 13mm)

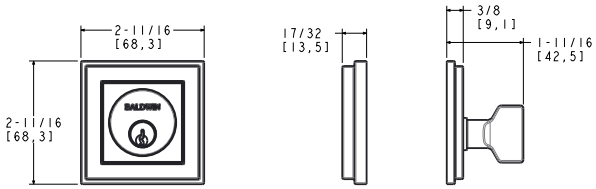

*QUICK SHIP is available in limited functions and finishes.
For complete listing, please refer to page 272.

8285, 8286 Soho Deadbolt – 2 ⅛″ Door Prep

QUICK SHIP

8285

8286

Item #	Description	Wt.	003, 031, 033 050, 060, 102 112, 150, 151 190, 260, 264	044, 055, 056 402, 452
8285.xxx	Single cylinder deadbolt	2.2	$141	$158
8286.xxx	Double cylinder deadbolt	2.4	$170	$187

NOT AVAILABLE FOR 1 ⅜" THICK DOORS.
STEEL CASE: .960″ Dia. x 3.312″ or 3.75″ extended (24 x 84 or 95mm)
FRONT: .156″ x 1″ x 2.25″ (4 x 25 x 57mm)
COLLAR DIMENSION: 2.75″W X 2.88″H X 0.5″ THICK (70 X 73 X 13mm)

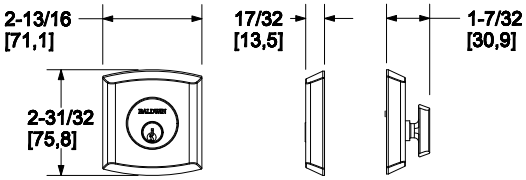

DEADBOLTS, EXPLODED VIEWS

Double Cylinder Deadbolt

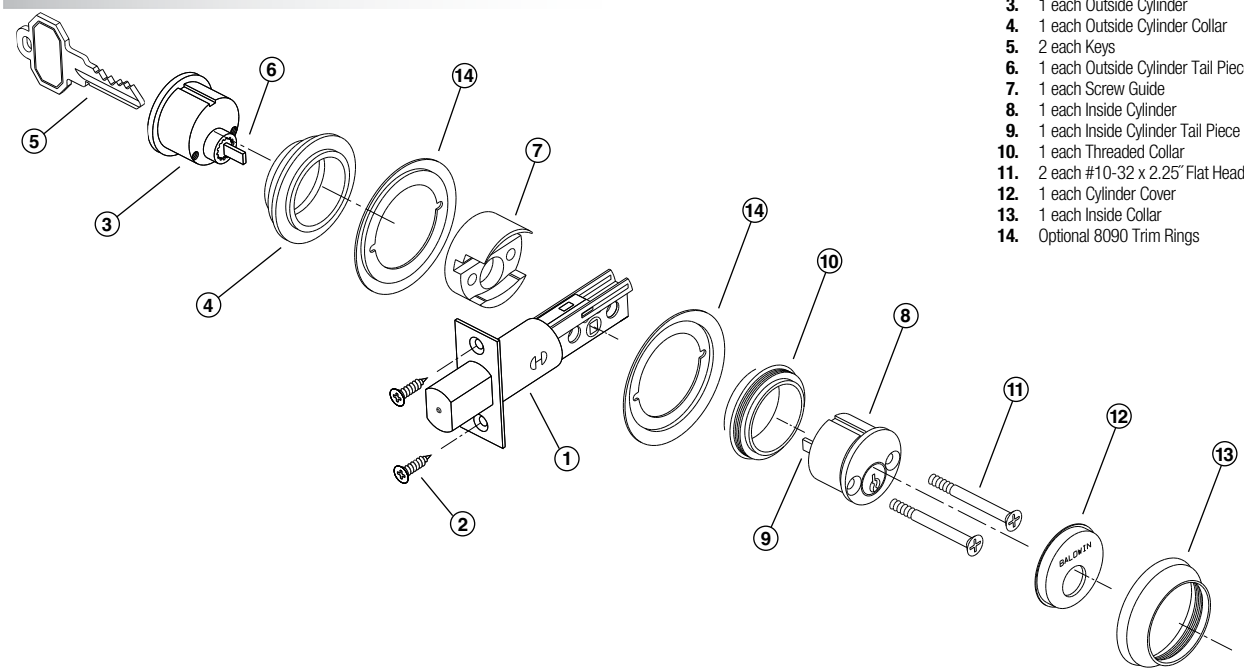

1. 1 each Adjustable Backset Deadbolt
2. 4 each #8.75″ Flathead Combination Screws
3. 1 each Outside Cylinder
4. 1 each Outside Cylinder Collar
5. 2 each Keys
6. 1 each Outside Cylinder Tail Piece
7. 1 each Screw Guide
8. 1 each Inside Cylinder
9. 1 each Inside Cylinder Tail Piece
10. 1 each Threaded Collar
11. 2 each #10-32 x 2.25″ Flat Head Machine Screws
12. 1 each Cylinder Cover
13. 1 each Inside Collar
14. Optional 8090 Trim Rings

Single Cylinder Deadbolt

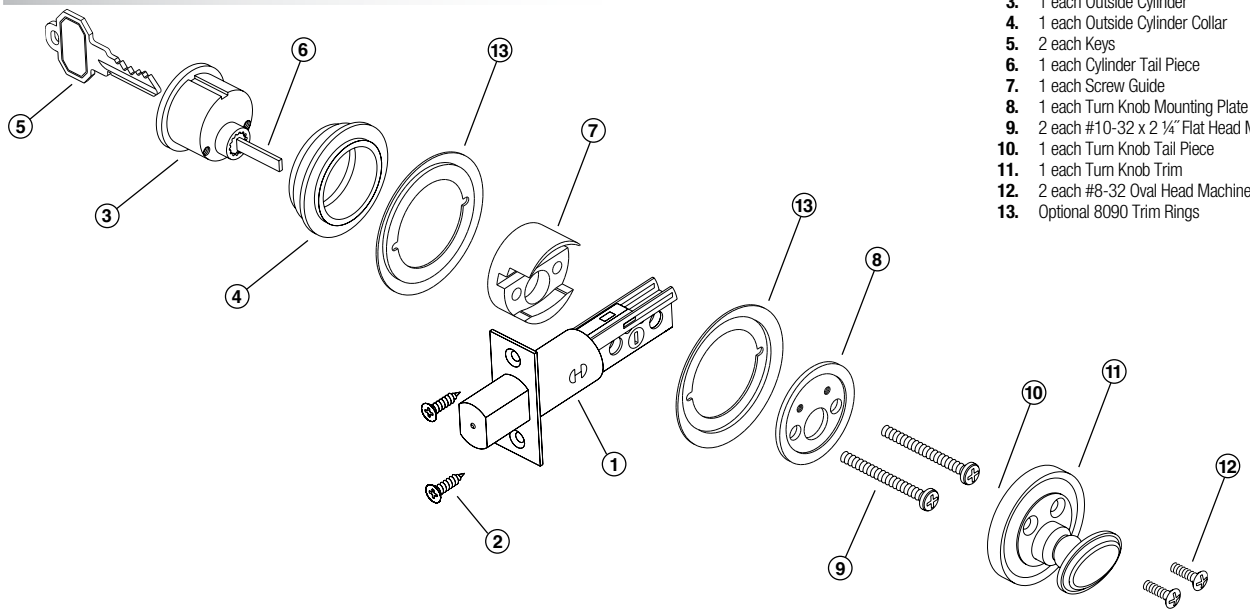

1. 1 each Adjustable Backset Deadbolt
2. 2 each #8-32 x ¾″ Flat Head Machine Screws
3. 1 each Outside Cylinder
4. 1 each Outside Cylinder Collar
5. 2 each Keys
6. 1 each Cylinder Tail Piece
7. 1 each Screw Guide
8. 1 each Turn Knob Mounting Plate
9. 2 each #10-32 x 2 ¼″ Flat Head Machine Screws
10. 1 each Turn Knob Tail Piece
11. 1 each Turn Knob Trim
12. 2 each #8-32 Oval Head Machine Screws
13. Optional 8090 Trim Rings

Cylinder Exploded View

CYLINDER CAP TOOL

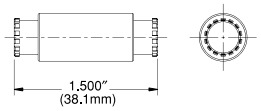

No. 8475.000.001

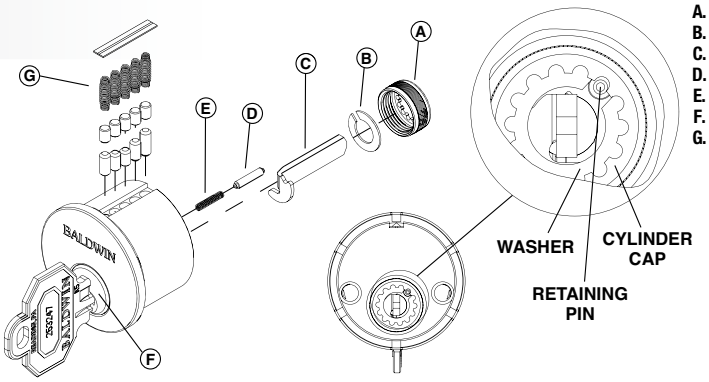

A. Cylinder Plug Cap (8011.039.0027)
B. Washer (8011.028.0025)
C. Tail Piece
D. Retaining Pin (8011.039.0023)
E. Spring (8011.109.0022)
F. Cylinder Plug
G. Tumbler Springs (8300.109.005)

***QUICK SHIP** is available in **limited functions and finishes.**
For complete listing, please refer to page 272.

ENTRANCE SET & DEADBOLT ACCESSORIES

Strikes, Cylinders & Turnpiece Components

Item #	Description	U/M.	Wt.	003, 050, 102 112, 150, 151 190, 260, 264	402 452	055 056	Other Finishes (As Marked)
8000.xxx.RSTR	Radius corner deadbolt strike	each	0.2	$12	$12	—	—
8000.xxx.STR	Standard security deadbolt strike	each	0.2	$12	$12	—	—
8000.849.STR3	Dust box	each	0.1	—	—	—	$6

Item #	Description	U/M.	Wt.	003, 050, 102 112, 150, 151 190, 260, 264	402 452	055 056	Other Finishes (As Marked)
8011.xxx.0020	Inside cylinder	each	0.1	$18	—	$18	—
8011.039.0021	Cylinder threaded sleeve for mounting inside of double cylinder deadbolt	each	0.2	—	—	—	$9
8011.109.0031	Tumbler springs	100/ pkg	0.1	—	—	—	$25
8030.xxx.0003	Traditional outside cylinder collar	each	2.0	$35	$35	$41	060 = $35
8030.xxx.0005	Traditional inside cylinder collar	each	2.0	$35	$35	$41	060 = $35
8030.xxx.0510	Traditional turn knob assembly	each	0.3	$76	$76	$76	—
8031.028.TP11	Turn piece tail piece, older style handleset	each		—	—	—	$3
8031.509.SH18	Pan head thru-bolt	each	0.1	—	—	—	$3
8040.xxx.0004	Contemporary round outside cylinder collar	each	0.3	$35	$35	$41	060 = $35
8040.xxx.0006	Contemporary round inside cylinder collar	each	0.2	$35	$35	$41	—
8040.xxx.0510	Contemporary round turn knob assembly	each	0.3	$76	$76	$76	—
8237.xxx.0510	Bethpage turn knob	each	0.4	$76	$76	$76	—
8053.028.TP1	Cylinder tail piece for double cylinder deadbolt — up to 2 ¼″ doors	each	0.2	—	—	—	$4 NET
8053.028.TP4	Cylinder tail piece for single cylinder deadbolt — 1 ¾″ doors	each	0.2	—	—	—	$4 NET
8053.028.TP525	Cylinder tail piece for single cylinder deadbolt — 1 ⅞″ to 2 ¼″ doors	each	0.2	—	—	—	$4 NET
8053.028.TP3	Cylinder tail piece for single cylinder deadbolt — 1 ⅜″ doors	each	0.2	—	—	—	$4 NET
8031.028.TP31	Patio Tailpiece for a 2 1/4 thick door	each	0.2	—	—	—	$4 NET
8053.028.TP2	Cylinder tail piece for egress	each	0.1	—	—	—	$4 NET
8031.xxx.KD12	Cylinder and tail piece for non-egress handleset and single cylinder deadbolts	each	0.5	$41	$48	—	—
8031.xxx.KD22	Cylinder and tail piece for egress handlesets	each	0.5	$41	$48	—	—
8011.xxx.KD12	Double cylinder for handlesets and deadbolts	each	0.8	$82	$94	—	—
8475.000.001	Cylinder cap tool	each	0.1	—	—	—	$6 NET

UL Deadbolts Kit

UL certified tubular products can be ordered by adding a UL kit to our standard deadbolt or select Estate passage or privacy sets. Our UL products are rated a 3hr fire rating when used on fire rated doors.

UL DEADBOLTS KIT

c UL us LISTED

Item #	Description	003, 031, 033 050, 060, 102 112, 150, 151 190, 260, 264	044, 055, 056
U8201.xxx.DB	UL Kit for single cylinder deadbolt - 2 1/8" door prep	$35	$41
U8202.xxx.DB	UL Kit for double cylinder deadbolt - 2 1/8" door prep	$35	$41
U8208.xxx.DB	UL Kit for single cylinder deadbolt - 1 5/8" door prep	$35	$41
U8209.xxx.DB	UL Kit for double cylinder deadbolt - 1 5/8" door prep	$35	$41

For 402 or 452 finishes, please substitute with a 102 or 152 finish respectively.

INCLUDED:
Deadbolt latch with UL faceplate, UL Shield and rotation stop

ORDERING INSTRUCTIONS:
1. Choose your deadbolt: eg. 8231.003 - Traditional Deadbolt, single cylinder, 2 ⅛" door prep
2. Choose the appropriate deadbolt kit: U8201.003.DB – UL kit for single cylinder, 2 ⅛" door prep

Other examples:
8041.260 – Contemporary deadbolt, single cylinder, 1 ⅝" door prep
U8208.260.DB – UL kit for single cylinder, 1 ⅝" door prep
8238.112 – Bethpage deadbolt, double cylinder, 2 ⅛" door prep
U8202.112.DB – UL kit for double cylinder, 2 ⅛" door prep

NOTE: All components from the deadbolt kit must be installed for UL certification.

DEADBOLT ACCESSORIES

8090, 8097, 8098, 8297 Trim Rings & Collars

Item #	Description	U/M.	Wt.	003, 050, 102 112, 150, 151 190, 260, 264	402 452	055 056	Other Finishes (As Marked)
8080.xxx	Deadbolt Trim	pair	1.5	$99	—	$112	—
8090.xxx	Trim rings for 2 ⅛″ hole	pair	0.2	$18	$18	$18	—
8097.xxx	Cylinder collar spacer for 1 ⅜″ thick doors for 80xx series deadbolts (1 ⅝″ prep)	each	0.2	$18	$18	$18	—
8098.000.DC03	Double cylinder Conversion kit for 2″ & 2 ¼″ thick doors	each	0.1	—	—	—	000 = $6
8098.000.TP03	Single Cylinder/Turn Piece Conversion kit for 2″ & 2 ¼″ thick doors	each	0.1	—	—	—	000 = $6
8297.xxx	Cylinder collar spacer for 1 ⅜″ thick doors for 82xx series deadbolts (2 ⅛″ prep)	each	0.3	$25	—	$25	

8090

8097

8098.000.DC03

8098.000.TP03

8297

	Function	Door Thickness
8098.xxx.DC03	Double Cylinder	2″ (51mm) & 2.25″ (57mm)
8098.xxx.TP03	Cylinder / Turn Piece	

8090.xxx – Trim Rings

Dimensions: 2.5″ Dia. (64mm)

Features: Trim Rings are designed for use with installation of 8000 Series (1.625″ {41mm} door prep) Deadbolts in 2.125″ (54mm) diameter door preparation. One pair of rings is required for use in this application for either Double Cylinder or Cylinder/Turn piece functions. Rings are finished to match Deadbolts.

Weight: 2 lb. (.09kg)

NOTE: 8090 Trim rings are not required for 8200 series deadbolts.

8097.xxx – Cylinder Collar Spacer For 8000 Series Deadbolts – For 1.375″ (35mm) Door

Dimensions: 2″ Dia. (51mm)

Features: For installation on 1.375″ (35mm) doors. Always used under Cylinder Collar. Two Rings are required for Double Cylinder functions. One Ring is required for Cylinder/Turn piece functions. Finished to match deadbolt cylinder collar. Available at an extra charge.

Weight: .2 lb. (.09kg)

8098.xxx – Conversion Kits for 2″ and 2.25″ doors

Packed: One per box.

8297.xxx – Cylinder Collar Spacer For 8200 Series Deadbolts – For 1.375″ (35mm) Door

Dimensions: 2.5″ Dia. (64mm)

Features: For installation on 1.375″ (35mm) doors. Always used under Cylinder Collar. Two Rings are required for Double Cylinder functions. One Ring is required for Cylinder/Turn piece functions. Finished to match deadbolt cylinder collar. Available at an extra charge.

Weight: .3 lb. (.14kg)

8201, 8208 Deadbolts

Item #	Description	U/M.	Wt.	003, 050, 102 112, 150, 151 190, 260, 264	402 452	055 056
8201.xxx.DB	Adjustable deadbolt for double cylinder & patio	each	0.6	$41	—	$48
8208.xxx.DB	Adjustable deadbolt for single cylinder	each	0.6	$41	—	$48

8201 & 8208

	Adjustable Backset	Front Length	Front Width	Type of Lockset
8201.xxx.DB	2.375″ or 2.75″	2.25″ (57mm)	1″ (25mm)	Double
8208.xxx.DB				Single

Features: All Deadbolts are furnished with a 1″ (25mm) throw. Each contains a saw-proof, hardened steel insert to prevent tampering. Fronts are adjustable for beveled door conditions. All deadbolts have an adjustable backset feature to accommodate 2.375″ or 2.75″ backsets.

Packed: Without fasteners.

Weight: .6 lb. (.27kg)

NOTES

GENERAL HARDWARE

LETTER BOX PLATES & SLEEVE

0012 Letter Box Plate

0012

exterior

interior

Item #	Description	Per Box	Wt.	003, 031, 033, 050 060, 102, 112 140, 150, 151 190, 260, 264	044 055 056
0012.xxx	Letter Box Plate, 13˝ x 3.625˝	1	2(lbs)	$123	$142

Package size – Spring tension design – Heavy gauge wrought brass
13˝ x 3.625˝ (330 x 92mm), Inside opening: 11.562˝ x 2.812˝ (279 x 51mm)

FEATURES: Very large opening will accommodate small packages.
Bronze spring keeps flap tightly closed at all times and permits vertical installation.

0014 Letter Box Plate

0014

exterior

interior

Item #	Description	Per Box	Wt.	003, 031, 033, 050 060, 102, 112 140, 150, 151 190, 260, 264	044 055 056
0014.xxx	Letter Box Plate, 13˝ x 3.625˝	1	2.5 (lbs)	$158	$184

Package size – Spring tension design w/ covered hinging back plate – Heavy gauge wrought brass
13˝ x 3.625˝ (330 x 92mm), Inside opening: 11.562˝ x 2.812˝ (279 x 51mm)

FEATURES: In addition to the features of 0012, the hinging back plate provides additional privacy and decorative appearance. Not suitable for vertical installation.

0015 Letter Box Plate

0015

exterior

interior

Item #	Description	Per Box	Wt.	003, 031, 033, 050 060, 102, 112 140, 150, 151 190, 260, 264	044 055 056
0015.xxx	Letter Box Plate, 10˝ x 3˝	1	1(lb)	$112	$130

Magazine size – Spring tension design – Heavy gauge wrought brass
10˝ x 3˝ (254 x 92mm), Inside opening: 8.25˝ x 2.375˝ (191 x 51mm)

FEATURES: Bronze spring keeps flap tightly closed at all times and permits vertical installation.

0017 Letter Box Plate

0017

exterior

interior

Item #	Description	Per Box	Wt.	003, 031, 033, 050 060, 102, 112 140, 150, 151 190, 260, 264	044 055 056
0017.xxx	Letter Box Plate, 10˝ x 3˝	1	1.5 (lbs)	$146	$173

Magazine size – Spring tension design w/ covered hinging back plate – Heavy gauge wrought brass
10˝ x 3˝ (254x 76mm), Inside opening: 7.5˝ x 2˝ (191 x 51mm)

FEATURES: In addition to the features of 0015, the hinging back plate provides additional privacy and decorative appearance. Not suitable for vertical installation.

0050, 0052 Letterbox Sleeve

0050, 0052

Item #	Description	Per Box	Wt.	324
0050.324	Letter Box Sleeve, fits 0015 & 0017	1	0.5 (lb)	$37
0052.324	Letter Box Sleeve, fits 0012 & 0014	1	0.5 (lb)	$42

0050.324: 8.0625˝ L x 2.25˝ W x 1.6875˝ D (205 x 57 x 43mm) - Fits our Letter Box Plates Nos. 0015 and 0017.
0052.324: 11.375˝ L x 2.75˝ W x 1.6875˝ D (289 x 70 x 43mm) - Fits our Letter Box Plates Nos. 0012 and 0014.

FEATURES:Made of stainless steel. Stocked for 1.75˝ (44mm) thick doors.

PACKED: One (1) per box with sheet metal screws.

DOOR KNOCKERS

0102, 0103 Colonial Knocker

0102, 0103

Item #	Description	Per Box	Wt.	003, 031, 033, 050 060, 102, 112 140, 150, 151 190, 260, 264	044, 055, 056 402, 452
0102.xxx	Colonial Knocker	1	1	$74	$88
0103.xxx	Colonial Knocker w/ Observascope	1	1	$95	$113

SIZE: 6.5″ x 3.5″ (165 x 89mm)
CTC OF BOLTS: 4″ (102mm)
PACKED: One (1) in a box, poly-bagged, with proper fasteners for 1.75" thick doors

0105 Knocker

0105

Item #	Description	Per Box	Wt.	003, 031, 033, 050 060, 102, 112 140, 150, 151 190, 260, 264	044, 055, 056 402, 452
0105.xxx	Knocker	1	1.9	$102	$121

SIZE: 5.5″ x 4.0″ (140 x 102mm)
CTC OF BOLTS: 4″ (102Amm)
PACKED: One (1) in a box, poly-bagged, with proper fasteners for 1.75" thick doors

0106 French Knocker

0106

Item #	Description	Per Box	Wt.	003, 031, 033, 050 060, 102, 112 140, 150, 151 190, 260, 264	044, 055, 056 402, 452
0106.xxx	French Knocker	1	1	$81	$95

SIZE: 7.5″ x 2.5″ (190 x 64mm)
CTC OF BOLTS: 5.7″ (144mm)
PACKED: One (1) in a box, poly-bagged, with proper fasteners for 1.75" thick doors

0113 "S" Knocker

0113

Profile

Item #	Description	Per Box	Wt.	003, 031, 033, 050 060, 102, 112 140, 150, 151 190, 260, 264	044, 055, 056 402, 452
0113.xxx	"S" Knocker	1	1.8	$161	$191

SIZE: 2″ dia. base (51mm), 7.8″ ht. (197mm), 2.8″ projection (70mm)
CTC OF BOLTS: 4.75″ (120mm)
PACKED: One (1) in a box, poly-bagged, with proper fasteners for 1.75" thick doors

0116 Imperial Knocker

0116

Item #	Description	Per Box	Wt.	003, 031, 033, 050 060, 102, 112 140, 150, 151 190, 260, 264	044, 055, 056 402, 452
0116.xxx	Imperial Knocker	1	1.2	$93	$108

SIZE: 8.5″ x 4.125″ (216 x 104mm)
CTC OF BOLTS: 4.75″ (121mm)
PACKED: One (1) in a box, poly-bagged, with proper fasteners for 1.75" thick doors

DOOR KNOCKERS | BELL BUTTONS

0195 Ring Knocker

0195

Item #	Description	Per Box	Wt.	003, 031, 033, 050 060, 102, 112 140, 150, 151 190, 260, 264	044, 055, 056 402, 452
0195.xxx	Ring Knocker	1	1.5	$139	$164

SIZE: 4.25″ x 5.5″ (108 x 140mm)

CTC OF BOLTS: 3.75″ (95mm)

PACKED: One (1) in a box, poly-bagged, with proper fasteners for 1.75" thick doors

0155, 0156 Observascope

0155

0156

Item #	Description	Per Box	Wt.	030, 260
0155.xxx	Observ-O-Scope (doors <2.25″ thick)	10	0.06	$18
0156.xxx	Observ-O-Scope (doors 2.25-3.25″ thick)	10	0.06	$20

SIZE: .5″ (13mm) diameter quality lens.

FEATURES: Exterior lens constructed of scientific glass to prohibit scratching while creating a field of vision exceeding 160˚. All viewers are furnished with a shutter.

INSTALLATION: Drill a .5″ (13mm) hole completely through the door; insert the lens portion into the exterior side and the slotted scope portion through the interior side. Tighten together with a standard screwdriver.

4850 Beaded Bell Button

4850

Item #	Description	Per Box	Wt.	003, 031, 033, 050 060, 102, 112 140, 150, 151 190, 260, 264	044, 055, 056 402, 452
4850.xxx	Beaded Bell Button	1	0.1	$52	$60

SIZE: 1.75″ (44mm)

FEATURES: Solid brass construction, Antique White button always illuminated for night detection.

PACKED: Individually poly-bagged. All bags are coded with product number, description and UPC codes.

ELECTRICAL: Switch is rated at 16V. DC

4851 Round Bell Button

4851

Item #	Description	Per Box	Wt.	003, 031, 033, 050 060, 102, 112 140, 150, 151 190, 260, 264	044, 055, 056 402, 452
4851.xxx	Round Bell Button	1	0.1	$49	$57

SIZE: 1.75″ (44mm)

FEATURES: Solid brass construction, Antique White button always illuminated for night detection.

PACKED: Individually poly-bagged. All bags are coded with product number, description and UPC codes.

ELECTRICAL: Switch is rated at 16V. DC

4852 Oval Bell Button

4852

Item #	Description	Per Box	Wt.	003, 031, 033, 050 060, 102, 112 140, 150, 151 190, 260, 264	044, 055, 056 402, 452
4852.xxx	Oval Bell Button	1	0.1	$49	$57

SIZE: 2″ x 1.125″ (51 x 29mm)

FEATURES: Solid brass construction, Antique White button always illuminated for night detection.

PACKED: Individually poly-bagged. All bags are coded with product number, description and UPC codes.

ELECTRICAL: Switch is rated at 16V. DC

BELL BUTTONS | HOUSE NUMBERS

4853 Rectangular Bell Button

4853

Item #	Description	Per Box	Wt.	003, 031, 033, 050 060, 102, 112 140, 150, 151 190, 260, 264	044, 055, 056 402, 452
4853.xxx	Rectangular Bell Button	1	0.1	$38	$46

SIZE: 2.25″ x 1″ (57 x 25mm)
FEATURES: Solid brass construction, Antique White button always illuminated for night detection.
PACKED: Individually poly-bagged. All bags are coded with product number, description and UPC codes.
ELECTRICAL: Switch is rated at 16V. DC

4858 Oval Bell Button

4858

Item #	Description	Per Box	Wt.	003, 031, 033, 050 060, 102, 112 140, 150, 151 190, 260, 264	044, 055, 056 402, 452
4858.xxx	Oval Bell Button	1	0.2	$57	$67

SIZE: 3″ x 1.75″ (76 x 43mm)
FEATURES: Solid brass construction, Antique White button always illuminated for night detection.
PACKED: Individually poly-bagged. All bags are coded with product number, description and UPC codes.
ELECTRICAL: Switch is rated at 16V. DC

House Numbers

Item #	Description	Per Box	Wt.	003, 031, 033, 050 060, 102, 112 140, 150, 151 190, 260, 264	044, 055, 056 402, 452
90670.xxx.CD	House Number - 0	1	0.6	$25	$28
90671.xxx.CD	House Number - 1	1	0.6	$25	$28
90672.xxx.CD	House Number - 2	1	0.6	$25	$28
90673.xxx.CD	House Number - 3	1	0.6	$25	$28
90674.xxx.CD	House Number - 4	1	0.6	$25	$28
90675.xxx.CD	House Number - 5	1	0.6	$25	$28
90676.xxx.CD	House Number - 6	1	0.6	$25	$28
90677.xxx.CD	House Number - 7	1	0.6	$25	$28
90678.xxx.CD	House Number - 8	1	0.6	$25	$28
90679.xxx.CD	House Number - 9	1	0.6	$25	$28

FEATURES: 4.75″ tall solid forged brass residential house numbers applied with truss head wood screws.
PROJECTION: .312″ (8mm
PACKED: Includes fasteners

DOOR GUARDS | SURFACE BOLTS

0250 Security Door Guard

0250

Item #	Description	Per Box	Wt.	003, 031, 033, 050 060, 102, 112 140, 150, 151 190, 260, 264	044
0250.xxx	Security Door Guard	1	0.5	$37	$45

SIZE: Jamb Plate: 1″ x 2.625″ (25 x 67mm)

ARM LENGTH: Center of Rivets/Jamb Plate to End of Arm: 4.625″ (117mm)

STRIKE PLATE: 1.187″ x 1.187″ (30 x 30mm)

STRIKE LENGTH: 3.062″ (78mm)

FEATURES: Allows door to be opened up to 4″ while maintaining security. Hinges onto a strike mounted on door, eliminating scratching caused by conventional chain door fasteners. When not in use, the hinged door guard is positioned 180° away from door.

PACKED: Individually poly-bagged with sheet metalscrews. All bags are coded with product number, description and UPC codes.

0310 Strikes

HDAS

ANGL

MORT

SURF

UNIV

Item #	Description	Per Box	Wt.	003, 031, 033, 050 060, 102, 112 140, 150, 151 190, 260, 264	044
0310.xxx.HDAS	Strike – Heavy Duty Angle Use with: 0344, 0345, 0346, 0370, 0378, 0379, 0380, 0381, 0382, 0383	1		$19	$21
0310.xxx.ANGL	Strike – Angle Use with: 0344, 0345, 0346, 0370, 0378, 0379, 0380, 0381, 0382, 0383	1		$19	$21
0310.xxx.MORT	Strike – Mortise Use with: 0345, 0370, 0378, 0379, 0380, 0381, 0382, 0383	1		$19	$21
0310.xxx.SURF	Strike – Surface Use with: 0344, 0345, 0346, 0370, 0378, 0379, 0380, 0381, 0382, 0383	1		$19	$21
0310.xxx.UNIV	Strike – Universal Use with: 0344, 0345, 0346, 0370, 0378, 0379, 0380, 0381, 0382, 0383	1		$19	$21

0320 Strikes

MORT

UNIV

Item #	Description	Per Box	Wt.	003, 031, 033, 050 060, 102, 112 140, 150, 151 190, 260, 264	044
0320.xxx.MORT	Strike – Mortise Use with: 0321, 0322, 0324	10		$12	$15
0320.xxx.UNIV	Strike – universal Use with: 0321, 0322, 0324	10		$12	$15

0321, 0322 General Purpose Surface Bolts

Supplied w/0320 Strikes

0321,0322

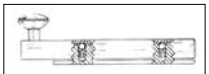

SPRING CONSTRUCTION

Item #	Description	Per Box	Wt.	003, 031, 033, 050 060, 102, 112 140, 150, 151 190, 260, 264	044
0321.xxx	Surface Bolt – 3″	10	1.8	$30	$33
0322.xxx	Surface Bolt – 4″	10	2.2	$31	$34

SIZES: .5″ (13mm) width rod, .5″ (13mm) width of guide, .875″ (22mm) throw.

FEATURES: Mounted on a fully concealed guide of special design. Fasteners are not visible.

PACKED: Includes Universal and Mortise Strikes and screws.

BHMA DESIGNATION: L04151

SURFACE BOLTS

0379 – 0383 Ornamental Heavy Duty Surface Bolt

Supplied w/0310 Strike

0379 – 0383

Item #	Description	No. of Covers	Per Box	Wt.	003, 031, 033, 050 060, 102, 112 140, 150, 151 190, 260, 264	044
0379.xxx	Surface Bolt – 6″ (152mm)	2	5	3.5	$89	$104
0380.xxx	Surface Bolt – 8″ (203mm)	2	1	0.8	$112	$130
0381.xxx	Surface Bolt – 12″ (305mm)	3	1	1.2	$139	$164
0382.xxx	Surface Bolt – 18″ (457mm)	3	1	1.7	$161	$191
0383.xxx	Surface Bolt – 24″ (610mm)	4	1	1.9	$192	$223

SIZES: Width of rod: .625″ (16mm). Width of guide: 1.75″ (44mm).

FEATURES: Ornamental cover plates conceal mounting guides underneath the bolt without marring the surface of the rod. Large 1.25″ (32mm) diameter knob designed for easier operation. Heavy gauge strikes will take high abuse. 0378 and 0379 have smaller guide covers than shown on picture.

PACKED: Nos. 0378, 0379: 5 in a box with Universal and Mortise Strikes and screws. All others: One in a box with Universal and Mortise Strikes and screws.

STRIKES: Additional strikes are available at an extra charge. Consult price list.

0340

Item #	Description	Per Box	Wt.	003, 031, 033, 050 060, 102, 112 140, 150, 151 190, 260, 264	044, 056 402, 452
0340.xxx	Dutch Door Quadrant, 4" x 4.75"	1	0.7	$92	$94

SIZES: Base: 1.5″ x 2.5″ (38x64mm). Overall: 4″ x 4.75″ (102x121mm).
Length of bolt: 4.25″ (108mm). Bolt throw: 1.125″ (28mm).

FEATURES: Fully reversible, non-handed Double the tensile strength of ordinary sand castings.Self-lubricating nylon washer for positive constant tensionWhen bolt is in locked position, both pivot and keeper are in straight line.Specially designed tapered strike promotes secure interlock of top and bottomleaves of Dutch doors.

PACKED: One in a box with wood screws.

0345 Heavy Duty Dutch Door Bolt

Supplied w/0310 Strike

0345

SPRING CONSTRUCTION

Item #	Description	Per Box	Wt.	003, 031 033, 034, 050 060, 102, 112 140, 150, 151 190, 260, 264	044, 056 402, 452
0345.xxx	Dutch Door Bolt	5	3.8	$92	$94

SIZES: Rod width: .625″ (16mm). Guide width: 1.5″ (38mm).
Length of bolt: 4.25″ (108mm). Bolt throw: 1.125″ (28mm).

FEATURES: Our Dutch Door Bolt is made of heavy solid brass extrusions, precisely fitted for easier operation. When used on Dutch doors the leaves of doors are tightly joined by chamfered rod end. Proper amount of play is provided in strike allowing for misalignment of the two leaves. This prevents bolt from binding. Large and decorative 1.25″ (32mm) diameter knob is for easier handling.

PACKED:5 in a box with proper fasteners and strike as illustrated.

STRIKES: Universal, Angle, Mortise, and Surface Strikes available at an extra charge. Consult price list.

0392 – 0395 Flush Ring Pull

0392, 0393
0394, 0395

Item #	Description	Wt.	003, 031, 033, 050 060, 102, 112 140, 150, 151 190, 260, 264	044, 055, 056 402, 452
0392.xxx	Flush Ring Pull – 1.25″ x 1.5″	0.9	$28	$35
0393.xxx	Flush Ring Pull – 1.625″ x 1.625″	1	$27	$28
0394.xxx	Flush Ring Pull – 1.875″ x 2.5″	2.3	$37	$45
0395.xxx	Flush Ring Pull – 2.5″ x 3.3″	4.5	$49	$52

FEATURES: Solid forged construction for maximum strength and durability, Flush Ring Pulls, are recommended for marine use and where flush installation is essential.

PACKED: Includes wood screws.

BHMA DESIGNATION: J404

NOTES: Not intended to be used as a tie down.

0397 Flush Cup Handle & Ring Pull

0397

Item #	Description	Per Box	Wt.	003, 031, 033, 050 060, 102, 112 140, 150, 151 190, 260, 264	044, 055, 056 402, 452
0397.xxx	Flush Cup Handle (Brass) – 3.5″x 3.5″	1	0.9	$175	$188
0397.xxx.SOL	Flush Ring Pull for latches/locks w/solid spindle	1	0.9	$175	$188
0397.xxx.SWL	Flush Ring Pull for latches/locks w/swivel spindle	1	0.9	$175	$188

FEATURES: Solid forged construction for maximum strength and durability, Flush Ring Pulls, are recommended for marine use and where flush installation is essential.

PACKED: Includes wood screws.

BHMA DESIGNATION: J404

NOTES: Not intended to be used as a tie down.

IMPORTANT: No. 0397 Flush Ring Pull is specifically designed for use with mortise locks/ latches. Available only for back-to-back or single mounting applications on 2″ (51mm) minimum thick doors or 1.75″ (44mm) minimum thick doors with .25″ (6mm) minimum applied panel. Application must be designated when ordering.

EDGE PULL | ROLLER & BALL CATCHES

0465 Edge Pull

0465

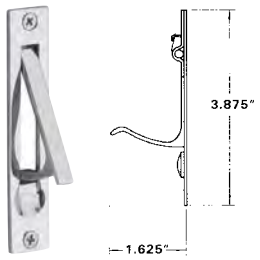

Item #	Description	Wt.	003, 031, 033, 050 060, 102, 112 140, 150, 151 190, 260, 264	044, 055, 056 402, 452
0465.xxx	Edge Pull – .75″ x 1.625″ x 3.875″	1.2	$19	$25

FEATURES: Specially designed spring loaded Edge Pull returns lever flush with face plate. Narrow design eliminates installation problems on thin door conditions. Intended for use on pocket door applications.

PACKED: Includes wood screws.

FEDERAL SPECIFICATION EQUIVALENTS: Government Type: 1861

BHMA DESIGNATION: D2801

NOTES: Not recommended for doors larger than 3.0' x 6'8″ x 1.75″ thick.

0425, 0426 Adjustable Ball Catch

0425
0426

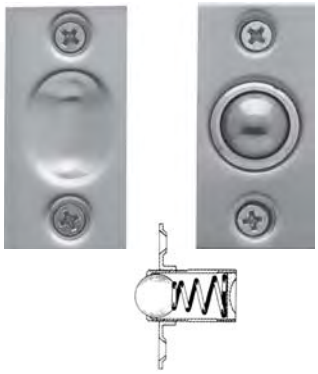

Item #	Description	Wt.	003, 031, 033, 050 060, 102, 112 140, 150, 151 190, 260, 264	044
0425.xxx	Adjustable Ball Catch (fitted in jamb)	2.1	$23	$29
0426.xxx	Adjustable Ball Catch (fitted in door)	2.2	$23	$29

SIZE: Face Plate: 1″ × 2.125″ (25 × 54mm)
Bore: .875″ dia. × 1.25″ long (22 × 32mm)
0425.xxx Strike: 1.06″ x 2.125″, Lip to Center: .56″
0426.xxx Strike: 1.375″ x 2.125″, Lip to Center: .875″

FEATURES: Dual adjustment ball bearing catch of excellent design takes advantage of rolling ball action for perfect tension. Infinite adjustments for compensation of various door clearances, swelling, shrinking, drafts and weights. Recommended for use on louvered, bi-folding, accordion, closet and light to medium service doors.

PACKED: Includes wood screws.

FEDERAL SPECIFICATION EQUIVALENTS: Government Type: 1861

BHMA DESIGNATION: D2801

NOTES: Not recommended for doors larger than 3.0' x 6'8″ x 1.75″ thick.

0440 Adjustable Roller Catch

0440

Item #	Description	Wt.	003, 031, 033, 050 060, 102, 112 140, 150, 151 190, 260, 264	044
0440.xxx	Adjustable Roller Catch	2.2	$28	$33

SIZE: Face Plate: 1″ × 2.25″ (25x57mm)
Bore: 1″ dia. × 1.625″ long (25x41mm)
Strike: 1.125″ × 2.75″ (29x70mm)
Lip to Center: 1.312″ (33mm)

FEATURES: Adjustable tension heavy duty roller catches made for cabinet, closet and interior doors. (Recommended for 1.375″ thick hollow core doors). Easily installed on thick doors. Smooth action. Fully adjustable from 3 lbs. (1.36kg) to 18 lbs. (8.16kg) of heading pressure. Equipped with durable nylon roller for quiet operation.

PACKED: Includes fasteners.

0430, 0432 Roller Latch
w/strike

0430
0432

with
0430

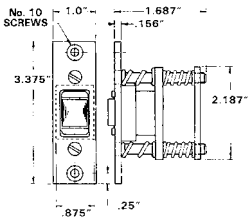

with
0432

Item #	Description	Wt.	003, 031, 033, 050 060, 102, 112 140, 150, 151 190, 260, 264	044
0430.xxx	Roller Latch w/ Full Lip Strike	0.7	$89	$94
0432.xxx	Roller Latch w/ t Strike	0.7	$89	$94

SIZE: 0432.xxx Lip To Center Dimension: 1.25″ (32mm).

FEATURES: Designed for use on interior doors in hospitals or where quiet operation is required. Very sturdy all forged brass construction throughout. Specifically compounded rubber roller silently engages the strike and holds the door firmly closed without the loud clicks of ordinary locks. The projection of the roller is adjustable for various door clearances. Specially designed adjusting screws mounted in the face plate permit fine and accurate tensioning of rubber after installation. Designed to ANSI template specifications.

PACKED: Includes wood screws and machine screws.

TEMPLATE: Doors/frames to be prepared in accordance with ANSI A115.1-1976 or A115.2-1980.

ORDERING INSTRUCTIONS: Item number listed under illustrated strike designates complete latch unit and strike. (Example: 0431 includes latch mechanism and ASA strike.)

FEDERAL SPECIFICATION EQUIVALENTS: Government Type: 193

BHMA DESIGNATION: EO9091

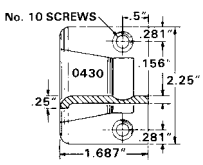

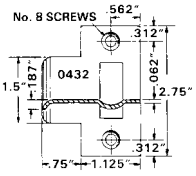

FLUSH & SASH PULLS

0452 Sash Lock

0452

Item #	Description	Wt.	003, 031, 033, 050 060, 102, 112 140, 150, 151 190, 260, 264	044, 402, 452
0452.xxx	Sash Lock	2.2	$21	$25

SIZE: Latch Base: .968″ × 2.437″ (25 × 62mm)
Strike Base: .656″ × 2.437″ (15 × 62mm)

PROJECTION: .906″ (23mm)

CTC OF HOLES: 2″ (51mm)

FEATURES: Traditional style sash lock with heavy duty spring to provide constant tension for a non-rattling fit. Center to center of mounting screws conforms to industry standards.

PACKED: Includes necessary fasteners.

BHMA DESIGNATION: L05121

0458 Flush Pull

0458

Item #	Description	Wt.	003, 031, 033, 050 060, 102, 112 140, 150, 151 190, 260, 264	044, 402, 452
0458.xxx	Flush Pull, 1.5″ x 3.5″	2.7	$28	$31

SIZE: Base: 1.5″ × 3.5″ (38 × 89mm)

THICKNESS OF FLANGE: .187″ (5mm)

FEATURES: Decorative flush pull designed to be used as a sash lift or sliding door pull if pocket allows clearance. Colonial design makes it suitable for Early American interiors. Extra heavy solid forged brass construction.

NOTE: Pull has .25″ projection

PACKED: Includes wood screws.

0470 Sash Lift

0470

Item #	Description	Wt.	003, 031, 033, 050 060, 102, 112 140, 150, 151 190, 260, 264	044, 402, 452
0470.xxx	Sash Lift, 4″ x 1.125″	1	$23	$25

SIZE: Base: 4″ × 1.125″ (102 × 29mm)

PROJECTION: .1″ (25mm)

PACKED: Includes wood screws.

FEDERAL SPECIFICATION EQUIVALENTS: Government Type: 1204

BHMA DESIGNATION: L05181

COSTUME HOOKS

0742, 0781, 0782 Costume Hook

0742

0781

0782

Item #	Description	Wt.	031, 033, 050 060, 102, 112 140, 150, 151 190, 260, 264	044, 402, 452
0742.xxx	Costume Hook, 5.375″ (137mm) h. x 3.5″ (89mm) p.	0.5	$34	$35
0781.xxx	Costume Hook, 2.875″ (73mm) h. x 3.25″ (83mm) p.	1.1	$31	$35
0782.xxx	Costume Hook, 2.1875″ (56mm) h. x 2.5″ (64mm) p.	1	$31	$32

HEIGHT: 2.25″ (57mm)
PROJECTION: 3″ (76mm)
FEDERAL SPECIFICATION EQUIVALENTS: Government Type: 1172
BHMA DESIGNATION: LO3111

FLUSH BOLTS & STRIKES

0950 – 0952 Swivel Type Cabin Door Hook

0950, 0951, 0952

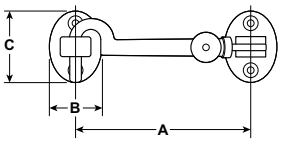

Item #	Description	Wt.	003, 031, 033, 050 060, 102, 112 140, 150, 151 190, 260, 264	044, 402, 452
0950.xxx	Cabin Door Hook – swivel type – 2.5″	1.5	$63	$69
0951.xxx	Cabin Door Hook – swivel type – 3.5″	3.4	$63	$69
0952.xxx	Cabin Door Hook – swivel type – 5.5″	5	$63	$69

FEATURES: These hooks are designed with a dual hinge action and tapered end to eliminate rattle and ensure secure fit

PACKED: Complete with wood screws.

Dimensions	A	B	C
0950.xxx	2.5″	0.84″	1.125″
0951.xxx	3.5″	1.125″	1.5″
0952.xxx	5.5″	1.25″	1.6″

0600, 0626 Flush Bolts

0600

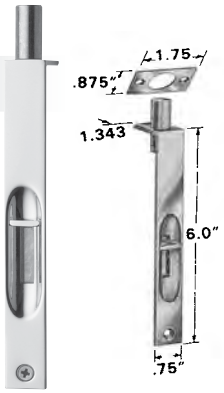

0626

Item #	Description	Wt.	003, 031, 033, 050 060, 102, 112 140, 150, 151 190, 260, 264	044, 402, 452
0600.xxx.12	Flush Bolt w/ 12″ Rod (Standard)	1.8	$63	$69
0600.xxx.18	Flush Bolt w/ 18″ Rod	1.8	$63	$69
0600.xxx.24	Flush Bolt w/ 24″ Rod	1.8	$63	$69
0626.xxx	Flush Bolt – 6″	3.8	$27	$28

0600.xxx

SIZE: Face Plate: 1″ × 6.75″ (25mm × 171mm).
Bolt Head: .5″ (13mm). Rod Backset: .75″ (19mm).

FEATURES: Hot forged extension bolt having over .75″ (19mm) throw. Unique push button design of lever and delay action for easy operation. Lever does not engage the bolt until it is hinged freely to 45 angle. At this position it is easy to move the bolt head. Lever snaps automatically when hinged beyond 45 angle. Made to template for easy installation in metal door frames. Use of strike optional.

PACKED: One in a box with 12″ (305mm) rods standard. Bolts packed with machine/wood screws for all conditions. Lengths given are from center of bolt mechanism with bolt retracted.

FEDERAL SPECIFICATION EQUIVALENTS: Government Type: 1049

BHMA DESIGNATION: LO4081

0626.xxx

SIZE: 1″ Throw, .47″ Backset of Rod, .5″ Bolt Head Diameter.

FEATURES: 6″ (152mm) length. Sharply defined edge and recess. Smooth working action with automatic holding spring for both retracted and projected positions.

PACKED: Individually poly-bagged with screws and strike, 10 in a box.

0602 – 0604 Rabbeted Parts

0602

0603

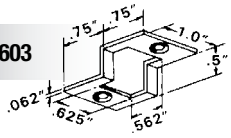

0604

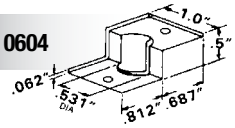

Item #	Description	Wt.	003, 031, 033, 050 060, 102, 112 140, 150, 151 190, 260, 264	044, 402, 452
0602.xxx	Rabbeted Piece for 0600 (Includes Screws)	0.8	$61	$73
0603.xxx	Rabbeted Strike		$61	$67
0604.xxx	Rabbeted Guide		$49	$51

0603.xxx, 0604.xxx

NOTE: All holes countersunk for no. 6F.M. screws.

0622 Locking Type Dustproof Strike

0622

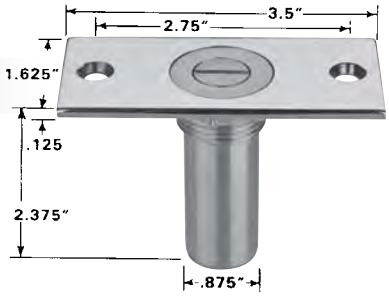

Item #	Description	Wt.	003, 031, 033, 050 060, 102, 112 140, 150, 151 190, 260, 264	044, 402, 452
0622.xxx	Dustproof Strike	0.6	$71	$77

FEATURES: Dustproof strike is ideal for concrete installations. Large size plate and the spread of screw holes have better holding power in concrete slabs. This dustproof strike can be used for installation in metal thresholds by removing the face plate. To install, drill 1″ (25mm) diameter hole and tighten lock nut. To lock the strike for pedestrian traffic, insert a coin in slot and turn clockwise. To convert for flush bolt use, turn counterclockwise.

PACKED: Solid brass locking type dustproof strike with face plate, machine screws and expansion shields.

NOTE: For use with 0600 Flush Bolt only.

KICK PLATES | PUSH PLATES

2000.xxx.0630 Kick Plate

Item #	Description	Wt.	003, 102 112, 190	044, 055, 056
2000.xxx.0630	6″ x 30″, .05″ thick brass		$212	$246

FEATURES: Protect bottom of doors from scuffing. Holes are spaced approximately 6″ on centers. Most plates supplied with Phillips head sheet metal screws to match. Plates are not beveled.

PACKED: Each plate is wrapped in strong kraft paper and supplied with matching fasteners.

PROTECTIVE COATING: All brass plates are coated with a highly durable baked-on enamel to protect the finish.

2000.xxx.0630

2000.xxx.0634, 2000.xxx.0830, 2000.xxx.0834 Kick Plates

Item #	Description	Wt.	003, 031, 050 060, 102, 112 150, 151, 190	044, 055, 056
2000.xxx.0634	6″ x 34″, .05″ thick brass		$222	$269
2000.xxx.0830	8″ x 30″, .05″ thick brass		$258	$305
2000.xxx.0834	8″ x 34″, .05″ thick brass		$258*	$305

*Also available in 264

FEATURES: Protect bottom of doors from scuffing. Holes are spaced approximately 6″ on centers. Most plates supplied with Phillips head sheet metal screws to match. Plates are not beveled.

PACKED: Each plate is wrapped in strong kraft paper and supplied with matching fasteners.

PROTECTIVE COATING: All brass plates are coated with a highly durable baked-on enamel to protect the finish.

2000.xxx.0634

2121 – 2124 Square Edge

2121, 2123, 2124

Item #	Description	Wt.	003, 031, 033, 050 060, 102, 112 140, 150, 151 190, 260, 264	044, 055, 056
2121.xxx	Square Edge Push Plate – 3″ x 12″	0.5	$40	$58
2123.xxx	Square Edge Push Plate – 3.5″ x 15″	0.9	$40	$58
2124.xxx	Square Edge Push Plate – 4″ x 16″	1	$44	$58

FEATURES: Mix any door pulls and push plates shown to create your own look. Pulls are always centered on plates.

PACKED: Each plate is individually wrapped and furnished with oval head–undercut, stainless steel, sheet metal screws plated to match.

BHMA DESIGNATION: J301

2280, 2281 Nashville

2280, 2281

Item #	Description	Wt.	003, 031, 033, 050 060, 102, 112 140, 150, 151 190, 260, 264	044, 055, 056
2280.xxx	Nashville Push Plate – 3.5″ x 15″	1.9	$120	$156
2281.xxx	Nashville Push Plate – 3.5″ x 20″	2.6	$137	$179

FEATURES: Mix any door pulls and push plates shown to create your own look. Pulls are always centered on plates.

PACKED: Each plate is individually wrapped and furnished with full thread wood screws.

PUSH PLATES | PULL PLATES

2282 San Francisco

2282

Item #	Description	Wt.	003, 031, 033, 050 060, 102, 112 140, 150, 151 190, 260, 264	044
2282.xxx	San Francisco Push Plate – 2.25″ x 11.875″	1.3	$151	$156

FEATURES: Mix any door pulls and push plates shown to create your own look. Pulls are always centered on plates.
PACKED: Each plate is individually wrapped and furnished with oval head–undercut, stainless steel, sheet metal screws plated to match.

2285 Bristol

2285

Item #	Description	Wt.	003, 031, 033, 050 060, 102, 112 140, 150, 151 190, 260, 264	044, 402, 452
2285.xxx	Bristol Push Plate – 2.75″ x 11″	1.4	$137	$179

FEATURES: Mix any door pulls and push plates shown to create your own look. Pulls are always centered on plates.
PACKED: Each plate is individually wrapped and furnished with oval head–undercut, stainless steel, sheet metal screws plated to match.

2331, 2335, 2337, 2355, 2357 Pull Plate

2331, 2335, 2337

2355, 2357

Item #	Description	Wt.	003, 031, 050 060, 102, 112 140, 150, 151 190, 260, 264	044, 402, 452
2331.xxx	2560 Pull x 2121 Pull Plate – 3″ x 12″	1.3	$175	$205
2335.xxx	2560 Pull x 2123 Pull Plate – 3.5″ x 15″	1.5	$175	$205
2337.xxx	2560 Pull x 2124 Pull Plate – 4″ x 16″	1.7	$175	$205
2355.xxx	2540 Pull x 2123 Pull Plate – 3.5″ x 15″	1.6	$184	$205
2357.xxx	2540 Pull x 2124 Pull Plate – 4″ x 16″	1.6	$184	$205

FEATURES: Pulls are attached to plates with concealed fasteners for ease of installation.
PACKED: One complete pull plate in a box with fasteners for 1.75″ (44mm) thick door.
SPECIAL FASTENERS: Order 6501.000.D for door 1-7/8″ to 2-1/4″ thick. Consult price list.
BHMA EQUIVALENTS: Baldwin Product Nos.: 2330/2350 Series
BHMA DESIGNATION: J405

Pull – Invisible Mounting Methods

Back-To-Back Applications without Push Plates only

MTG1

MTG2

MTG3

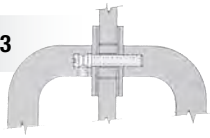

MTG5

MTG8

Item #	Description	Additional Charge
xxxx.xxx.MTG1	Wood Door w/ thru Bolt, Back-to-Back Set	$23
xxxx.xxx.MTG2	Hollow Metal Door, Back-to-Back Set	$23
xxxx.xxx.MTG3	Glass Door Prep w/ rosettes, Back-to-Back Set	$89
xxxx.xxx.MTG5	Wood Door, no thru Bolt, Per Pull	$15
xxxx.xxx.MTG8	Glass Door Prep w/ rosettes, Per Pull	$46

NOTE: MTG1 - Minimum Pull Thickness: .5″ (13mm)
MTG2 - Minimum Pull Thickness: .5″ (13mm), Door must be reinforced at application points.
MTG3 - Minimum Pull Thickness: .5″ (13mm), Minimum Glass Thickness: 3/8″, Hole Size: 7/8″
MTG5 - Minimum Pull Thickness: .5″ (13mm)
MTG8 - Minimum Pull Thickness: None, Complete with screw cover

ORDERING INSTRUCTIONS: ALWAYS specify door thickness when ordering invisible mounting applications. Refer to examples when ordering pulls:
2704.xxx.MTG1 - will include two 2704 pulls and mounting hardware for specifications shown.
2704.xxx.MTG5 - will include one 2704 pull and mounting hardware for specifications shown.
NOTE: Set screw location will vary by style selected.

DOOR PULLS

2556, 2557 New York/Princeton/Richland & Atlanta

2556, 2557

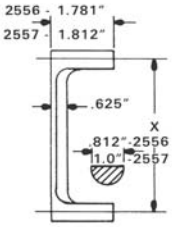

Item #	Description	003, 031, 033, 050 060, 102, 112 140, 150, 151 190, 260, 264	044, 402, 452
2556.xxx	New York/Princeton/Richland – 5.75″ CTC	$112	$141
2557.xxx	Atlanta – 7″ CTC	$112	$141

FEATURES: Mix any door pulls and push plates shown to create your own look. Contemporary and traditional screw covers are available to conceal heads of thru bolts.

PACKED: One pull in a box with thru bolts for 1.75″ thick doors.

NOTE: For door thickness 1.825-2.25″ use 6501.000.D conversion kit.

HANDICAP: Pulls designated have 1.5″ minimum inside projection to meet ADA, ANSI & handicap code conditions.

2560 Utility

Not available for back-to-back mounting

2560

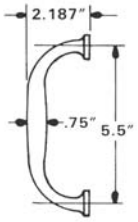

Item #	Description	003, 031, 033, 050 060, 102, 112 140, 150, 151 190, 260, 264	044, 402, 452
2560.xxx*	Utility – 5.5″ CTC	$112	$141

*Not available back-to-back mounting

FEATURES: Mix any door pulls and push plates shown to create your own look. Contemporary and traditional screw covers are available to conceal heads of thru bolts.

PACKED: One pull in a box with thru bolts for 1.75″ thick doors.

NOTE: For door thickness 1.825-2.25″ use 6501.000.D conversion kit.

HANDICAP: Pulls designated have 1.5″ minimum inside projection to meet ADA, ANSI & handicap code conditions.

2564 Tremont

2564

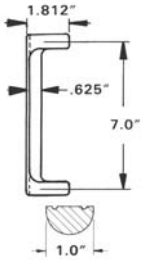

Item #	Description	003, 031, 033, 050 060, 102, 112 140, 150, 151 190, 260, 264	044, 402, 452
2564.xxx	Tremont – 7″ CTC	$112	$141

FEATURES: Mix any door pulls and push plates shown to create your own look. Contemporary and traditional screw covers are available to conceal heads of thru bolts.

PACKED: One pull in a box with thru bolts for 1.75″ thick doors.

NOTE: For door thickness 1.825-2.25″ use 6501.000.D conversion kit.

HANDICAP: Pulls designated have 1.5″ minimum inside projection to meet ADA, ANSI & handicap code conditions.

2574 – 2576, 2578 Richmond

2574, 2575

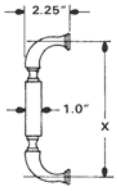

2576, 2578

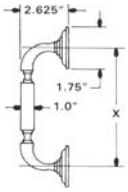

Item #	Description	003, 031, 033, 050 060, 102, 112 140, 150, 151 190, 260, 264	044, 402, 452
2574.xxx	Richmond – 8″ CTC	$170	$196
2575.xxx	XL Richmond – 10″ CTC	$170	$196
2576.xxx	Richmond w/roses – 8″ CTC	$170	$196
2578.xxx	XL Richmond w/roses – 10″ CTC	$170	$196

FEATURES: Mix any door pulls and push plates shown to create your own look. Contemporary and traditional screw covers are available to conceal heads of thru bolts.

PACKED: One pull in a box with thru bolts for 1.75″ thick doors.

NOTE: For door thickness 1.825-2.25″ use 6501.000.D conversion kit.

HANDICAP: Pulls designated have 1.5″ minimum inside projection to meet ADA, ANSI & handicap code conditions.

2584 Hamilton

2584

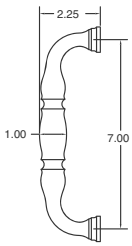

Item #	Description	003, 031, 033, 050 060, 102, 112 140, 150, 151 190, 260, 264	044, 402, 452
2584.xxx	Hamilton – 7″ CTC	$170	$196

FEATURES: Mix any door pulls and push plates shown to create your own look. Contemporary and traditional screw covers are available to conceal heads of thru bolts.

PACKED: One pull in a box with thru bolts for 1.75″ thick doors.

NOTE: For door thickness 1.825-2.25″ use 6501.000.D conversion kit.

HANDICAP: Pulls designated have 1.5″ minimum inside projection to meet ADA, ANSI & handicap code conditions.

2585 Concord
Not available for back-to-back mounting

2585

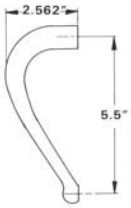

Item #	Description	003, 031, 033, 050 060, 102, 112 140, 150, 151 190, 260, 264	044, 402, 452
2585.xxx*	Concord – 5.5″ CTC	$170	$196

*Not available back-to-back mounting

FEATURES: Mix any door pulls and push plates shown to create your own look. Contemporary and traditional screw covers are available to conceal heads of thru bolts.

PACKED: One pull in a box with thru bolts for 1.75″ thick doors.

NOTE: For door thickness 1.825-2.25″ use 6501.000.D conversion kit.

HANDICAP: Pulls designated have 1.5″ minimum inside projection to meet ADA, ANSI & handicap code conditions.

2597 Edinburgh

2597

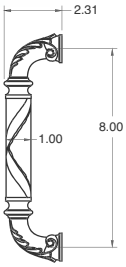

Item #	Description	003, 031, 033, 050 060, 102, 112 140, 150, 151 190, 260, 264	044, 402, 452
2597.xxx	Edinburgh – 8″ CTC	$170	$196

FEATURES: Mix any door pulls and push plates shown to create your own look. Contemporary and traditional screw covers are available to conceal heads of thru bolts.

PACKED: One pull in a box with thru bolts for 1.75″ thick doors.

NOTE: For door thickness 1.825-2.25″ use 6501.000.D conversion kit.

HANDICAP: Pulls designated have 1.5″ minimum inside projection to meet ADA, ANSI & handicap code conditions.

2598 Bristol

2598

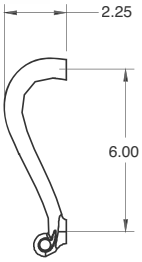

Item #	Description	003, 031, 033, 050 060, 102, 112 140, 150, 151 190, 260, 264	044, 402, 452
2598.xxx	Bristol – 6″ CTC	$170	$196

FEATURES: Mix any door pulls and push plates shown to create your own look. Contemporary and traditional screw covers are available to conceal heads of thru bolts.

PACKED: One pull in a box with thru bolts for 1.75″ thick doors.

NOTE: For door thickness 1.825-2.25″ use 6501.000.D conversion kit. Not available in back to back mounting.

HANDICAP: Pulls designated have 1.5″ minimum inside projection to meet ADA, ANSI & handicap code conditions.

2602 Lexington
w/plates
Not available for back-to-back mounting

2602

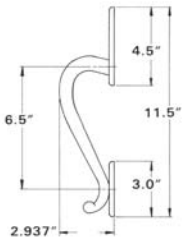

Item #	Description	003, 031, 033, 050 060, 102, 112 140, 150, 151 190, 260, 264	044, 402, 452
2602.xxx*	Lexington w/plates – 6.5″ CTC	$112	$141

Not Available back-to-back mounting.

FEATURES: Mix any door pulls and push plates shown to create your own look. Contemporary and traditional screw covers are available to conceal heads of thru bolts.

PACKED: One pull in a box with thru bolts for 1.75″ thick doors.

NOTE: For door thickness 1.825-2.25″ use 6501.000.D conversion kit.

HANDICAP: Pulls designated have 1.5″ minimum inside projection to meet ADA, ANSI & handicap code conditions.

2604 Renssalear

2604

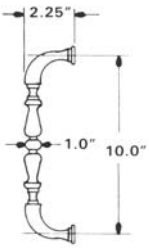

Item #	Description	003, 031, 033, 050 060, 102, 112 140, 150, 151 190, 260, 264	044, 402, 452
2604.xxx	Renssalear – 10″ CtC	$170	$196

FEATURES: Mix any door pulls and push plates shown to create your own look. Contemporary and traditional screw covers are available to conceal heads of thru bolts.

PACKED: One pull in a box with thru bolts for 1.75″ thick doors.

NOTE: For door thickness 1.825-2.25″ use 6501.000.D conversion kit.

HANDICAP: Pulls designated have 1.5″ minimum inside projection to meet ADA, ANSI & handicap code conditions.

DOOR PULLS | PULLS

2617 Springfield
Not available for back-to-back mounting

2617

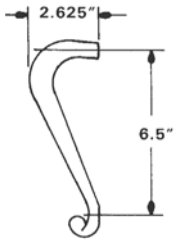

Item #	Description	003, 031, 033, 050 060, 102, 112 140, 150, 151 190, 260, 264	044, 402, 452
2617.xxx*	Springfield – 6.5″	$112	$141

*Not available back-to-back mounting

FEATURES: Mix any door pulls and push plates shown to create your own look. Contemporary and traditional screw covers are available to conceal heads of thru bolts.

PACKED: One pull in a box with thru bolts for 1.75″ thick doors.

NOTE: For door thickness 1.825-2.25″ use 6501.000.D conversion kit.

HANDICAP: Pulls designated have 1.5″ minimum inside projection to meet ADA, ANSI & handicap code conditions.

2673 Lancaster/Charleston/Plymouth

2673

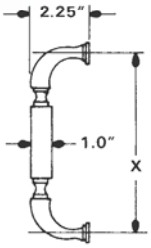

Item #	Description	003, 031, 033, 050 060, 102, 112 140, 150, 151 190, 260, 264	044, 402, 452
2673.xxx	Lancaster/Charleston/Plymouth – 6″ CtC	$170	$196

FEATURES: Mix any door pulls and push plates shown to create your own look. Contemporary and traditional screw covers are available to conceal heads of thru bolts.

PACKED: One pull in a box with thru bolts for 1.75″ thick doors.

NOTE: For door thickness 1.825-2.25″ use 6501.000.D conversion kit.

HANDICAP: Pulls designated have 1.5″ minimum inside projection to meet ADA, ANSI & handicap code conditions.

2674 Pasadena

2674

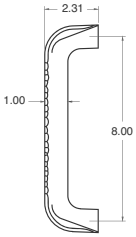

Item #	Description	003, 031, 033, 050 060, 102, 112 140, 150, 151 190, 260, 264	044, 402, 452
2674.xxx	Pasadena – 8″ CtC	$170	$196

FEATURES: Mix any door pulls and push plates shown to create your own look. Contemporary and traditional screw covers are available to conceal heads of thru bolts.

PACKED: One pull in a box with thru bolts for 1.75″ thick doors.

NOTE: For door thickness 1.825-2.25″ use 6501.000.D conversion kit.

HANDICAP: Pulls designated have 1.5″ minimum inside projection to meet ADA, ANSI & handicap code conditions.

2693 Kensington/Victoria
Not available for back-to-back mounting

2693

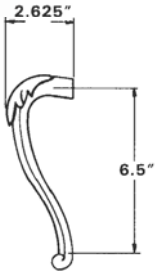

Item #	Description	003, 031, 033, 050 060, 102, 112 140, 150, 151 190, 260, 264	044, 402, 452
2693.xxx*	Kensington/Victoria – 6.5″ CtC	$170	$196

*Not available back-to-back mounting

FEATURES: Mix any door pulls and push plates shown to create your own look. Contemporary and traditional screw covers are available to conceal heads of thru bolts.

PACKED: One pull in a box with thru bolts for 1.75″ thick doors.

NOTE: For door thickness 1.825-2.25″ use 6501.000.D conversion kit.

HANDICAP: Pulls designated have 1.5″ minimum inside projection to meet ADA, ANSI & handicap code conditions.

4000, 4005, 4010 Half Dome Door Bumper

4000

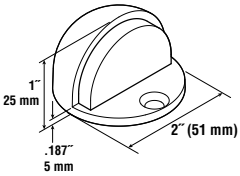

4005

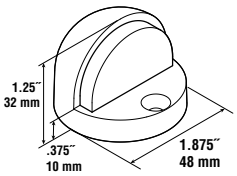

4010

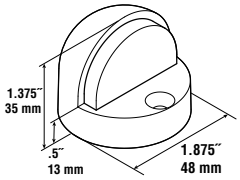

Item #	Description	Per Box	Wt.	030, 031, 033, 050 060, 102, 112 140, 150, 151 190, 260, 264	044 402 452
4000.xxx	Half Dome Door Bumper – 1″ Ht.	50	12	$17	$21
4005.xxx	Half Dome Door Bumper – 1.25″ Ht.	40	16.6	$17	$21
4010.xxx	Half Dome Door Bumper – 1.375″ Ht.	40	19	$17	$21

FEATURES: "Half Dome" design minimizes stumbling hazards and cleaning interference. Thick solid rubber bumper of special design is compounded for greater resiliency.

PACKED: Individually poly-bagged with appropriate fasteners in a dispensing type carton.

FASTENERS: Supplied with fasteners for wood, plaster, and masonry installations.

FEDERAL SPECIFICATION EQUIVALENTS: Government Type: 1330/1330A

BHMA DESIGNATION: L02141 (No. 4000)
L02161 (No. 4005/No. 4010)

REPLACEMENT RUBBER: No. 4000.406 for 4000/4005/4010 (Grey)

4505 Universal Floor Bumper

4505

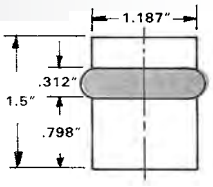

QUICK SHIP*
ships in 3 days

Item #	Description	Per Box	Wt.	003 031, 033, 050 060, 102, 112 140, 150, 151 190, 260, 264	055 056, 044 402, 452
4505.xxx	Floor Bumper – 1.187″ Dia.	10	4	$29	$34

FEATURES: Designed for concealed mounting applications, this contemporary floor bumper contains the mounting screw within the body of the bumper. The rubber insert is located .798″ (20mm) from the bottom to function on doors with a .375″ (9.5mm) to a 1″ (25mm) undercut. To facilitate the replacement of the rubber guard, simply remove the top cap.

PACKED: Individually poly-bagged with appropriate fasteners.

ORDERING INSTRUCTIONS: Supplied with a wood screw and plastic anchor.aa

REPLACEMENT RUBBER: No. 4507.406.00035 (Grey)

4510 Floor Bumper

4510

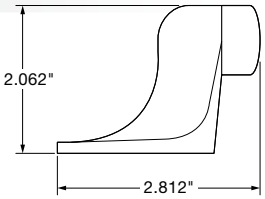

Item #	Description	Per Box	Wt.	003 031, 033, 050 060, 102, 112 140, 150, 151 190, 260, 264	044 402 452
4510.xxx	Floor Bumper	1	0.6	$35	$41

FEATURES: Forged construction floor bumper is designed for use on doors with or without thresholds. Modern and streamlined shape reduces obtrusive appearance. High projection obviates the use of inventorying different heights of floor bumpers.

PACKED: Supplied with wood and masonry fasteners.

BHMA Designation: L02181

REPLACEMENT RUBBER: No. 5202.099.00009 (Grey)

DOOR & WALL MOUNTED

4100, 4101, 4105, 4507 Lever Type Door Holder

4100, 4105

4101

Item #	Description	Wt.	003 031, 033, 050 060, 102, 112 140, 150, 151 190, 260, 264	044 402 452
4100.xxx	Lever Door Holder – 4″ L.-Max floor clearance: 3″	4.4	$32	$37
4101.406*	Replacement tip for 4100		$7	--
4105.xxx	Lever Door Holder – 5″ L.-Max floor clearance: 4″	5	$34	$40

*Finish 406 only

FEATURES: Forged Brass construction incorporating a stainless steel hinging pin for added strength. This holder can be operated by foot. Highest quality non-marring rubber tip grips floor and holds the door at any desired opening. A spring catch holds the lever in an upright, disengaged position when holder is not in use. Specially designed rubber shoe will not loosen in service but can easily be replaced.

PACKED: Individually poly-bagged with appropriate fasteners in a dispensing type carton.

FASTENERS: Furnished standard with sheet metal screws.

Federal Specification Equivalents: Government Type: 1149A/1149B

BHMA DESIGNATION: L01391 (4100)
L01381 (4105)

4041, 4045, 4050, 4055, 4057 Base Mounted Door Bumpers

QUICK SHIP

4045, 4050

4041.406

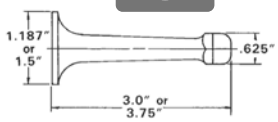

4055

4057.406

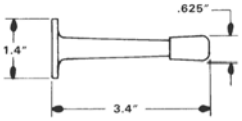

Item #	Description	Wt.	003, 031, 033, 050 060, 102, 112 140, 150, 151 190, 260, 264	044 055, 056 402, 452
4045.xxx	Wall Door Bumper – 3″ Proj., 1.1875″ Dia.	2	$18	$25
4041.406*	Replacement tip for 4045		$7	--
4050.xxx**	Wall Door Bumper – 3.75″ Proj., 1.5″ Dia.	3	$18	$25
4055.xxx	Wall Door Bumper – 3.4″ Proj., 1.1875″ Dia.	2	$18	$25
4057.406*	Replacement tip for 4055		$7	--

*Finish 406 only
**Not available in 056

FEATURES: Solid forged brass construction for maximum strength and durability. Stem of bumper has hexagon section to facilitate fastening without damaging finish. Resilient rubber guard is replaceable.
4055.xxx is designed for quick and efficient installation by power driven tools, using socket type wrench.

PACKED: Individually poly-bagged with appropriate fasteners (1 per poly bag).

FASTENERS: Supplied with wood screw thread.

Federal Specification Equivalents: Government Type: 1322

BHMA DESIGNATION: L02031

4015, 4252 Convex Wall Bumpers

4015

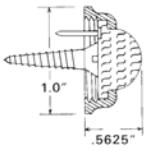

4252

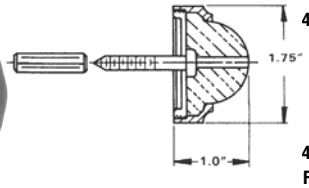

Item #	Description	Wt.	003, 031, 033, 050 060, 102, 112 140, 150, 151 190, 260, 264	044, 055 402, 452
4015.xxx**	Wall Flush Bumper – 1″ Dia.	0.8	$15	$20
4252.xxx*	Wall Flush Bumper – Convex Design	10	$15	$20

*Not available in 055
**Not available in 003

4015 FEATURES: Compact designed bumper permits installation in areas where larger bumpers are not suitable due to size or projection. Fasteners are totally concealed underneath durable rubber insert.

4252 FEATURES: Engineered for commercial/residential installations, this compact and contemporary designed bumper features completely concealed fasteners for an unobtrusive and screwless appearance. Supplied with wood and masonry fasteners, it is furnished unassembled to facilitate the substitution of fasteners. Designed for ease of installation, the bumper is attached onto a heavy gauge metal back plate through a threading application. For a fully theft proof installation, the use of a strap wrench for tightening or several drops of Loctite Grade A is recommended.

4252 PACKED: 50 in a box; individually poly-bagged with appropriate fasteners in a dispensing type carton.

FEDERAL SPECIFICATION EQUIVALENTS: Government Type: 1327 (4252 only)

BHMA DESIGNATION: L02101 (4015 & 4252)

4273, 4293 Concave Wall Bumpers

4273

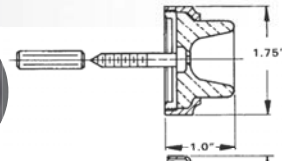

4293

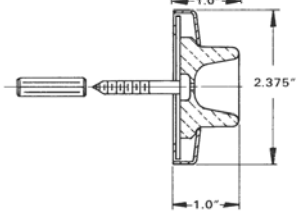

Item #	Description	Wt.	003, 031, 033, 050 060, 102, 112 140, 150, 151 190, 260, 264	044, 402, 452
4273.xxx	Wall Flush Bumper – Concave Design 1.75″ Dia.	9.6	$15	$20
4293.xxx***	Wall Flush Bumper – Concave Design 2.375″ Dia.	4.5	$15	$20

***Not available in 402,412 and 452

4273 FEATURES: Concave type rubber permits knob of button type lock to strike bumper without engaging lock mechanism. Special design protects lock mechanism from damage.

4293 FEATURES: Concave type rubber permits knob of button type lock to strike bumper without engaging lock mechanism. Special design protects lock mechanism from damage.

PACKED: Individually poly-bagged with wood and masonry fasteners in a dispensing type carton.

FEDERAL SPECIFICATION EQUIVALENTS: Government Type: 1327 (4293 only)

BHMA DESIGNATION: L22251 (4273 & 4293)

MORTISE HINGE SPECIFICATIONS

FEATURES: Extruded brass, full mortise hinges are machined for precise installation and smooth movement. Knuckles are milled to a clearance of 0.010″ (.25mm) to minimize vertical wear. Each hinge is beveled on the inside leaf to obtain a tight fit when viewing the hinge in a closed position, and furnished with stainless steel, rust-proof pins for added durability.

PIN DESIGN: Each pin is manufactured from precision ground Type 302, stainless steel material to prevent corrosion. The pin "floats" within the barrel of the hinge, yet is held in a stationary position. Pins can be removed by unthreading each finial and tapping the pin upward from the bottom of the barrel.

FINIAL DESIGN: Hinge finials are specially designed to thread into the top and bottom of the hinge barrel, preventing the pin from rising out of the hinge barrel. All tips are completely interchangeable to facilitate stocking and eliminate excessive inventories. Finials can be purchased separately in sets of four only. Hinges are furnished standard with button design finials.

FASTENERS: All full mortise hinges are supplied standard with appropriate size wood screws as noted on chart. Wood screws are fully threaded to the head and have an undercut head for secure installations.

BEVELED EDGE: Each Baldwin hinge is beveled on the inside leaf to obtain a tight fit when the hinge is in a closed position.

EXTRUSION: Hinges manufactured from solid brass extrusions have two inherent properties: exceptional strength and precision tolerances. Baldwin's extruded hinges are machined from a solid brass bar to exact tolerances to ensure an even wear between each knuckle. The result is a QUALITY hinge which can withstand above average door weights and stresses with maximum vertical and lateral wear performance.

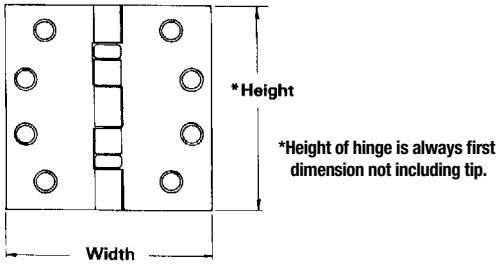

TEMPLATE: All full mortise hinges illustrated within this section are designed in accordance with the most current specifications established by the American National Standards Institute (ANSI).

APPLICATION: Baldwin full mortise hinges are classified as STANDARD WEIGHT for installation on doors up to 1.75″ (44mm) in thickness.

NUMBER OF HINGES: Use three hinges on doors up to and including 7.5 feet (2.3m) and one additional hinge for each additional 2.5 feet (.76m) or fraction thereof.

NON-REMOVABLE PINS (NRP): Hinges can be obtained with non-removable pins to prevent removal of hinge pins when the door is in a closed position. This special application is used when the hinge barrel is exposed to the exterior side of a building (Reverse Bevel Door Conditions). A stainless steel set screw is inserted into the barrel from the inside of the hinge (Emblem Mark Side), which intercepts a groove milled on the pin. (Not available on Hinge No. 1030). Furnished at an additional charge. Specify as follows: 1 pr 1040.030 NRP Hinge - 4″ x 4″ = 1040.030.NRP

METAL DOOR APPLICATION: Machine screw packets are available to accommodate mortise hinge installation for metal doors.

- >All hinges have a slight offset leaf which provides clearance of .077″ (2mm) when leaves are closed and parallel.
- >All hinges have template screw hole locations for use on either wood or hollow metal doors and frames.
- >Pins are manufactured from precision ground, stainless steel material.
- >All finials are threaded into the barrel of the hinge to prevent pin from rising.
- >Finials are completely interchangeable with all full mortise hinge sizes.
- >Furnished standard with solid brass Phillips head wood screws, undercut, fully threaded to the head.
- >Inner leaf is beveled to ensure the tightest possible fit and enhance hinge appearance.
- >Available with a Non-Removable Pin (NRP) feature (except No. 1030).

***QUICK SHIP** is available in **limited functions and finishes.**
For complete listing, please refer to page 272.

REPLACEMENT SCREWS & HINGE PINS

HInge Construction

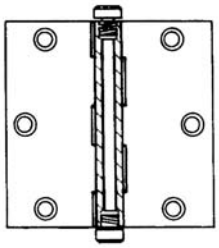

Square

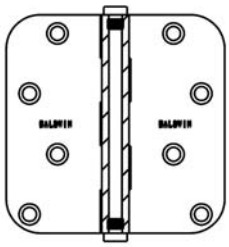

Rounded

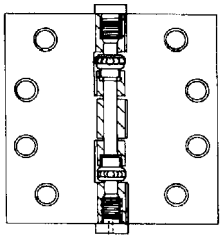

Ball Bearing

Replacement Screws
Square & Ball Bearing Hinges on METAL DOORS

Item #	Function	020, 027, 022*	003
1052.xxx.MS	METAL DOOR: 12 - 24 x ½″ Flat Head, Phillips screws for use with 1040, 1041, 1045, 1046 & 1051 hinges	$4	$16
1063.xxx.MS	METAL DOOR: 10 - 24 x ½″ Flat Head, Phillips screws for use with 1030 & 1035 hinges	$4	$16

*Finishes for Machine Screws: 020=030, 022=140, 027=102

Replacement Screws
Square & Ball Bearing Hinges on WOOD DOORS

Item #	Function	003, 050, 102, 112, 140, 151, 221
1419.xxx.05105	WOOD DOOR: 3 – #10 Flat Head, Phillips screws for use with 1030 & 1035 hinges	2 NET
1480.xxx.05105	WOOD DOOR: 4 – #12 Flat Head, Phillips screws for use with 1040 & 1041, 1045 1046 & 1051 hinges	2 NET

Hinge Pins
Square, Rounded & Ball Bearing Hinges ONLY

Item #	Description	Standard Box	Price
1030.000.PIN	Hinge pins for 1030 hinges	3	$4
1035.000.PIN	Hinge pins for 1035 hinges	3	$4
1040.000.PIN	Hinge pins for 1040 and 1041 hinges	3	$4
1045.000.PIN	Hinge pins for 1045 and 1046 hinges	3	$4
1051.000.PIN	Hinge pins for 1051 hinges	3	$4

***QUICK SHIP** is available in **limited functions and finishes.**
For complete listing, please refer to page 272.

1030 3″ x 3″ – Square Corner

1030

Item #	Description	Per Box	Wt.	003, 031, 033, 050 060, 102, 112 140, 150, 151 190, 260, 264	044, 055, 056 402, 452
1030.xxx.I	Hinge – 3″ x 3″	1 each	0.5	$39	$50

PACKED: One per box, each hinge poly-bagged with fasteners.
Supplied with 6 – #10 Flat Head-Phillips wood screws.

1035 3.5″ x 3.5″ – Square Corner

1035

QUICK SHIP

Item #	Description	Per Box	Wt.	003, 031, 033, 050 060, 102, 112 140, 150, 151 190, 260, 264	044, 055, 056 402, 452
1035.xxx.I	Hinge – 3.5″ x 3.5″	1 each	0.7	$42	$54
1035.xxx.INRP	Hinge – 3.5″ x 3.5″	1 each	0.7	$50	$61

PACKED: One per box, each hinge poly-bagged with fasteners.
Supplied with 6 – #10 Flat Head-Phillips wood screws.

1040 4″ x 4″ – Square Corner

1040

QUICK SHIP

Item #	Description	Per Box	Wt.	003, 031, 033, 050 060, 102, 112 140, 150, 151 190, 260, 264	044, 055, 056 402, 452
1040.xxx.I	Hinge – 4″ x 4″	1 each	0.8	$46	$57
1040.xxx.INRP	Hinge – 4″ x 4″	1 each	0.8	$54	$64

PACKED: One per box, each hinge poly-bagged with fasteners.
Supplied with 8 – #12 Flat Head-Phillips wood screws.

1045 4.5″ x 4.5″ – Square Corner

1045

QUICK SHIP

Item #	Description	Per Box	Wt.	003, 031, 033, 050 060, 102, 112 140, 150, 151 190, 260, 264	044, 055, 056 402, 452
1045.xxx.I	Hinge – 4.5″ x 4.5″	1 each	1.0	$49	$60
1045.xxx.INRP	Hinge – 4.5″ x 4.5″	1 each	1.0	$57	$68

PACKED: One per box, each hinge poly-bagged with fasteners.
Supplied with 8 – #12 Flat Head-Phillips wood screws.

1035, 1090 – 1093 Hinge Finials for Square Corner

1035 1090 1091 1092 1093

Item #	Description	Per Box	Wt.	003, 031, 033, 050, 060 102, 112,140 150, 151,152 190, 260, 264	044 055 056
1035.xxx.ITIP	Button tip	2each		$13	$16
1090.xxx.I*	Ball tip	2 each		$16	$18
1091.xxx.I*	Urn tip	2 each		$16	$18
1092.xxx.I*	Acorn tip	2 each		$16	$18
1093.xxx.I*	Steeple tip	2 each		$16	$18

* To match 402 on hinge, order finial in 102 finish. To match 412 on hinge, order finial in 112 finish. To match 452 finish on hinges, order finials in finish 152.

FEATURES: Hinge finials are specially-designed to thread into the top and bottom of the hinge barrel. All finials are completely interchangeable to facilitate stocking and eliminate excessive inventories. Finials can be purchased separately in sets of 2 only.

RADIUS CORNER

1135 3.5″ x 3.5″ – ⅝″ Radius Corner

1135

Item #	Description	Per Box	Wt.	003, 031, 033, 050 060, 102, 112 140, 150, 151 190, 260, 264	044, 055, 056 402, 452
1135.xxx.I	⅝″ Radius Corner Hinge – 3.5″ x 3.5″	1 each	0.7	$29	$40

PACKED: One per box, each hinge poly-bagged with fasteners. Supplied with #10 x 1″ Flat Head-Phillips wood screws.
NOTE: NON-REMOVABLE PINS (NRP) NOT AVAILABLE on radius corner hinges.

1140 4″ x 4″ – ⅝″ Radius Corner

1140

Item #	Description	Per Box	Wt.	003, 031, 033, 050 060, 102, 112 140, 150, 151 190, 260, 264	044, 055, 056 402, 452
1140.xxx.I	⅝″ Radius Corner Hinge – 4″ x 4″	1 each	0.8	$32	$43

PACKED: One per box, each hinge poly-bagged with fasteners. Supplied with #10 x 1″ Flat Head-Phillips wood screws.
NOTE: NON-REMOVABLE PINS (NRP) NOT AVAILABLE on radius corner hinges.

1435 3.5″ x 3.5″ – ¼″ Radius Corner

1435

Item #	Description	Per Box	Wt.	003, 031, 033, 050 060, 102, 112 140, 150, 151 190, 260, 264	044, 055, 056 402, 452
1435.xxx.I	¼″ Radius Corner Hinge – 3.5″ x 3.5″	1 each	0.7	$29	$40

PACKED: One per box, each hinge poly-bagged with fasteners. Supplied with #10 x 1″ Flat Head-Phillips wood screws.
NOTE: NON-REMOVABLE PINS (NRP) NOT AVAILABLE on radius corner hinges.

1440 4″ x 4″ – ¼″ Radius Corner

1440

Item #	Description	Per Box	Wt.	003, 031, 033, 050 060, 102, 112 140, 150, 151 190, 260, 264	044, 055, 056 402, 452
1440.xxx.I	¼″ Radius Corner Hinge – 4″ x 4″	1 each	0.8	$32	$43

PACKED: One per box, each hinge poly-bagged with fasteners. Supplied with #10 x 1″ Flat Head-Phillips wood screws.
NOTE: NON-REMOVABLE PINS (NRP) NOT AVAILABLE on radius corner hinges.

1080, 1081, 1083 Hinge Finials for Radius Corner

1080

1081

1083

Item #	Description	Wt.	003, 031 033, 050, 060 102, 112,140 150, 151, 152 190, 260, 264	044 055 056
1080.xxx.I*	Ball tip – Radius Corner Hinge		$10	$12
1081.xxx.I*	Button tip – Radius Corner Hinge		$10	$12
1083.xxx.I*	Steeple tip – Radius Corner Hinge		$10	$12
8490.xxx.RCS	Radius Corner Screws (Set of 4)		$6	$6

* To match 402 on hinge, order finial in 102 finish.
To match 452 finish on hinges, order finials in finish 152.

FEATURES: Hinge finials are specially-designed to thread into the top and bottom of the hinge barrel. All finials are completely interchangeable to facilitate stocking and eliminate excessive inventories. Finials can be purchased separately in sets of 2 only.

BALL BEARING HINGE SPECIFICATIONS

Each hinge is designed with two anti-friction ball bearing assemblies which are non-detachable. The balls inside each chamber are constructed from through-hardened, chrome alloy steel material to ensure a longer hinge life. The bearing races are machined from alloy steel which is then hardened and electroplated with a rust-resisting zinc-chromate finish. Our testing indicates that although this electroplate finish provides rust protection, when exposed to weather elements of exterior, the steel will eventually rust. The location of each assembly increases the vertical load capacity and greatly reduces both vertical and lateral wear of the hinge. As a result, all factors which normally contribute to hinge failure are significantly reduced. BALL BEARING HINGES ARE RECOMMENDED FOR DOORS EQUIPPED WITH DOOR CLOSERS AND/OR RECEIVING AVERAGE FREQUENCY SERVICE.

APPLICATION: STANDARD WEIGHT BALL BEARING hinges are designed for medium weight doors receiving average traffic in residential and light commercial construction. Ball bearing hinges are ALWAYS recommended for doors equipped with door closers.

1041 4″ x 4″ – Ball Bearing

1041

Item #	Description	Per Box	Wt.	003, 031, 033, 050 060, 102, 112 140, 150, 151 190, 260, 264	044, 055, 056 402, 452
1041.xxx.I	Ball Bearing Hinge – 4″ x 4″	1 each	0.8	$56	$67
1041.xxx.INRP	Ball Bearing Hinge – 4″ x 4″	1 each	0.9	$60	$71

PACKED: One per box, each hinge poly-bagged with fasteners.
Supplied with #12 x 1.25″ Flat Head-Phillips wood screws.

1046 4.5″ x 4.5″ – Ball Bearing

1046

Item #	Description	Per Box	Wt.	003, 031, 033, 050 060, 102, 112 140, 150, 151 190, 260, 264	044, 055, 056 402, 452
1046.xxx.I	Ball Bearing Hinge – 4.5″ x 4.5″	1 each	1.0	$59	$70
1046.xxx.INRP	Ball Bearing Hinge – 4.5″ x 4.5″	1 each	1.0	$63	$75

PACKED: One per box, each hinge poly-bagged with fasteners.
Supplied with #12 x 1.25″ Flat Head-Phillips wood screws.

1051 5″ x 5″ – Ball Bearing

1051

Item #	Description	Per Box	Wt.	003, 031, 033, 050 060, 102, 112 140, 150, 151 190, 260, 264	044, 055, 056 402, 452
1051.xxx.I	Ball Bearing Hinge – 5″ x 5″	1 each	1.3	$85	$102
1051.xxx.INRP	Ball Bearing Hinge – 5″ x 5″	1 each	1.3	$91	$109

PACKED: One per box, each hinge poly-bagged with fasteners.
Supplied with #12 x 1.25″ Flat Head-Phillips wood screws.

1035, 1090 – 1093 Hinge Finials for Ball Bearing

1035 1090 1091 1092 1093

Item #	Description	Per Box	Wt.	003, 031 033, 050, 060 102, 112,140 150, 151, 152 190, 260, 264	044 055 056
1035.xxx.ITIP	Button tip	2 each		$13	$16
1090.xxx.I*	Ball tip	2 each		$16	$18
1091.xxx.I*	Urn tip	2 each		$16	$18
1092.xxx.I*	Acorn tip	2 each		$16	$18
1093.xxx.I*	Steeple tip	2 each		$16	$18

* To match 402 on hinge, order finial in 102 finish.
To match 452 finish on hinges, order finials in finish 152.

FEATURES: Hinge finials are specially-designed to thread into the top and bottom of the hinge barrel. All finials are completely interchangeable to facilitate stocking and eliminate excessive inventories. Finials can be purchased separately in sets of 2 only.

***QUICK SHIP** is available in **limited functions and finishes.**
For complete listing, please refer to page 272.

BEVELED EDGE

4740 – 4742, 4754 GFCI Plates
Beveled Edge

4740

4741

4754

4742

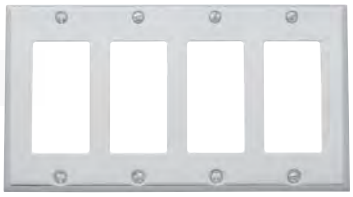

Item #	Description	Per Box	Wt.	030, 050, 112 150, 151, 260
4740.xxx.CD*	Triple GFCI – 4.5″ x 6.5″	5	2	$20
4741.xxx.CD	Double GFCI – 4.5″ x 4.5″	5	2.8	$15
4742.xxx.CD	Quad GFCI – 4.5″ x 8.125″	1	0.4	$27
4754.xxx.CD	Single GFCI – 4.5″ x 2.75″	5	1.7	$11

*Not Available in 260.

4742, 4750, 4764 Combos & Covers
Beveled Edge

4743

4750

4764

Item #	Description	Per Box	Wt.	030, 050, 112 150, 151, 260
4743.xxx.CD	GFCI/Single toggle combo – 4.5″ x 4.5″	5	1.4	$15
4750.xxx.CD*	Single box cover – 4.75″ x 2.75″	10	1.7	$11
4764.xxx.CD	Cable cover – 4.5″ x 2.75″	5	0.9	$11

*Not Available in 050, 151 or 260.

4752, 4771 Duplex
Beveled Edge

4752

4771

Item #	Description	Per Box	Wt.	030, 050, 112 150, 151, 260
4752.xxx.CD	Duplex – 4.5″ x 2.75″	5	1.7	$11
4771.xxx.CD	Double duplex – 4.5″ x 4.5″	5	1.1	$15

BEVELED EDGE | COLONIAL

4751, 4761, 4770, 4772, 4775 Toggles
Beveled Edge

Item #	Description	Per Box	Wt.	030, 050, 112 150, 151, 260
4751.xxx.CD	Single toggle – 4.5″ x 2.75″	5	1.7	$11
4761.xxx.CD	Double toggle – 4.5″ x 4.5″	5	2.8	$15
4770.xxx.CD	Triple toggle – 4.5″ x 6.5″	5	2	$20
4772.xxx.CD	Quad toggle – 4.5″ x 8.125″	5	2.6	$27
4775.xxx.CD**	Five gang toggle – 4.5″ x 10″	1	0.6	$40

**Not Available in 050, 112, 151 or 260.

4751

4761

4770

4772

4775

4757, 4781 Duplex
Colonial

Item #	Description	Per Box	Wt.	030, 050, 112 150, 151, 260
4757.xxx.CD	Duplex – 5.125″ x 3″	10	2.9	$15
4781.xxx.CD	Double duplex – 5.125″ x 5.125″	5	2.1	$23

4757

4781

4769 Cable Cover
Colonial

Item #	Description	Per Box	Wt.	030, 050, 112 150, 151, 260
4769.xxx.CD	Cable cover – 5.125″ x 3″	5	0.7	$15

4769

4756, 4766, 4780, 4782 Toggles
Colonial

Item #	Description	Per Box	Wt.	030, 050, 112 150, 151, 260
4756.xxx.CD	Single toggle – 5.125″ x 3″	10	2.9	$15
4766.xxx.CD	Double toggle – 5.125″ x 5.125″	5	4.7	$23
4780.xxx.CD	Triple toggle – 5.375″ x 6.5″	5	3.3	$30
4782.xxx.CD*	Quad toggle – 5.378″ x 8.25″	5	4.3	$40

*Not Available in 260.

4756

4766

4780

4782

CRYSTAL | SWAROVSKI® | BRASS

4301, 4302 Crystal Knob

4301, 4302

QUICK SHIP

Item #	Description	Wt./ Box	030, 112 150, 260
4301.xxx	Crystal Knob – 1.19″ d. x 1.6″ p.	1.1	$21
4302.xxx	Crystal Knob – 1.38″ d. x 1.8″ p.	1.7	$22

PACKED: In individual poly bags and protective cartons with .75″ long truss head screws. All bags are coded with product number, description & UPC code.

4318, 4319 Crystal Knob

4318, 4319

QUICK SHIP

Item #	Description	Wt./ Box	030, 112 150, 260
4318.xxx	Crystal Knob – 1.19″ d. x 1.6″ p.	1.5	$30
4319.xxx	Crystal Knob – 1.56″ d. x 2.0″ p.	2.4	$38

PACKED: In individual poly bags and protective cartons with .75″ long truss head screws. All bags are coded with product number, description & UPC code.

4324, 4325 Crystal Knob

4324, 4325

QUICK SHIP

Item #	Description	Wt.	030, 112 150, 260
4324.xxx	Crystal Knob – 1.38″ d. x 1.4″ p.	1.3	$37
4325.xxx	Crystal Knob – 1.75″ d. x 1.8″ p.	2.7	$47

PACKED: In individual poly bags and protective cartons with .75″ long truss head screws. All bags are coded with product number, description & UPC code.

4354 Crystal Cone Knob

4354

QUICK SHIP

Item #	Description	Wt./ Box	030, 112 150, 260
4354.xxx	Crystal Cone Knob – 1.19″ d. x 1.3″ p.	1.1	$21

PACKED: In individual poly bags and protective cartons with .75″ long truss head screws. All bags are coded with product number, description & UPC code.

4334, 4336 Swarovski Crystal Knob

4334, 4336

QUICK SHIP

Item #	Description	Wt./ Box	030, 112 150, 260
4334.xxx.S	Swarovski Crystal Knob – 1.19″ d. x 1.7″ p.	1.7	$70
4336.xxx.S	Swarovski Crystal Knob – 1.56″ d. x 2.1″ p.	3.1	$95

PACKED: In individual poly bags and protective cartons with .75″ long truss head screws. All bags are coded with product number, description & UPC code.

4446, 4447 Ring Deco Knob

4446, 4447

QUICK SHIP

Item #	Description	Wt./ Box	030, 050, 102, 112 140, 150, 260
4446.xxx.bin	Ring Deco Knob – 1.25″d. x 1.0″ p.	4.9	$16
4447.xxx.bin	Ring Deco Knob – 1.5″ d. x 1.1″ p.	7.5	$18

NOTE: All knobs use 8-32 x 1″ screws and mount on 3/4″ thick doors/cabinets.
PACKED: All bags are coded with product number, description and UPC code.

*QUICK SHIP is available in **limited functions and finishes.**
For complete listing, please refer to page 272.

CRYSTAL | SWAROVSKI® | BRASS

4453 Severin Fayerman Collection Knob

QUICK SHIP

4453

Item #	Description	Wt./ Box	030, 112 140, 150, 260
4453.xxx.bin	Couture Knob - 1.25″ x 1.13″ p.	3.2	$21

NOTE: All knobs use 8-32 x 1″ screws and mount on 3/4″ thick doors/cabinets.
PACKED: All bags are coded with product number, description and UPC code.

4455 Severin Fayerman Collection Knob

QUICK SHIP

4455

Item #	Description	Std Box	Wt./ Box	030, 112 140, 150, 260
4455.xxx.bin	Couture Knob - 1.06″ x .88″ p.	12	1.8	$21

NOTE: All knobs use 8-32 x 1″ screws and mount on 3/4″ thick doors/cabinets.
PACKED: All bags are coded with product number, description and UPC code.

4456 Severin Fayerman Collection Knob

QUICK SHIP

4456

Item #	Description	Wt./ Box	030, 112 140, 150, 260
4456.xxx.bin	Couture Knob - 1.32″ diameter x 1.24″ projection	4.6	$21

NOTE: All knobs use 8-32 x 1″ screws and mount on 3/4″ thick doors/cabinets.
PACKED: All bags are coded with product number, description and UPC code.

4458, 4459 Melon Knob

QUICK SHIP

4458, 4459

Item #	Description	Wt./ Box	030, 112 140, 150, 260
4458.xxx.bin	Melon Knob – 1.17″d. x 1.1″ p.	4.7	$16
4459.xxx.bin	Melon Knob – 1.36″d. x 1.3″ p.	5.8	$18

NOTE: All knobs use 8-32 x 1″ screws and mount on 3/4″ thick doors/cabinets.
PACKED: All bags are coded with product number, description and UPC code.

4490, 4491 Dominion Knob

QUICK SHIP

4490, 4491

Item #	Description	Wt./ Box	030, 050, 102, 112 140, 150, 260
4490.xxx.bin	Dominion Knob – 1″d. x 1.0″ p.	3.3	$10
4491.xxx.bin	Dominion Knob – 1.25″d. x 1.0″ p.	4.2	$10

NOTE: Knobs use 8-32 x 1″ screws and mount on 3/4″ thick doors/cabinets.
PACKED: All bags are coded with product number, description and UPC code.

***QUICK SHIP** is available in **limited functions and finishes.**
For complete listing, please refer to page 272.

BRASS

4493, 4494 Deco Knob

4493, 4494

QUICK SHIP

Item #	Description	Wt./ Box	030, 050 102, 150, 260
4493.xxx.bin	Deco Knob – 1.25″d. x 1.2″ p.	6.8	$10
4494.xxx.bin	Deco Knob – 1.5″d. x 1.3″ p.	9.3	$13

NOTE: Knobs use 8-32 x 1″ screws and mount on 3/4″ thick doors/cabinets.
PACKED: All bags are coded with product number, description and UPC code.

4629, 4630 Round Edinburgh Knob

4629, 4630

QUICK SHIP

Item #	Description	Wt./ Box	030, 112 150, 260
4629.xxx.bin	Round Edinburgh Knob – 1.25″d. x 1.0″ p.	4.1	$18
4630.xxx.bin	Round Edinburgh Knob – 1.5″d. x 1.0″ p.	5.6	$19

NOTE: Knobs use 8-32 x 1″ screws and mount on 3/4″ thick doors/cabinets.
PACKED: All bags are coded with product number, description and UPC code.

4635 Couture Collection Knob

4635

QUICK SHIP

Item #	Description	Wt./ Box	030, 050 112, 150, 260
4635.xxx.bin	Couture Knob - 1.33″ diameter x 1.15″ projection	2.7	$21

NOTE: Knobs use 8-32 x 1″ screws and mount on 3/4″ thick doors/cabinets.
PACKED: All bags are coded with product number, description and UPC code.

4636 Couture Collection Knob

4636

QUICK SHIP

Item #	Description	Wt./ Box	030, 050 112, 150, 260
4636.xxx.bin	Couture Knob - 1.27″d. x 1″ p.	2.4	$21

NOTE: Knobs use 8-32 x 1″ screws and mount on 3/4″ thick doors/cabinets.
PACKED: All bags are coded with product number, description and UPC code.

4645, 4646 Rope Knob

4645, 4646

QUICK SHIP

Item #	Description	Wt./ Box	030, 050 112, 150, 260
4645.xxx.bin	Rope Knob – 1.25″d. x 1.0″ p.	4	$19
4646.xxx.bin	Rope Knob – 1.5″d. x 1.2″ p.	6.3	$28

Knobs use 8-32 x 1″ screws and mount on 3/4″ thick doors/cabinets.
All bags are coded with product number, description and UPC code.

4650, 4655, 4660 Colonial Knob

4650, 4655, 4660

QUICK SHIP

Item #	Description	Wt./ Box	030, 050, 102, 112 140, 150, 260
4650.xxx.bin**	Colonial Knob – 1″d. x .9″ p.	2.5	$13**
4655.xxx.bin	Colonial Knob – 1.25″d. x 1.0″ p.	4	$14
4660.xxx.bin	Colonial Knob – 1.5″d. x 1.2″ p.	5.8	$18

** Not available in 112 & 140

NOTE: Knobs use 8-32 x 1″ screws and mount on 3/4″ thick doors/cabinets.
PACKED: All bags are coded with product number, description and UPC code.

***QUICK SHIP** is available in **limited functions and finishes.**
For complete listing, please refer to page 272.

4702, 4704, 4706 – 4709 Ornamental Knob

QUICK SHIP

4702, 4704, 4706, 4708, 4709

Item #	Description	Wt./ Box	030, 050, 102, 112 140, 150, 260
4702.xxx.bin**	Classic Knob – .75″ d. x .812″ p.	1.8	$9**
4704.xxx.bin	Classic Knob – 1″ d. x .937″ p.	3	$9
4706.xxx.bin	Classic Knob – 1.25″ d. x 1.157″ p.	6	$15
4708.xxx.bin	Classic Knob – 1.5″ d. x 1.406″ p.	10.4	$24
4709.xxx.bin†	Classic Knob – 1.75″ d. x 1.820″ p.	8.5	$31

** Not available in 112 & 140

†4709 is furnished with No. 1/4-20 x 1.25″ long truss head screw.

NOTE: Knobs use 8-32 x 1″ screws and mount on 3/4″ thick doors/cabinets.
PACKED: All bags are coded with product number, description and UPC code.

4910, 4913, 4939 Oval Knob

QUICK SHIP

4910, 4913, 4939

		Std Box	Wt./ Box	030, 050, 102, 112 140, 150, 260
4910.xxx.bin	Oval Knob – 1.125″d. x .75″ x 1.1″ p.	25	2.5	$16
4913.xxx.bin	Oval Knob – 1.375″d. x 1″ x 1.4″ p.	25	6.3	$18
4939.xxx.bin*	Oval Knob – 1.625″d. x 1.5″ x 1.9″ p.	20	9.3	$31*

* Not available in 112

Knobs use 8-32 x 1″ screws and mount on 3/4″ thick doors/cabinets.
All bags are coded with product number, description and UPC code.
5/8″ diameter at base

4915 Decorative Oval Knob

QUICK SHIP

4915

Item #	Description	Wt./ Box	030, 050, 102, 112 140, 150, 260
4915.xxx.bin	Decorative Oval Knob – 1″ x 1.5″ x 1.2″ projection	3.9	$16

NOTE: Knobs use 8-32 x 1″ screws and mount on 3/4″ thick doors/cabinets.
PACKED: All bags are coded with product number, description and UPC code.

4931, 4932 Ornamental Knob

QUICK SHIP

4931, 4932

Item #	Description	Wt./ Box	030, 050, 102, 112, 140, 150, 260
4931.xxx.bin*	Ornamental Knob – 1.5″ d. x 1.093″ p.	5.4	$20*
4932.xxx.bin**	Ornamental Knob – 2″ d. x 1.218″ p.	6.7	$28**

* Not available in 260
** Not available in 112 & 140

NOTE: Knobs use 8-32 x 1″ screws and mount on 3/4″ thick doors/cabinets.
PACKED: All bags are coded with product number, description and UPC code.

4960, 4961, 4968 Spherical Knob

QUICK SHIP

4960, 4961, 4968

Item #	Description	Wt./ Box	030, 050, 102, 112 140, 150, 260
4960.xxx.bin	Spherical Knob – 1″ d. x 1.312″ p.	4.8	$14
4961.xxx.bin	Spherical Knob – 1.25″ d. x 1.562″ p.	8.5	$16
4968.xxx.bin**	Spherical Knob – 1.5″ d. x 1.812″ p.	9.7	$22**

** Not available in 112 & 140

NOTE: Knobs use 8-32 x 1″ screws and mount on ¾″ thick doors/cabinets.
PACKED: All bags are coded with product number, description and UPC code.

4970 Palm Springs Knob

QUICK SHIP

4970

Item #	Description	Wt./ Box	030, 050 112, 150, 260
4970.xxx.bin	Palm Springs Knob – 1.5″ x .65″ x 1.145″ p.		$20

NOTE: Knobs use 8-32 x 1″ screws and mount on ¾″ thick doors/cabinets.
PACKED: All bags are coded with product number, description and UPC code.

***QUICK SHIP** is available in **limited functions and finishes.**
For complete listing, please refer to page 272.

BRASS

4973 Hollywood Hills Knob

QUICK SHIP

4973

Item #	Description	Wt.	003, 031, 033, 050 060, 102, 112 140, 150, 151 190, 260, 264	044, 055, 056
4973.xxx.bin	Hollywood Hills Knob -1.5" d x 1.125" p		$22	$28

NOTE: Knobs use 8-32 x 1″ screws and mount on ¾″ thick doors/cabinets.
PACKED: All bags are coded with product number, description and UPC code.

4343, 4349 Crystal Pull

QUICK SHIP

4343

4349

Item #	Description	Wt./ Box	030, 112 150, 260
4343.xxx	Crystal Pull – 3″ CTC x 1.4″ p.	2.5	$31
4349.xxx	Crystal Pull – 3″ CTC x 1.4″ p.	2.4	$31

NOTE: Pulls use 8-32 x 1″ screws and mount on ¾″ thick doors/cabinets.
PACKED: All bags are coded with product number, description and UPC code.

4356, 4357, 4361, 4362, 4366, 4367 Severin Fayerman Collection Pulls

QUICK SHIP

4356, 4357

QUICK SHIP

4361, 4362

QUICK SHIP

4366, 4367

Item #	Description	Wt./ Box	030, 112 140, 150, 260
4356.xxx.bin	Severin-A Pull – 3″ CTC x 1.3″ projection	4.6	$29
4357.xxx.bin	Severin-A Pull – 4″ CTC x 1.3″ p.	5.4	$32
4361.xxx.bin	Severin-B Pull – 3″ CTC x 1.37″ p.	.3	$29
4362.xxx.bin	Severin-B Pull – 4″ CTC x 1.45″ p.	4.7	$32
4366.xxx.bin	Severin-C Pull – 3″ CTC x 1.3″ p.	4.6	$29
4367.xxx.bin	Severin-C Pull – 4″ CTC x 1.3″ p.	5.3	$32

NOTE: Pulls use 8-32 x 1″ screws and mount on ¾″ thick doors/cabinets.
PACKED: All bags are coded with product number, description and UPC code.

*QUICK SHIP is available in **limited functions and finishes.**
For complete listing, please refer to page 272.

4371, 4372, 4376, 4377 Couture Collection Pulls

QUICK SHIP

Item #	Description	Wt./ Box	030, 050 112, 150, 260
4371.xxx.bin	Couture-B Pull – 3″ CTC x 1.15″ p.	3.7	$29
4372.xxx.bin	Couture-B Pull – 4″ CTC x 1.15″ p.	4.1	$32
4376.xxx.bin	Couture-A Pull – 3″ CTC x 1.45″ p.	2.7	$29
4377.xxx.bin	Couture-A Pull – 4″ CTC x 1.45″ p.	3.0	$32

NOTE: Pulls use 8-32 x 1″ screws and mount on ¾″ thick doors/cabinets.
PACKED: All bags are coded with product number, description and UPC code.

4371, 4372

QUICK SHIP

4376, 4377

4423, 4424 Cup Pull

QUICK SHIP

Item #	Description	Wt./ Box	030, 050, 102, 112 140, 150, 260
4423.xxx.bin	Cup Pull – 3″ CTC x 1.2″ p.	4.9	$20
4424.xxx.bin	Cup Pull – 4″ CTC x 1.2″ p.	5.8	$22

NOTE: Pulls use 8-32 x 1″ screws and mount on ¾″ thick doors/cabinets.
PACKED: All bags are coded with product number, description and UPC code.

4423, 4424

4437, 4438 Deco Pull

QUICK SHIP

Item #	Description	Wt./ Box	030, 050, 102, 112 140, 150, 260
4437.xxx.bin	Deco Pull – 3.5″ CTC x 1.2″ p.	5.6	$20
4438.xxx.bin	Deco Pull – 4″ CTC x 1.3″ p.	5.6	$21

NOTE: Pulls use 8-32 x 1″ screws and mount on ¾″ thick doors/cabinets.
PACKED: All bags are coded with product number, description and UPC code.

4437, 4438

4448, 4450, 4496, 4497 Arch Pull

QUICK SHIP

Item #	Description	Wt./ Box	030, 050, 102, 112 140, 150, 260
4496.xxx.bin	Arch Pull – 3.75″ CTC x 1.1″ p.	4.6	$15
4497.xxx.bin	Arch Pull – 5″ CTC x 1.2″ p.	5.9	$18
4448.xxx.bin**	Arch Pull – 6″ CTC x 1.2″ p.	5.3	$19**
4450.xxx.bin**	Arch Pull – 8″ CTC x 1.3″ p.	7.8	$22**

** Not available in 112 & 140

NOTE: Pulls use 8-32 x 1″ screws and mount on ¾″ thick doors/cabinets.
PACKED: All bags are coded with product number, description and UPC code.

4496, 4497
4448, 4450

4464 Melon Cup Pull

QUICK SHIP

Item #	Description	Wt./ Box	030, 050, 102 112, 150, 260
4464.xxx.bin	Melon Cup Pull – 3″ CTC x 1.7″ p.	3.1	$22

NOTE: Pulls use 8-32 x 1″ screws and mount on ¾″ thick doors/cabinets.
PACKED: All bags are coded with product number, description and UPC code.

4464

***QUICK SHIP** is available in **limited functions and finishes.**
For complete listing, please refer to page 272.

BRASS

4475, 4476 Spindle Pull

QUICK SHIP

4475, 4476

Item #	Description	Wt./ Box	030, 050 102, 150, 260
4475.xxx.bin	Spindle Pull – 2.5″ CTC	4.1	$16
4476.xxx.bin	Spindle Pull – 3.75″ CTC	5.3	$19

NOTE: Pulls use 8-32 x 1″ screws and mount on ¾″ thick doors/cabinets.
PACKED: All bags are coded with product number, description and UPC code.

4479, 4480 Oval Pull

QUICK SHIP

4479, 4480

Item #	Description	Wt./ Box	030, 050 102, 150, 260
4479.xxx.bin	Oval Pull – 3″ CTC	3.3	$16
4480.xxx.bin	Oval Pull – 4″ CTC	6.1	$19

NOTE: Pulls use 8-32 x 1″ screws and mount on ¾″ thick doors/cabinets.
PACKED: All bags are coded with product number, description and UPC code.

4487 – 4489 Dominion Pull

QUICK SHIP

4487, 4488, 4489

Item #	Description	Wt./ Box	030, 050, 102, 112 140, 150, 260
4487.xxx.bin	Dominion Pull – 3″ CTC	4.7	$18
4488.xxx.bin	Dominion Pull – 3.5″ CTC	5.3	$19
4489.xxx.bin	Dominion Pull – 4″ CTC	6	$20

NOTE: Pulls use 8-32 x 1″ screws and mount on ¾″ thick doors/cabinets.
PACKED: All bags are coded with product number, description and UPC code.

4611, 4612 Edinburgh Pull

QUICK SHIP

4611, 4612

Item #	Description	Wt./ Box	030, 112 150, 260
4611.xxx.bin	Edinburgh Pull – 3.5″ CTC	6.9	$22
4612.xxx.bin	Edinburgh Pull – 4″ CTC	8	$24

NOTE: Pulls use 8-32 x 1″ screws and mount on ¾″ thick doors/cabinets.
PACKED: All bags are coded with product number, description and UPC code.

4672, 4674, 4676 Wire Pull

QUICK SHIP

4672, 4674, 4676

Item #	Description	Wt./ Box	030, 050, 102, 112 140, 150, 260
4672.xxx.bin	Wire Pull – 3″ CTC	3.4	$15
4674.xxx.bin	Wire Pull – 3.5″ CTC	3.5	$15
4676.xxx.bin	Wire Pull – 4″ CTC	4.3	$16

NOTE: Pulls use 8-32 x 1″ screws and mount on ¾″ thick doors/cabinets.
PACKED: All bags are coded with product number, description and UPC code.

4964 – 4967 Colonial Pull

QUICK SHIP

4966, 4967, 4964

Item #	Description	Wt./ Box	030, 050, 102, 112 140, 150, 260
4966.xxx.bin	Colonial Pull – 3″ CTC	5.6	$16
4967.xxx.bin**	Colonial Pull – 3.5″ CTC	2.6	$18
4964.xxx.bin	Colonial Pull – 4″ CTC	7	$28

** Not available in 112 & 140

NOTE: Pulls use 8-32 x 1″ screws and mount on ¾″ thick doors/cabinets.
PACKED: All bags are coded with product number, description and UPC code.

*QUICK SHIP is available in **limited functions and finishes.**
For complete listing, please refer to page 272.

4975, 4976 Palm Springs Pull

QUICK SHIP

Item #	Description	Wt./ Box	030, 112 140, 150, 260
4975.xxx.bin	Palm Springs Pull – 3.75″ CTC x 1.145″ p.		$30
4976.xxx.bin	Palm Springs Pull – 6″ CTC x 1.145″ p.		$33

NOTE: Pulls use 8-32 x 1″ screws and mount on ¾″ thick doors/cabinets.
PACKED: All bags are coded with product number, description and UPC code.

4975

4976

4485, 4486 Hollywood Hills Pulls

QUICK SHIP

Item #	Description	Wt.	003, 031, 033, 050 060, 102, 112 140, 150, 151 190, 260, 264	044, 055, 056
4485.xxx.bin	Hollywood Hills Pull -3.75" CTC x 1.25" p		$33	$38
4486.xxx.bin	Hollywood Hills Pull -6" CTC x 1.25" p		$38	$42

NOTE: Pulls use 8-32 x 1″ screws and mount on ¾″ thick doors/cabinets.
PACKED: All bags are coded with product number, description and UPC code.

4485

4486

4613 Round Edinburgh

QUICK SHIP

Item #	Description	Wt./ Box	030, 112 150, 260
4613.xxx.bin	Round Edinburgh Back Plate – 1.5″	1.5	$10

PACKED: In individual polybags. All bags are coded with product number, description and UPC code.

4613

***QUICK SHIP** is available in **limited functions and finishes.**
For complete listing, please refer to page 272.

BRASS

4900 – 4903 Knob Back

QUICK SHIP

4900

4901

4902, 4903

Item #	Description	Wt./ Box	030, 050, 102, 112 140, 150, 260
4900.xxx.bin	Knob Back Plate – 1.25″ d.	1.3	$10*
4901.xxx.bin**	Knob Back Plate – 1.375″ d.	2.5	$11**
4902.xxx.bin	Knob Back Plate – 1.5″ d.	3.0	$11
4903.xxx.bin**	Back Plate for 4708 and 4709 Knobs	4.5	$10**

* Not available in 140

** Not available in 112 & 140

PACKED: In individual polybags. All bags are coded with product number, description and UPC code.

4989 Cabinet Pull Base

QUICK SHIP

4989

on 4964 colonial pull (sold individually, need two per pull).

Item #	Description	Wt./ Box	030, 050, 102, 112 140, 150, 260
4989.xxx.bin	Cabinet Pull Base – .625″ d.	0.5	$3

PACKED:: In individual polybags. All bags are coded with product number, description and UPC code.

*QUICK SHIP is available in limited functions and finishes.
For complete listing, please refer to page 272.

APPLIANCE PULLS

4358, 4359, 4360

QUICK SHIP

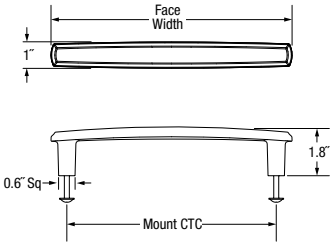

Item #	Description	Wt./ Box	030, 112, 140 150, 260
4358.xxx	Appliance Pull - 8″ CTC	5.2	$104
4359.xxx	Appliance Pull - 12″ CTC	7.6	$165
4360.xxx	Appliance Pull - 18″ CTC	10.4	$227

NOTE: Appliance pulls use 10 -24 X 1.3″ screws and mount on doors between .75″ to 1″ thick.
PACKED: One pull and screw pack in a box, and coded with product number, description and UPC code.

Dimensions	Mount CTC	Face Width
4358	8″	9.21″
4359	12″	13.21″
4360	18″	19.21″

4363, 4364, 4365

QUICK SHIP

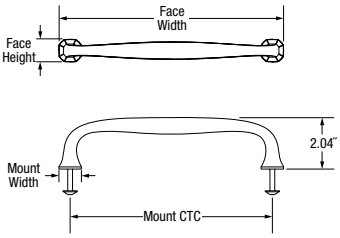

Item #	Description	Wt./ Box	030, 112, 140 150, 260
4363.xxx	Appliance Pull - 8″ CTC	3.9	$104
4364.xxx	Appliance Pull - 12″ CTC	5.1	$165
4365.xxx	Appliance Pull - 18″ CTC	10.3	$227

NOTE: Appliance pulls use 10 -24 X 1.3″ screws and mount on doors between .75″ to 1″ thick.
PACKED: One pull and screw pack in a box, and coded with product number, description and UPC code.

Dimensions	Mount CTC	Face Width	Face Height
4363	8″	8.9″	0.9″
4364	12″	12.9″	0.9″
4365	18″	19.1″	1.07″

4368, 4369, 4370

QUICK SHIP

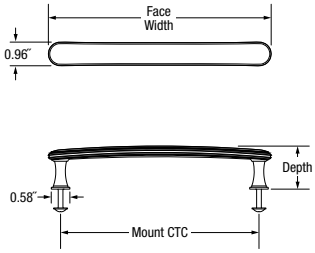

Item #	Description	Wt./ Box	030, 112, 140 150, 260
4368.xxx	Appliance Pull - 8″ CTC	4.2	$104
4369.xxx	Appliance Pull - 12″ CTC	5.9	$165
4370.xxx	Appliance Pull - 18″ CTC	8.7	$227

NOTE: Appliance pulls use 10 -24 X 1.3″ screws and mount on doors between .75″ to 1″ thick.
PACKED: One pull and screw pack in a box, and coded with product number, description and UPC code.

Dimensions	Mount CTC	Depth	Face Width
4368	8″	1.75″	9″
4369	12″	1.75″	13″
4370	18″	1.77″	19″

4373, 4374, 4375

QUICK SHIP

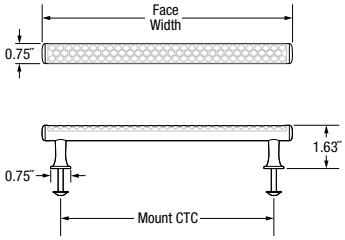

Item #	Description	Wt./ Box	030, 050, 112 150, 260
4373.xxx	Appliance Pull - 8″ CTC	4.4	$104
4374.xxx	Appliance Pull - 12″ CTC	6.1	$165
4375.xxx	Appliance Pull - 18″ CTC	8.5	$227

NOTE: Appliance pulls use 10 -24 X 1.3″ screws and mount on doors between .75″ to 1″ thick.
PACKED: One pull and screw pack in a box, and coded with product number, description and UPC code.

Dimensions	Mount CTC	Face Width
4373	8″	9.4″
4374	12″	12.8″
4375	18″	19.3″

***QUICK SHIP** is available in **limited functions and finishes.**
For complete listing, please refer to page 272.

APPLIANCE PULLS

QUICK SHIP

4378, 4379, 4380

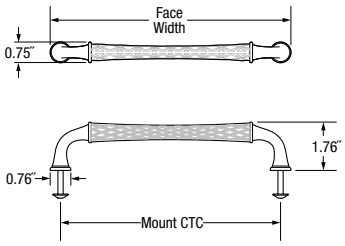

Item #	Description	Wt./ Box	030, 050, 112 150, 260
4378.xxx	Appliance Pull - 8″ CTC	2.8	$104
4379.xxx	Appliance Pull - 12″ CTC	4.0	$165
4380.xxx	Appliance Pull - 18″ CTC	6.4	$227

NOTE: Appliance pulls use 10 -24 X 1.3″ screws and mount on doors between .75″ to 1″ thick.

PACKED: One pull and screw pack in a box, and coded with product number, description and UPC code.

Dimensions	Mount CTC	Face Width
4378	8″	8.8″
4379	12″	12.8″
4380	18″	18.8″

4980, 4981

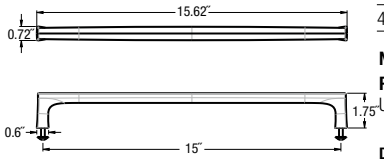

Item #	Description	Wt./ Box	030, 050, 112 150, 260
4980.xxx	Appliance Pull - 15″ CTC x 1.75″ p.	4.8	$196
4981.xxx	Appliance Pull - 18″ CTC x 1.75″ p.	6.4	$227

NOTE: Appliance pulls use 10 -24 X 1.3″ screws and mount on doors between .75″ to 1″ thick.

PACKED: One pull and screw pack in a box, and coded with product number, description and UPC code.

Dimensions	Mount CTC	Face Width
4980	15″	15.62″
4981	18″	18.62″

QUICK SHIP

4983, 4984

Item #	Description	Wt.	003, 031, 033, 050 060, 102, 112 140, 150, 151 190, 260, 264	044, 055, 056
4983.xxx	Appliance Pull - 15" CTC x 1.91" p		$211	$246
4984.xxx	Appliance Pull - 18" CTC x 1.91" p		$239	$275

NOTE: Appliance pulls use 10 -24 X 1.3″ screws and mount on doors between .75″ to 1″ thick.

PACKED: One pull and screw pack in a box, and coded with product number, description and UPC code.

.

4983

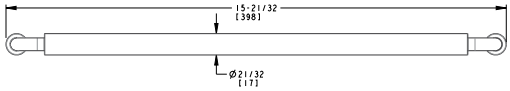

4984

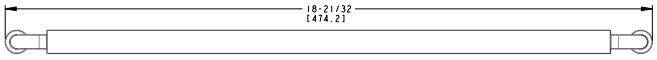

*QUICK SHIP is available in **limited functions and finishes.**
For complete listing, please refer to page 272.

NOTES

NUMERICAL INDEX

xxxx.xxx.MTG1	235
xxxx.xxx.MTG2	235
xxxx.xxx.MTG3	235
xxxx.xxx.MTG5	235
xxxx.xxx.MTG8	235
0012.xxx	223
0014.xxx	223
0015.xxx	223
0017.xxx	223
0050.324	223
0052.324	223
0102.xxx	224
0103.xxx	224
0105.xxx	224
0106.xxx	224
0113.xxx	224
0116.xxx	224
0129.xxx	59
0155.xxx	225
0156.xxx	225
0174.xxx	59
0175.xxx	59
0176.xxx	59
0195.xxx	225
0250.xxx	227
0310.xxx.ANGL	227
0310.xxx.HDAS	227
0310.xxx.MORT	227
0310.xxx.SURF	227
0310.xxx.UNIV	227
0320.xxx.MORT	227
0320.xxx.UNIV	227
0321.xxx	227
0322.xxx	227
0379.xxx	228
0380.xxx	228
0381.xxx	228
0382.xxx	228
0383.xxx	228
0392.xxx	229
0393.xxx	229
0394.xxx	229
0395.xxx	229
0397.xxx	229
0403.xxx	58
0404.xxx	58
0405.xxx	58
0406.xx	58
0407.xxx	58
0413.xxx	55
0413.xxx.LTP	55
0414.xxx	55
0415.xxx	58
0416.xxx	58
0417.022	58
0418.xxx	55
0418.xxx.LTP	55
0419.xxx	55
0421.xxx	58
0422.xxx	58
0423.xxx	58
0425.xxx	230
0426.xxx	230
0430.xxx	230
0432.xxx	230
0440.xxx	230
0452.xxx	231
0458.xxx	231
0465.xxx	230
0470.xxx	231
0509.004	53
0508.004	167
0509.004.A	53
0510.004	53
0510.004.A	53
0511.004	53
0511.004.A	53
0512.004	53
0512.004.A	53
0513.004	53
0513.004.A	53
0514.004	53
0514.004.A	53
0515.004	53
0515.004.A	53
0516.004	53
0516.004.A	53
0519.004	53
0519.004.A	53
0520.004	53
0520.004.A	53
0521.004	53
0521.004.A	53
0522.004	53
0522.004.A	53
0523.004	53
0524.004	53
0524.004.A	53
0525.004	53
0525.004.A	53
0530.004	53
0530.004.A	53
0531.004	53
0531.004.A	53
0532.004	53
0532.004.A	53
0533.004	53
0533.004.A	53
0539.004	53
0600.xxx.12	233
0600.xxx.18	233
0600.xxx.24	233
0602.xxx	233
0603.xxx	233
0604.xxx	233
0622.xxx	233
0626.xxx	233
0742.xxx	232
0781.xxx	232
0782.xxx	232
0950.xxx	233
0951.xxx	233
0952.xxx	233
1030.xxx.I	243
1030.000.PIN	242
1035.xxx.I	243
1035.xxx.INRP	243
1035.xxx.ITIP	243
1035.000.PIN	242
1040.xxx.I	243
1040.xxx.INRP	243
1040.000.PIN	242
1041.xxx.I	245
1041.xxx.INRP	245
1045.xxx.I	243
1045.xxx.INRP	243
1045.000.PIN	242
1046.xxx.I	245
1046.xxx.INRP	245
1051.xxx.I	245
1051.xxx.INRP	245
1051.000.PIN	242
1052.xxx.MS	242
1063.xxx.MS	242
1080.xxx.I	244
1081.xxx.I	244
1083.xxx.I	244
1090.xxx.	243
1090.xxx.I	243
1091.xxx.	243
1091.xxx.I	243
1092.xxx.	243
1092.xxx.I	243
1093.xxx.	243
1093.xxx.I	243
1135.xxx.I	244
1140.xxx.I	244
1327.009	51
1419.xxx.WS	242
1435.xxx.I	244
1440.xxx.I	244
1480.xxx.WS	242
2000.xxx.0630	234
2000.xxx.0634	234
2000.xxx.0830	234
2000.xxx.0834	234
2282.xxx	235
2285.xxx	235
2331.xxx	235
2335.xxx	235
2337.xxx	235
2355.xxx	235
2357.xxx	235
2556.xxx	236
2557.xxx	236
2560.xxx	236
2564.xxx	236
2574.xxx	236
2575.xxx	236
2576.xxx	236
2578.xxx	236
2584.xxx	236
2585.xxx	237
2597.xxx	237
2598.xxx	237
2602.xxx	237
2604.xxx	237
2617.xxx	238
2673.xxx	238
2674.xxx	238
2693.xxx	238
4000.xxx	239
4005.xxx	239
4010.xxx	239
4015.xxx	240
4041.406	240
4045.xxx	240
4050.xxx	240
4055.xxx	240
4057.406	240
4100	240
4100.xxx	240
4101	240
4101.406	240
4105	240
4105.xxx	240
4252.xxx	240
4273.xxx	240
4293.xxx	240
4301.xxx	248
4302.xxx	248
4318.xxx	248
4319.xxx	248
4324.xxx	248
4334.xxx.S	248
4336.xxx.S	248
4343.xxx	252
4349.xxx	252
4354.xxx	248
4356.xxx.bin	252
4357.xxx.bin	252
4358.xxx	257
4359.xxx	257
4360.xxx	257
4361.xxx.bin	252
4362.xxx.bin	252
4363.xxx	257
4364.xxx	257
4365.xxx	257
4366.xxx.bin	252
4367.xxx.bin	252
4368.xxx	257
4369.xxx	257
4370.xxx	257
4371.xxx.bin	253
4372.xxx.bin	253
4373.xxx	257
4374.xxx	257
4375.xxx	257
4376.xxx.bin	253
4377.xxx.bin	253
4378.xxx	258
4379.xxx	258
4380.xxx	258
4423.xxx.bin	253
4424.xxx.bin	253
4437.xxx.bin	253
4438.xxx.bin	253
4446.xxx.bin	248
4447.xxx.bin	248
4448.xxx.bin	253
4450.xxx.bin	253
4453.xxx.bin	249
4455.xxx.bin	249
4456.xxx.bin	249
4458.xxx.bin	249
4459.xxx.bin	249
4464.xxx.bin	253
4475.xxx.bin	254
4476.xxx.bin	254
4479.xxx.bin	254
4480.xxx.bin	254
4485.xxx.bin	255
4486.xxx.bin	255
4487.xxx.bin	254
4488.xxx.bin	254
4489.xxx.bin	254
4490.xxx.bin	249
4491.xxx.bin	249
4493.xxx.bin	250

4494.xxx.bin	250
4496.xxx.bin	253
4497.xxx.bin	253
4505.xxx	239
4507	239
4507.406	239
4510.xxx	239
4611.xxx.bin	254
4612.xxx.bin	254
4613.xxx.bin	255
4629.xxx.bin	250
4630.xxx.bin	250
4635.xxx.bin	250
4636.xxx.bin	250
4645.xxx.bin	250
4646.xxx.bin	250
4650.xxx.bin	250
4655.xxx.bin	250
4660.xxx.bin	250
4672.xxx.bin	254
4674.xxx.bin	254
4676.xxx.bin	254
4702.xxx.bin	251
4704.xxx.bin	251
4706.xxx.bin	251
4708.xxx.bin	251
4709.xxx.bin	251
4740.xxx.CD	246
4741.xxx.CD	246
4742.xxx.CD	246
4743.xxx.CD	246
4750.xxx.CD	246
4751.xxx.CD	247
4752.xxx.CD	246
4754.xxx.CD	246
4756.xxx.CD	247
4757.xxx.CD	247
4761.xxx.CD	247
4764.xxx.CD	246
4766.xxx.CD	247
4769.xxx.CD	247
4770.xxx.CD	247
4771.xxx.CD	246
4772.xxx.CD	247
4775.xxx.CD	247
4780.xxx.CD	247
4781.xxx.CD	247
4782.xxx.CD	247
4850.xxx	225
4851.xxx	225
4852.xxx	225
4853.xxx	226
4858.xxx	226
4900.xxx.bin	256
4901.xxx.bin	256
4902.xxx.bin	256
4903.xxx.bin	256
4910.xxx.bin	251
4913.xxx.bin	251
4915.xxx.bin	251
4931.xxx.bin	251
4932.xxx.bin	251
4939.xxx.bin	251
4960.xxx.bin	251
4961.xxx.bin	251
4964.xxx.bin	254
4966.xxx.bin	254
4967.xxx.bin	254
4968.xxx.bin	251
4970.xxx.bin	251
4975.xxx.bin	255
4976.xxx.bin	255
4980.xxx.bin	258
4981.xxx.bin	258
4989.xxx.bin	256
5000.xxx.IMR	21
5000.xxx.MR	21
5000.xxx.MRPN	21
5001.xxx.IMR	21
5001.xxx.MR	21
5001.xxx.MRPN	21
5002.xxx	38
5002.xxx.FD	38
5002.xxx.I	38
5002.xxx.IDM	38
5003.xxx	38
5003.xxx.FD	38
5003.xxx.I	38
5003.xxx.IDM	38
5004.xxx	38
5004.xxx.FD	38
5004.xxx.I	38
5004.xxx.IDM	38
5005.xxx.IMR	21
5005.xxx.MR	21
5005.xxx.MRPN	21
5006.xxx	39
5006.xxx.FD	39
5006.xxx.I	39
5006.xxx.IDM	39
5009.xxx.IMR	21
5009.xxx.MR	21
5009.xxx.MRPN	21
5010.xxx	39
5010.xxx.FD	39
5010.xxx.I	39
5010.xxx.IDM	39
5011.xxx.IMR	21
5011.xxx.MR	21
5011.xxx.MRPN	21
5013.xxx.IMR	22
5013.xxx.MR	22
5013.xxx.MRPN	22
5015.xxx.FD	13
5015.xxx.IDM	13
5015.xxx.IMR	22
5015.xxx.MR	22
5015.xxx.MRPN	22
5015.xxx.PASS	13
5015.xxx.PRIV	13
5016.xxx	40
5016.xxx.FD	40
5016.xxx.I	40
5016.xxx.IDM	40
5017.xxx	38
5017.xxx.FD	38
5017.xxx.I	38
5017.xxx.IDM	38
5019.xxx	40
5019.xxx.FD	40
5019.xxx.I	40
5019.xxx.IDM	40
5020.xxx.FD	13
5020.xxx.IDM	13
5020.xxx.IMR	22
5020.xxx.MR	22
5020.xxx.MRPN	22
5020.xxx.PASS	13
5020.xxx.PRIV	13
5021.xxx	40
5021.xxx.FD	40
5021.xxx.I	40
5021.xxx.IDM	40
5023.xxx.IMR	22
5023.xxx.MR	22
5023.xxx.MRPN	22
5024.xxx.IMR	22
5024.xxx.MR	22
5025.xxx.FD	13
5025.xxx.IDM	13
5025.xxx.IMR	23
5025.xxx.MR	23
5025.xxx.MRPN	23
5025.xxx.PASS	13
5025.xxx.PRIV	13
5028.xxx	41
5028.xxx.FD	41
5028.xxx.I	41
5028.xxx.IDM	41
5030.xxx.IMR	23
5030.xxx.MR	23
5030.xxx.MRPN	23
5032.xxx	39
5032.xxx.FD	39
5032.xxx.I	39
5032.xxx.IDM	39
5035.xxx	41
5035.xxx.FD	41
5035.xxx.I	41
5035.xxx.IDM	41
5038.xxx	41
5038.xxx.FD	41
5038.xxx.I	41
5038.xxx.IDM	41
5041.xxx.IMR	23
5041.xxx.MR	23
5041.xxx.MRPN	23
5042.xxx	42
5042.xxx.FD	42
5042.xxx.I	42
5042.xxx.IDM	42
5045.xxx.IMR	23
5045.xxx.MR	23
5045.xxx.MRPN	23
5046.xxx	39
5046.xxx.FD	39
5046.xxx.I	39
5046.xxx.IDM	39
5047.xxx	42
5047.xxx.FD	42
5047.xxx.I	42
5047.xxx.IDM	42
5048.xxx	38
5048.xxx.FD	38
5048.xxx.I	38
5048.xxx.IDM	38
5050.xxx.IMR	23
5050.xxx.MR	23
5050.xxx.MRPN	23
5053.xxx	40
5053.xxx.FD	40
5053.xxx.I	40
5053.xxx.IDM	40
5055.xxx.IMR	24
5055.xxx.MR	24
5055.xxx.MRPN	24
5056.xxx	42
5056.xxx.FD	42
5056.xxx.I	42
5056.xxx.IDM	42
5057.xxx.IMR	24
5057.xxx.MR	24
5057.xxx.MRPN	24
5058.xxx	42
5058.xxx.FD	42
5058.xxx.I	42
5058.xxx.IDM	42
5060.xxx.IMR	24
5060.xxx.MR	24
5060.xxx.MRPN	24
5062.xxx	40
5062.xxx.FD	40
5062.xxx.I	40
5062.xxx.IDM	40
5064.xxx.IMR	24
5064.xxx.MR	24
5064.xxx.MRPN	24
5066.xxx.IMR	24
5066.xxx.MR	24
5066.xxx.MRPN	24
5067.xxx.IMR	25
5067.xxx.MR	25
5067.xxx.MRPN	25
5068.xxx.IMR	25
5068.xxx.MR	25
5068.xxx.MRPN	25
5069.xxx.IMR	25
5069.xxx.MR	25
5069.xxx.MRPN	25
5070.xxx	39
5070.xxx.FD	39
5070.xxx.I	39
5070.xxx.IDM	39
5073.xxx.IMR	25
5073.xxx.MR	25
5073.xxx.MRPN	25
5075.xxx	41
5075.xxx.FD	41
5075.xxx.I	41
5075.xxx.IDM	41
5076.xxx	41
5076.xxx.FD	41
5076.xxx.I	41
5076.xxx.IDM	41
5077.004	54
5077.004.A	54
5077.xxx.IMR	25
5077.xxx.MR	25
5078.xxx	41
5078.xxx.FD	41
5078.xxx.I	41
5078.xxx.IDM	41
5080.xxx.FD	13
5080.xxx.IDM	13
5080.xxx.IMR	26
5080.xxx.MR	26
5080.xxx.PASS	13
5080.xxx.PRIV	13
5081.xxx.A	59
5082.xxx.A	59

5084.009.0002	51
5084.xxx.A	59
5090.020.A	54
5091.004	54
5091.004.A	54
5092.004	54
5092.004.A	54
5097.009.N	51
5098.004.A	54
5098.004.N	54
5098.009.N	54
5099.004	54
5101.xxx.MR	28
5101.xxx.MRPN	28
5101.xxx.RMR(.LMR)	28
5103.xxx.MR	28
5103.xxx.MRPN	28
5103.xxx.RMR(.LMR)	28
5104.xxx.MR	28
5104.xxx.MRPN	28
5104.xxx.RMR(.LMR)	28
5105.xxx.MR	28
5105.xxx.MRPN	28
5105.xxx.RMR(.LMR)	28
5106.xxx.MR	28
5106.xxx.MRPN	28
5106.xxx.RMR(.LMR)	28
5107.xxx.MR	29
5107.xxx.MRPN	29
5107.xxx.RMR(.LMR)	29
5108.xxx.MR	29
5108.xxx.MRPN	29
5108.xxx.RMR(.LMR)	29
5112.xxx.MR	29
5112.xxx.MRPN	29
5112.xxx.RMR(.LMR)	29
5113.xxx.MR	29
5113.xxx.MRPN	29
5113.xxx.RMR(.LMR)	29
5116.xxx.MR	29
5116.xxx.MRPN	29
5116.xxx.RMR(.LMR)	29
5118.xxx.MR	30
5118.xxx.MRPN	30
5118.xxx.RMR(.LMR)	30
5119.xxx	40
5119.xxx.I	40
5121.xxx.MR	30
5121.xxx.MRPN	30
5121.xxx.RMR(.LMR)	30
5122.xxx.MR	30
5122.xxx.MRPN	30
5122.xxx.RMR(.LMR)	30
5123.xxx	39

5123.xxx.I	39
5125.xxx.MR	30
5125.xxx.MRPN	30
5125.xxx.RMR(.LMR)	30
5127.xxx	41
5127.xxx.I	41
5129.xxx	41
5129.xxx.I	41
5132.xxx.MR	30
5132.xxx.MRPN	30
5132.xxx.RMR(.LMR)	30
5134.xxx	41
5134.xxx.I	41
5137.xxx.MR	31
5137.xxx.MRPN	31
5137.xxx.RMR(.LMR)	31
5138.xxx.MR	31
5138.xxx.MRPN	31
5138.xxx.RMR(.LMR)	31
5139.xxx	39
5139.xxx.I	39
5141.xxx.MR	31
5141.xxx.MRPN	31
5141.xxx.RMR(.LMR)	31
5142.xxx	42
5142.xxx.R(L)	42
5145.xxx	40
5145.xxx.I	40
5146.xxx	39
5146.xxx.I	39
5147.xxx	42
5147.xxx.I	42
5148.xxx	38
5148.xxx.I	38
5149.xxx	38
5149.xxx.I	38
5151.xxx	39
5151.xxx.I	39
5152.xxx.MR	31
5152.xxx.MRPN	31
5152.xxx.RMR(.LMR)	31
5153.xxx	40
5153.xxx.I	40
5155.xxx	41
5155.xxx.I	41
5156.xxx	41
5156.xxx.I	41
5157.xxx	41
5157.xxx.I	41
5158.xxx	42
5158.xxx.I	42
5160.xxx	42
5160.xxx.I	42
5161.xxx.MR	31

5161.xxx.MRPN	31
5161.xxx.RMR(.LMR)	31
5162.xxx.MR	32
5162.xxx.MRPN	32
5162.xxx.RMR(.LMR)	31
5162.xxx.PASS	14
5162.xxx.PRIV	14
5162.xxx.RDM	14
5162.xxx.LDM	14
5162.xxx.FD	14
5164.xxx.MR	32
5164.xxx.MRPN	32
5164.xxx.RMR(.LMR)	32
5165.xxx.MR	32
5165.xxx.MRPN	32
5165.xxx.RMR(.LMR)	32
5166.xxx.MR	32
5166.xxx.MRPN	32
5166.xxx.RMR(.LMR)	32
5173.xxx.MR	32
5173.xxx.RMR(.LMR)	32
5174.022	58
5187.xxx	61
5190.xxx.MR	33
5190.xxx.MRPN	33
5190.xxx.RMR (.LMR	33
5194.xxx.A	49
5197.xxx	49
5198.000.A	60
5199	51
5205.xxx.ENTR	15
5205.xxx.FD	15
5206.xxx.ENTR	15
5206.xxx.FD	15
5208.xxx.ENTR	15
5209.xxx.ENTR	15
5210.xxx.ENTR	15
5210.xxx.FD	15
5211.xxx.ENTR	15
5211.xxx.FD	15
5213.xxx.ENTR	15
5214.xxx.ENTR	15
5215.xxx.ENTR	15
5215.xxx.FD	15
5216.xxx.ENTR	15
5216.xxx.FD	15
5218.xxx.ENTR	15
5219.xxx.ENTR	15
5225.xxx.ENTR	15
5225.xxx.FD	15
5226.xxx.ENTR	15
5226.xxx.FD	15
5228.xxx.ENTR	15
5229.xxx.ENTR	15

5230.xxx.ENTR	16
5230.xxx.FD	16
5231.xxx.ENTR	16
5231.xxx.FD	16
5233.xxx.ENTR	16
5234.xxx.ENTR	16
5237.xxx.ENTR	16
5237.xxx.FD	16
5237.xxx.LRFD	17
5237.xxx.RENT(.LENT)	16
5238.xxx.ENTR	16
5238.xxx.FD	16
5238.xxx.LRFD	17
5238.xxx.RENT(.LENT)	16
5239.xxx.ENTR	16
5239.xxx.RENT(.LENT)	16
5241.xxx.ENTR	16
5241.xxx.RENT(.LENT)	16
5245.xxx.FD	18
5245.xxx.RENT(.LENT)	18
5246.xxx.FD	18
5246.xxx.RENT(.LENT)	18
5248.xxx.RENT(.LENT)	18
5249.xxx.RENT(.LENT)	18
5250.xxx.ENTR	16
5250.xxx.FD	16
5251.xxx.ENTR	16
5251.xxx.FD	16
5253.xxx.ENTR	16
5254.xxx.ENTR	16
5255.xxx.FD	18
5255.xxx.RENT(.LENT)	18
5256.xxx.FD	18
5256.xxx.RENT(.LENT)	18
5258.xxx.RENT(.LENT)	18
5259.xxx.RENT(.LENT)	18
5260.xxx.RENT	16
5260.xxx.LENT	16
5261.xxx.RENT	16
5261.xxx.LENT	16
5260.xxx.FD	16
5261.xxx.FD	16
5263.xxx.RENT	16
5263.xxx.LENT	16
5264.xxx.RENT	16
5264.xxx.LENT	16
5275.xxx.ENTR	15
5276.xxx.ENTR	15
5275.xxx.FD	15
5276.xxx.FD	15
5278.xxx.ENTR	15
5279.xxx.ENTR	15
5285.xxx.FD	17
5285.xxx.RENT(.LENT)	17

5286.xxx.FD	17
5286.xxx.RENT(.LENT)	17
5288.xxx.RENT(.LENT)	17
5289.xxx.RENT(.LENT)	17
5300.xxx.EFLS	52
5300.xxx.9	80
5397.xxx.15A	77
5397.xxx.15B	77
5397.xxx.15E	77
5397.xxx.15F	77
5398.xxx.A	80
5398.xxx.B	80
5398.xxx.C	80
5398.xxx.D	80
5398.xxx.G	80
5398.xxx.H	80
5399.xxx.A	80
5399.xxx.B	80
5399.xxx.C	80
5399.xxx.D	80
5399.xxx.G	80
5399.xxx.H	80
5399.xxx.K	80
5399.xxx.M	80
5399.xxx.N	80
5440V.xxx.MR	33
5440V.xxx.RMR(.LMR)	33
5445V.xxx.FD	14
5445V.xxx.MR	33
5445V.xxx.PASS	14
5445V.xxx.PRIV	14
5445V.xxx.RDM(.LDM)	33
5445V.xxx.RMR(.LMR)	33
5447V.xxx.MR	33
5447V.xxx.RMR(.LMR)	33
5452V.xxx.FD	14
5452V.xxx.MR	33
5452V.xxx.PASS	14
5452V.xxx.PRIV	14
5452V.xxx.RDM(.LDM)	33
5452V.xxx.RMR(.LMR)	33
5455V.xxx.FD	14
5455V.xxx.MR	34
5455V.xxx.PASS	14
5455V.xxx.PRIV	14
5455V.xxx.RDM(.LDM)	34
5455V.xxx.RMR(.LMR)	34
5460V.xxx.MR	34
5460V.xxx.RMR(.LMR)	34
5485V.xxx.FD	14
5485V.xxx.MR	34
5485V.xxx.PASS	14
5485V.xxx.PRIV	14
5485V.xxx.RDM(.LDM)	34

5485V.xxx.RMR(.LMR)	34
5510.xxx(.ASA, .FLS)	50
5510.xxx.0030	51
5510.xxx.ASTR	52
5510.xxx.E158	52
5510.xxx.E178	52
5510.xxx.E214	52
5510.xxx.FSTR	52
5510.xxx.P(.ASA, .FLS)	50
5510.xxx.TSTR	52
5512.xxx(.ASA)	50
5512.xxx.P(.ASA)	50
5513.xxx(.ASA, .FLS)	50
5513.xxx.0030	50
5513.xxx.P(.ASA, .FLS)	50
5515.xxx(.ASA)	50
5515.xxx.P(.ASA)	50
5520.xxx(.ASA, .FLS)	50
5520.xxx.P(.ASA, .FLS)	50
5522.xxx(.ASA)	50
5522.xxx.P(.ASA)	50
5523.xxx(.ASA, .FLS)	50
5523.xxx.P(.ASA, .FLS)	50
5525.xxx(.ASA)	50
5525.xxx.P(.ASA)	50
5528.xxx.R(.L)	52
5600.xxx.R(.L,.RR,.LR)	202
5600.xxx.RFD(.LFD)	202
5601.xxx	204
5602.xxx.R(.L,.RR,.LR)	202
5602.xxx.RFD(.LFD)	202
5603.xxx	204
5604.xxx.R(.L,.RR,.LR)	202
5604.xxx.RFD(.LFD)	202
5606.xxx	204
5608.xxx.RSKC(.LSKC)	204
5626.xxx.RSKC(.LSKC)	204
5628.xxx	204
5629.xxx.RSKC(.LSKC)	204
5633.xxx	204
5634.xxx.R(.L,.RR,.LR)	202
5634.xxx.RFD(.LFD)	202
5636.xxx.R(.L,.RR,.LR)	203
5636.xxx.RFD(.LFD)	203
5641.xxx	204
5642.xxx	204
5643.xxx	204
5644.xxx.R(.L,.RR,.LR)	203
5644.xxx.RFD(.LFD)	203
5671.xxx	204
5672.xxx	204
5673.xxx	204
5674.xxx.RSKC(.LSKC)	204
5704.xxx.R(.L,.RR,.LR)	202
5704.xxx.RFD(.LFD)	202
5722.xxx	203
5723.xxx.R(.L)	203
5753.xxx	205
5754.xxx	205
5755.xxx	205
5758.xxx	205
6001	144
6001.xxx.Suffix	144
6010.xxx.0004	153
6010.xxx.Suffix	146
6020.xxx.Suffix	144
6021.xxx.0004	153
6021.xxx.Suffix	144
6025.xxx.Suffix	144
6037.xxx.XXXX	152
6038.xxx.XXXX	152
6039.xxx.XXXX	152
6040.xxx	152
6040.xxx.R(.L)	152
6041.xxx	152
6041.xxx.R(.L)	152
6042.xxx	153
6043.xxx	152
6043.xxx.R(.L)	152
6051.xxx.Suffix	151
6053.xxx.Suffix	151
6055.xxx.Suffix	146
6060.xxx.0004	153
6060.xxx.Suffix	146
6065.xxx.0004	153
6065.xxx.Suffix	146
6066.xxx.Suffix	144
6070.xxx.Suffix	149
6075.xxx.Suffix	144
6080.xxx.0004	153
6091.xxx.0004	153
6100.xxx.Suffix	149
6110.xxx.0004	153
6110.xxx.Suffix	146
6130.xxx.Suffix	146
6150.xxx	150
6150.xxx.0004	153
6150.xxx.0084	153
6160.xxx	150
6301.xxx.0004	153
6301.xxx.0084	153
6301.xxx.Suffix	144
6310.xxx.0004	153
6310.xxx.0084	153
6310.xxx.Suffix	144
6315.xxx.Suffix	149
6318.xxx.0004	153
6318.xxx.0084	153
6318.xxx.Suffix	146
6320.xxx.Suffix	144
6321.xxx.Suffix	144
6325.xxx.Suffix	144
6338.xxx.XXXX	152
6339.xxx.XXXX	152
6340.xxx	152
6340.xxx.R(.L)	152
6341.xxx	152
6341.xxx.R(.L)	152
6375.xxx.Suffix	144
6401.xxx.BISX	70
6401.xxx.BLENT	70
6401.xxx.BLFD	70
6401.xxx.BOS	70
6401.xxx.BRENT	70
6401.xxx.BRFD	70
6401.xxx.ENTR	70
6401.xxx.FD	70
6401.xxx.ISFDX	70
6401.xxx.OSFD	70
6401.xxx.RENT(.LENT)	70
6401.xxx.LFD	70
6401.xxx.RFD	70
6402.xxx.BENTR	67
6402.xxx.BFD	67
6402.xxx.BISX	67
6402.xxx.BLENT	67
6402.xxx.BLFD	67
6402.xxx.BOS	67
6402.xxx.BRENT	67
6402.xxx.BRFD	67
6402.xxx.ISFDX	67
6402.xxx.OSFD	67
6402.xxx.ENTR	67
6402.xxx.FD	67
6402.xxx.RENT(.LENT)	67
6402.xxx.RFD(.LFD)	67
6403.xxx.BENTR	69
6403.xxx.BFD	69
6403.xxx.BISX	69
6403.xxx.BLENT	69
6403.xxx.BLFD	69
6403.xxx.BOS	69
6403.xxx.BRENT	69
6403.xxx.BRFD	69
6403.xxx.ISFDX	69
6403.xxx.ENTR	69
6403.xxx.FD	69
6403.xxx.OSFD	69
6403.xxx.RENT(.LENT)	69
6403.xxx.RFD(.LFD)	69
6420.xxx.ENTR	68
6420.xxx.FD	68
6426.xxx.BISX	72
6426.xxx.BLENT	72
6426.xxx.BLFD	72
6426.xxx.BOS	72
6426.xxx.BRENT	72
6426.xxx.BRFD	72
6426.xxx.ISFDX	72
6426.xxx.OSFD	72
6426.xxx.RENT(.LENT)	72
6426.xxx.LFD	72
6426.xxx.RFD	72
6501.000.A	140
6501.000.B	140
6501.000.C	140
6501.000.D	140
6501.000.E	140
6501.000.F	140
6501.xxx.15A	141
6501.xxx.15B	141
6501.xxx.15C	141
6501.xxx.15D	141
6501.xxx.15E	141
6501.xxx.15G	141
6501.xxx.15H	141
6501.xxx.15I	141
6501.xxx.15J	141
6501.xxx.15L	141
6501.xxx.15M	141
6501.xxx.15N	141
6501.xxx.15O	141
6502.009	51
6502.xxx.KCOS(KCIS)	125
6502.xxx.KEOS(KEIS)	125
6502.xxx.KNOS(KNIS)	125
6502.xxx.KTOS(KTIS)	125
6505.xxx.RKC(LKC)	139
6505.xxx.RKE(LKE)	139
6505.xxx.RKN(LKN)	139
6505.xxx.RKT(LKT)	139
6506.xxx.KCOS(KCIS)	122
6506.xxx.KEOS(KEIS)	122
6506.xxx.KNOS(KNIS)	122
6506.xxx.KP	122
6506.xxx.KTOS(KTIS)	122
6508.xxx.KC	137
6508.xxx.KN	137
6508.xxx.KP	137
6513.xxx.K	107
6513.xxx.K	107
6513.xxx.K	107
6513.xxx.KP	107
6513.xxx.KT	107
6514.xxx.KT	127
6525.xxx.KC	123
6525.xxx.KE	123
6525.xxx.KN	123
6525.xxx.KT	123
6526.xxx.ENFD	123
6526.xxx.RDBL(LDBL)	123
6526.xxx.RENT(LENT)	123
6526.xxx.RFD(LFD)	123
6530.xxx.KCOS	133
6530.xxx.KEOS	133
6530.xxx.KNOS	133
6530.xxx.KTOS	133
6530.xxx.KCIS	133
6530.xxx.KEIS	133
6530.xxx.KNIS	133
6530.xxx.KTIS	133
6535.xxx.KCOS (KCIS)	120
6535.xxx.KEOS (KEIS)	120
6535.xxx.KNOS (KNIS)	120
6535.xxx.KTIS	120
6542.xxx.DBLC	136
6542.xxx.ENFD	136
6542.xxx.ENTR	136
6542.xxx.FD	136
6544.xxx.ENFD	119
6544.xxx.RDBL(LDBL)	119
6544.xxx.RENT(LENT)	119
6544.xxx.RFD(LFD)	119
6547.xxx.DBLC	128
6547.xxx.DM	128
6547.xxx.ENFD	128
6547.xxx.ENTR	128
6547.xxx.FD	128
6549.xxx.ENFD	139
6549.xxx.RDBL(LDBL)	139
6549.xxx.RENT(LENT)	139
6549.xxx.RFD(LFD)	139
6552.xxx.DBLC	108
6552.xxx.DM	108
6552.xxx.ENFD	108
6552.xxx.ENTR	108
6552.xxx.FD	108
6553.xxx	125
6553.xxx.BB30	125
6553.xxx.BB75	125
6553.xxx.BBFD	125
6553.xxx.DM	125
6554.xxx.DBLC	109
6554.xxx.DM	109
6554.xxx.ENFD	109
6554.xxx.ENTR	109
6554.xxx.FD	109
6560.xxx.DBLC	126
6560.xxx.ENFD	126
6560.xxx.ENTR	126

6560.xxx.FD	126
6567.xxx.DBLC	137
6567.xxx.ENFD	137
6567.xxx.ENTR	137
6567.xxx.FD	137
6570.xxx.DBLC	107
6570.xxx.ENFD	107
6570.xxx.ENTR	107
6570.xxx.FD	107
6571.xxx.DBLC	117
6571.xxx.ENFD	117
6571.xxx.ENTR	117
6571.xxx.FD	117
6573.xxx.DBLC	135
6573.xxx.ENFD	135
6573.xxx.ENTR	135
6573.xxx.FD	135
6599.xxx.THKA	140
6599.xxx.THKB	140
6599.xxx.THKC	140
6599.xxx.THKD	140
6599.xxx.THKE	140
6599.xxx.THKF	140
6599.xxx.THKG	140
6599.xxx.THKH	140
6599.xxx.THKI	140
6599.xxx.THKJ	140
6599.xxx.THKK	140
6599.xxx.THKL	140
6602.xxx	137
6602.xxx.DM	137
6604.xxx	117
6604.xxx.DM	117
6605.xxx	136
6605.xxx.BB30	136
6605.xxx.BB75	136
6605.xxx.BBFD	136
6605.xxx.DM	136
6615.xxx.DM	129
6616.xxx.DM	130
6619.xxx	107
6619.xxx.BB30	107
6619.xxx.BB75	107
6619.xxx.DM	107
6620.xxx	127
6620.xxx.BB30	127
6620.xxx.BB75	127
6620.xxx.BBFD	127
6620.xxx.DM	127
6621.xxx	126
6621.xxx.BB30	126
6621.xxx.BB75	126
6621.xxx.BBFD	126
6621.xxx.DM	126

6622.xxx	119
6622.xxx.BB30	119
6622.xxx.BB75	119
6622.xxx.BBFD	119
6622.xxx.DM	119
6624.xxx	124
6624.xxx.BB30	124
6624.xxx.BB75	124
6624.xxx.BBFD	124
6624.xxx.DM	124
6628.xx	135
6628.xxx.BB3	135
6628.xxx.BB7	135
6628.xxx.BBF	135
6628.xxx.D	135
6641.xxx	131
6641.xxx.BB30	131
6641.xxx.BB75	131
6641.xxx.BBFD	131
6641.xxx.DM	131
6643.xxx	123
6643.xxx.DM	123
6652.xxx	118
6652.xxx.BB30	118
6652.xxx.BB75	118
6652.xxx.BBFD	118
6652.xxx.DM	118
6690.xxx	132
6690.xxx.BB75	132
6690.xxx.BBFD	132
6690.xxx.DM	132
6701.xxx	58
6703.xxx	58
6707.009	162
6709.xxx.KC	132
6709.xxx.KE	132
6709.xxx.KN	132
6709.xxx.KT	132
6714.xxx.KC	131
6714.xxx.KE	131
6714.xxx.KN	131
6714.xxx.KT	131
6715.xxx.KC	129
6715.xxx.KE	129
6715.xxx.KN	129
6715.xxx.KT	129
6720.xxx	57
6721.xxx	57
6722.xxx	57
6724.xxx	57
6725.xxx	57
6728.xxx	56
6729.xxx	57
6732.xxx	56

6733.xxx	56
6735.xxx	57
6737.xxx	157
6738.xxx	157
6739.xxx	157
6743.xxx	157
6748.xxx.A	59
6749.xxx.A	59
6750.xxx	56
6751.xxx	56
6754.xxx	157
6755.xx	157
6755.xxx.00	157
6755.xxx.00	157
6755.xxx.00	157
6756.xxx	56
6757.xxx	157
6760.xxx	56
6761.xxx	157
6762.xxx	56
6764.xxx	56
6765.xxx.KC	137
6765.xxx.KE	137
6765.xxx.KN	137
6765.xxx.KT	137
6767.xxx.KC	108
6767.xxx.KE	108
6767.xxx.KN	108
6766.xxx	56
6767.xxx.KP	108
6767.xxx.KT	108
6768.xxx	157
6789.xxx.KC	118
6789.xxx.KE	118
6789.xxx.KN	118
6789.xxx.KP	118
6789.xxx.KT	118
6790.xxx.KC	124
6790.xxx.KE	124
6790.xxx.KN	124
6790.xxx.KP	124
6790.xxx.KT	124
6791.xxx.KC	119
6791.xxx.KE	119
6791.xxx.KN	119
6791.xxx.KT	119
6793.xxx.KC	128
6793.xxx.KE	128
6793.xxx.KN	128
6793.xxx.KP	128
6793.xxx.KT	128
6794.xxx.KC	117
6794.xxx.KE	117
6794.xxx.KN	117

6794.xxx.KT	117
6795.xxx.KC	126
6795.xxx.KE	126
6795.xxx.KN	126
6795.xxx.KT	126
6796.xxx.KC	136
6796.xxx.KE	136
6796.xxx.KN	136
6796.xxx.KP	136
6796.xxx.KT	136
6798.xxx.KC	135
6798.xxx.KE	135
6798.xxx.KN	135
6798.xxx.KP	135
6798.xxx.KT	135
6800.xxx.0004	153
6800.xxx.0084	153
6800.xxx.Suffix	144
6802.xxx.Suffix	144
6810.xxx.0004	153
6810.xxx.0084	153
6810.xxx.Suffix	144
6812.xxx.Suffix	144
6832.xxx.Suffix	144
6845.xxx.Suffix	149
6847.xxx.Suffix	149
6850.xxx	150
6855.xxx.0004	153
6855.xxx.0084	153
6855.xxx.Suffix	149
6857.xxx.Suffix	149
6860.xxx	150
6897.xxx	153
6915.xxx.ENTR	133
6915.xxx.DBLC	133
6915.xxx.FD	133
6915.xxx.ENFD	133
6915.xxx.RDM(LDM)	133
6920.xxx.RENT(LENT)	129
6920.xxx.RDBL(LDBL)	129
6920.xxx.RFD(LFD)	129
6920.xxx.ENFD	129
6921.xxx.RENT(LENT)	130
6921.xxx.RDBL(LDBL)	130
6921.xxx.RFD(LFD)	130
6921.xxx.ENFD	130
6933.xxx.DBLC	138
6933.xxx.ENFD	138
6933.xxx.ENTR	138
6933.xxx.FD	138
6933.xxx.RDM(LDM)	138
6942.xxx.DBLC	111
6942.xxx.ENFD	111
6942.xxx.ENTR	111

6942.xxx.FD	111
6942.xxx.RDM(LDM)	111
6944.xxx.ENFD	131
6945.xxx.ENTR	121
6945.xxx.DBLC	121
6945.xxx.FD	121
6945.xxx.ENFD	121
6946.xxx.ENTR	120
6946.xxx.DBLC	120
6946.xxx.FD	120
6946.xxx.ENFD	120
6948.xxx.ENFD	138
6948.xxx.RDBL(LDBL)	138
6948.xxx.RENT(LENT)	138
6948.xxx.RFD(LFD)	138
6950.xxx.ENFD	124
6950.xxx.RDBL(LDBL)	124
6950.xxx.RENT(LENT)	124
6950.xxx.RFD(LFD)	124
6952.xxx.ENFD	118
6952.xxx.RDBL(LDBL)	118
6952.xxx.RENT(LENT)	118
6952.xxx.RFD(LFD)	118
6956.xxx	138
6956.xxx.DM	138
6961.xxx.DBLC	124
6961.xxx.DM	124
6961.xxx.ENFD	124
6961.xxx.ENTR	124
6961.xxx.FD	124
6962.xxx.DBLC	118
6962.xxx.DM	118
6962.xxx.ENFD	118
6962.xxx.ENTR	118
6962.xxx.FD	118
6963.xxx.RENT(LENT)	114
6963.xxx.RFD(LFD)	114
6966.xxx.ENFD	125
6966.xxx.RDBL(LDBL)	125
6966.xxx.RENT(LENT)	125
6966.xxx.RFD(LFD)	125
6973.xxx.DBLC	122
6973.xxx.ENFD	122
6973.xxx.ENTR	122
6973.xxx.FD	122
6973.xxx.RDM(LDM)	122
6974.xxx.DBLC	125
6974.xxx.ENFD	125
6974.xxx.ENTR	125
6974.xxx.FD	125
6974.xxx.RDM(LDM)	125
6976.xxx.ENFD	127
6976.xxx.RDBL(LDBL)	127
6976.xxx.RENT(LENT)	127

6976.xxx.RFD(LFD)	127
6986.xxx.KC	111
6986.xxx.KE	111
6986.xxx.KN	111
6986.xxx.KT	111
6991.xxx.KC	109
6991.xxx.KE	109
6991.xxx.KN	109
6991.xxx.KP	109
6991.xxx.KT	109
6993.xxx.KC	138
6993.xxx.KE	138
6993.xxx.KN	138
6993.xxx.KT	138
6999.xxx.ENFD	132
6999.xxx.RDBL(LDBL)	132
6999.xxx.RENT(LENT)	132
6999.xxx.RFD(LFD)	132
8000.849.STR3	219
8000.xxx.RSTR	219
8000.xxx.STR	219
8011.028.0025	162
8011.039.0023	162
8011.039.0027	162
8011.109.0022	162
8011.xxx	214
8011.xxx.0020	219
8011.xxx.KD12	219
8021.xxx	215
8030.xxx.0003	219
8030.xxx.0005	219
8030.xxx.0510	219
8031.xxx	215
8031.xxx.KD12	219
8031.xxx.KD22	219
8040.xxx.0004	219
8040.xxx.0006	219
8040.xxx.0510	219
8041.xxx	214
8053.028.TP1	162
8053.028.TP2	162
8053.028.TP3	162
8053.028.TP4	162
8053.xxx.TP525	219
8080.xxx	220
8090.xxx	220
8097.xxx	220
8098.xxx.DC03	220
8098.xxx.TP03	220
8105.xxx.7TOP	207
8105.xxx.8TOP	207
8105.xxx.GD	207
8105.xxx.R510/L510	207
8105.xxx.R7LK(L7LK)	207
8105.xxx.R8LK(L8LK)	207
8105.xxx.REPL	207
8106.xxx.CVR	207
8106.xxx.E24	207
8106.xxx.E48	207
8107.xxx.CVR	207
8107.xxx.E24	207
8107.xxx.E48	207
8201.xxx.DB	219
8208.xxx.DB	219
8220.xxx	94
8220.xxx.B	94
8220.xxx.BIS	94
8220.xxx.BOS	94
8221.xxx	213
8225.xxx	99
8225.xxx.ZW	99
8231.xxx	94
8231.xxx.B	94
8231.xxx.BIS	94
8231.xxx.BOS	94
8231.xxx.PAT	94
8232.xxx	215
8235.xxx	98
8235.xxx.ZW	98
8237.xxx	215
8237.xxx.0510	219
8238.xxx	215
8241.xxx	214
8241.xxx.PAT	214
8242.xxx	214
8244.xxx	213
8244.xxx.PAT	213
8250.xxx	214
8251.xxx	214
8252.xxx	94
8252.xxx.B	94
8252.xxx.BIS	94
8252.xxx.BOS	94
8252.xxx.AC1	94
8253.xxx	216
8254.xxx	216
8255.xxx	216
8285.xxx	211
8285.xxx.AC1	211
8286.xxx	217
8297.xxx	220
8300.009.0065	156
8300.009.0066	156
8300.109.005	156
8300.509.004	162
8300.509.AR	156
8300.509.EMHT	156
8300.509.STD	156
8300.xxx	157
8313.329.TPH	156
8313.329.TPH	156
8313.509.008	162
8313.509.009	162
8314.xx	157
8320.009.101	162
8320.009.102	162
8320.009.103	162
8320.009.202	162
8320.009.203	162
8320.009.204	162
8320.009.205	162
8320.009.206	162
8320.009.207	162
8320.009.208	162
8320.009.209	162
8320.152.300	162
8320.152.301	162
8320.152.302	162
8320.152.303	162
8320.152.304	162
8320.152.305	162
8320.152.306	162
8320.152.307	162
8320.152.308	162
8320.152.309	162
8320.152.401	162
8321.xxx	155
8321.xxx.DBL	155
8322.xxx	155
8322.xxx.DBL	155
8323.xxx	155
8323.xxx.DBL	155
8324.xxx	155
8324.xxx.DBL	155
8325.xxx	155
8325.xxx.DBL	155
8326.xxx	155
8326.xxx.DBL	155
8327.xxx	155
8327.xxx.DBL	155
8328.xxx	155
8328.xxx.DBL	155
8329.xxx	155
8329.xxx.DBL	155
8330.xxx	155
8330.xxx.DBL	155
8333.009.007	162
8333.009.010	162
8333.xxx	159
8333.xxx.H	159
8440.xxx.001	155
8440.xxx.002	155
8440.xxx.003	155
8440.xxx.004	155
8440.xxx.005	155
8440.xxx.006	155
8441.xxx	156
8442.xxx	156
8443.xxx	156
8444.xxx	156
8471.000.	162
8472.000.	162
8472.000.001	162
8472.000.002	162
8472.000.003	162
8472.000.004	162
8472.000.006	162
8474.000	162
8475.000.001	162
8480.000	162
8481.509.0110	60
8484.000.	162
8490.xxx.RCS	244
8498	156
8520.xxx	167
8520.xxx.0004	167
8525.xxx	167
8525.xxx.0004	167
8530.xxx.Suffix	148
8535.xxx.Suffix	148
8540.xxx.Suffix	148
8545.xxx.Suffix	148
8555.xxx	150
8560.xxx	150
9940.000.A	162
85305.xxx.ACLH (.ACRH)	68
85305.xxx.DBLC	68
85305.xxx.BENTR	68
85305.xxx.BISX	68
85305.xxx.BLENT	68
85305.xxx.BLFD	68
85305.xxx.BOS	68
85305.xxx.BRENT	68
85305.xxx.BRFD	68
85305.xxx.ENTR	68
85305.xxx.FD	68
85305.xxx.ISFDX	68
85305.xxx.OSFD	68
85305.xxx.RDBL(.LDBL)	68
85305.xxx.RENT(.LENT)	68
85305.xxx.RFD(.LFD)	68
85306.xxx.RENT (.LENT)	100
85306.xxx.ZWRENT (.ZWLENT)	100
85306.xxx.RFD(.LFD)	100
85310.xxx.DBLC	71
85310.xxx.ENTR	71
85310.xxx.FD	71
85310.xxx.ENTRX	71
85310.xxx.FDX	71
85311.xxx.BISX	71
85311.xxx.BENTR	71
85311.xxx.BFD	71
85311.xxx.BOS	71
85311.xxx.ISFDX	71
85311.xxx.OSFD	71
85311.xxx.ENTR	71
85311.xxx.FD	71
85311.xxx.ENTRX	71
85311.xxx.FDX	71
85315.xxx.DBLC	73
85315.xxx.ENTR	73
85315.xxx.FD	73
85315.xxx.RDBL(.LDBL)	73
85315.xxx.RENT(.LENT)	73
85315.xxx.RFD(.LFD)	73
85320.xxx.DBLC	74
85320.xxx.ENTR	74
85320.xxx.FD	74
85320.xxx.RDBL(.LDBL)	74
85320.xxx.RENT(.LENT)	74
85320.xxx.RFD(.LFD)	74
85327.xxx.DBLC	65
85327.xxx.ENTR	65
85327.xxx.FD	65
85327.xxx.RDBL(.LDBL)	65
85327.xxx.RENT(.LENT)	65
85327.xxx.RFD(.LFD)	65
85335.xxx.DBLC	73
85335.xxx.ENTR	73
85335.xxx.FD	73
85337.xxx.BENTR	66
85337.xxx.BFD	66
85337.xxx.BISX	66
85337.xxx.BLENT	66
85337.xxx.BLFD	66
85337.xxx.BOS	66
85337.xxx.BRENT	66
85337.xxx.BRFD	66
85337.xxx.ISFDX	66
85337.xxx.OSFD	66
85337.xxx.ENTR	66
85337.xxx.FD	66
85337.xxx.RENT(.LENT)	66
85337.xxx.RFD(.LFD)	66
85345.xxx.2DC	72
85345.xxx.2DCR(.2DCL)	72
85345.xxx.2ENT	72
85345.xxx.2FD	72
85345.xxx.2RFD(.2LFD)	72

85345.xxx.2RH(.2LH) 72
8535.xxx.Suffix 148
85350.xxx.BISX 74
85350.xxx.BLENT 74
85350.xxx.BLFD 74
85350.xxx.BOS 74
85350.xxx.BRENT 74
85350.xxx.BRFD 74
85350.xxx.ISFDX 74
85350.xxx.OSFD 74
85350.xxx.ENTR 74
85350.xxx.FD 74
85350.xxx.RENT(.LENT) 74
85350.xxx.RFD(.LFD) 74
85352.xxx.BENTR 69
85352.xxx.BFD 69
85352.xxx.BISX 69
85352.xxx.BLENT 69
85352.xxx.BLFD 69
85352.xxx.BOS 69
85352.xxx.BRENT 69
85352.xxx.BRFD 69
85352.xxx.ENTR 69
85352.xxx.FD 69
85352.xxx.ISFDX 69
85352.xxx.OSFD 69
85352.xxx.RENT(.LENT) 69
85352.xxx.RFD(.LFD) 69
85353.xxx.ACLH 95
85353.xxx.ACRH 95
85353.xxx.ACX 95
85353.xxx.ACRH(. 85
ACLH) 211
85353.xxx.BISX 85
85353.xxx.BLENT 85
85353.xxx.BLFD 85
85353.xxx.BRENT 85
85353.xxx.BRFD 85
85353.xxx.BOS 85
85353.xxx.ISFDX 85
85353.xxx.OSFD 85
85354.xxx.BENTR 67
85354.xxx.BFD 67
85354.xxx.BISX 67
85354.xxx.BLENT 67
85354.xxx.BLFD 67
85354.xxx.BOS 67
85354.xxx.BRENT 67
85354.xxx.BRFD 67
85354.xxx.ISFDX 67
85354.xxx.OSFD 67
85354.xxx.ENTR 67
85354.xxx.FD 67
85354.xxx.RENT(.LENT) 67
85354.xxx.RFD(.LFD) 67
85355.xxx.BISX 79
85355.xxx.BLENT 79
85355.xxx.BLFD 79
85355.xxx.BOS 79
85355.xxx.BRENT 79
85355.xxx.BRFD 79
85355.xxx.ISFDX 79
85355.xxx.OSFD 79
85355.xxx.ENTR 79
85355.xxx.FD 79
85355.xxx.RENT(.LENT) 79
85355.xxx.RFD(.LFD) 79
85358.xxx.RENT (.LENT) 100
85358.xxx.ZWRENT (.ZWLENT) 100
85358.xxx.RFD(.LFD) 100
85360.xxx.BENTR 66
85360.xxx.BFD 66
85360.xxx.BISX 66
85360.xxx.BOS 66
85360.xxx.ISFDX 66
85360.xxx.OSFD 66
85360.xxx.ENTR 66
85360.xxx.FD 66
85365.xxx.2DC 65
85365.xxx.2DCR(.2DCL) 65
85365.xxx.2ENT 65
85365.xxx.2FD 65
85365.xxx.2RFD(.2LFD) 65
85365.xxx.2RH(.2LH) 65
85385.xxx.2DCR(.2DCL) 79
85385.xxx.2RFD(.2LFD) 79
85385.xxx.2RH(.2LH) 79
85386.xxx.ACRH(.ACLH) 78
85386.xxx.RDBL(.LDBL) 78
85386.xxx.RENT(.LENT) 78
85386.xxx.RFD(.LFD) 78
85387.xxx.BISX 78
85387.xxx.BLENT 78
85387.xxx.BLFD 78
85387.xxx.BOS 78
85387.xxx.BRENT 78
85387.xxx.BRFD 78
85387.xxx.ISFDX 78
85387.xxx.OSFD 78
85387.xxx.RENT(.LENT) 78
85387.xxx.RFD(.LFD) 78
85390.xxx.ACLH 75
85390.xxx.ACRH 75
85390.xxx.ACX 75
85390.xxx.BISX 75
85390.xxx.BLENT 75
85390.xxx.BLFD 75
85390.xxx.BOS 75
85390.xxx.BRENT 75
85390.xxx.BRFD 75
85390.xxx.ISFDX 75
85390.xxx.OSFD 75
85390.xxx.LENT 75
85390.xxx.RENT 75
85390.xxx.RFD 75
85390.xxx.LFD 75
85390.xxx.ENTRX 75
85390.xxx.FDX 75
85391.xxx.BISX 75
85391.xxx.BLENT 75
85391.xxx.BLFD 75
85391.xxx.BOS 75
85391.xxx.BRENT 75
85391.xxx.BRFD 75
85391.xxx.ISFDX 75
85391.xxx.OSFD 75
85391.xxx.RENT 75
85391.xxx.LENT 75
85391.xxx.RFD 75
85391.xxx.LFD 75
85391.xxx.ENTRX 75
85391.xxx.FDX 75
85392.xxx.BISX 76
85392.xxx.BLENT 76
85392.xxx.BLFD 76
85392.xxx.BOS 76
85392.xxx.BRENT 76
85392.xxx.BRFD 76
85392.xxx.ISFDX 76
85392.xxx.LENT 76
85392.xxx.OSFD 76
85392.xxx.RENT 76
85392.xxx.RFD 76
85392.xxx.LFD 76
85392.xxx.ENTRX 76
85392.xxx.FDX 76
85393.xxx.RENT (.LENT) 101
85393.xxx.ZWRENT (.ZWLENT) 101
85393.xxx.RFD (.LFD) 101
85395.xxx.RENT 76
85395.xxx.LENT 76
85395.xxx.RFD 76
85395.xxx.LFD 76
85395.xxx.ENTRX 76
85395.xxx.FDX 76
85396.xxx.BISX 77
85396.xxx.BLENT 77
85396.xxx.BLFD 77
85396.xxx.BOS 77
85396.xxx.BRENT 77
85396.xxx.BRFD 77
85396.xxx.ISFDX 77
85396.xxx.OSFD 77
85396.xxx.RENT 77
85396.xxx.LENT 77
85396.xxx.RFD 77
85396.xxx.LFD 77
85396.xxx.ENTRX 77
85396.xxx.FDX 77
85397.xxx.BISX 77
85397.xxx.BLENT 77
85397.xxx.BLFD 77
85397.xxx.BOS 77
85397.xxx.BRENT 77
85397.xxx.BRFD 77
85397.xxx.ISFDX 77
85397.xxx.OSFD 77
85397.xxx.RENT 77
85397.xxx.LENT 77
85397.xxx.RFD 77
85397.xxx.LFD 77
85397.xxx.ENTRX 77
85397.xxx.FDX 77
8601.xxx. 175
8602.xxx. 175
8603.xxx. 175
8632.xxx. 175
90670.xxx.CD 226
90671.xxx.CD 226
90672.xxx.CD 226
90673.xxx.CD 226
90674.xxx.CD 226
90675.xxx.CD 226
90676.xxx.CD 226
90677.xxx.CD 226
90678.xxx.CD 226
90679.xxx.CD 226
G6010.xxx.Suffix 146
G6055.xxx.Suffix 146
G6060.xxx.Suffix 146
G6065.xxx.Suffix 146
G6075.xxx.Suffix 146
G6085.xxx.Suffix 146
G6090.xxx.Suffix 146
G6110.xxx.Suffix 146
G6130.xxx.Suffix 146
G6310.xxx.Suffix 146
G6318.xxx.Suffix 146
G6355.xxx.Suffix 146
G6360.xxx.Suffix 146
G6365.xxx.Suffix 146
G6375.xxx.Suffix 146
G6377.xxx.Suffix 146
G6385.xxx.Suffix 146
G6390.xxx.Suffix 146
K002.xxx.IMR 26
K002.xxx.MR 26
K003.xxx.IMR 26
K003.xxx.MR 26
K004.xxx.IMR 26
K004.xxx.MR 26
K005.xxx.IMR 26
K005.xxx.MR 26
K006.xxx.IMR 27
K006.xxx.MR 27
K007.xxx.IMR 27
K007.xxx.MR 27
K008.xxx.IMR 27
K008.xxx.MR 27
K009.xxx.IMR 27
K009.xxx.MR 27
K010.xxx.IMR 166
K010.xxx.MR 166
K011.xxx.IMR 166
K011.xxx.MR 166
L002.xxx.MR 34
L002.xxx.RMR(.LMR) 34
L004.xxx.MR 34
L004.xxx.RMR(.LMR) 34
L006.xxx.MR 35
L006.xxx.RMR(.LMR) 35
L015.xxx.MR 35
L015.xxx.MRPN 35
L015.xxx.RMR(.LMR) 35
L016.xxx.MR 35
L016.xxx.MRPN 35
L016.xxx.RMR(.LMR) 35
L018.xxx.MR 35
L018.xxx.MRPN 35
L018.xxx.RMR(.LMR) 35
L020.xxx.MR 35
L020.xxx.RMR(.LMR) 35
L021.xxx.MR 36
L021.xxx.RMR(.LMR) 36
L022.xxx.MR 36
L022.xxx.RMR(.LMR) 36
L023.xxx.MR 36
L023.xxx.RMR(.LMR) 36
L024.xxx.MR 36
L024.xxx.RMR(.LMR) 36
L025.xxx.MR 36
L025.xxx.RMR(.LMR) 36
L026.xxx.MR 166
L026.xxx.RMR(.LMR) 166
L027.xxx.MR 166
L027.xxx.RMR(.LMR) 166
L028.xxx.MR 166
L028.xxx.RMR(.LMR) 166

L029.xxx.MR	37
L029.xxx.RMR(.LMR)	37
MP000.000.AINS	182
MP000.000.AINT	182
MP000.000.FDPTP	182
MP000.000.FDPTQ	182
MP000.xxx.ACTA	186
MP000.xxx.ACTB	186
MP000.xxx.ACTC	186
MP000.xxx.ACTD	182
MP000.xxx.ACTE	182
MP000.xxx.ACTF	182
MP000.xxx.ACTG	182
MP000.XXX.ACTI	182
MP000.xxx.PATJ	182
MP000.xxx.PATK	182
MP000.xxx.PATL	182
MP000.xxx.PATM	182
MP000.xxx.PATO	182
M502.xxx.ENTR	115
M502.xxx.RENT(LENT)	115
M502.xxx.DBLC	115
M502.xxx.RDBL(LDBL)	115
M502.xxx.FD	115
M502.xxx.RFD (LF	115
M502.xxx.DM	115
M502.xxx.KC	115
M502.xxx.KE	115
M502.xxx.KN	115
M502.xxx.KT	115
M504.xxx.ENTR	116
M504.xxx.RENT(LENT)	116
M504.xxx.DBLC	116
M504.xxx.RDBL(LDBL)	116
M504.xxx.FD	116
M504.xxx.RFD(LFD	116
M504.xxx.DM	116
M504.xxx.KC	116
M504.xxx.KE	116
M504.xxx.KN	116
M504.xxx.KT	116
M512.xxx.ENTR	112
M512.xxx.RENT(LENT)	112
M512.xxx.DBLC	112
M512.xxx.RDBL(LDBL)	112
M512.xxx.FD	112
M512.xxx.RFD(LFD	112
M512.xxx.DM	112
M512.xxx.KC	112
M512.xxx.KE	112
M512.xxx.KN	112
M512.xxx.KT	112
M514.xxx.ENTR	113
M514.xxx.RENT(LENT)	113
M514.xxx.DBLC	113
M514.xxx.RDBL(LDBL)	113
M514.xxx.FD	113
M514.xxx.RFD(LFD	113
M514.xxx.DM	113
M514.xxx.KC	113
M514.xxx.KE	113
M514.xxx.KN	113
M514.xxx.KT	113
M522.xxx.ENTR	110
M522.xxx.RENT(LENT)	110
M522.xxx.DBLC	110
M522.xxx.RDBL(LDBL)	110
M522.xxx.FD	110
M522.xxx.RFD(LFD	110
M522.xxx.DM	110
M522.xxx.KC	110
M522.xxx.KE	110
M522.xxx.KN	110
M522.xxx.KT	110
PD005	171
PD006	172
PD007	173
PD016	174
R003.xxx.FD	43
R003.xxx.IDM	43
R003.xxx.IPS	43
R003.xxx.IPV	43
R003.xxx.PS	43
R003.xxx.PV	43
R004.xxx.FD	43
R004.xxx.IDM	43
R004.xxx.IPS	43
R004.xxx.IPV	43
R004.xxx.PS	43
R004.xxx.PV	43
R007.xxx.FD	43
R007.xxx.IDM	43
R007.xxx.IPS	43
R007.xxx.IPV	43
R007.xxx.PS	43
R007.xxx.PV	43
R008.xxx.FD	43
R008.xxx.IDM	43
R008.xxx.IPS	43
R008.xxx.IPV	43
R008.xxx.PS	43
R008.xxx.PV	43
R011.xxx.FD	43
R011.xxx.IDM	43
R011.xxx.IPS	43
R011.xxx.IPV	43
R011.xxx.PS	43
R011.xxx.PV	43
R012.xxx.FD	43
R012.xxx.IDM	43
R012.xxx.IPS	43
R012.xxx.IPV	43
R012.xxx.PS	43
R012.xxx.PV	43
R016.xxx.FD	44
R016.xxx.IDM	44
R016.xxx.IPS	44
R016.xxx.IPV	44
R016.xxx.PS	44
R016.xxx.PV	44
R017.xxx.FD	44
R017.xxx.IDM	44
R017.xxx.IPS	44
R017.xxx.IPV	44
R017.xxx.PS	44
R017.xxx.PV	44
R026.xxx.FD	44
R026.xxx.IDM	44
R026.xxx.IPS	44
R026.xxx.IPV	44
R026.xxx.PS	44
R026.xxx.PV	44
R027.xxx.FD	45
R027.xxx.IDM	45
R027.xxx.IPS	45
R027.xxx.IPV	45
R027.xxx.PS	45
R027.xxx.PV	45
R028.xxx.FD	45
R028.xxx.IDM	45
R028.xxx.IPS	45
R028.xxx.PS	45
R028.xxx.PV	45
R028.xxx.RPV(.LPV)	45
R029.xxx.EGRK	45
R029.xxx.EGRL	45
R029.xxx.ENTR	45
R029.xxx.FD	45
R029.xxx.IDM	45
R029.xxx.IPS	45
R029.xxx.PS	45
R029.xxx.PV	45
R029.xxx.RPV(.LPV)	45
R030.xxx.FD	46
R030.xxx.IDM	46
R030.xxx.IPS	46
R030.xxx.IPV	46
R030.xxx.PS	46
R030.xxx.PV	46
R031.xxx.FD	46
R031.xxx.IDM	46
R031.xxx.IPS	46
R031.xxx.PS	46
R031.xxx.PV	46
R031.xxx.RPV(.LPV)	46
R032.xxx.EGRK	46
R032.xxx.EGRL	46
R032.xxx.ENTR	46
R032.xxx.FD	46
R032.xxx.IDM	46
R032.xxx.IPS	46
R032.xxx.PS	46
R032.xxx.PV	46
R032.xxx.RPV(.LPV)	46
R033.xxx.FD	46
R033.xxx.IDM	46
R033.xxx.IPS	46
R033.xxx.IPV	46
R033.xxx.PS	46
R033.xxx.PV	46
R034.xxx.FD	46
R034.xxx.IDM	46
R034.xxx.IPS	46
R034.xxx.PS	46
R034.xxx.PV	46
R034.xxx.RPV(.LPV)	46
R035.xxx.EGRK	46
R035.xxx.EGRL	46
R035.xxx.ENTR	46
R035.xxx.FD	46
R035.xxx.IDM	46
R035.xxx.IPS	46
R035.xxx.PS	46
R035.xxx.PV	46
R035.xxx.RPV(.LPV)	46
R036.xxx.FD	47
R036.xxx.IDM	47
R036.xxx.IPS	47
R036.xxx.IPV	47
R036.xxx.PS	47
R036.xxx.PV	47
R037.xxx.FD	47
R037.xxx.IDM	47
R037.xxx.IPS	47
R037.xxx.PS	47
R037.xxx.PV	47
R037.xxx.RPV(.LPV)	47
R038.xxx.ENTR	47
R038.xxx.FD	47
R038.xxx.IDM	47
R038.xxx.IPS	47
R038.xxx.PS	47
R038.xxx.PV	47
R038.xxx.RPV(.LPV)	47
R045.xxx.PS	47
R045.xxx.FD	47
R045.xxx.IPS	47
R045.xxx.IDM	47
R045.xxx.PV	47
R045.xxx.IPV	47
R046.xxx.PS	47
R046.xxx.FD	47
R046.xxx.IPS	47
R046.xxx.IDM	47
R046.xxx.PV	47
R046.xxx.RPV(.LPV)	47
R047.xxx.PS	47
R047.xxx.FD	47
R047.xxx.IPS	47
R047.xxx.IDM	47
R047.xxx.PV	47
R047.xxx.RPV(.LPV)	47
R047.xxx.ENTR	47
R047.xxx.EGRK	47
R047.xxx.EGRL	47
R048.xxx.PS	48
R048.xxx.FD	48
R048.xxx.IPS	48
R048.xxx.IDM	48
R048.xxx.PV	48
R048.xxx.RPV(.LPV)	48
R048.xxx.ENTR	48
R048.xxx.EGRK	48
R048.xxx.EGRL	48
SD004.xxx.KT	165
SD004.xxx.KN	165
SD004.xxx.PS	165
SD004.xxx.PV	165
SD005.xxx.KT	165
SD005.xxx.KN	165
SD005.xxx.PS	165
SD005.xxx.PV	165
SD015.xxx.KT	165
SD015.xxx.KN	165
SD015.xxx.PS	165
SD015.xxx.PV	165
SD016.xxx.KT	165
SD016.xxx.KN	165
SD016.xxx.PS	165
SD016.xxx.PV	165
TK001.xxx	57
TK004.xxx	57
TK007.xxx	57
U5510.xxx	50
U8201.xxx.DB	219
U8202.xxx.DB	219
U8208.xxx.DB	219
U8209.xxx.DB	219

ALPHABETICAL INDEX	PAGE
American Cylinder – See Multi–Point	
Armored Fronts	153
Back Plates	
Edinburgh	118
Cabinet Knob	256
Cabinet Pull Base	256
Bell Buttons	
Beaded	225
Oval	22
Rectangular	59
Round	16
Blocking Rings	155
Communicating Door Kit	61
Cremone Bolt	207
Cylinders	
Key Blanks	160
Lock Trim Thickness Index	156
Mortise Cylinders (Single & Double)	55
Rim Lock Cylinders	159
Cylinders - Accessories	
5–pin Cylinder Spring Covers	162
6–pin Cylinder Spring Covers	162
Adams Rite Cam	156
Cylinder Springs	162
Emhart Cam	156
Mortise Lock Turn Piece Cylinders	156
Residential Trim Marking Template Doors	156
Rim Cylinder Tailpieces	156
Standard Cam	156
Cylinders – C-Keyway Table	155
Cylinders – Cylinder Trim/Collars	
Beaded Cylinder Collar	157
Blocking Rings	155
Colonial Cylinder Collar	157
Compression Cylinder Collar	157
Contemporary Round Collar	157
Contemporary Square Collar	157
Cylinder Lock Cover Plate	157
Dummy Cylinder	157
Lakeshore Cylinder Collar	157
Oval Cylinder Collar	157
Square Cylinder Collar	157
Wrought Cylinder Collar	157
Deadbolts	
Arched	216
Bethpage	215
Contemporary	213,214
Soho	217
Squared	216
Traditional	215
Deadbolts - Accessories	219
Deadbolts - Conversion Kits	219
Deadbolts - Components	
Bethpage Turn Piece	219
Contemporary Inside Cylinder Collar	219
Contemporary Outside Cylinder Collar	219
Contemporary Turn Piece Assembly	219
Cyl. And Tail Piece–Egress Handlesets	219
Cylinder Cap Tool	219
Cylinder Tail Piece	219
Cyl. Threaded Sleeve–Mounting Dbl Cyl.	219
Deadbolt	
	219
Double Cylinder For Handlesets & Deadbolts	219
Pan Head Thru–Bolt	219
Traditional Inside Cylinder Collar	219
Traditional Outside Cylinder Collar	219
Traditional Turn Piece Assembly	219
Tumbler Springs	219
Turn Piece Tail Piece, Older Style Handleset	219
Deadbolts - Strikes	
Dust Box	219
Radius Corner Deadbolt Strike	219
Standard Security Deadbolt Strike	219
Deadbolts - Thick Door Kits	
For New Mechanics	220
For Original Mechanics	220
Deadbolts - Trim Rings & Collars	
Cylinder Collar Spacers	220
Double Cylinder Conv. Kit	220
Single Cylinder Conv. Kit	220
Trim Rings	220
Door Guards	
Security	227
Door Stops	
Base Mounted Door Bumpers	240
Concave Wall Bumpers	240
Convex Wall Bumpers	240
Floor Bumper	239
Half Dome Door Bumper	239
Lever Door Holder	240
Riser for Dome Bumper	239
Universal Floor Bumper	239
Dust Boxes	
For Deadbolt Latch	219
For Interior Tubular Lock (for 5510 Latch)	52
For Mortise Lock	153
Emergency Release Trim & Backplates	58
Edge Pulls	230
Entrance Trim (Mortise & Tubular)	
Ashton	65
Atlanta	107
Baltimore	108
Barclay	109
Bethpage Sectional	65
Bethpage	66
Bismark	111
Blakely	66
Boulder	67
Boulder ¾	67
Bristol (Tubular)	68
Bristol	114
Canterbury	68
Cody	69
Cody ¾	69
Concord	117
Devonshire	70
Edinburgh	118
Fenwick	118
Georgetown	139
Hamilton	119
Hollywood Hills	120
Hollywood Hills Knob	121
Hollywood Hills (Sectional)	71
Hollywood Hills (Full Tubular)	71
Houston	122
Kensington	123
Kensington	124
Kensington ¾ (Tubular)	72
Lakeshore	125
Lakeshore Lever	125
Landon	72
Lexington	126
Logan	73
Madison	74
Manchester	74
Minneapolis	127
Minneapolis (Sectional)	75
Minneapolis ¾ (Tubular)	75
Minneapolis (Full Tubular)	76
Nashville	128
Pasadena	131
Reading	137
Richland	132
Santa Monica	133
Soho	78
Soho ¾	78
Soho Two-Point	79
Springfield	129
Stanford	119
Stonegate	79
Tremont	136
Trenton	137
Versailles	138
Victoria	138
Westminster	124
Williamsburg	139
Wilmington	126
Evolved Deadbolts	
Arched (Evolved)	94
Contemporary (Evolved)	94
Traditional (Evolved)	94

Evolved Entrance Trims	
Bethpage (Evolved)	84
Blakely (Evolved)	84
Boulder ¾ (Evolved)	85
Boulder (Evolved)	86
Boulder Sectional (Evolved)	85
Canterbury Sectional (Evolved)	86
Cody ¾ (Evolved)	87
Cody (Evolved)	87
Devonshire (Evolved)	88
Hollywood Hills (Evolved)	88
Kensington (Evolved)	89
Manchester (Evolved)	89
Minneapolis ¾ (Evolved)	90
Minneapolis (Evolved)	91
Minneapolis Sectional (Evolved)	90
Palm Springs ¾ (Evolved)	91
Palm Springs (Evolved)	92
Soho (Evolved)	92
Stonegate (Evolved)	93
Flush Bolts & Strikes	
Dustproof Strike	233
Flush Bolts	233
Rabbeted Guide	233
Rabbeted Strike	233
Flush Rings	229
Hinges	
Ball Bearing	245
Radius Corner	244
Replacement Screws & Pins	242
Square Corner	243
How to Order & Installation	
Essentials	4
Dummy	6
Passage	7
Privacy	8
House Numbers	226
Installation Tools	
Aligning Bushing	60
Aligning Tool & Bushing	60
Socket Wrench	60
Spanner Tool	60
Keying - Kits & Components	
Bottom Pins	162
Top Pins	162
Master Pins	162
Adams Rite Cams	162
Cam mounting screws	162
Cap	162
Cap tool	162
Cylinder plug follower	162
Finish demonstrator	162
Hotel pin	162
Key gauge	162

Large keying kit for all (C)keying	162
Mounting plate	162
Mounting screws	162
Small keying kit	162
Spacer	162
Spring covers	162
Springs	162
Standard cams	162
Stile–right template	162
Tailpiece	162
Tumbler springs	162
Tweezers	162
Washer	162
Keyless Entry - Electronics	
Soho Deadbolt	211
Soho Sectional Handleset Kit	211
Boulder Deadbolt	211
Boulder Sectional Handleset Kit	211
Kickplates	234
Knobs - Cabinet	
Colonial	250
Couture	250
Crystal	248
Deco	248
Decorative Oval	251
Dominion	249
Edinburgh	250
Hollywood Hills	252
Melon	249
Ornamental	251
Oval	251
Palm Springs	251
Ring Deco	248
Rope	250
Severin Fayerman Collection	249
Spherical	251
Knobs - Interior A La Carte	
5000	21
5001	21
5005	21
5009	21
5011	21
5013	22
5015	22
5020	22
5023	22
5024	22
5025	23
5030	23
5041	23
5045	23
5050	23
5055	24
5057	24

5060	24
5064	24
5066	24
5067	25
5068	25
5069	25
5073	25
5077 Bethpage	25
5080 Filmore	26
K002	26
K003	26
K004	26
K005	26
K006	27
K007	27
K008	27
K009	27
K010	166
K011	166
Knobs - Interior Tubular Pre-Configured Sets	
5015 Classic	13
5020 Colonial	13
5025 Egg	13
5080 Filmore	13
Knobs - Tubular Keyed Entry	
Bethpage (5237/5238/5239/5241)	16
Classic (5205/5206/5208/5209)	15
Colonial (5210/5211/5213/5214)	15
Contemporary w/ Round Rose (5230/5231/5233/5234)	16
Contemporary w/ Square Rose (5250/5251/5253/5254)	16
Egg (5225/5226/5228/5229)	15
Modern (5215/5216/5218/5219)	15
5023 Knob (5275/5276/5278/5279))	15
Knockers	
"S"	224
Colonial	224
Colonial w/ Observascope	224
French	224
Imperial	224
Observ-O-Scope (doors <2.25" thick)	225
Observ-O-Scope (doors 2.25–3.25" thick)	225
Ring	225
Latches - Tubular	
Passage - Knob Strength	50
Passage - Lever Strength	50
Privacy - Knob Strength	50
Privacy - Lever Strength	50
Levers - Interior A La Carte	
5101	28
5103	28
5104	28
5105	28
5106	28

5107	29
5108	29
5112	29
5113	29
5116	29
5118	30
5121	30
5122	30
5125	30
5132	30
5137	31
5138	31
5141	31
5152	31
5161	31
5162	32
5164	32
5165	32
5166	32
5173	32
5190	33
5440V Colonial	33
5445V Classic	33
5447V Bethpage	33
5452V	33
5455V Wave	34
5460V Contemporary	34
5485V Soho	34
L002	34
L004	34
L006	35
L015	35
L016	35
L018	35
L020	35
L021	36
L022	36
L023	36
L024	36
L025	36
L026	166
L027	166
L028	166
L029	37
Levers - Interior Tubular Pre-Configured Sets	
5162	14
5445V Classic	14
5452V Bevertail	14
5455V Wave	14
5485V Soho	14
Levers - Tubular Keyed Entry	
Bethpage (5237/5238/5239/5241)	17
Classic (5245/5246/5248/5249)	18
Square w/ Round Rose (5260/5261/5263/5264)	17
Square w/ Square Rose (5285/5286/5288/5289)	17
Wave (v z v zvv /5256/5258/5259)	18
Misc - Replacement Parts	161
Mortise - Deadlocks	150
Mortise - European	
How to Order	193
Configuration 7 (72mm CTC)	195
Configuration 8 (85mm CTC)	197
Mortise Locks - Accessories	
Strikes	152,153
Armored Fronts	153
Mortise Locks - Electrical	151
Mortise Locks - Entrance Function	144
Mortise Locks - Grade 1, Light Duty Commercial	146
Mortise Locks - Interior, Heavy Duty	149
Mortise Locks - Interior, Small Case	148
Multi-Point	
Configuration 1 (Profile Cylinder Below Handle – 8 ½" CTC)	181
Configuration 2 (American Cylinder Above Handle – 8 ½" CTC)	183
Configuration 3 (American Cyl Below Handle – 8 3⁄8" CTC)	185
Configuration 4 (Profile Cylinder Below Handle – 7 7⁄8" CTC)	187
Configuration 5 (American Cyl Above/Below Handle – 7 9⁄16" CTC)	189
Configuration 6 (American Cylinder Above Handle – 7 ¼" CTC)	191
Pre-Drilled Door Accessories	
2 1⁄8" Pre-Drilled Door Adaptor	51
Dummy Insert & Filler Plate	54
Closet Spindles	59
Privacy	
Button - Knob Strength	51
Button Extender	51
Pull Plates	235
Pulls	
Atlanta	236
Bristol	235
Concord	237
Edinburgh	250
Empire	236
Hamilton	236
Kensington/Victoria	238
Lancaster/Charleston/Plymouth	238
Lexington	237
New York/Princeton/Richland	236
Pasadena	238
Renssalear	237
Richmond	236
Springfield	238
Tremont	236
Utility	236
Pulls - Appliance	257
Pulls - Cabinet	
Arch	253
Colonial	254
Couture Collection	253
Crystal	252
Cup	253
Deco	253
Dominion	254
Edinburgh	254
Hollywood Hills	255
Melon Cup	253
Oval	254
Palm Springs	255
Severin Fayerman Collection	252
Spindle	254
Wire	254
Push Plates	
Bristol	235
Nashville	234
San Francisco	235
Square Edge	234
Rim Locks	
Accessories	205
Entrance, Special Function	203
Passage, Privacy, Entrance	202
Rim Cylinders	159
Standards & Specifications	201
Trim	204
Roller & Ball Catches	
Adjustable Ball Catch	230
Adjustable Roller Catch	230
Roller Latch	230
Sash Locks & Pulls	
Flush Pull	231
Sash Lift	231
Sash Lock	231
Rosettes	
5002	38
5003	38
5004	38
5006	39
5010	39
5016	40
5017	38
5019	40
5021	40
5028	41
5032	39
5035	41
5038	41
5042	42
5046	39
5047	42
5048	38
5053	40

5056	42
5058	42
5062	40
5070	39
5075	41
5076	41
5078	41
5119	40
5123	39
5127	41
5129	41
5134	41
5139	39
5142	42
5145	40
5146	39
5147	42
5148	38
5149	38
5151	39
5153	40
5155	41
5156	41
5157	41
5158	42
5160	42
R003	43
R004	43
R007	43
R008	43
R011	43
R012	43
R016	44
R017	44
R026	44
R027	45
R028	45
R029	45
R030	46
R031	46
R032	46
R033	46
R034	46
R035	46
R036	47
R037	47
R038	47
R045	47
R046	47
R047	47
R048	48
R049	49
R050	49
R051	49

Screen Door Locks	164
Sliding Door Locks	170
Spare Parts	
Rose Retainers	49
Screw Bases	59
Screw Covers	59
Set Screw	51
Spindles	
Closet Spindles	59
Dummy Spindles	54
Broached Straight Spindles	53
Broached Swivel Spindles	53
Broached Half Spindles	53
Transitional Straight Spindles	53
Transitional Swivel Spindles	53
Transitional Half Spindles	53
Strikes	
Angle	206
ASA Extended Lip - Mortise	152
ASA Straight & Curved Lip - Mortise	152
ASA Strike - Tubular	52
Combination Privacy Strike - Tubular	52
Deadlock - Mortise	153
Extended Full Lip Strike - Tubular	52
Full Lip Strike - Tubular	52
Heavy Duty Angle	227
Mortise	227
Rabbeted Door - Mortise	153
Surface	227
Universal	227
Surface Bolts	227
Switchplates	
Beveled Edge	246
Colonial	247
Thin & Thick Door Kits	
Thick Door Mortise Kits	140
Thin Steel Door Mortise Kits	141
Thin Steel Door Tubular Kits	141
Tools & Accessories	162
Touchscreen	
Touchscreen Deadbolts	98
Touchscreen Handlesets	100
Tubular Entrance Sets - See Entrance Trim	
Tubular Deadbolts - See Deadbolts	
Tubular Keyed Entry Levers - See Levers - Tubular Keyed Entry	
Tubular Keyed Entry Levers - See Levers - Tubular Keyed Entry	
Tubular Keyed Entry Knobs - See Knobs - Tubular Keyed Entry	
Turn Knobs	57
Turn Pieces	56
UL Kits - Passage & Privacy Tubular	50

NEW BALDWIN QUICKSHIP PROGRAM

Quick Ship is designed to expedite shipping of the most popular styles, designs and finishes to customers. Nearly 1600 SKUs are available through this program, offering shipment of products within 3 days from order confirmation. Quick Ship program is available in limited functions and finishes. Below is the complete listing:

CABINET HARDWARE
4706.150.BIN
4706.260.BIN
4706.102.BIN
4706.030.BIN
4491.150.BIN
4706.140.BIN
4491.260.BIN
4635.050.BIN
4706.112.BIN
4491.102.BIN
4491.140.BIN
4704.150.BIN
4491.112.BIN
4424.150.BIN
4655.030.BIN
4704.102.BIN
4702.150.BIN
4708.102.BIN
4913.150.BIN
4456.150.BIN
4359.260
4358.260
4706.050.BIN
4491.030.BIN
4704.260.BIN
4453.260.BIN
4456.112.BIN
4423.102.BIN
4702.030.BIN
4708.030.BIN
4334.260.S
4480.150.BIN
4655.150.BIN
4931.030.BIN
4704.030.BIN
4456.140.BIN
4453.150.BIN
4704.140.BIN
4362.150.BIN
4480.102.BIN
4708.150.BIN
4424.102.BIN
4635.150.BIN
4362.260.BIN
4423.150.BIN
4655.260.BIN
4900.030.BIN
4913.030.BIN
4913.102.BIN
4362.112.BIN

4915.102.BIN
4491.050.BIN
4708.260.BIN
4676.150.BIN
4961.260.BIN
4362.140.BIN
4655.102.BIN
4913.260.BIN
4456.260.BIN
4902.030.BIN
4629.150.BIN
4386.112.BIN
4357.150.BIN
4702.260.BIN
4480.260.BIN
4302.260
4372.150.BIN
4613.260.BIN
4385.112.BIN
4960.260.BIN
4324.030
4902.150.BIN
4455.150.BIN
4913.140.BIN
4704.050.BIN
4645.030.BIN
4424.260.BIN
4446.112.BIN
4961.030.BIN
4645.260.BIN
4318.260
4476.260.BIN
4910.030.BIN
4674.150.BIN
4636.150.BIN
4493.150.BIN
4367.112.BIN
4343.260
4493.260.BIN
4446.260.BIN
4629.112.BIN
4392.150.BIN
4476.030.BIN
4702.102.BIN
4900.102.BIN
4612.112.BIN
4464.150.BIN
4377.112.BIN
4629.030.BIN
4931.050.BIN
4324.260
4655.140.BIN

4424.112.BIN
4708.112.BIN
4308.260
4704.112.BIN
4424.140.BIN
4479.150.BIN
4423.260.BIN
4453.140.BIN
4932.030.BIN
4493.102.BIN
4357.260.BIN
4660.030.BIN
4708.140.BIN
4438.112.BIN
4672.150.BIN
4423.112.BIN
4377.050.BIN
4964.030.BIN
4612.150.BIN
4301.260
4960.102.BIN
4349.030
4362.030.BIN
4356.150.BIN
4450.150.BIN
4479.050.BIN
4629.260.BIN
4900.140.BIN
4354.260
4493.050.BIN
4900.150.BIN
4367.150.BIN
4910.102.BIN
4636.112.BIN
4302.030
4377.150.BIN
4636.050.BIN
4384.260.BIN
4367.260.BIN
4357.112.BIN
4459.150.BIN
4967.150.BIN
4902.260.BIN
4900.260.BIN
4480.112.BIN
4497.150.BIN
4645.150.BIN
4453.112.BIN
4455.140.BIN
4446.150.BIN
4458.030.BIN
4423.140.BIN

4636.030.BIN
4391.150.BIN
4960.030.BIN
4915.260.BIN
4901.030.BIN
4915.150.BIN
4324.150
4387.112.BIN
4961.140.BIN
4446.030.BIN
4334.030.S
4636.260.BIN
4479.260.BIN
4336.030.S
4630.112.BIN
4645.112.BIN
4630.030.BIN
4645.050.BIN
4493.030.BIN
4646.030.BIN
4660.260.BIN
4349.260
4903.102.BIN
4382.260.BIN
4448.150.BIN
4447.150.BIN
4357.140.BIN
4479.102.BIN
4438.150.BIN
4964.150.BIN
4476.150.BIN
4961.150.BIN
4480.050.BIN
4655.050.BIN
4968.260.BIN
4372.260.BIN
4709.150.BIN
4915.112.BIN
4964.102.BIN
4635.260.BIN
4939.030.BIN
4371.150.BIN
4613.112.BIN
4660.112.BIN
4318.030
4903.030.BIN
4496.150.BIN
4494.102.BIN
4650.030.BIN
4437.150.BIN
4456.030.BIN
4446.140.BIN

4494.150.BIN
4446.102.BIN
4611.112.BIN
4931.112.BIN
4343.150
4464.260.BIN
4455.260.BIN
4424.050.BIN
4655.112.BIN
4903.150.BIN
4487.140.BIN
4438.030.BIN
4383.260.BIN
4308.030
4363.140
4343.030
4325.030
4674.102.BIN
4336.260.S
4489.102.BIN
4646.150.BIN
4373.150
4367.140.BIN
4902.102.BIN
4902.140.BIN
4910.150.BIN
4487.150.BIN
4939.150.BIN
4645.102.BIN
4372.112.BIN
4479.030.BIN
4480.030.BIN
4709.030.BIN
4487.030.BIN
4490.030.BIN
4613.030.BIN
4424.030.BIN
4931.102.BIN
4450.260.BIN
4301.030
4494.260.BIN
4660.050.BIN
4497.260.BIN
4446.050.BIN
4630.150.BIN
4676.260.BIN
4702.050.BIN
4487.102.BIN
4302.150
4709.102.BIN
4635.112.BIN
4611.030.BIN

4448.260.BIN
4476.102.BIN
4939.102.BIN
4334.112.S
4464.112.BIN
4672.260.BIN
4447.030.BIN
4488.050.BIN
4676.050.BIN
4447.260.BIN
4438.260.BIN
4989.030.BIN
4613.150.BIN
4964.260.BIN
4453.030.BIN
4612.030.BIN
4458.150.BIN
4325.260
4354.030
4900.050.BIN
4423.030.BIN
4674.260.BIN
4489.150.BIN
4437.050.BIN
4910.260.BIN
4902.112.BIN
4475.260.BIN
4464.102.BIN
4437.112.BIN
4354.150
4318.112
4377.030.BIN
4308.150
4459.030.BIN
4377.260.BIN
4324.112
4660.102.BIN
4487.112.BIN
4968.102.BIN
4334.150.S
4612.260.BIN
4672.102.BIN
4489.140.BIN
4480.140.BIN
4931.150.BIN
4497.112.BIN
4365.140
4900.112.BIN
4650.102.BIN
4660.150.BIN
4967.260.BIN
4390.150.BIN

4357.030.BIN
4423.050.BIN
4490.150.BIN
4363.030
4378.050
4361.112.BIN
4915.050.BIN
4966.050.BIN
4490.140.BIN
4458.050.BIN
4448.050.BIN
4378.030
4475.102.BIN
4475.050.BIN
4966.030.BIN
4611.150.BIN
4964.140.BIN
4676.030.BIN
4363.112
4325.150
4301.150
4476.050.BIN
4349.150
4376.150.BIN
4910.050.BIN
4361.150.BIN
4496.102.BIN
4913.112.BIN
4438.050.BIN
4960.150.BIN
4676.102.BIN
4932.150.BIN
4960.140.BIN
4489.050.BIN
4964.050.BIN
4363.260
4364.140
4356.260.BIN
4475.150.BIN
4368.112
4356.140.BIN
4488.102.BIN
4660.140.BIN
4437.102.BIN
4932.050.BIN
4489.112.BIN
4645.140.BIN
4496.260.BIN
4967.102.BIN
4318.150
4913.050.BIN
4964.112.BIN

4366.112.BIN
4915.140.BIN
4479.112.BIN
4372.050.BIN
4966.260.BIN
4361.140.BIN
4464.030.BIN
4447.102.BIN
4378.150
4459.102.BIN
4378.112
4494.030.BIN
4363.150
4437.260.BIN
4475.030.BIN
4630.260.BIN
4931.140.BIN
4374.150
4358.150
4301.112
4356.112.BIN
4672.030.BIN
4646.050.BIN
4373.050
4372.030.BIN
4635.030.BIN
4966.150.BIN
4488.260.BIN
4488.150.BIN
4488.140.BIN
4361.260.BIN
4650.050.BIN
4650.150.BIN
4459.112.BIN
4915.030.BIN
4376.050.BIN
4368.260
4437.030.BIN
4336.150.S
4903.260.BIN
4967.030.BIN
4458.260.BIN
4365.150
4384.150.BIN
4646.112.BIN
4365.260
4989.260.BIN
4489.260.BIN
4360.150
4488.030.BIN
4932.102.BIN
4376.030.BIN
4358.140
4349.112
4343.112

4448.102.BIN
4709.112.BIN
4447.112.BIN
4490.050.BIN
4496.050.BIN
4369.260
4901.260.BIN
4910.140.BIN
4364.150
4459.260.BIN
4438.102.BIN
4708.050.BIN
4488.112.BIN
4939.140.BIN
4939.260.BIN
4364.260
4458.102.BIN
4364.112
4989.102.BIN
4672.050.BIN
4365.112
4379.150
4365.030
4650.260.BIN
4989.150.BIN
4490.260.BIN
4709.050.BIN
4479.140.BIN
4366.150.BIN
4961.050.BIN
4674.030.BIN
4458.112.BIN
4960.112.BIN
4496.030.BIN
4447.140.BIN
4901.050.BIN
4494.050.BIN
4674.050.BIN
4496.112.BIN
4367.030.BIN
4360.260
4455.030.BIN
4674.112.BIN
4364.030
4371.260.BIN
4961.112.BIN
4370.112
4374.112
4709.140.BIN
4308.112
4383.150.BIN
4359.150
4450.030.BIN
4487.260.BIN
4490.102.BIN

4966.102.BIN
4968.030.BIN
4455.112.BIN
4646.102.BIN
4379.112
4360.140
4375.150
4369.112
4380.112
4302.112
4358.112
4968.150.BIN
4336.112.S
4373.112
4370.260
4459.050.BIN
4611.260.BIN
4361.030.BIN
4359.140
4325.112
4497.030.BIN
4376.112.BIN
4450.102.BIN
4450.050.BIN
4960.050.BIN
4378.260
4356.030.BIN
4901.102.BIN
4376.260.BIN
4359.112
4438.140.BIN
4379.050
4380.260
4373.030
4380.150
4497.102.BIN
4464.050.BIN
4369.150
4373.260
4448.030.BIN
4967.050.BIN
4497.140.BIN
4375.030
4368.030
4369.030
4379.260
4388.112.BIN
4368.140
4371.050.BIN
4375.112
4360.112
4374.260
4709.260.BIN
4371.112.BIN
4360.030

4380.050
4358.030
4359.030
4369.140
4366.140.BIN
4368.150
4370.030
4366.030.BIN
4932.260.BIN
4672.112.BIN
4902.050.BIN
4370.140
4374.030
4371.030.BIN
4903.050.BIN
4370.150
4901.150.BIN
4375.050
4379.030
4968.050.BIN
4939.050.BIN
4375.260
4380.030
4489.030.BIN
4970.030.bin
4970.112.bin
4970.150.bin
4970.260.bin
4973.031.bin
4973.030.bin
4973.040.bin
4973.112.bin
4973.150.bin
4973.260.bin
4975.030.bin
4975.112.bin
4975.150.bin
4975.260.bin
4975.140.bin
4976.030.bin
4976.112.bin
4976.150.bin
4976.260.bin
4976.140.bin
4980.030.bin
4980.112.bin
4980.150.bin
4980.260.bin
4980.140.bin
4981.030.bin
4981.112.bin
4981.150.bin
4981.260.bin
4981.140.bin
4485.031.bin

4485.030.bin
4485.040.bin
4485.112.bin
4485.150.bin
4485.260.bin
4486.031.bin
4486.030.bin
4486.040.bin
4486.112.bin
4486.150.bin
4486.260.bin
4983.031
4983.030
4983.040
4983.112
4983.150
4983.260
4984.031
4984.030
4984.040
4984.112
4984.150
4984.260

CYLINDERS

8323.102
8323.003
8325.102
8323.150
8323.056
8323.112
8323.031
8323.190
8324.102
8323.260
8325.112
8325.150
8323.055
8325.190
8325.003
8324.031
8325.056
8325.055
8324.003
8325.031
8324.112
8325.260
8324.150
8324.190
8324.056
8324.055
8324.260

DEADBOLTS

8260.031
8260.040
8260.102

8260.112
8260.150
8260.260
8260.003
8260.055
8260.056
8231.102
8231.003
8231.112
8231.056
8231.150
8220.150
8231.031
8231.190
8231.055
8241.150
8231.260
8285.056
8241.260
8220.102
8220.056
8285.150
8220.260
8241.102
8244.150
8220.190
8254.102
8254.190
8244.260
8244.056
8254.112
8241.056
8220.112
8244.102
8252.102
8241.190
8220.055
8244.190
8252.112
8244.003
8285.190
8241.003
8285.102
8254.150
8241.112
8244.055
8241.055
8285.260
8244.112
8285.112
8285.055
8241.031
8244.031
8254.003
8254.056

8252.190
8220.003
8254.055
8254.031
8252.150
8252.003
8285.003
8220.031
8285.031
8252.056
8254.260

DOOR STOPS

4505.150
4045.150
4045.102
4505.260
4505.102
4045.260
4045.112
4045.031
4505.031
4505.112
4045.003
4045.190
4505.190
4505.055
4045.055
4505.056
4505.003
4045.056

EVOLVED

8380.003
8380.055
8380.056
8220.003.B
8220.031.B
8220.055.B
8220.056.B
8220.102.B
8220.112.B
8220.150.B
8220.260.B
8231.003.B
8231.031.B
8231.055.B
8231.056.B
8231.102.B
8231.112.B
8231.150.B
8231.190.B
8231.260.B
8252.003.B
8252.056.B
8252.102.B
8252.112.B

85393.190.ZWRENT
5255.150.LENT
5255.150.RENT
5255.260.LENT
5255.260.RENT
5275.003.ENTR
5275.031.ENTR
5275.055.ENTR
5275.056.ENTR
5275.102.ENTR
5275.112.ENTR
5275.150.ENTR
5275.260.ENTR

LATCHES

5510.003
5510.003.P
5510.031
5510.031.P
5510.055
5510.055.P
5510.056
5510.056.P
5510.102
5510.102.P
5510.112
5510.112.P
5510.150
5510.150.P
5510.190
5510.190.P
5510.260
5510.260.P
5513.003
5513.003.P
5513.031
5513.031.P
5513.055
5513.055.P
5513.056
5513.056.P
5513.102
5513.102.P
5513.112
5513.112.P
5513.150
5513.150.P
5513.190
5513.190.P
5513.260
5513.260.P
5520.003
5520.003.P
5520.031
5520.031.P
5520.055
5520.055.P
5520.056
5520.056.P
5520.102
5520.102.P
5520.112
5520.112.P
5520.150
5520.150.P
5520.190
5520.190.P
5520.260
5520.260.P
5523.003
5523.003.P
5523.031
5523.031.P
5523.055
5523.055.P
5523.056
5523.056.P
5523.102
5523.102.P
5523.112
5523.112.P
5523.150
5523.150.P
5523.190
5523.190.P
5523.260
5523.260.P

MORTISE LOCKS

6020.003.L
6020.003.LLS
6020.003.R
6020.003.RLS
6020.031.L
6020.055.L
6020.055.LLS
6020.055.R
6020.055.RLS
6020.056.L
6020.056.LLS
6020.056.R
6020.056.RLS
6020.102.L
6020.102.LLS
6020.102.R
6020.102.RLS
6020.112.L
6020.112.LLS
6020.112.R
6020.112.RLS
6020.150.L
6020.150.LLS
6020.150.R
6020.150.RLS
6020.190.L
6020.190.LLS
6020.190.R
6020.190.RLS
6020.260.L
6020.260.LLS
6020.260.R
6020.260.RLS
6021.003.L
6021.003.LLS
6021.003.R
6021.003.RLS
6021.031.L
6021.031.LLS
6021.031.R
6021.031.RLS
6021.055.L
6021.055.LLS
6021.055.R
6021.055.RLS
6021.056.L
6021.056.LLS
6021.056.R
6021.056.RLS
6021.102.L
6021.102.LLS
6021.102.R
6021.102.RLS
6021.112.L
6021.112.LLS
6021.112.R
6021.112.RLS
6021.150.L
6021.150.LLS
6021.150.R
6021.150.RLS
6021.190.L
6021.190.LLS
6021.190.R
6021.190.RLS
6021.260.L
6021.260.LLS
6021.260.R
6021.260.RLS
6320.003.L
6320.003.LLS
6320.003.R
6320.003.RLS
6320.031.L
6320.031.R
6320.031.RLS
6320.055.L
6320.055.LLS
6320.055.R
6320.055.RLS
6320.056.L
6320.056.LLS
6320.056.R
6320.056.RLS
6320.102.L
6320.102.LLS
6320.102.R
6320.102.RLS
6320.112.L
6320.112.LLS
6320.112.R
6320.112.RLS
6320.150.L
6320.150.LLS
6320.150.R
6320.150.RLS
6320.190.L
6320.190.LLS
6320.190.R
6320.190.RLS
6320.260.L
6320.260.LLS
6320.260.R
6320.260.RLS
6321.003.L
6321.003.LLS
6321.003.R
6321.003.RLS
6321.031.L
6321.031.LLS
6321.031.R
6321.031.RLS
6321.055.L
6321.055.LLS
6321.055.R
6321.055.RLS
6321.056.L
6321.056.LLS
6321.056.R
6321.056.RLS
6321.102.L
6321.102.LLS
6321.102.R
6321.102.RLS
6321.112.L
6321.112.LLS
6321.112.R
6321.112.RLS
6321.150.L
6321.150.LLS
6321.150.R
6321.150.RLS
6321.190.L
6321.190.LLS
6321.190.R
6321.190.RLS
6321.260.L
6321.260.LLS
6321.260.R
6321.260.RLS

PRE-CONFIGURED

5015.003.FD
5015.003.IDM
5015.003.PASS
5015.003.PRIV
5015.031.FD
5015.031.IDM
5015.031.PASS
5015.031.PRIV
5015.055.FD
5015.055.IDM
5015.055.PASS
5015.055.PRIV
5015.102.FD
5015.102.IDM
5015.102.PASS
5015.102.PRIV
5015.112.FD
5015.112.IDM
5015.112.PASS
5015.112.PRIV
5015.150.FD
5015.150.IDM
5015.150.PASS
5015.150.PRIV
5015.260.FD
5015.260.IDM
5015.260.PASS
5015.260.PRIV
5020.003.FD
5020.003.IDM
5020.003.PASS
5020.003.PRIV
5020.031.FD
5020.031.IDM
5020.031.PASS
5020.031.PRIV
5020.055.FD
5020.055.IDM
5020.055.PASS
5020.055.PRIV
5020.102.FD
5020.102.IDM
5020.102.PASS
5020.102.PRIV
5020.112.IDM
5020.112.PASS
5020.112.PRIV
5020.150.FD
5020.150.IDM
5020.150.PASS
5020.150.PRIV
5020.260.IDM
5020.260.PASS
5020.260.PRIV
5025.003.FD
5025.003.IDM
5025.003.PASS
5025.003.PRIV
5025.031.FD
5025.031.IDM
5025.031.PASS
5025.031.PRIV
5025.055.FD
5025.055.IDM
5025.055.PASS
5025.055.PRIV
5025.102.FD
5025.102.IDM
5025.102.PASS
5025.102.PRIV
5025.112.FD
5025.112.IDM
5025.112.PASS
5025.112.PRIV
5025.150.FD
5025.150.IDM
5025.150.PASS
5025.150.PRIV
5025.260.FD
5025.260.IDM
5025.260.PASS
5025.260.PRIV
5080.102.FD
5080.102.IDM
5080.102.PASS
5080.102.PRIV
5080.112.FD
5080.112.IDM
5080.112.PASS
5080.112.PRIV
5080.140.FD
5080.140.IDM
5080.140.PASS
5080.140.PRIV
5080.150.FD
5080.150.IDM
5080.150.PASS
5080.150.PRIV
5080.260.FD
5080.260.IDM
5080.260.PASS

5080.260.PRIV
5162.055.FD
5162.055.LDM
5162.055.PASS
5162.055.PRIV
5162.055.RDM
5162.056.FD
5162.056.LDM
5162.056.PASS
5162.056.PRIV
5162.056.RDM
5162.102.FD
5162.102.LDM
5162.102.PASS
5162.102.PRIV
5162.102.RDM
5162.150.FD
5162.150.LDM
5162.150.PASS
5162.150.PRIV
5162.150.RDM
5162.260.FD
5162.260.LDM
5162.260.PASS
5162.260.PRIV
5162.260.RDM
5260.xxx.RENT
5260.xxx.LENT
5261.xxx.RENT
5261.xxx.LENT
5260.xxx.FD
5261.xxx.FD
5263.xxx.RENT
5263.xxx.LENT
5264.xxx.RENT
5264.xxx.LENT
5445V.003.FD
5445V.003.LDM
5445V.003.PASS
5445V.003.PRIV
5445V.003.RDM
5445V.031.FD
5445V.031.LDM
5445V.031.PASS
5445V.031.PRIV
5445V.031.RDM
5445V.055.FD
5445V.055.LDM
5445V.055.PASS
5445V.055.PRIV
5445V.055.RDM
5445V.102.FD
5445V.102.LDM
5445V.102.PASS
5445V.102.PRIV

5445V.102.RDM
5445V.112.FD
5445V.112.LDM
5445V.112.PASS
5445V.112.PRIV
5445V.112.RDM
5445V.150.FD
5445V.150.LDM
5445V.150.PASS
5445V.150.PRIV
5445V.150.RDM

NOTES

NOTES

NOTES

NOTES

CONDITIONS OF SALE

TERMS: 2%/25 Days, Net/30

SHIPMENTS: U.S. customers - F.O.B. Edgerton, KS or Nogales, AZ. Full freight allowed on purchase orders sent through routing of our selection. Delivery is made to curb or dock side only. Freight allowed shipments to Alaska will be prepaid to Seattle, to Hawaii will be prepaid to San Fransisco, and to Puerto Rico will be prepaid to Miami. Upon delivery to the transportation company, shipments become the property of the purchasers, who assume full risk for loss or damage in transit.
International Customers - Orders will ship FCA to city specified on the commercial invoice. Exceptions will be subject to the INCO terms stated on the commercial invoice. Canadian customers should contact their sales reps for variations to these terms.

CLAIMS: All claims, whether referring to errors in prices, or in filling orders or for defective goods, must be submitted IN WRITING within 30 days after receipt of shipment. Tracing of all lost shipments must be submitted IN WRITING within 30 days or the liability and risk is placed on the purchasers. All issued documents by a carrier confirming receipt of a shipment must be honored by the purchasers.

RETURNED GOODS: Returned goods will not be accepted unless authorized in writing by Baldwin within 120 days of invoice date. A minimum 25% handling charge and freight will be charged on all stock items returned in original condition. Special and custom products are not returnable for credit. An 80% handling charge will be imposed on products damaged. No credit will be given for items returned without written authorization, nor will the items be returned to the customer. Authorized returns become void after a period of 30 days from issue date of the Returned Goods Authorization. All credit returns must be shipped to us, FREIGHT PREPAID.

ORDERS: Orders of less than $250.00 net need to be entered via Baldwin Express. Most orders for stock items will be shipped within four (4) weeks from receipt of order. To expedite customer orders, items unavailable from stock at time of shipment will be back-ordered unless otherwise noted by customer. Quantities of a particular item will be rounded to the next full box quantity without incurring any obligations for credit. We reserve the right to decline the whole or part of orders in which the price, finishes or quantity of goods is not satisfactory to us. We reserve the right to discontinue items or change specifications at any time without notice and without incurring any obligations. The corporation cannot be liable for extended delivery dates which may result in the cancellation of an order.

CANCELLATIONS: While Baldwin will attempt to comply with customer's written change orders and/or cancellations, we cannot guarantee that they can be accomplished before shipment. Appropriate handling charges on returns will be exercised if the order has been shipped before processing a change order request. All requests must be submitted in writing.

PRICES: The price list in effect on the date customer order is received will determine billing price. Orders requiring delivery in excess of three (3) months will be billed at prices in effect at time of shipment, unless quoted to the contrary in writing by our company.

Orders being held by Baldwin because of account credit status may be repriced to the price in effect the day the order is released by the Baldwin Credit Department.

SPECIFICATIONS: Packing, weights, measurements, and design are subject to change without notice.

SPECIAL FABRICATION: Items of Special Manufacture are not cancelable after a period of 72 hours from receipt of an order. A cancellation of this nature will result in a penalty charge equal to the total expenses incurred on the product. Delivery on orders of special fabrication cannot be guaranteed due to variables beyond our control. The corporation cannot be liable for extended deliveries on special orders and consequently, are not cancelable.

Limited Lifetime Mechanical Warranty: Baldwin warrants that each Baldwin product shall be free of mechanical defect for the original purchaser for as long as you own your home.

Limited Electronic Warranty: Baldwin Estate electronic products come with a 1 year electronic warranty to the original residential user of the product against defects in material and workmanship as long as the original user occupies the residential premises upon which the product was originally installed. This warranty does not cover scratches, abrasions, deterioration due to the use of paints, solvents or other chemicals, abuse, misuse, or product used in commercial applications.

Limited Lifetime Finish™ Warranty: The Baldwin Lifetime Finish uses advanced finishing technology (physical vapor deposition) to create a finish highly resistant to the effects of weather and normal wear and tear. The Limited Lifetime Finish Warranty on Lifetime Finish™ products covers the original purchaser for as long as you own your home.

Limited Finish Warranty: The finish on Baldwin products (excluding Lifetime Finish and living finish products) is protected by a durable topcoat designed to maintain the beauty and quality of the Baldwin product. The Baldwin Limited Finish Warranty covers the original purchaser for five years from date of purchase for interior use and one year for exterior use.

Living Finishes: Due to the nature of Baldwin living finish products, they will wear over time and may already have begun the process before reaching your home. No finish warranty is offered on living finish products, which are designed to age and improve over time. Living finishes include raw brass, oil rubbed bronze, stainless steel, and other non-lacquered or non-PVD finishes.

IMPORTANT! You must install Baldwin strikeplate or your warranty is void.
For complete information on Baldwin Estate's Limited Warranty, please visit www.baldwinhardware.com

Except as expressly provided in this warranty to the contrary, (a) BALDWIN MAKES NO, AND DISCLAIMS ALL, WARRANTIES, REPRESENTATIONS AND GUARANTEES (WHETHER EXPRESS, IMPLIED OR STATUTORY), INCLUDING, BUT NOT LIMITED TO, ANY IMPLIED WARRANTY OF MERCHANTABILITY OR FITNESS FOR A PARTICULAR PURPOSE, AND (b) BALDWIN SHALL NOT BE OBLIGATED OR LIABLE FOR LABOR OR OTHER COSTS RELATED TO INSTALLATION, REPAIR OR REPLACEMENT OR FOR LOSS OF, OR DAMAGE TO, ANY MATERIAL WHICH IS NOT SOLD BY BALDWIN. IN NO EVENT SHALL THE DURATION OF ANY IMPLIED WARRANTY OF MERCHANTABILITY OR FITNESS FOR A PARTICULAR PURPOSE BE LONGER THAN the lifetime of the applicable product or for as long as the original purchaser owns the product. This warranty is the only express warranty provided by Baldwin. No employee, representative or agent nor any other person has authority to assume or incur on behalf of Baldwin any obligation or liability in place of or in addition to this warranty.

Each of Baldwin's direct customers shall receive any claims and take delivery of any allegedly defective Baldwin products from the consumers and shall communicate and otherwise cooperate in a reasonable manner with Baldwin concerning the administration, processing and remedying of such claims, including, but not limited to, delivering repaired or replacement Baldwin products or, in the appropriate case, purchase price refunds to consumers. Please Note: The limited warranty on all locks or latches is void if used in combination with knobs, levers or trim of other than those manufactured by Baldwin and designated for use with the applicable locks or latches.

STANDARDS OF EXCELLENCE: Baldwin Hardware Corporation has produced a range of products in accordance to the HIGHEST STANDARDS OF QUALITY AND EXCELLENCE. All brass products are manufactured from the finest quality brass obtainable; however, these products are susceptible to indentation and imperfections due to the malleability of the material and the elements of human intervention when crafting the product. Although our internal safeguards protect us against shipping products of unacceptable quality, an imperfection or surface blemish may be considered the highest Quality Standard obtainable on a particular product. Baldwin is committed to producing each item to the most stringent guidelines and quality of human ability and excellence; however, all final decisions of Quality remain exclusively in the authorization of the Corporation. While Baldwin makes every effort to provide an accurate price list, we are not responsible for errors and/or omissions which may appear. Customers will be invoiced the actual price on all orders.

SPINDLES

0509 - 0517 Broached Straight Spindles – PASSAGE

Item #	Description	Size	
0509.004	Broached straight	3″	$14
0510.004	Broached straight	3.5″	$14
0511.004	Broached straight	4″	$14
0512.004	Broached straight	4.5″	$14
0513.004	Broached straight	5″	$14
0514.004	Broached straight	5.5″	$14
0515.004	Broached straight	6″	$14
0516.004	Broached straight	7″	$14
0517.004	Broached straight	3.75″	$14

0519 - 0527 Broached Swivel Spindles – PRIVACY

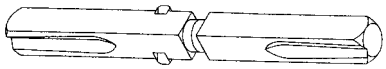

Item #	Description	Size	
0519.004	Broached swivel	3″	$19
0520.004	Broached swivel	3.5″	$19
0521.004	Broached swivel	4.5″	$19
0522.004	Broached swivel	4″	$19
0523.004	Broached swivel	5″	$19
0524.004	Broached swivel	5.5″	$19
0525.004	Broached swivel	6.5″	$19
0527.004	Broached swivel	3.75″	$19

0530 - 0539 Broached Half Spindles – FRONT DOOR
(thumbpiece to knob or lever)

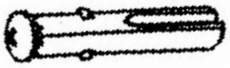

Item #	Description	Size	
0530.004	Broached half	2.375″	$14
0531.004	Broached half	2.875″	$14
0532.004	Broached half	3.375″	$14
0533.004	Broached half	2.25″	$14
0539.004	Broached half	2.625″	$14

>For mounting all current Estate knobs and levers to thumbpiece of handlesets
>Included with all 'set' orders

SPINDLE CHART & KEY

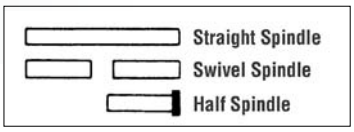

Door Thickness	1.375″		1.75″		2″		2.25″		2.5″	
Lock Trim Thickness	Spindle	Half Spindle	Spindle	Half Spindle	Spindle	Half Spindle	Spindle	Half Spindle	Spindle	Half Spindle
A – .0625″	3.5″	2.25″	4″	2.25″	4″	2.25″	4.5″	2.25″	4.5″	2.375″
B – .0937″	3.5″	2.25″	4″	2.25″	4″	2.25″	4.5″	2.25″	4.5″	2.375″
C – .125″	3.5″	2.25″	4″	2.25″	4.5″	2.25″	4.5″	2.25″	5″	2.375″
D – .1875″	3.5″	2.25″	4″	2.25″	4.5″	2.25″	4.5″	2.375″	5″	2.375″
E – .25″ Estate Roses	3.5″	2.25″	4″	2.25″	4.5″	2.25″	4.5″	2.375″	5″	2.875″
F – .3125″	4″	2.25″	4.5″	2.25″	4.5″	2.375″	5″	2.375″	5″	2.875″
G – .375″	4″	2.25″	4.5″	2.25″	5″	2.375″	5″	2.875″	5.5″	2.875″
H – .435″	4.5″	2.25″	4.5″	2.375″	5″	2.375″	5″	2.625″	5.5″	2.875″
I – .56″	4.5″	2.25″	5″	2.375″	5″	2.625″	5.5″	2.625″	5.5″	2.875″
J – .75″	5″	2.625″	5.5″	2.875″	5.5″	2.875″	6″	2.875″	6″	2.875″

.A SUFFIX TRANSITIONAL SPINDLES (OLD STYLE):
For use with all discontinued Estate threaded knobs & levers, as well as all current Estate knobs and levers

Transitional Straight Spindles – Passage

Item #	Description	Size	
0509.004.A	Transitional straight	3″	$20
0510.004.A	Transitional straight	3.5″	$20
0511.004.A	Transitional straight	4″	$20
0512.004.A	Transitional straight	4.5″	$20
0513.004.A	Transitional straight	5″	$20
0514.004.A	Transitional straight	5.5″	$20
0515.004.A	Transitional straight	6″	$20
0516.004.A	Transitional straight	7″	$20

Transitional Swivel Spindles – Privacy

Item #	Description	Size	
0519.004.A	Transitional swivel	3″	$26
0520.004.A	Transitional swivel	3.5″	$26
0521.004.A	Transitional swivel	4.5″	$26
0522.004.A	Transitional swivel	4″	$26
0524.004.A	Transitional swivel	5″	$26
0525.004.A	Transitional swivel	6.5″	$26

Transitional Half Spindles – Front Door (thumbpiece to knob or lever)

Item #	Description	Size	
0530.004.A	Transitional half	2.375″	$20
0531.004.A	Transitional half	2.875″	$20
0532.004.A	Transitional half	3.375″	$20
0533.004.A	Transitional half	2.25″	$20

C KEYWAY TABLE

Single Cylinder – C Keyway

Door Thickness	1.375″		1.75″		2″		2.25″		2.5″	
Lock Trim Thickness	Cylinder Length	Blocking Ring	Cylinder Length	Blocking Ring	Cylinder Length	Blocking Ring	Cylinder Length	Blocking Ring	Cylinder Length	Blocking Ring
A – .0625″	1″ 8321.xxx	.1875″ 8440.	1″ 8321.xxx	—	1.125″ 8322.xxx	—	1.25″ 8323.xxx	—	1.375″ 8324.xxx	—
B – .0937″	1″ 8321.xxx	.1562″ 8440.	1″ 8321.xxx	—	1.125″ 8322.xxx	—	1.25″ 8323.xxx	—	1.375″ 8324.xxx	—
C – .125″	1″ 8321.xxx	.125″ 8440.	1.125″ 8322.xxx	—	1.125″ 8322.xxx	—	1.25″ 8323.xxx	—	1.375″ 8324.xxx	—
D – .1875″	1″ 8321.xxx	—	1.125″ 8322.xxx	—	1.25″ 8323.xxx	—	1.375″ 8324.xxx	—	1.5″ 8325.xxx	—
E – .25″	1″ 8321.xxx	—	1.25″ 8323.xxx	—	1.25″ 8323.xxx	—	1.375″ 8324.xxx	—	1.5″ 8325.xxx	—
F – .3125″	1.125″ 8322.xxx	—	1.25″ 8323.xxx	—	1.375″ 8324.xxx	—	1.5″ 8325.xxx	—	1.625″ 8326.xxx	—
G – .375″	1.125″ 8322.xxx	—	1.25″ 8323.xxx	—	1.375″ 8324.xxx	—	1.5″ 8325.xxx	—	1.625″ 8326.xxx	—
H – .435″	1.125″ 8322.xxx	—	1.375″ 8324.xxx	—	1.5″ 8325.xxx	—	1.625″ 8326.xxx	—	1.75″ 8327.xxx	—
H1 – .53″	1.125″ 8322.xxx	—	1.5″ 8325.xxx	—	1.625″ 8326.xxx	—	1.75″ 8327.xxx	—	1.75″ 8327.xxx	—
I – .56″	1.125″ 8322.xxx	—	1.5″ 8325.xxx	—	1.625″ 8326.xxx	—	1.75″ 8327.xxx	—	1.75″ 8327.xxx	—
J – .75″	1.5″ 8325.xxx	—	1.625″ 8326.xxx	—	1.75″ 8327.xxx	—	2″ 8328.xxx	.125″ 8440.	2″ 8328.xxx	—

QUICK SHIP
ships in 3 days

Item #	Description		003, 031, 033, 050, 060, 102, 112, 150, 151, 152, 190, 260, 264	044 055 056
8321.xxx	1″	Mortise Cyl.	$65	$71
8322.xxx	1.125″	Mortise Cyl.	$65	$71
8323.xxx	1.25″	Mortise Cyl.	$65	$71
8324.xxx	1.375″	Mortise Cyl.	$65	$71
8325.xxx	1.5″	Mortise Cyl.	$65	$71
8326.xxx	1.625″	Mortise Cyl.	$135	$141
8327.xxx	1.75″	Mortise Cyl.	$135	$141
8328.xxx	2″	Mortise Cyl.	$135	$141
8329.xxx	2.25″	Mortise Cyl.	$135	$141
8330.xxx	2.5″	Mortise Cyl.	$135	$141

NOTE: When ordering cylinders for G-SERIES MORTISE LOCKS, use this chart, but add a suffix '.EMHT' to the end of the Item #. (same price as standard C keyway cylinders)

EXAMPLE:
Lifetime Polished Brass 1.25″ cylinder for G-series mortise
8323.003.EMHT

8330

Double Cylinder - C Keyway

Door Thickness	1.375″		1.75″		2″		2.25″		2.5″	
Lock Trim Thickness	Cylinder Length	Blocking Ring	Cylinder Length	Blocking Ring	Cylinder Length	Blocking Ring	Cylinder Length	Blocking Ring	Cylinder Length	Blocking Ring
A – .0625″	1″ 8321.xxx.DBL	.2812″+ 8440.xxx.2&5	1″ 8321.xxx.DBL	.0937″+ 8440.xxx.2	1″ 8321.xxx.DBL	—	1.125″ 8322.xxx.DBL	—	1.25″ 8323.xxx.DBL	—
B –.0937″	1″ 8321.xxx.DBL	.25″+ 8440.xxx.6	1″ 8321.xxx.DBL	.125″ 8440.xxx.3	1″ 8321.xxx.DBL	—	1.125″ 8322.xxx.DBL	—	1.25″ 8323.xxx.DBL	—
C – .125″	1″ 8321.xxx.DBL	.25″+ 8440.xxx.6	1″ 8321.xxx.DBL	.0625″ 8440.xxx.1	1.125″ 8322.xxx.DBL	.0625″ 8440.xxx.1	1.25″ 8323.xxx.DBL	.0625″ 8440.xxx.1	1.375″ 8324.xxx.DBL	.0625″ 8440.xxx.1
D –.1875″	1″ 8321.xxx.DBL	.1562″+ 8440.xxx.4	1.125″ 8322.xxx.DBL	.0937″+ 8440.xxx.2	1.125″ 8322.xxx.DBL	—	1.25″ 8323.xxx.DBL	—	1.375″ 8324.xxx.DBL	—
E – .25″	1″ 8321.xxx.DBL	.0937″+ 8440.xxx.2	1.125″ 8322.xxx.DBL	.0625″ 8440.xxx.1	1.25″ 8323.xxx.DBL	.0625″ 8440.xxx.1	1.375″ 8324.xxx.DBL	.0625″ 8440.xxx.1	1.5″ 8325.xxx.DBL	.0625″ 8440.xxx.1
F –.3125″	1″ 8321.xxx.DBL	.0625″ 8440.xxx.1	1.25″ 8323.xxx.DBL	.0937″+ 8440.xxx.2	1.25″ 8323.xxx.DBL	—	1.375″ 8324.xxx.DBL	—	1.5″ 8325.xxx.DBL	—
G – .375″	1″ 8321.xxx.DBL	—	1.25″ 8323.xxx.DBL	.0625″ 8440.xxx.1	1.375″ 8324.xxx.DBL	.0625″ 8440.xxx.1	1.5″ 8325.xxx.DBL	.0625″ 8440.xxx.1	1.625″ 8326.xxx.DBL	.0625″ 8440.xxx.1
H – .435″	1″ 8321.xxx.DBL	—	1.25″ 8323.xxx.DBL	—	1.375″ 8324.xxx.DBL	—	1.5″ 8325.xxx.DBL	—	1.625″ 8326.xxx.DBL	—
H1 – .53″	1.125″ 8322.xxx	—	1.375″ 8324.xxx.DBL	—	1.5″ 8325.xxx.DBL	.0625″ 8440.xxx.1	1.625″ 8326.xxx.DBL	—	1.75″ 8327.xxx.DBL	—
I –.5625″	1.125″ 8322.xxx.DBL	—	1.375″ 8324.xxx.DBL	—	1.5″ 8325.xxx.DBL	—	1.625″ 8326.xxx.DBL	—	1.75″ 8327.xxx.DBL	—
J – .75″	1.5″ 8325.xxx.DBL	.0937″+ 8440.xxx.2	1.625″ 8326.xxx.DBL	.0625″ 8440.xxx.1	1.75″ 8327.xxx.DBL	.0625″ 8440.xxx.1	2″ 8328.xxx.DBL	.1562″+ 8440.xxx.4	2″ 8328.xxx.DBL	.0625″ 8440.xxx.1
F –.3125″ Exterior	1″ 8321.xxx	—	1.125″ 8322.xxx	—	1.25″ 8323.xxx	—	1.375″ 8324.xxx	—	1.5″ 8325.xxx	—
K – .875″ Exterior	1.5″ 8325.xxx	—	1.75″ 8327.xxx	—	2″ 8328.xxx	.125″ 8440.xxx.3	2″ 8328.xxx	—	2.25″ 8329.xxx	.125″ 440.xxx.3

+ Two Blocking Rings Required

Item #	Description		003, 031, 033, 050, 060, 102, 112, 150, 151, 152, 190, 260, 264	044 055 056
8321.xxx.DBL	1″	Double Cyl.	$129	$141
8322.xxx.DBL	1.125″	Double Cyl.	$129	$141
8323.xxx.DBL	1.25″	Double Cyl.	$129	$141
8324.xxx.DBL	1.375″	Double Cyl.	$129	$141
8325.xxx.DBL	1.5″	Double Cyl.	$129	$141
8326.xxx.DBL	1.625″	Mortise Cyl.	$269	$281
8327.xxx.DBL	1.75″	Mortise Cyl.	$269	$281
8328.xxx.DBL	2″	Mortise Cyl.	$269	$281
8329.xxx.DBL	2.25″	Mortise Cyl.	$269	$281
8330.xxx.DBL	2.5″	Mortise Cyl.	$269	$281

Blocking Rings

Item #	Description	003, 031, 033, 050, 060, 102, 112, 150, 151, 152, 190, 260, 264	044 055 056
8440.xxx.001	.0625″ – 1/16″ B.R.	$18	$25
8440.xxx.002	.0937″ – 3/32″ B.R.	$18	$25
8440.xxx.003	.125″ – 1/8″ B.R.	$18	$25
8440.xxx.004	.1562″ – 5/32″ B.R.	$18	$25
8440.xxx.005	.1875″ – 3/16″ B.R.	$18	$25
8440.xxx.006	.25″ – 1/4″ B.R.	$18	$25

8440

***Cylinders NOT available in Distressed finishes, non-distressed equivalents: 402=102, 452=152**

HOW TO ORDER

STEP 1 — PICK YOUR HANDLESET TRIM, W/ KNOB OR LEVER: (SEE PAGE 105 - 143)

STEP 2 — PICK YOUR MORTISE BOX

	Suffix*	Minus Strike*
Right hand	.R	.RDT
Left hand	.L	.LDT
Right hand Reverse bevel	.RR	.RRDT
Left hand Reverse bevel	.LR	.LRDT
Right hand Lever Strength	.RLS	.RLSDT
Left hand Lever Strength	.LLS	.LLSDT
Right hand Reverse bevel Lever Strength	.RRLS	. RRLSDT
Left hand Reverse bevel Lever Strength	.LRLS	. LRLSDT
Right hand Reverse bevel Lever Strength with 1″Front	.RRB1	.RRB1DT
Left hand Reverse bevel Lever Strength with 1″Front	.LRB1	.LRB1DT

Entrance Function Mortise Locks	**003, 031, 033, 034, 050 060, 102, 112 150, 151, 152 190, 260, 264**	**044 055 056**
Lock with strike	$404	$427
Lock without strike	$369	$386

				HANDLESET X KNOB		HANDLESET X LEVER		KNOB X KNOB	LEVER X LEVER
Backset	**Door Thickness**	**Function**	**Mortise Box**	**Handing**	**Part Number**	**Handing**	**Part Number**	**Part Number**	**Part Number**
2.75″	1.75″ and up	Residential Entrance	6020	R	6020.xxx.R	RLS	6020.xxx.RLS	6001.xxx.R	6001.xxx.RLS
				L	6020.xxx.L	LLS	6020.xxx.LLS	6001.xxx.L	6001.xxx.LLS
				RR	6020.xxx.RR	RRLS	6020.xxx.RRLS	6001.xxx.RR	6001.xxx.RRLS
				LR	6020.xxx.LR	LRLS	6020.xxx.LRLS	6001.xxx.LR	6001.xxx.LRLS
2.75″	1.75″ and up	Residential Entrance	6021	R	6021.xxx.R	RLS	6021.xxx.RLS	6075.xxx.R	6075.xxx.RLS
		Emergency Egress		L	6021.xxx.L	LLS	6021.xxx.LLS	6075.xxx.L	6075.xxx.LLS
				RR	6021.xxx.RR	RRLS	6021.xxx.RRLS	6075.xxx.RR	6075.xxx.RRLS
				LR	6021.xxx.LR	LRLS	6021.xxx.LRLS	6075.xxx.LR	6075.xxx.LRLS
2.75″	1.75″ and up	Entrance Back-to-Back	6025	-	-	-	-	-	-
2.5″	1.375 /1.75 and up	Residential Entrance	6320	R	6320.xxx.R	RLS	6320.xxx.RLS	6301.xxx.R	6301.xxx.RLS
				L	6320.xxx.L	LLS	6320.xxx.LLS	6301.xxx.L	6301.xxx.LLS
				RR	6320.xxx.RR	RRLS	6320.xxx.RRLS	6301.xxx.RR	6301.xxx.RRLS
				LR	6320.xxx.LR	LRLS	6320.xxx.LRLS	6301.xxx.LR	6301.xxx.LRLS
2.5″	1.375/1.75 and up	Residential Entrance	6321	R	6321.xxx.R	RLS	6321.xxx.RLS	6375.xxx.R	6375.xxx.RLS
		Emergency Egress		L	6321.xxx.L	LLS	6321.xxx.LLS	6375.xxx.L	6375.xxx.LLS
				RR	6321.xxx.RR	RRLS	6321.xxx.RRLS	6375.xxx.RR	6375.xxx.RRLS
				LR	6321.xxx.LR	LRLS	6321.xxx.LRLS	6375.xxx.LR	6375.xxx.LRLS
2.5″	1.375/1.75 and up	Entrance Back-to-Back	6325	-	-	-	-	-	-

STEP 3 — PICK YOUR CYLINDER (SEE INSIDE FLAP FOR CYLINDER TABLE)

IF YOUR DOOR IS NOT 1.75″ THICK, ALSO REQUIRED:

STEP 4 — SPINDLE (SEE INSIDE FLAP FOR CHART)

STEP 5 — THICK DOOR KIT (DOORS OVER 1.75″ AND UP TO 2.25″ THICK, SEE PAGE 144)

STEP 6 — EXTENDED LIP STRIKE

6037, 6038, 6039
6338, 6339

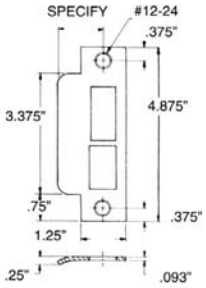

Lip to Center length determined by the following formula:
Door thickness ÷ 2 + .375″ (10mm) = Lip to Center length
Round to closest size

Item #	**Function**	**003, 031, 033, 034, 050 060, 102, 112 150, 151, 152 190, 260, 264**	**044 055 056**
6037.xxx.XXXX	2.75″ backset latch, deadbolt, aux latch	$76	$82
6038.xxx.XXXX	2.75″ backset latch only	$76	$82
6039.xxx.XXXX	2.75″ backset latch, deadbolt	$76	$82
6338.xxx.XXXX	1.5,″ 2,″ 2.5″ backset latch only	$76	$82
6339.xxx.XXXX	1.5,″ 2,″ 2.5″ backset latch, deadbolt	$76	$82

.XXXX indicates Extended Lip to Center size = .R158, .L158, .R178, .L178, .R214, .L214, .R300, .L300

6037, 6038, 6039, 6338, 6339.xxx – EXTENDED LIP STRIKES (HANDED)

>Use with locks installed on special door/frame conditions
>Supplied with a curved lip only
>ALWAYS SPECIFY HAND OF DOOR AND REQUIRED LENGTH
>Note: Reverse bevel doors use opposite hand for strike selection (ie. Right hand reverse bevel use left hand strike.)
>Lip to Center lengths:
.R158 or .L158 – 1.625″ (41mm)
.R178 or .L178 – 1.875″ (48mm)
.R214 or .L214 – 2.25″ (57mm)
.R300 or .L300 – 3″ (76mm)

***Strikes NOT available in Distressed finishes, non-distressed equivalents 402=102, 452=152**

BALDWIN®

19701 DA VINCI · LAKE FOREST · CALIFORNIA 92610

800.437.7448

BALDWINHARDWARE.COM

Baldwin, a Division of Spectrum Brands, Inc. Baldwin is a Trademark of Spectrum Brands, Inc. ©2020 Spectrum Brands, Inc. #440008