ANDERSEN®
WINDOWS & DOORS

400 SERIES



*2024 Andersen brand survey of U.S. contractors.

2025-26 PRODUCT GUIDE FOR PROFESSIONALS

CONTENTS

Performance 2
Exteriors & Interiors 3
Exterior Trim System 4
Andersen® 400 Series Windows 6
Andersen 400 Series Patio Doors 7
Andersen 400 Series Replacement Solutions 9
Glass 10-11
Window Hardware 12-13
Andersen Patio Door Hardware 14
Designer Hinged Door Hardware 16-17
Grilles & Insect Screens 18-19
Comparison Chart 20

400 SERIES WINDOWS

Casement & Awning Windows 21
Replacement Casement & Awning Windows 41
Complementary Casement Windows 45
Woodwright® Double-Hung Full-Frame Windows 51
Woodwright Double-Hung Insert Windows 71
Tilt-Wash Double-Hung Full-Frame Windows 79
Narroline® Double-Hung Window Conversion Kit 91
Tilt-Wash Double-Hung Insert Windows 93
Bay & Bow Windows 101
Gliding Windows 113
Specialty Windows 119
Complementary Specialty Windows 139

400 SERIES PATIO DOORS

Frenchwood® Gliding Patio Doors 143
Frenchwood Hinged Inswing Patio Doors 151
Frenchwood Patio Door Sidelights & Transoms 161
Complementary Curved Top Patio Doors 165

Art Glass 175
Exterior Trim 177

Combination Designs 183
Product Performance 199
Installation Accessories, Materials & Information 221
Environmental & Sustainability 224

For warranty information, visit **andersenwindows.com/warranty**.

ENERGY STAR AWARD 2024
PARTNER OF THE YEAR
Sustained Excellence

Andersen Corporation, including its subsidiaries, has been named a 2024 ENERGY STAR® Partner of the Year – Sustained Excellence Award winner, the highest honor given by ENERGY STAR, for continued leadership in protecting the environment through superior energy efficiency achievements.



"ENERGY STAR" is a registered trademark of the U.S. Environmental Protection Agency.



AMERICA'S MOST LOVED BRAND OF WINDOWS & DOORS.*

You want to give your customers a home they love, and we're here to make that easy for you. That's why we're proud to offer you products that rate #1 in quality and performance,** and to be the #1 trusted and recommended window and door brand** by pros.

400 SERIES PRODUCTS

Our most popular choice with homeowners and the windows contractors trust the most†. Easy to install, low maintenance and with fewer callbacks†, the 400 Series can be your go-to for pretty much any project.

*2024 Andersen brand surveys of U.S. contractors, builders, homeowners and realtors.
**2024 Andersen brand surveys of U.S. contractors, builders and architects.
†2024 Andersen brand survey of U.S. contractors.

PERFORMANCE

As our best-selling products, Andersen® 400 Series line offers a distinct blend of design, reliability and trade confidence. Designed for easy installation for replacement, remodel or new construction projects, 400 Series products feature our Perma-Shield® exterior cladding that revolutionized the window industry. They're also backed by our renowned limited warranty and the largest service network in the industry.

LOW MAINTENANCE, NEVER NEEDS PAINTING

The Perma-Shield exteriors on Andersen 400 Series windows and patio doors offer superior weather resistance and are virtually maintenance free.

BUILT FOR YEARS TO COME*

Our products are built strong to last long.* We use the right materials in the right places, including solid wood, fiberglass and our own Fibrex® composite material. These give our windows and patio doors superior strength, stability and long-term beauty.

RIGOROUSLY TESTED

The exclusive Andersen Perma-Shield system gives our windows and patio doors a tough, protective shell that safeguards the wood inside. It repels water, resists dents* and stays beautiful for years.

PERFORMANCE GRADE (PG) UPGRADE

PG upgrade is available for select sizes of 400 Series casement, awning and tilt-wash double-hung windows. Products with PG upgrade achieve higher air, water and structural ratings as opposed to standard products.



ENERGY-SAVING GLASS FOR ANY CLIMATE

Andersen makes windows and patio doors with options that make them ENERGY STAR® v. 7.0 certified throughout the United States.

Visit **andersenwindows.com/energystar** for more information and to verify that the product with your glass option is certified in your area.

ASK ABOUT ENERGY STAR

QUALITY SO SOLID, THE WARRANTY IS TRANSFERABLE*

Many other window and door warranties end when a home is sold, but our coverage – 20 years on glass, 10 years on non-glass parts – transfers from each owner to the next. And because it's not prorated, the coverage offers full benefits year after year, owner after owner. So it can add real value when you decide to sell your home.

OWNER2OWNER® LIMITED WARRANTY

KEEPS THE WEATHER OUT

Our weather-resistant construction and careful selection of weatherstrip by product type seals out drafts, wind and water whatever the weather.

OPTIONS FOR THE HARSHEST WEATHER

400 Series windows are available with Stormwatch® Protection to meet building code requirements in coastal areas.** Products with Stormwatch Protection are energy efficient, resist the effects of salt water, and stand up to hurricane-force winds and wind-borne debris. For details, visit **andersenwindows.com/coastal** or refer to the Andersen 400 Series Coastal Product Guide for more information.

StormWATCH® PROTECTION

*Visit andersenwindows.com/warranty for details.
**Consult your local building code official for code requirements in your area.
"ENERGY STAR" is a registered trademark of the U.S. Environmental Protection Agency.



EXTERIORS & INTERIORS

Our Perma-Shield® exterior cladding system, a time-tested Andersen innovation, offers low maintenance and durability while also providing an attractive appearance. The interiors of all 400 Series windows and patio doors are available in unfinished stain-grade pine or with a long-lasting*, low-maintenance white finish. Select windows are also available with a dark bronze or black finish. 400 Series Woodwright® windows and Frenchwood® patio doors are also available with unfinished maple or oak interiors.

EXTERIOR COLORS**

White | Canvas | Sandtone | Terratone | Dark Bronze | Forest Green | Black

INTERIOR OPTIONS**

Pine | Maple | Oak | White | Dark Bronze† | Black†

Design your window at
andersenwindows.com/design-tool

*Visit andersenwindows.com/warranty for details.
**Some products are not available in all colors or wood species. Contact your Andersen supplier for details.
†Most products with dark bronze and black interiors have matching exteriors; see the individual product sections for details.
Naturally occurring variations in grain, color and texture of wood make each window one of a kind. All wood interiors are unfinished unless a finish is specified.
Printing limitations prevent exact replication of colors and finishes. See your Andersen supplier for actual color and finish samples.

EXTERIOR TRIM SYSTEM

Add curb appeal with Andersen® exterior trim. Our trim is made with Fibrex® material, an environmentally smart composite that contains 40% pre-consumer recycled wood fiber by weight.

INSTALLS IN ABOUT 5 MINUTES

Time saving and cost effective

Innovative attachment strip

No nail holes, no visible fasteners, no painting

Independent of water management system for easy installation

Style that gets noticed

Our wide trim profiles overlap the window frame to create clean lines without visible sealant joints. Mitered brick mould corners and butt joints on flat casing profiles reflect traditional corner joints.



Cocoa bean trim with Sandtone window

Visit **andersenwindows.com/exteriortrim** to learn more.

EXTERIOR TRIM COLORS

White | Canvas | Prairie Grass | Sandtone | Terratone | Cocoa Bean | Dark Bronze | Red Rock | Forest Green | Dove Gray | Black

Printing limitations prevent exact duplication of colors. See your Andersen supplier for actual color samples.



THE CLAD WOOD WINDOWS

MORE CONTRACTORS TRUST FOR THEIR OWN HOME.*

*2024 Andersen brand survey of U.S. contractors.

ANDERSEN® 400 SERIES WINDOWS

Casement & Awning Windows

Now available with either traditional or contemporary interior trim stops and grilles to match any architectural style. With thin profiles, easy opening and energy efficiency, it's easy to see why these windows are best sellers. Available as integral twin or triple units, they bring in up to six feet of floor-to-ceiling fresh air. Use them in bay or bow windows, or combine them with coordinating picture, transom or specialty windows.



Complementary Casement Windows

Available in rectangles, trapezoids and curved shapes, and custom sizes in a variety of wood species. French casement windows, with no post between the sash, are also offered.



Woodwright® Double-Hung & Single-Hung Windows

Great for replicating the look of traditional architecture thanks to their classic design, and availability in pine, maple and oak wood species. Use them in bay windows, or combine them with coordinating picture or transom windows. Springline™ single-hung, and arch and unequal leg arch double-hung windows are also available.





Specialty Windows

Add style or create an accent with curved window shapes. Or, choose Flexiframe® windows that can be designed in nearly any shape made of straight lines, provided no angle is less than 14 degrees. Flexiframe windows are often used with casement or awning windows, and can be ordered with contemporary interior trim stops.

Complementary Specialty Windows

An additional 34 uncommon shapes in a variety of wood species.





Tilt-Wash Double-Hung Windows

Extremely energy efficient and our best-selling double-hung window. They balance the timeless look of double-hung windows with modern design options. Use them in bay windows, or combine them with coordinating picture or transom windows.

Gliding Windows

Superior energy efficiency, reliable performance and uncommon beauty. Both sash open for improved ventilation.



ANDERSEN® 400 SERIES PATIO DOORS

Frenchwood® Gliding & Hinged Inswing Patio Doors

Wide wood profiles provide the authentic craftsmanship of traditional French doors. Add blinds-between-the-glass to conveniently control light and privacy. Frame any patio door with our Frenchwood sidelights and transoms.





For contemporary-style patio door options, visit **andersenwindows.com/doors**.

Complementary Curved Top Patio Doors

Springline™ and arch hinged inswing and outswing patio doors offer dramatic curves. Handcrafted in a variety of wood species. Arch sidelights are also available.





OVERALL BEST-IN-CLASS AMONG CONTRACTORS

FOR CLAD WOOD WINDOWS.*

*2020 Andersen brand survey of U.S. contractors.

ANDERSEN® 400 SERIES REPLACEMENT SOLUTIONS

Homeowners and realtors agree that Andersen products increase the value of a home by at least 10%*. So you're not just replacing their windows, you're upgrading their home.

CUSTOM-SIZE WINDOWS

Casement, awning, full-frame double-hung and specialty windows are available in custom sizes so you can match the existing opening, or modify shape and size.



CUSTOM-SIZE PATIO DOORS

Whether you need a gliding or hinged patio door for replacement, there are a number of custom-size options to fit your project.

CUSTOM SIZES

CONVERSION KIT



Narroline® Double-Hung Window Conversion Kit

Transition Andersen® 200 Series Narroline double-hung windows (made from 1968 to 2013) to 400 Series tilt-wash double-hung windows without needing to replace the entire window.

INSERT & REPLACEMENT WINDOWS



Woodwright® & Tilt-Wash Double-Hung Insert Windows

Our double-hung windows are available as time-saving inserts. Choose the Woodwright double-hung for a more classic look or our best-selling tilt-wash double-hung window.



Replacement Casement & Awning Windows

Available without an installation flange for easy window replacement from the inside or outside. They feature predrilled, through-the-jamb fastener holes for quick installation.

Our insert and replacement windows include flat self-hanging shims, backer rod, installation screws and complete instructions.



*2020 Andersen brand surveys of U.S. realtors and homeowners.

GLASS

Andersen has the glass you need to get the performance you want. Check with your supplier for the selections that meet ENERGY STAR® requirements in your area.



Low-E4® SmartSun™ Glass

It helps shield your home from the sun's heat, filtering out 95% of harmful UV rays while letting sunlight shine through. Thermal control similar to tinted glass, with visible light transmittance similar to Low-E4 glass.



Low-E4 Glass

Outstanding overall performance and comfort for climates where both heating and cooling costs are a concern. Low-E4 glass reflects heat in the summer and helps keep heat inside in the winter.



Low-E4 Sun Glass

Outstanding thermal performance in southern climates where less solar heat gain is desired. It's tinted for maximum protection from the effects of intense sunlight while providing all the benefits of Low-E4 glass.



PassiveSun® Glass

Ideal in northern climates for passive solar construction applications where solar heat gain is desired. It allows the sun to heat your home and is often combined with HeatLock technology to maximize performance.

HeatLock® Technology

Our HeatLock coating can increase the energy efficiency of 400 Series windows or patio doors with SmartSun, Low-E4, and PassiveSun glass. Applied to the room side of the glass, it reflects heat back into the home and improves U-Factor values.

Triple-Pane Glass for Patio Doors NEW!

Three panes of glass combine with either argon gas blend or air, and Low-E coatings to provide enhanced energy performance. Adding triple-pane glass to a 400 Series patio door results in a lower U-Factor value than using regular dual-pane glass.

	ENERGY		LIGHT	
GLASS	**U-Factor** How well a product prevents heat from escaping.	**Solar Heat Gain Coefficient** How well a product blocks heat caused by sunlight.	**Visible Light Transmittance** How much visible light comes through a product.	**UV Protection** How well a product blocks ultraviolet rays.
SmartSun™	●●●○	●●●●	●●◐○	●●●●
SmartSun with HeatLock® Technology	●●●◐	●●●●	●●◐○	●●●●
Low-E4	●●●○	●●●○	●●●○	●●●○
Low-E4 with HeatLock Technology	●●●◐	●●●○	●●●○	●●●○
Sun	●●●○	●●●●	●○○○	●●●○
PassiveSun®	●●●○	●○○○	●●●◐	●●○○
PassiveSun with HeatLock Technology	●●●◐	●○○○	●●●◐	●●○○
Clear Dual-Pane	●○○○	○○○○	●●●●	○○○○

Center of glass performance only. Ratings based on glass options as of December 2024. Visit andersenwindows.com/energystar for ENERGY STAR map and ENERGY STAR Most Efficient information. Contact your Andersen supplier for unit NFRC performance values.

"ENERGY STAR" is a registered trademark of the U.S. Environmental Protection Agency.

ADDITIONAL GLASS OPTIONS

Tempered safety glass is standard on patio doors and required for larger window sizes.

Laminated glass is available for added strength, enhanced security and sound control.

Patterned glass lets in light while obscuring vision and adds a unique, decorative touch. Cascade and Reed patterns can be ordered with either a vertical or horizontal orientation.


Cascade


Fern


Obscure


Reed


Satin Etch

STORMWATCH® PROTECTION

Most Andersen 400 Series windows are available with impact-resistant glass and structural upgrades to meet the tough building codes of hurricane-prone coastal areas. Consult your local building code official for requirements in your area.

StormWATCH PROTECTION

Visit **andersenwindows.com/glass** for additional information.

ASK ABOUT ENERGY STAR

TIME-SAVING FILM

We protect our products during delivery and construction with translucent film on the glass that peels away for a virtually spotless window.

GLASS SPACER OPTIONS



Black or white glass spacers are available as a standard offering on all 400 Series products, in addition to stainless steel glass spacers, to provide more ways to customize project designs and achieve a contemporary style. Colored glass spacers blend in with the color of the window or door for a sleek design, or serve as a shadow line.

Add full divided light or full divided light with energy spacer, and the grille spacer bar between the glass will match the selected glass spacer color.


Black


White


Stainless Steel

BLINDS-BETWEEN-THE-GLASS FOR PATIO DOORS



Blinds-between-the-glass are located between the panes of insulated glass, protected from dust and damage, and never need cleaning. Available in white with 400 Series Frenchwood® gliding or hinged inswing patio doors ordered with a pine or prefinished white interior.

ANDERSEN® ART GLASS

With art glass panels from Andersen, you can add interest, create focal points and make your work stand out. They're sized to fit most 400 Series windows and patio doors, and are available in a variety of patterns and colors. Art glass panels are installed on the interior side of the glass using installation brackets. See the Art Glass section starting on page 175, or visit **andersenwindows.com/artglass** for more information.

"ENERGY STAR" is a registered trademark of the U.S. Environmental Protection Agency.

WINDOW HARDWARE*

Window hardware enhances the overall design of a window and harmonizes with a home's décor. That's why we offer a broad range of hardware styles and finishes.

HARDWARE FINISHES

Antique Brass | Black | Bright Brass | Distressed Bronze** | Distressed Nickel | Oil Rubbed Bronze** | Satin Nickel | Stone | White

*Hardware is sold separately, except standard lock and keeper for double-hung windows.
**These are "living" finishes that will change with time and use, see limited warranty for details.
Printing limitations prevent exact replication of finishes. See your Andersen supplier for actual finish samples.









Casement & Awning Windows



CONTEMPORARY FOLDING

Black | Bright Brass | **Oil Rubbed Bronze*** | Satin Nickel | Stone | White



TRADITIONAL FOLDING

Antique Brass | Black | Bright Brass | **Distressed Bronze*** | Distressed Nickel | Oil Rubbed Bronze* | Satin Nickel | Stone | White



CLASSIC SERIES™

Stone | **White**



ESTATE™

Antique Brass | Bright Brass | Distressed Bronze* | **Distressed Nickel** | Oil Rubbed Bronze* | Satin Nickel

Folding handles avoid interference with window treatments.

Gliding Windows



Rotating Sash Handle

Antique Brass | **Black** | Bright Brass | Distressed Bronze* | Distressed Nickel | Oil Rubbed Bronze* | Satin Nickel | Stone | White

Woodwright® Double-Hung Windows



Lock & Keeper

Antique Brass | Black | Bright Brass | Distressed Bronze* | Distressed Nickel | Oil Rubbed Bronze* | **Satin Nickel** | Stone | White

Tilt-Wash Double-Hung Windows



Lock & Keeper

TRADITIONAL

Black | **Stone** | White

Stone finish is standard for pine interiors, and white finish is standard for white interiors. Other finishes are optional.



Optional Lock & Keeper

ESTATE™

Antique Brass | Bright Brass | Distressed Bronze* | Distressed Nickel | Oil Rubbed Bronze* | Satin Nickel

Estate lock and keeper reduces the clear opening height by 19/32" (15). Check with local building code officials to determine compliance with egress requirements.

Bold name denotes finish shown.

Optional sash lifts for Woodwright windows are shown on page 52 and for tilt-wash windows on page 80.

*These finishes are "living finishes" that will change with time and use, see limited warranty for details.
Hardware is sold separately, except standard lock and keeper for double-hung windows.
Printing limitations prevent exact replication of finishes. See your Andersen supplier for actual finish samples.
Dimensions in parentheses are in millimeters.

ANDERSEN® PATIO DOOR HARDWARE*

Andersen offers Yuma,® Encino,® Newbury® and Anvers® patio door hardware options that feature solid drop-forged brass for added strength, while the Albany and Tribeca® hardware options are made of zinc die-cast with durable powder-coated finishes. Additional hardware options such as exterior keyed locks, matching hinge finishes and more are also available.

YUMA®

Distressed Bronze
Distressed Nickel



ENCINO®

Distressed Bronze
Distressed Nickel



NEWBURY®

Antique Brass
Bright Brass
Oil Rubbed Bronze
Satin Nickel



ANVERS®

Bright Brass
Oil Rubbed Bronze
Satin Nickel



ALBANY

Black
Stone
White



TRIBECA®

Black
Stone
White



Bold name denotes finish shown.

HARDWARE FINISHES



Antique Brass | Black | Bright Brass** | Distressed Bronze† | Distressed Nickel | Oil Rubbed Bronze† | Satin Nickel** | Stone | White

*Hardware is sold separately.
**Bright brass and satin nickel finishes have a Physical Vapor Deposition (PVD) finish for improved durability, and feature a 10-year limited warranty.
†These finishes are "living finishes" that will change with time and use, see limited warranty for details.
Mix-and-match interior and exterior style and finish options are available.
Matching hinges are available in most finishes for inswing patio doors.
Printing limitations prevent exact replication of finishes. See your Andersen supplier for actual finish samples.



DESIGNER HARDWARE FOR HINGED PATIO DOORS

PAGES 16-17

DESIGNER HINGED DOOR HARDWARE*

Our designer hardware collections are carefully curated from today's leading hardware brands. They have a luxurious look and substantial feel, and can match perfectly with other hardware and accessories throughout the home. Available on Andersen® hinged patio doors, folding doors and entry doors.

Ashley Norton NEW!
ARCHITECTURAL HARDWARE

All handle styles are available with an urban or traditional escutcheon plate, and in all hardware finishes.



ALESSA

Shown in white medium with urban escutcheon plate.



ALEXIS

Shown in natural bronze with urban escutcheon plate.



APOLLO

Shown in satin nickel with urban escutcheon plate.



ATLAS

Shown in matte black with urban escutcheon plate.



CHURCHILL

Shown in dark bronze with traditional escutcheon plate.



EMPIRE

Shown in polished nickel with traditional escutcheon plate.



MERIDIAN

Shown in white bronze with traditional escutcheon plate.

HARDWARE FINISHES



Dark Bronze** | Dark Oil Rubbed** | Flat Black | Matte Black | Natural Bronze** | Polished Chrome | Polished Nickel** | Satin Nickel | White Bronze** | White Medium**

SCAN TO LEARN MORE

Explore all door hardware options at **andersenwindows.com/doorhardware**.

*Hardware is sold separately, and options vary by product.
**These finishes are "living finishes" that will change with time and use, see limited warranty for details.
Ashley Norton Inc. manufactures and supports the limited warranty for Ashley Norton hardware.
Ashley Norton is a registered trademark of North & Warren, LLC.
Printing limitations prevent exact replication of finishes. See your Andersen supplier for actual finish samples.

BALDWIN NEW!

All styles are available in all hardware finishes.



L021

Shown in satin nickel.



L023

Shown in satin black.



5162

Shown in satin black.



5173

Shown in satin brass.



5455V

Shown in oil rubbed bronze.



5485V

Shown in non-lacquered brass.

HARDWARE FINISHES



Non-Lacquered Brass*
Oil Rubbed Bronze*
Satin Black
Satin Brass**
Satin Nickel**

FSB®



1035

Black Anodized Aluminum

Satin Stainless Steel



1075

Black Anodized Aluminum

Satin Stainless Steel



1076

Black Anodized Aluminum

Satin Stainless Steel



1102

Satin Stainless Steel

HARDWARE **FINISHES**

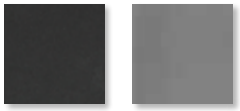

Black Anodized Aluminum
Satin Stainless Steel

Bold name denotes finish shown.

*These finishes are "living finishes" that will change with time and use, see limited warranty for details.
**Satin brass and satin nickel finishes have a Physical Vapor Deposition (PVD) finish for improved durability.
Hardware is sold separately, and options vary by product.
Baldwin Hardware manufactures and supports the limited warranty for Baldwin Estate hardware.

All trademarks where denoted are marks of their respective owners.
Printing limitations prevent exact replication of finishes.
See your Andersen supplier for actual finish samples.

GRILLES

Grille patterns are available in widths and configurations to fit any architectural style, or the taste of any customer. We can match virtually any existing grille pattern, and we'll even work with you and your customers to create custom patterns.

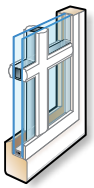

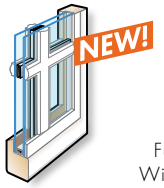

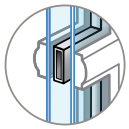

Full Divided Light
With Energy Spacer

Full Divided Light Options*

Permanent grilles on the interior and exterior with a spacer between the glass (left). For improved thermal performance, choose full divided light with an energy spacer (right) — a 3 mm gap around a narrow spacer minimizes transfer of heat and cold to the interior glass.

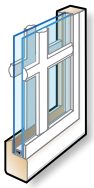

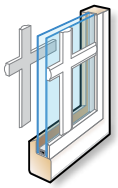

Simulated Divided Light Options

Permanent grilles on the exterior and interior with no spacer between the glass (left). Permanent exterior grilles with removable interior grilles (right) are available in natural wood or prefinished white.

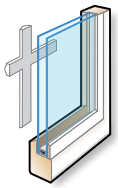

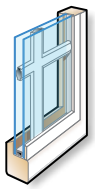

Convenient Cleaning Options

Removable interior grilles come off for easy cleaning (left). Andersen® Finelight™ grilles-between-the-glass** (right) are installed between the glass panes and feature contoured ¾" (19) and 1" (25) profiles.

Grille Bar Widths & Patterns†



¾" (19) ⅞" (22) 1⅛" (29) 2¼" (57)



Actual width shown.

Grilles on casement, awning and Flexiframe® windows ordered with contemporary interior trim stops have a matching contemporary interior grille profile (not shown).

The 2¼" (57) width grille can be positioned horizontally across the center of a casement window to simulate the look of a double-hung window, or simulate a multi-unit combination such as a transom over a window or patio door.

*Full divided light with an energy spacer is available for most products with dual-pane glass, some size and glass restrictions apply. Full divided light and full divided light with an energy spacer are not available for products with triple-pane glass. Contact your Andersen supplier for more information.

**⅞" (22), 1⅛" (29) and 2¼" (57) are not available in Finelight grilles-between-the-glass.

†For all standard patterns available for a specific window or patio door, refer to the detailed product sections in this product guide or contact your Andersen supplier for more information.

Dimensions in parentheses are in millimeters.



INSECT SCREENS

Andersen® TruScene® insect screens provide more than 50% greater clarity than conventional Andersen insect screens for a beautifully unobstructed view. They let in 25% more fresh air;* all while keeping out unwanted small insects.



TRUSCENE INSECT SCREENS

TruScene insect screens are made with a microfine stainless steel mesh and are available for all venting windows. For casement and awning windows, frames are available in white, stone, dark bronze and black, or with a natural pine veneer that can be stained to match the window. Frames for all other windows are installed on the exterior of the window and match the unit's exterior color.



Pine | White | Stone | Dark Bronze | Black

CONVENTIONAL INSECT SCREENS

Conventional insect screen frames are available in white, stone, dark bronze and black for casement and awning windows. Insect screen frames for all other windows and patio doors are installed on the exterior of the window or door, and match the unit's exterior color.

INSECT SCREEN CONFIGURATIONS

Windows



Full insect screens for casement, awning, double-hung and gliding windows. Half insect screen for the lower sash of double-hung windows.

Gliding Patio Doors



Premium retractable screen for two- and four-panel doors.

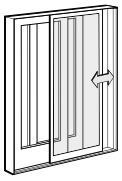

Gliding screen for two- and four-panel doors.

Hinged Inswing Patio Doors

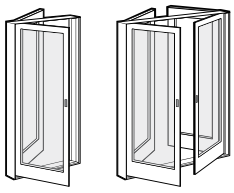

Hinged screen for single-panel doors. Double-hinged screens for two-panel doors when both panels open.

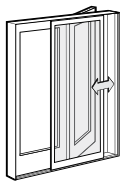

Gliding screen for two- and three-panel doors.

*TruScene insect screens let in over 25% more fresh air than standard Andersen fiberglass insect screens.

COMPARISON CHART

Use the quick reference chart below to decide which Andersen® products best fit your project needs.

FEATURES	400 SERIES WINDOWS					400 SERIES PATIO DOORS	
	Casement & Awning	Woodwright® Double-Hung	Tilt-Wash Double-Hung	Narroline® Conversion Kit	Gliding	Frenchwood® Gliding	Frenchwood Hinged Inswing
Low-Maintenance Exteriors							
White	●	●	●	●	●	●	●
Canvas	●	●	●		●		
Sandtone	●	●	●	●	●	●	●
Terratone	●	●	●	●	●	●	●
Dark Bronze	●	●	●		●		
Forest Green	●	●	●		●	●	●
Black	●	●	●		●		
Interiors							
Pine	●	●	●	●	●	●	●
Maple		●				●	●
Oak		●				●	●
White	●	●	●	●	●	●	●
Sandtone					●		
Dark Bronze	●		●		●		
Black	●		●		●		
Easy Cleaning							
Tilt-to-Clean Sash		●	●	●			
Dual-Pane Glass Additional dual-pane glass options are available. See pages 10-11 for details. Glass options for doors are tempered.							
Low-E4®	●	●	●	●	●	●	●
Low-E4 SmartSun™	●	●	●	●	●	●	●
Low-E4 Sun	●	●	●	●	●	●	●
Low-E4 PassiveSun®	●	●	●	●	●	●	●
HeatLock® Coating	●	●	●	●	●	●	●
Triple-Pane Glass See patio door product sections for triple-pane glass options. Glass options for doors are tempered.							
Triple-Pane Glass						●	●
Glass Spacers							
Black, White and Stainless Steel	●	●	●	●	●	●	●
Grilles & Blinds							
Full Divided Light*	●	●	●	●	●	●	●
Full Divided Light With Energy Spacer*	●	●	●	●	●	●	●
Simulated Divided Light	●	●	●	●	●	●	●
Removable Interior Grilles	●	●	●	●	●	●	●
Finelight™ Grilles-Between-the-Glass	●	●	●	●	●	●	●
Blinds-Between-the-Glass						●	●
Performance Options							
Performance Grade (PG) Upgrade	●	●	●				
Stormwatch® Protection	●		●				
Standard Sizes**							
Minimum Width	1'-5"	1'-9 5/8"	1'-9 5/8"	Fits Narroline double-hung windows made from 1968 to 2013.	2'-11 1/4"	4'-11 1/4"	2'-6 1/8"
Maximum Width	2'-11 15/16"	3'-9 5/8"	3'-9 5/8"		5'-11 1/4"	15'-9"	8'-11 1/8"
Minimum Height	2'-0 1/8"	3'-0 7/8"	3'-0 7/8"		1'-10 1/4"	6'-7 1/2"	6'-7 1/2"
Maximum Height	5'-11 7/8"	6'-4 7/8"	7'-8 7/8"		4'-11 1/4"	7'-11 1/2"	7'-11 1/2"
Custom Sizes	●	●	●			●	●

*Full divided light with an energy spacer is available for most products with dual-pane glass, some size and glass restrictions apply. Full divided light and full divided light with an energy spacer are not available for products with triple-pane glass. Contact your Andersen supplier for more information.

**Standard size dimensions do not apply to insert or replacement windows. See the insert window product sections for custom size minimum and maximum dimensions.

400 Series complementary casement and specialty windows and complementary curved top patio doors are not included in the chart. See the individual product sections for details.



CASEMENT & AWNING WINDOWS

Alignment Grid 24-25
Tables of Sizes 26-30
Specifications 31-34
Custom Sizes 35
Grille Patterns 36
Window Details 36-39
Joining Details 40
Combination Designs 183
Product Performance 199

CUSTOM SIZING
in ⅛" (3) increments

CUSTOM SIZES

Dimensions in parentheses are in millimeters.

FEATURES

FRAME

A A seamless one-piece Perma-Shield® rigid vinyl frame cover is secured to the exterior of the wood frame to protect it from moisture and maintain an attractive appearance while minimizing maintenance.

B The seamless rigid vinyl frame cover extends 1 3/8" (35) around the perimeter of the unit, creating an installation flange to help seal the unit to the structure.

C Wood frame members are treated with a water-repellent preservative for long-lasting* protection and performance.

D Traditional or contemporary interior trim stops are unfinished pine. Low-maintenance prefinished white, dark bronze and black** interiors are also available. Matching contemporary grilles are available for windows with contemporary stops.

SASH

E Rigid vinyl encases the entire sash, and a vinyl weld protects each sash corner for superior weathertightness. This maintains an attractive appearance and minimizes maintenance.

F Wood core members provide excellent structural stability and energy efficiency.

G Vinyl closed-cell foam weatherstrip is factory installed on the perimeter of the sash.

GLASS

H Glass spacers are available in black, stainless steel and white.

I A glazing bead and silicone provide superior weathertightness and durability.

J High-Performance glass options include:

- Low-E4® glass
- Low-E4 HeatLock® glass
- Low-E4 SmartSun™ glass
- Low-E4 SmartSun HeatLock glass
- Low-E4 Sun glass
- Low-E4 PassiveSun® HeatLock glass

Tempered and other glass options are available. Contact your Andersen supplier.

A removable translucent film helps shield the glass from damage during delivery and construction, and simplifies finishing at the job site.

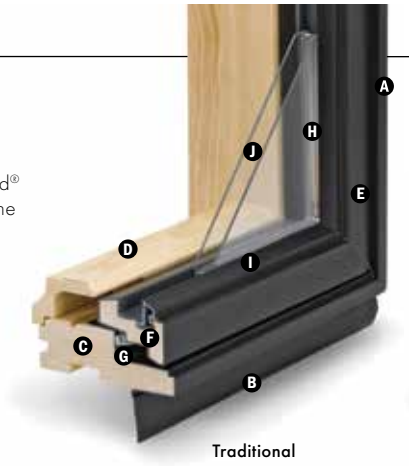

Traditional



Contemporary

Patterned Glass

Patterned glass options are available. See page 11 for more details.

HARDWARE

Smooth Control Hardware System



The smooth control hardware system employs a worm gear drive for easy operation. Units with wash mode have hinges that move the sash away from the frame to provide easier glass cleaning. CXW15, CXW155, CXW16 and CXW25 sizes are not available with wash mode. Hardware style and finish must be specified. Operator handle and cover are sold separately.

Single-Action Casement Lock



On casement windows, a single-action lock easily releases all concealed locking points on the sash, while the reach-out action eliminates binding when closing. The lock handle finish matches the specified hardware finish.

*Visit andersenwindows.com/warranty for details.

**Products with dark bronze or black interiors have matching exteriors.

†These finishes are "living finishes" that will change with time and use, see limited warranty for details.

Naturally occurring variations in grain, color and texture of wood make each window one of a kind. All wood interiors are unfinished unless a finish is specified.

Printing limitations prevent exact replication of colors and finishes. See your Andersen supplier for actual color and finish samples.

Dimensions in parentheses are in millimeters.

EXTERIORS & INTERIORS

EXTERIOR COLORS


White | Canvas | Sandtone | Terratone


Dark Bronze | Forest Green | Black

INTERIOR OPTIONS

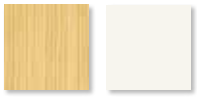
Pine | White


Dark Bronze** | Black**

HARDWARE Sold Separately



CONTEMPORARY FOLDING

Black | Bright Brass
Oil Rubbed Bronze | Satin Nickel
Stone | White



TRADITIONAL FOLDING

Antique Brass | Black
Bright Brass | Distressed Bronze
Distressed Nickel | Oil Rubbed Bronze
Satin Nickel | Stone | White

Folding handles avoid interference with window treatments.



CLASSIC SERIES™

Stone | **White**



ESTATE™

Antique Brass | **Bright Brass**
Distressed Bronze | Distressed Nickel
Oil Rubbed Bronze | Satin Nickel

Bold name denotes finish shown.

HARDWARE FINISHES


Antique Brass | Black | Bright Brass | Distressed Bronze† | Distressed Nickel


Oil Rubbed Bronze† | Satin Nickel | Stone | White

ACCESSORIES Sold Separately

Awning Sash Locks



Awning sash locks provide an added measure of security and weathertightness. Hardware style and finish options are compatible with Andersen casement windows to ensure consistency in appearance when used in combination designs.

PERFORMANCE OPTIONS

Performance Grade (PG) Upgrades

PG upgrade is available for select sizes of standard non-impact casement and awning windows, allowing these units to achieve higher performance ratings. PG ratings are more comprehensive than Design Pressure (DP) ratings for measuring product performance. For up-to-date performance information of individual products, visit **andersenwindows.com**. Contact your Andersen supplier for availability.

Coastal Windows

400 Series casement and awning windows are available with Stormwatch® Protection. Visit **andersenwindows.com/coastal** or refer to the Andersen 400 Series Coastal Product Guide for more information.

StormWATCH PROTECTION

CAUTION: Painting and staining may cause damage to rigid vinyl. Andersen does not warrant the adhesion or performance of homeowner-applied paint over vinyl or other factory-coated surfaces. For vinyl painting instructions and preparation, contact your Andersen supplier. Do not paint weatherstrip. Creosote-based stains should not come in contact with Andersen products. Abrasive cleaners or solutions containing corrosive solvents should not be used on Andersen products. See page 223 for a complete list of cautions.

*Visit andersenwindows.com/warranty for details.
**TruScene insect screens let in over 25% more fresh air than standard Andersen fiberglass insect screens.
Dimensions in parentheses are in millimeters.

FRAME

Extension Jambs





The base jamb depth is 2 7/8" (73). Extension jambs are available in unfinished pine, maple and oak, or prefinished white, dark bronze and black. Some sizes may be veneered.

Factory-applied and non-applied extension jambs are available in 1/16" (1.5) increments between 4 9/16" (116) and 7 1/8" (181). Extension jambs can be factory applied to either three sides (stool and apron) or four sides (picture frame casing).

For overall jamb depths greater than 7 1/8" (181), interior extension jambs are available in 1/16" (1.5) increments between 7 1/8" (181) and 9" (229) for field application. They are available in 8' (2438) and 12' (3658) lineals.

Thick Replacement Extension Jambs

To help preserve original alignment of trim and paint lines in replacement situations, special 1 1/8" (29)-thick replacement extension jambs are available. Factory-applied and non-applied extension jambs are available in 1/16" (1.5) increments between 4 9/16" (116) and 7 1/8" (181). Non-applied extension jambs are available in 12' (3658) lineals. Shown on page 43. Detail on page 36.

Drywall Return Bead



A narrow or wide drywall return bead is available with unfinished pine, or prefinished white, dark bronze and black interiors. Can be ordered factory applied or in non-applied lineals. Detail on page 36.

HARDWARE

Corrosion-Resistant Components

Corrosion-resistant hinge and operator arm hardware is designed for applications in harsh and corrosive environments such as heavy industrial or coastal areas.*

Window Opening Control Device



A window opening control device is available, which limits sash travel to less than 4" (102) when the window is first opened. Available factory applied, or as a field-applied kit in black, stone and white.

Power Operator for Awning Windows



Awning windows can be ordered with an operator enhanced by PowerAssist™ technology that opens and closes the window with the touch of a button, and eliminates the need for sash locks. Easy to install, the 24-volt system features a concealed window power drive, battery backup and a moisture sensor that closes the window when it rains. It is controlled by a wall-mounted console that includes a power box, battery, touch pad and mounting bracket. A remote control is sold separately. Windows can be ordered factory prepped or as a field-applied kit. Power driver requires field installation. Available for windows up to 5' (1524) wide. Not available for windows with Stormwatch Protection or PG upgrade.

SPECIAL OPERATOR HANDLES

Available in Classic Series™ design only.

Compact Operator Handle



Specially designed for situations where window treatments interfere with handle operation. Available in a stone or white finish.

Operator Spline Cover



An operator spline cover is an attractive cap that covers the roto operator stud when the handle that controls access or operation of the window has been removed. The operator spline cover should not be used on any window designated or intended for emergency escape or rescue. Consult your local building code official for egress code requirements in your area.

Metal T-Handle



Our smallest operator handle, the metal T-handle, may make it more difficult for young children aged 5 and under to open the window. For more information on child safety, write:

Andersen Corporation
LookOut For Kids® Program
100 Fourth Avenue North
Bayport, MN 55003
Call: 800-313-8889
Email: lofk@andersencorp.com
Website: andersenwindows.com/windowsafety

Easy-Grip Handle

A larger knob makes it easier to grip and operate. Available in a stone or white finish.



ANDERSEN® ART GLASS

Andersen art glass panels come in a variety of original patterns. For more information, see the Art Glass section starting on page 175 or visit **andersenwindows.com/artglass**.

INSECT SCREENS

TruScene® Insect Screens



Our TruScene insect screens let in over 25% more fresh air** and provide 50% greater clarity than conventional Andersen insect screens, all while keeping out unwanted small insects. For casement and awning windows, frames are available in white, stone, dark bronze and black, or with pine veneer frame interiors to blend with the wood interior of the window.

Conventional Insect Screens

Conventional insect screens have charcoal gray powder-coated aluminum screen mesh. Frames are available in white, stone, dark bronze and black.

GRILLES & EXTERIOR TRIM

Grilles are available in a variety of configurations and widths. See page 18 for details. Available with Andersen exterior trim. See the Exterior Trim section starting on page 177.

Alignment Grid for Casement, Awning, Casement/Awning Picture and Transom, and Specialty Windows

	1'-5" (432)	1'-8 1/2" (521)	2'-0 1/8" (613)	2'-4 3/8" (721)	2'-7 1/2" (800)	2'-9 3/4" (857)	2'-11 15/16" (913)	3'-4 3/4" (1035)	3'-4 13/16" (1037)	4'-0" (1219)
Specialty See the Specialty Window section starting on page 119 for these and other specialty shapes and sizes.			AFC106 AFC11 CTQC1 CTC1	AFCW106 AFCW11 CTQCW1 CTCW1	CTQCX1 CTCX1		AFCP3006 AFCP301 CTQA3 CTCXW1			AFC206 AFC21 CTC2
Casement/Awning Transom										
1'-0" (305)	CTR1510	CTR1810	CTR2010	CTR2410	CTR2810	CTR2910	CTR3010 PTR3010	CTR3410 CTR21810	PTR3510	CTR4010 CTR22010 PTR4010
Awning										
1'-5" (432) 1'-8 1/2" (521) 2'-0 1/8" (613) 2'-4 3/8" (721) 2'-7 1/2" (800) 2'-11 15/16" (913) 3'-4 3/4" (1035)			AR21 AN21 A21 AW21	AR251 AN251 A251 AW251 AX251	AR281 AN281 A281 AW281 AX281 AXW281		AR31 AN31 A31 AW31 AX31 AXW31 A335		AR351 AN351 A351 AW351 AX351 AXW351 A3535	AR41 AN41 A41 AW41 AX41 AXW41 AR221 AN221 A221 AW221
Casement, Awning and Casement/Awning Picture										
2'-0 1/8" (613)	CR12	CN12	C12	CW12				CN22		C22
2'-4 3/8" (721)	CR125	CN125	C125	CW125	CX125			CN225		C225
2'-11 15/16" (913)	CR13	CN13	C13	CW13	CX13	CR23	CXW13	CN23	P3530	C23	P4030
3'-4 13/16" (1037)	CR135	CN135	C135	CW135	CX135	CR235	CXW135	CN235	P3535	C235	P4035
4'-0" (1219)	CR14	CN14	C14	A212	CW14	CX14	CR24	CXW14	A312	AP32V	P3040	CN24	AP352V	P3540	C24	AP42V	P4040
4'-4 13/16" (1341)	CR145	CN145	C145	CW145	CX145	CR245	CXW145	P3045	CN245	P3545	C245	P4045
4'-11 7/8" (1521)	CR15	CN15	C15	CW15	CX15	CR25	CXW15	PA3050*	P3050	CN25	PA3550*	P3550	C25	P4050
5'-4 13/16" (1646)	CR155	CN155	C155	A213	CW155	CX155	CR255	CXW155	P3055	CN255	P3555	C255	P4055
5'-11 7/8" (1826)	CR16	CN16	C16		CW16	CX16	CR26	CXW16	PA3060	AXW312**	A313	P3060	CN26	PA3560	P3560	C26	PA4060	P4060

*Dimensions in parentheses are in millimeters.
*Actual height of 4'-11 13/16" (1519).
**Actual height of 5'-11 5/8" (1819).

4'-4 13/16" (1341)	4'-8 1/2" (1435)	4'-11 7/8" (1521)	5'-1" (1549)	5'-2 3/4" (1594)	5'-4 13/16" (1646)	5'-11 5/8" (1819)	5'-11 7/8" (1826)		7'-0 5/8" (2149)
	AFCW206 AFCW21								
	CTCW2			CTCX2			CTC3		
PTR4510	CTR4810 CTR22410	PTR5010	CTR5110 CTR31810	CTR5210 CTR22810	PTR5510	CTR51110 CTR23010	CTR6010 CTR32010	PTR6010	CTR7010 CTR32410
AR451 AN451 A451 AW451 AX451 AXW451	AR2251 AN2251 A2251 AW2251 AX2251	AR51 AN51 A51 AW51 AX51 AXW51		AR2281 AN2281 A2281 AW2281 AX2281 AXW2281	AR551 AN551 A551 AW551 AX551 AXW551	AR231 AN231 A231 AW231 AX231 AXW231	AR61 AN61 A61 AW61 AX61 AXW61	AR321 AN321 A321 AW321	AR3251 AN3251 A3251 AW3251 AX3251
	CW22 CW225		CN32 CN325				C32 C325		CW32 CW325
P4530 P4535 P4540 P4545 P4550 P4555 P4560	CW23 CW235 CW24 CW245 CW25 CW255 CW26	P5030 P5035 P5040 P5045 P5050 P5055 P5060	CN33 CN335 CN34 CN345 CN35	CX23 CX235 CX24 CX245 CX25	P5530 P5535 P5540 P5545 P5550	CXW23 CXW235 CXW24 CXW245 CXW25	C33 C335 C34 C345 C35	P6030 P6035 P6040 P6045 P6050	CW33 CW335 CW34 CW345 CW35

• Dimensions in parentheses are in millimeters.

Similar jamb profiles enable these standard-size windows to be combined in multiple combinations. Custom-size windows are also available.

Window widths and heights shown. See individual size charts for additional dimensions.

In addition to venting configurations shown, other standard configurations are available.

Table of Sizes for Casement and Casement/Awning Transom Windows

Scale 1/8" (3) = 1'-0" (305) – 1:96

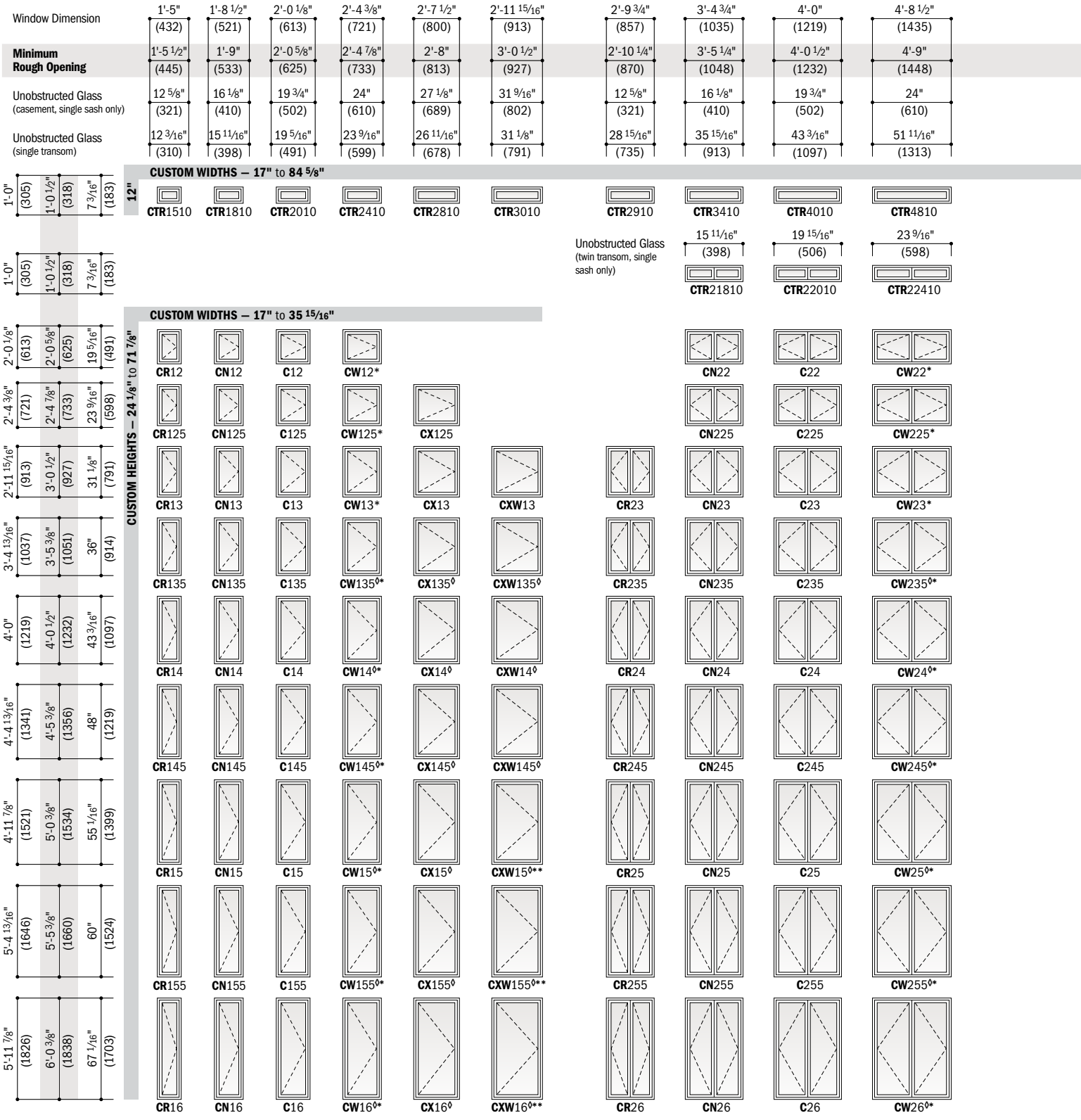

- Window Dimension always refers to outside frame-to-frame dimension.
- **Minimum Rough Opening dimensions may need to be increased to allow for use of building wraps, flashing, sill panning, brackets, fasteners or other items. See pages 222-223 for more details.**
- Dimensions in parentheses are in millimeters.

◊Meets or exceeds clear opening area of 5.7 sq. ft. or 0.53 m², clear opening width of 20" (508) and clear opening height of 24" (610) with appropriate hinge specified. See tables on pages 31-32.

*Meets clear opening width of 20" (508) using hinge with wash mode and control bracket (bracket can be pivoted for cleaning position) and meets clear opening width of 22" (559) using hinge for widest clear opening.

**Available with straight-arm operators (hinged for widest clear opening) only.

5'-2 3/4" (1594)	5'-11 5/8" (1819)	5'-1" (1549)	5'-11 7/8" (1826)	7'-0 5/8" (2149)
5'-3 1/4" (1607)	6'-0 1/8" (1832)	5'-1 1/2" (1562)	6'-0 3/8" (1838)	7'-1 1/8" (2162)
27 1/8" (689)	31 9/16" (802)	16 1/8" (410)	19 3/4" (502)	24" (610)
57 15/16" (1472)	66 13/16" (1697)	56 3/16" (1427)	67 1/16" (1703)	79 13/16" (2027)

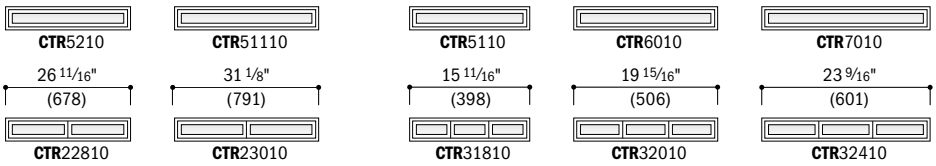

26 11/16" (678)	31 1/8" (791)	15 11/16" (398)	19 15/16" (506)	23 9/16" (601)

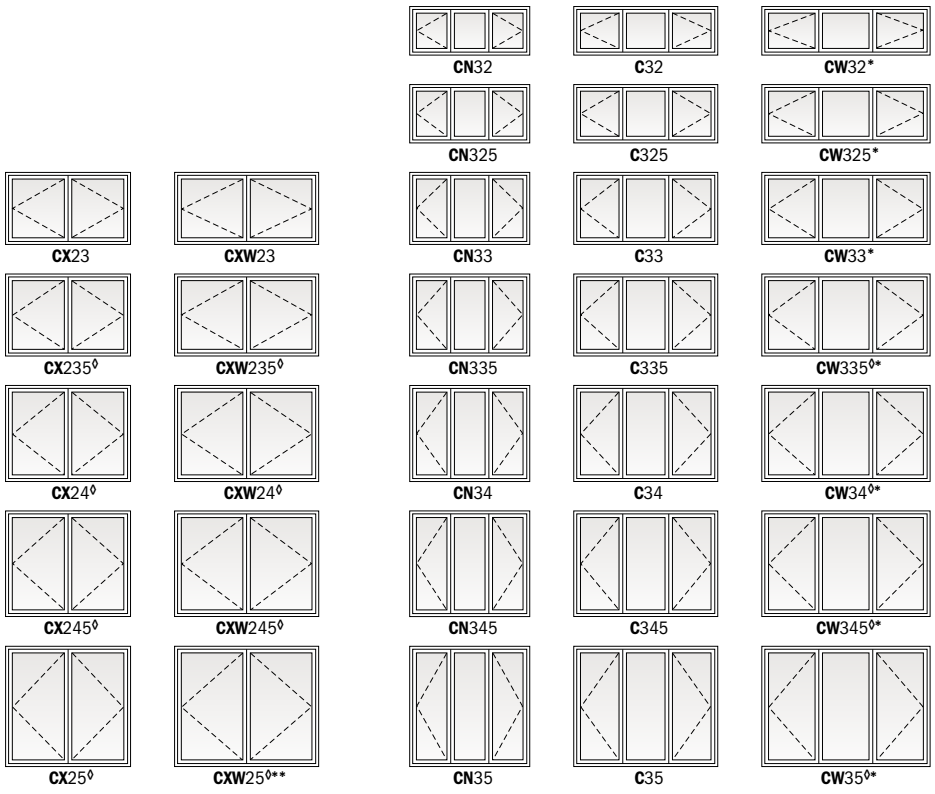



Custom-size windows are available in 1/8" (3) increments. Windows can also be custom sized to match standard sizes ending in 1/16" (1.5). **Single windows only.** See page 35 for custom sizes and specifications.

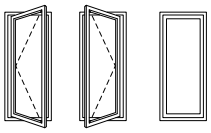

Choose left, right or stationary as viewed from the exterior. In addition to venting shown in table, other standard configurations are available for single, twin and triple windows. Transom (**CTR**) windows are stationary only.

Twin and triple windows shown have one continuous outer frame.

Transom (CTR) windows can be used over casement or awning windows, and may be rotated 90° and used as a sidelight with casement, awning or picture windows.

Available with traditional or contemporary trim stops. Grille patterns shown on page 36. Details shown on pages 36-39.

- Window Dimension always refers to outside frame-to-frame dimension.
- **Minimum Rough Opening dimensions may need to be increased to allow for use of building wraps, flashing, sill panning, brackets, fasteners or other items. See pages 222-223 for more details.**
- Dimensions in parentheses are in millimeters.

◊Meets or exceeds clear opening area of 5.7 sq. ft. or 0.53 m², clear opening width of 20" (508) and clear opening height of 24" (610) with appropriate hinge specified. See tables on pages 31-32.
*Meets clear opening width of 20" (508) using hinge with wash mode and control bracket (bracket can be pivoted for cleaning position) and meets clear opening width of 22" (559) using hinge for widest clear opening.
**Available with straight-arm operators (hinged for widest clear opening) only.

Table of Sizes for Awning Windows

Scale 1/8" (3) = 1'-0" (305) – 1:96

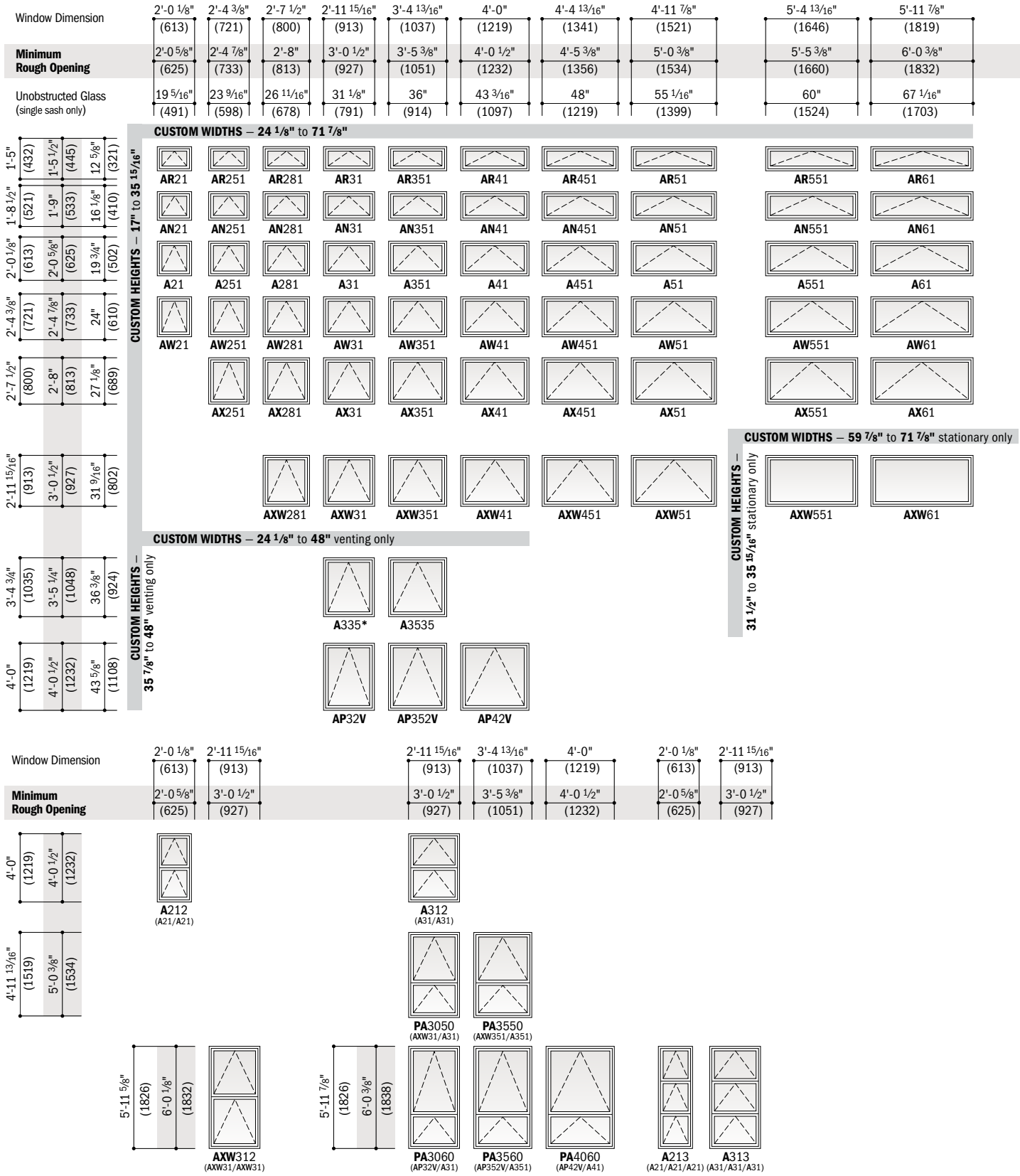

- Window Dimension always refers to outside frame-to-frame dimension.
- **Minimum Rough Opening dimensions may need to be increased to allow for use of building wraps, flashing, sill panning, brackets, fasteners or other items. See pages 222-223 for more details.**
- Dimensions in parentheses are in millimeters.
- *Clear opening area of 5.7 sq. ft. or 0.53 m^2, and clear opening height of 26 1/2" (673) can be obtained by detaching operator from sash.

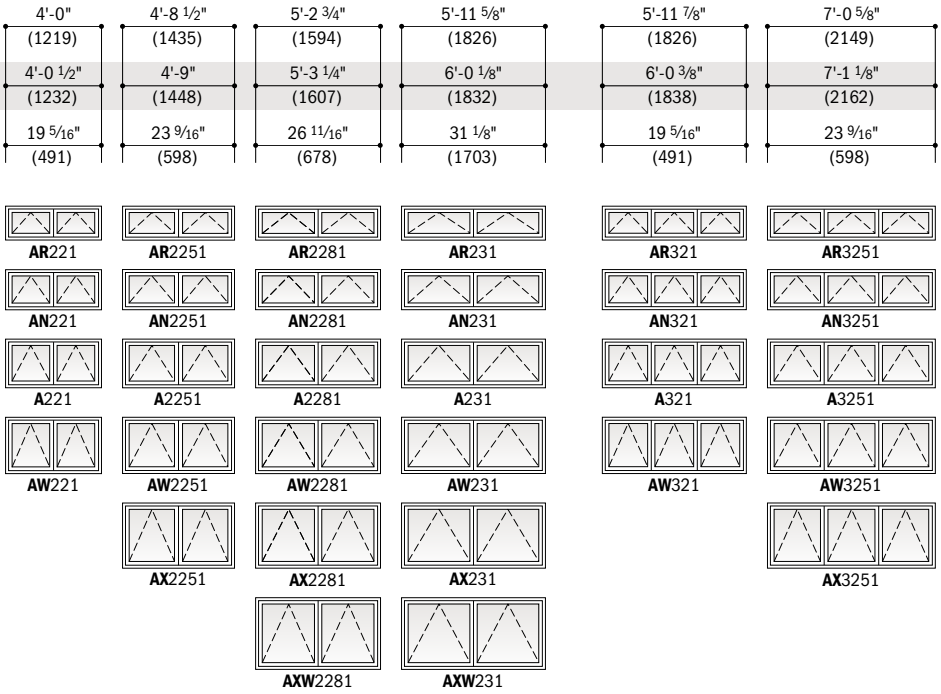

Custom-size windows are available in 1/8" (3) increments. Windows can also be custom sized to match standard sizes ending in 1/16" (1.5). **Single windows only.** See page 35 for custom sizes and specifications.

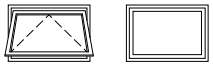

Venting Stationary

Choose venting or stationary. **AXW**551 and **AXW**61 windows are stationary only. In addition to venting shown in table, other standard configurations are available for twin, triple and stacked windows.

Twin, triple and stacked windows shown have one continuous outer frame.

Awning windows must be installed to vent as shown, and should not be rotated and used as a hopper.

Transom (**CTR**) windows (shown on pages 26-27) can be used over casement or awning windows, and may be rotated 90° and used as a sidelight with casement, awning or picture windows.

Available with traditional or contemporary trim stops. Grille patterns shown on page 36. Details shown on pages 36-39.

- Window Dimension always refers to outside frame-to-frame dimension.
- **Minimum Rough Opening dimensions may need to be increased to allow for use of building wraps, flashing, sill panning, brackets, fasteners or other items. See pages 222-223 for more details.**
- Dimensions in parentheses are in millimeters.

Table of Sizes for Casement/Awning Picture and Transom Windows

Scale 1/8" (3) = 1'-0" (305) – 1:96

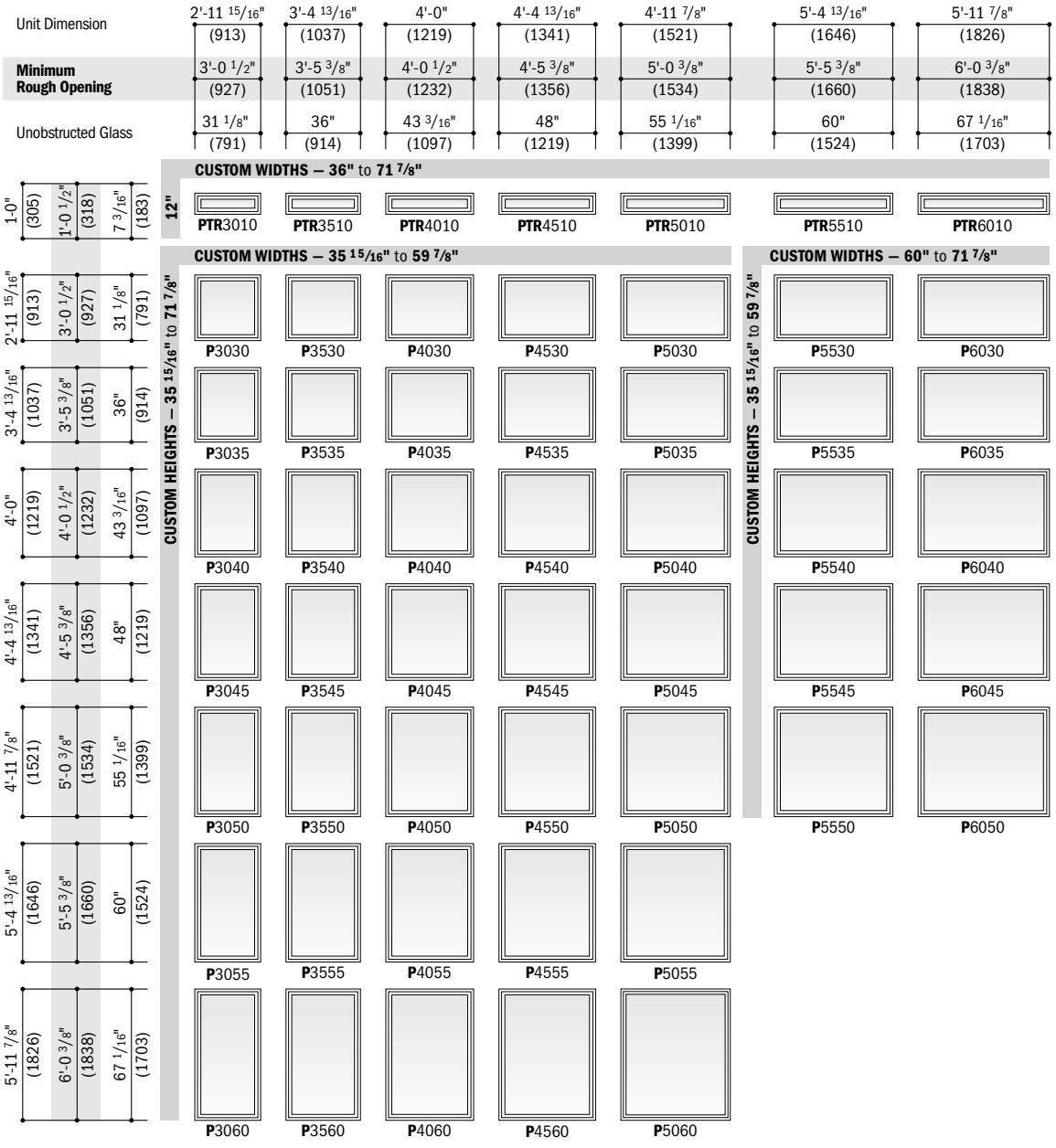

Custom-size windows are available in 1/8" (3) increments. Windows can also be custom sized to match standard sizes ending in 1/16" (1.5). See page 35 for custom sizes and specifications.

Picture (P) and transom (PTR) windows may be rotated 90° to align with casement or awning windows.

Available with traditional or contemporary trim stops. Grille patterns shown on page 36. Details shown on pages 36-39.

- Window Dimension always refers to outside frame-to-frame dimension.
- **Minimum Rough Opening dimensions may need to be increased to allow for use of building wraps, flashing, sill panning, brackets, fasteners or other items. See pages 222-223 for more details.**
- Dimensions in parentheses are in millimeters.

Opening and Area Specifications for Casement Windows

Window Number	Clear Opening Area		Clear Opening in Full Open Position			Glass Area	Vent Area		Top of Subfloor to Top of Inside Sill Stop	Overall Window Area
	Hinge for Widest Clear Opening Sq. Ft./(m²)	Hinge with Wash Mode Sq. Ft./(m²)	Hinge for Widest Clear Opening Inches/(mm)	Hinge with Wash Mode Inches/(mm)	Height Inches/(mm)	Sq. Ft./(m²)	Hinge for Widest Clear Opening Sq. Ft./(m²)	Hinge with Wash Mode Sq. Ft./(m²)	Inches/(mm)	Sq. Ft./(m²)
CR12	–	1.0 (0.09)	–	7 5/16" (186)	19 1/4" (489)	1.7 (0.16)	–	1.5 (0.14)	60 9/16" (1538)	2.8 (0.26)
CR125	–	1.2 (0.11)	–	7 5/16" (186)	23 7/16" (595)	2.0 (0.19)	–	1.8 (0.17)	56 3/8" (1432)	3.3 (0.31)
CR13	–	1.6 (0.15)	–	7 5/16" (186)	31 1/16" (789)	2.7 (0.25)	–	2.4 (0.22)	48 3/4" (1238)	4.2 (0.39)
CR135	–	1.8 (0.17)	–	7 5/16" (186)	35 15/16" (913)	3.1 (0.29)	–	2.7 (0.25)	43 7/8" (1114)	4.8 (0.45)
CR14	–	2.2 (0.20)	–	7 5/16" (186)	43 1/8" (1095)	3.8 (0.35)	–	3.3 (0.31)	36 11/16" (932)	5.7 (0.53)
CR145	–	2.4 (0.22)	–	7 5/16" (186)	47 15/16" (1218)	4.2 (0.39)	–	3.6 (0.33)	31 7/8" (810)	6.2 (0.58)
CR15	–	2.8 (0.26)	–	7 5/16" (186)	55" (1397)	4.8 (0.45)	–	4.2 (0.39)	24 13/16" (630)	7.1 (0.66)
CR155	–	3.1 (0.29)	–	7 5/16" (186)	59 15/16" (1522)	5.2 (0.48)	–	4.5 (0.42)	19 7/8" (505)	7.7 (0.72)
CR16	–	3.4 (0.32)	–	7 5/16" (186)	67" (1702)	5.9 (0.55)	–	5.1 (0.47)	12 13/16" (325)	8.5 (0.79)
CR23	–	1.6 (0.15)	–	7 5/16" (186)	31 1/16" (789)	5.4 (0.50)	–	4.7 (0.44)	48 3/4" (1238)	8.4 (0.78)
CR235	–	1.8 (0.17)	–	7 5/16" (186)	35 15/16" (913)	6.3 (0.59)	–	5.4 (0.50)	43 7/8" (1114)	9.6 (0.89)
CR24	–	2.2 (0.20)	–	7 5/16" (186)	43 1/8" (1095)	7.6 (0.71)	–	6.5 (0.60)	36 11/16" (932)	11.3 (1.05)
CR245	–	2.4 (0.22)	–	7 5/16" (186)	47 15/16" (1218)	8.4 (0.78)	–	7.3 (0.68)	31 7/8" (810)	12.4 (1.15)
CR25	–	2.8 (0.26)	–	7 5/16" (186)	55" (1397)	9.6 (0.89)	–	8.3 (0.77)	24 13/16" (630)	14.2 (1.32)
CR255	–	3.1 (0.29)	–	7 5/16" (186)	59 15/16" (1522)	10.5 (0.98)	–	9.1 (0.85)	19 7/8" (505)	15.4 (1.43)
CR26	–	3.4 (0.32)	–	7 5/16" (186)	67" (1702)	11.7 (1.09)	–	10.2 (0.95)	12 13/16" (325)	17.0 (1.58)
CN12	–	1.5 (0.14)	–	10 13/16" (275)	19 1/4" (489)	2.2 (0.20)	–	1.9 (0.18)	60 9/16" (1538)	3.4 (0.32)
CN125	–	1.8 (0.17)	–	10 13/16" (275)	23 7/16" (595)	2.6 (0.24)	–	2.3 (0.21)	56 3/8" (1432)	4.0 (0.37)
CN13	–	2.3 (0.21)	–	10 13/16" (275)	31 1/16" (789)	3.5 (0.33)	–	3.1 (0.29)	48 3/4" (1238)	5.1 (0.47)
CN135	–	2.7 (0.25)	–	10 13/16" (275)	35 15/16" (913)	4.0 (0.37)	–	3.6 (0.33)	43 7/8" (1114)	5.8 (0.54)
CN14	–	3.2 (0.30)	–	10 13/16" (275)	43 1/8" (1095)	4.8 (0.45)	–	4.3 (0.40)	36 11/16" (932)	6.8 (0.63)
CN145	–	3.6 (0.33)	–	10 13/16" (275)	47 15/16" (1218)	5.4 (0.50)	–	4.8 (0.45)	31 7/8" (810)	7.5 (0.70)
CN15	–	4.1 (0.38)	–	10 13/16" (275)	55" (1397)	6.2 (0.58)	–	5.5 (0.51)	24 13/16" (630)	8.5 (0.79)
CN155	–	4.5 (0.42)	–	10 13/16" (275)	59 15/16" (1522)	6.7 (0.62)	–	6.0 (0.56)	19 7/8" (505)	9.2 (0.86)
CN16	–	5.0 (0.47)	–	10 13/16" (275)	67" (1702)	7.5 (0.70)	–	6.7 (0.62)	12 13/16" (325)	10.2 (0.95)
CN22	–	1.5 (0.14)	–	10 13/16" (275)	19 1/4" (489)	4.4 (0.41)	–	3.8 (0.35)	60 9/16" (1538)	6.8 (0.63)
CN225	–	1.8 (0.17)	–	10 13/16" (275)	23 7/16" (595)	5.2 (0.48)	–	4.6 (0.43)	56 6/16" (1432)	8.0 (0.74)
CN23	–	2.3 (0.21)	–	10 13/16" (275)	31 1/16" (789)	7.0 (0.65)	–	6.2 (0.58)	48 3/4" (1238)	10.2 (0.95)
CN235	–	2.7 (0.25)	–	10 13/16" (275)	35 15/16" (913)	8.0 (0.74)	–	7.2 (0.67)	43 7/8" (1114)	11.5 (1.07)
CN24	–	3.2 (0.30)	–	10 13/16" (275)	43 1/8" (1095)	9.7 (0.90)	–	8.6 (0.80)	36 11/16" (932)	13.6 (1.26)
CN245	–	3.6 (0.33)	–	10 13/16" (275)	47 15/16" (1218)	10.7 (0.99)	–	9.6 (0.89)	31 7/8" (810)	15.0 (1.39)
CN25	–	4.1 (0.38)	–	10 13/16" (275)	55" (1397)	12.3 (1.14)	–	11.0 (1.02)	24 13/16" (630)	16.9 (1.57)
CN255	–	4.5 (0.42)	–	10 13/16" (275)	59 15/16" (1522)	13.4 (1.25)	–	12.0 (1.12)	19 7/8" (505)	18.4 (1.71)
CN26	–	5.0 (0.47)	–	10 13/16" (275)	67" (1702)	15.0 (1.39)	–	13.4 (1.25)	12 13/16" (325)	20.3 (1.89)
CN32	–	1.5 (0.14)	–	10 13/16" (275)	19 1/4" (489)	6.6 (0.61)	–	3.8 (0.35)	60 9/16" (1538)	10.2 (0.95)
CN325	–	1.8 (0.17)	–	10 13/16" (275)	23 7/16" (595)	7.8 (0.73)	–	4.6 (0.43)	56 3/8" (1432)	12.0 (1.12)
CN33	–	2.3 (0.21)	–	10 13/16" (275)	31 1/16" (789)	10.5 (0.98)	–	6.2 (0.58)	48 3/4" (1238)	15.3 (1.42)
CN335	–	2.7 (0.25)	–	10 13/16" (275)	35 15/16" (913)	12.0 (1.12)	–	7.2 (0.67)	43 7/8" (1114)	17.4 (1.62)
CN34	–	3.2 (0.30)	–	10 13/16" (275)	43 1/8" (1095)	14.4 (1.34)	–	8.6 (0.80)	36 11/16" (932)	20.4 (1.90)
CN345	–	3.6 (0.33)	–	10 13/16" (275)	47 15/16" (1218)	16.2 (1.51)	–	9.6 (0.89)	31 7/8" (810)	22.5 (2.09)
CN35	–	4.1 (0.38)	–	10 13/16" (275)	55" (1397)	18.6 (1.73)	–	11.0 (1.02)	24 13/16" (630)	25.5 (2.37)
CN355	–	4.5 (0.42)	–	10 13/16" (275)	59 15/16" (1522)	20.1 (1.87)	–	12.0 (1.11)	19 7/8" (505)	27.6 (2.57)
CN36	–	5.0 (0.47)	–	10 13/16" (275)	67" (1702)	22.5 (2.09)	–	13.4 (1.24)	12 13/16" (325)	30.6 (2.84)
C12	2.5 (0.23)	1.9 (0.18)	18 5/16" (465)	14 7/16" (367)	19 1/4" (489)	2.6 (0.24)	2.5 (0.23)	2.4 (0.22)	60 9/16" (1538)	4.0 (0.37)
C125	3.0 (0.28)	2.4 (0.22)	18 5/16" (465)	14 7/16" (367)	23 7/16" (595)	3.2 (0.30)	3.0 (0.28)	2.9 (0.27)	56 3/8" (1432)	4.7 (0.44)
C13	4.0 (0.37)	3.1 (0.29)	18 5/16" (465)	14 7/16" (367)	31 1/16" (789)	4.3 (0.40)	4.0 (0.37)	3.9 (0.36)	48 3/4" (1238)	6.0 (0.56)
C135	4.6 (0.43)	3.6 (0.33)	18 5/16" (465)	14 7/16" (367)	35 15/16" (913)	4.9 (0.46)	4.6 (0.43)	4.5 (0.42)	43 7/8" (1114)	6.8 (0.63)
C14	5.5 (0.51)	4.3 (0.40)	18 5/16" (465)	14 7/16" (367)	43 1/8" (1095)	5.9 (0.55)	5.5 (0.51)	5.4 (0.50)	36 11/16" (932)	8.0 (0.74)
C145	6.1 (0.57)	4.8 (0.45)	18 5/16" (465)	14 7/16" (367)	47 15/16" (1218)	6.6 (0.61)	6.1 (0.57)	6.0 (0.56)	31 7/8" (810)	8.8 (0.82)
C15	7.0 (0.65)	5.5 (0.51)	18 5/16" (465)	14 7/16" (367)	55" (1397)	7.5 (0.70)	7.0 (0.65)	6.9 (0.64)	24 13/16" (630)	10.0 (0.93)
C155	7.6 (0.71)	6.0 (0.56)	18 5/16" (465)	14 7/16" (367)	59 15/16" (1522)	8.2 (0.76)	7.6 (0.71)	7.5 (0.70)	19 7/8" (505)	10.9 (1.01)
C16	8.5 (0.79)	6.7 (0.62)	18 5/16" (465)	14 7/16" (367)	67" (1702)	9.2 (0.86)	8.5 (0.79)	8.4 (0.78)	12 13/16" (325)	12.0 (1.12)
C22	2.5 (0.23)	1.9 (0.18)	18 5/16" (465)	14 7/16" (367)	19 1/4" (489)	5.2 (0.48)	5.0 (0.46)	4.8 (0.45)	60 9/16" (1538)	8.0 (0.74)
C225	3.0 (0.28)	2.4 (0.22)	18 5/16" (465)	14 7/16" (367)	23 7/16" (595)	6.4 (0.59)	6.0 (0.56)	5.8 (0.54)	56 3/8" (1432)	9.4 (0.87)
C23	4.0 (0.37)	3.1 (0.29)	18 5/16" (465)	14 7/16" (367)	31 1/16" (789)	8.5 (0.79)	7.9 (0.73)	7.8 (0.73)	48 3/4" (1238)	12.0 (1.12)
C235	4.6 (0.43)	3.6 (0.33)	18 5/16" (465)	14 7/16" (367)	35 15/16" (913)	9.9 (0.92)	9.2 (0.86)	9.0 (0.84)	43 7/8" (1114)	13.6 (1.26)
C24	5.5 (0.51)	4.3 (0.40)	18 5/16" (465)	14 7/16" (367)	43 1/8" (1095)	11.8 (1.10)	11.0 (1.02)	10.8 (1.00)	36 11/16" (932)	16.0 (1.49)
C245	6.1 (0.57)	4.8 (0.45)	18 5/16" (465)	14 7/16" (367)	47 15/16" (1218)	13.1 (1.22)	12.2 (1.13)	12.0 (1.12)	31 7/8" (810)	17.6 (1.64)
C25	7.0 (0.65)	5.5 (0.51)	18 5/16" (465)	14 7/16" (367)	55" (1397)	15.1 (1.40)	14.0 (1.30)	13.8 (1.28)	24 13/16" (630)	20.0 (1.86)
C255	7.6 (0.71)	6.0 (0.56)	18 5/16" (465)	14 7/16" (367)	59 15/16" (1522)	16.4 (1.52)	15.3 (1.42)	15.0 (1.39)	19 7/8" (505)	21.6 (2.01)

• Top of Subfloor to Top of Inside Sill Stop is calculated based upon a structural header height of 6'-10 1/2" (2096).
• Dimensions in parentheses are in millimeters or square meters.

continued on next page

Opening and Area Specifications for Casement Windows *(continued)*

Window Number	Clear Opening Area: Hinge for Widest Clear Opening Sq. Ft./(m²)	Clear Opening Area: Hinge with Wash Mode Sq. Ft./(m²)	Clear Opening in Full Open Position: Hinge for Widest Clear Opening Inches/(mm)	Clear Opening in Full Open Position: Hinge with Wash Mode Inches/(mm)	Clear Opening in Full Open Position: Height Inches/(mm)	Glass Area Sq. Ft./(m²)	Vent Area: Hinge for Widest Clear Opening Sq. Ft./(m²)	Vent Area: Hinge with Wash Mode Sq. Ft./(m²)	Top of Subfloor to Top of Inside Sill Stop Inches/(mm)	Overall Window Area Sq. Ft./(m²)
C26	8.5 (0.79)	6.7 (0.62)	18 5/16" (465)	14 7/16" (367)	67" (1702)	18.4 (1.71)	17.1 (1.59)	16.8 (1.56)	12 13/16" (325)	24.0 (2.23)
C32	2.5 (0.23)	1.9 (0.18)	18 5/16" (465)	14 7/16" (367)	19 1/4" (489)	7.8 (0.73)	5.0 (0.46)	4.8 (0.45)	60 9/16" (1538)	12.0 (1.12)
C325	3.0 (0.28)	2.4 (0.22)	18 5/16" (465)	14 7/16" (367)	23 7/16" (595)	9.6 (0.89)	6.0 (0.56)	5.8 (0.54)	56 3/8" (1432)	14.1 (1.31)
C33	4.0 (0.37)	3.1 (0.29)	18 5/16" (465)	14 7/16" (367)	31 1/16" (789)	12.8 (1.19)	7.9 (0.73)	7.8 (0.73)	48 3/4" (1238)	17.9 (1.66)
C335	4.6 (0.43)	3.6 (0.33)	18 5/16" (465)	14 7/16" (367)	35 15/16" (913)	14.8 (1.38)	9.2 (0.86)	9.0 (0.84)	43 7/8" (1114)	20.4 (1.90)
C34	5.5 (0.51)	4.3 (0.40)	18 5/16" (465)	14 7/16" (367)	43 1/8" (1095)	17.7 (1.64)	11.0 (1.02)	10.8 (1.00)	36 11/16" (932)	24.0 (2.23)
C345	6.1 (0.57)	4.8 (0.45)	18 5/16" (465)	14 7/16" (367)	47 15/16" (1218)	19.7 (1.83)	12.2 (1.13)	12.0 (1.12)	31 7/8" (810)	26.4 (2.45)
C35	7.0 (0.65)	5.5 (0.51)	18 5/16" (465)	14 7/16" (367)	55" (1397)	22.6 (2.10)	14.0 (1.30)	13.8 (1.28)	24 13/16" (630)	29.9 (2.78)
CW12*	3.0 (0.28)	2.5 (0.23)	22 9/16" (573)	18 11/16" (475)	19 1/4" (489)	3.2 (0.30)	3.0 (0.28)	3.0 (0.28)	60 9/16" (1538)	4.8 (0.45)
CW125*	3.7 (0.34)	3.0 (0.28)	22 9/16" (573)	18 11/16" (475)	23 7/16" (595)	3.9 (0.36)	3.7 (0.34)	3.6 (0.33)	56 3/8" (1432)	5.6 (0.52)
CW13*	4.9 (0.46)	4.0 (0.37)	22 9/16" (573)	18 11/16" (475)	31 1/16" (789)	5.2 (0.48)	4.9 (0.46)	4.8 (0.45)	48 3/4" (1238)	7.1 (0.66)
CW135 ◊*	5.7 (0.53)	5.1 (0.47)	22 9/16" (573)	20" (508)	36 3/8" (924)	6.0 (0.56)	5.7 (0.53)	5.5 (0.51)	43 7/8" (1114)	8.0 (0.74)
CW14 ◊*	6.8 (0.63)	6.0 (0.56)	22 9/16" (573)	20" (508)	43 1/8" (1095)	7.2 (0.67)	6.8 (0.63)	6.6 (0.61)	36 11/16" (932)	9.5 (0.88)
CW145 ◊*	7.5 (0.70)	6.7 (0.62)	22 9/16" (573)	20" (508)	47 15/16" (1218)	8.0 (0.74)	7.5 (0.70)	7.3 (0.68)	31 7/8" (810)	10.4 (0.97)
CW15 ◊*	8.6 (0.80)	7.6 (0.71)	22 9/16" (573)	20" (508)	55" (1397)	9.2 (0.86)	8.6 (0.80)	8.4 (0.78)	24 13/16" (630)	11.8 (1.10)
CW155 ◊*	9.4 (0.87)	8.3 (0.77)	22 9/16" (573)	20" (508)	59 15/16" (1522)	10.0 (0.93)	9.4 (0.87)	9.1 (0.85)	19 7/8" (505)	12.8 (1.19)
CW16 ◊*	10.5 (0.98)	9.3 (0.86)	22 9/16" (573)	20" (508)	67" (1702)	11.2 (1.04)	10.5 (0.98)	10.2 (0.95)	12 13/16" (325)	14.2 (1.32)
CW22*	3.0 (0.28)	2.5 (0.23)	22 9/16" (573)	18 11/16" (475)	19 1/4" (489)	6.4 (0.59)	6.0 (0.56)	6.0 (0.56)	60 9/16" (1538)	9.6 (0.89)
CW225*	3.7 (0.34)	3.0 (0.28)	22 9/16" (573)	18 11/16" (475)	23 7/16" (595)	7.8 (0.72)	7.4 (0.69)	7.2 (0.67)	56 3/8" (1432)	11.2 (1.04)
CW23*	4.9 (0.46)	4.0 (0.37)	22 9/16" (573)	18 11/16" (475)	31 1/16" (789)	10.4 (0.97)	9.8 (0.91)	9.6 (0.89)	48 3/4" (1238)	14.1 (1.31)
CW235 ◊*	5.7 (0.53)	5.1 (0.47)	22 9/16" (573)	20" (508)	36 3/8" (924)	12.0 (1.12)	11.4 (1.06)	11.1 (1.03)	43 7/8" (1114)	16.0 (1.49)
CW24 ◊*	6.8 (0.63)	6.0 (0.56)	22 9/16" (573)	20" (508)	43 1/8" (1095)	14.4 (1.34)	13.5 (1.25)	13.1 (1.22)	36 11/16" (932)	18.8 (1.75)
CW245 ◊*	7.5 (0.70)	6.7 (0.62)	22 9/16" (573)	20" (508)	47 15/16" (1218)	16.0 (1.49)	15.0 (1.39)	14.6 (1.36)	31 7/8" (810)	20.8 (1.93)
CW25 ◊*	8.6 (0.80)	7.6 (0.71)	22 9/16" (573)	20" (508)	55" (1397)	18.3 (1.70)	17.3 (1.61)	16.7 (1.55)	24 13/16" (630)	23.5 (2.18)
CW255 ◊*	9.4 (0.87)	8.3 (0.77)	22 9/16" (573)	20" (508)	59 15/16" (1522)	20.0 (1.86)	18.8 (1.75)	18.2 (1.69)	19 7/8" (505)	25.6 (2.38)
CW26 ◊*	10.5 (0.98)	9.3 (0.86)	22 9/16" (573)	20" (508)	67" (1702)	22.3 (2.07)	21.0 (1.95)	20.4 (1.90)	12 13/16" (325)	28.2 (2.62)
CW32*	3.0 (0.28)	2.5 (0.23)	22 9/16" (573)	18 11/16" (475)	19 1/4" (489)	9.6 (0.89)	6.0 (0.56)	6.0 (0.56)	60 9/16" (1538)	14.4 (1.34)
CW325*	3.7 (0.34)	3.0 (0.28)	22 9/16" (573)	18 11/16" (475)	23 7/16" (595)	11.7 (1.09)	7.4 (0.69)	7.2 (0.67)	56 3/8" (1432)	16.8 (1.56)
CW33*	4.9 (0.46)	4.0 (0.37)	22 9/16" (567)	18 11/16" (475)	31 1/16" (789)	15.6 (1.45)	9.8 (0.91)	9.6 (0.89)	48 3/4" (1238)	21.1 (1.96)
CW335 ◊*	5.7 (0.53)	5.1 (0.47)	22 9/16" (567)	20" (508)	36 3/8" (924)	18.0 (1.67)	11.4 (1.06)	11.1 (1.03)	43 7/8" (1114)	24.0 (2.23)
CW34 ◊*	6.8 (0.63)	6.0 (0.56)	22 9/16" (567)	20" (508)	43 1/8" (1095)	21.6 (2.01)	13.6 (1.26)	13.1 (1.22)	36 11/16" (932)	28.2 (2.62)
CW345 ◊*	7.5 (0.70)	6.7 (0.62)	22 9/16" (567)	20" (508)	47 15/16" (1218)	24.0 (2.23)	15.0 (1.39)	14.6 (1.36)	31 7/8" (810)	31.0 (2.88)
CW35 ◊*	8.6 (0.80)	7.6 (0.71)	22 9/16" (567)	20" (508)	55" (1397)	27.6 (2.56)	17.2 (1.60)	16.7 (1.55)	24 13/16" (630)	35.2 (3.27)
CX125	4.2 (0.39)	3.5 (0.33)	25 11/16" (653)	21 13/16" (554)	23 7/16" (595)	4.4 (0.41)	4.2 (0.39)	4.1 (0.38)	56 3/8" (1432)	6.2 (0.58)
CX13	5.5 (0.52)	4.7 (0.44)	25 11/16" (653)	21 13/16" (554)	31 1/16" (789)	5.9 (0.54)	5.5 (0.52)	5.4 (0.51)	48 3/4" (1238)	7.9 (0.73)
CX135 ◊	6.4 (0.60)	5.4 (0.51)	25 11/16" (653)	21 13/16" (554)	35 15/16" (913)	6.8 (0.63)	6.4 (0.60)	6.3 (0.59)	43 7/8" (1114)	8.9 (0.83)
CX14 ◊	7.7 (0.72)	6.5 (0.61)	25 11/16" (653)	21 13/16" (554)	43 1/8" (1095)	8.1 (0.76)	7.7 (0.72)	7.6 (0.70)	36 11/16" (932)	10.5 (0.98)
CX145 ◊	8.6 (0.80)	7.3 (0.67)	25 11/16" (653)	21 13/16" (554)	47 15/16" (1218)	9.0 (0.84)	8.6 (0.80)	8.4 (0.78)	31 7/8" (810)	11.6 (1.07)
CX15 ◊	9.8 (0.91)	8.3 (0.77)	25 11/16" (653)	21 13/16" (554)	55" (1397)	10.4 (0.96)	9.8 (0.91)	9.7 (0.90)	24 13/16" (630)	13.1 (1.22)
CX155 ◊	10.7 (0.99)	9.1 (0.84)	25 11/16" (653)	21 13/16" (554)	59 15/16" (1522)	11.3 (1.05)	10.7 (0.99)	10.5 (0.98)	19 7/8" (505)	14.2 (1.32)
CX16 ◊	12.0 (1.11)	10.1 (0.94)	25 11/16" (653)	21 13/16" (554)	67" (1702)	12.6 (1.17)	12.0 (1.11)	11.8 (1.09)	12 13/16" (325)	15.7 (1.46)
CX23	5.5 (0.52)	4.7 (0.44)	25 11/16" (653)	21 13/16" (554)	31 1/16" (789)	11.7 (1.09)	11.1 (1.03)	10.9 (1.01)	48 3/4" (1238)	15.7 (1.46)
CX235 ◊	6.4 (0.60)	5.4 (0.51)	25 11/16" (653)	21 13/16" (554)	35 15/16" (913)	13.6 (1.26)	12.8 (1.19)	12.6 (1.17)	43 7/8" (1114)	17.8 (1.65)
CX24 ◊	7.7 (0.72)	6.5 (0.61)	25 11/16" (653)	21 13/16" (554)	43 1/8" (1095)	16.3 (1.51)	15.4 (1.43)	15.1 (1.41)	36 11/16" (932)	20.9 (1.94)
CX245 ◊	8.6 (0.80)	7.3 (0.67)	25 11/16" (653)	21 13/16" (554)	47 15/16" (1218)	18.1 (1.68)	17.1 (1.59)	16.8 (1.56)	31 7/8" (810)	23.0 (2.14)
CX25 ◊	9.8 (0.91)	8.3 (0.77)	25 11/16" (653)	21 13/16" (554)	55" (1397)	20.7 (1.93)	19.6 (1.82)	19.3 (1.79)	24 13/16" (630)	26.1 (2.42)
CXW13 ◊	6.5 (0.60)	5.6 (0.53)	30 1/8" (765)	26 1/4" (667)	31 1/16" (789)	6.8 (0.63)	6.5 (0.60)	6.1 (0.57)	48 3/4" (1238)	9.0 (0.84)
CXW135 ◊	7.5 (0.70)	6.6 (0.61)	30 1/8" (765)	26 1/4" (667)	35 15/16" (913)	7.9 (0.73)	7.5 (0.70)	7.0 (0.65)	43 7/8" (1114)	10.2 (0.95)
CXW14 ◊	9.0 (0.84)	7.9 (0.73)	30 1/8" (765)	26 1/4" (667)	43 1/8" (1095)	9.5 (0.88)	9.0 (0.84)	8.4 (0.78)	36 11/16" (932)	12.0 (1.12)
CXW145 ◊	10.0 (0.93)	8.8 (0.82)	30 1/8" (765)	26 1/4" (667)	47 15/16" (1218)	10.5 (0.98)	10.0 (0.93)	9.4 (0.87)	31 7/8" (810)	13.2 (1.23)
CXW15 ◊**	11.5 (1.07)	–	30 1/8" (765)	–	55" (1397)	12.1 (1.12)	11.5 (1.07)	–	24 13/16" (630)	14.9 (1.38)
CXW155 ◊**	12.6 (1.17)	–	30 1/8" (765)	–	59 15/16" (1522)	13.1 (1.22)	12.6 (1.17)	–	19 7/8" (505)	16.2 (1.51)
CXW16 ◊**	14.0 (1.30)	–	30 1/8" (765)	–	67" (1702)	14.7 (1.37)	14.0 (1.30)	–	12 13/16" (325)	17.9 (1.66)
CXW23	6.5 (0.60)	5.6 (0.53)	30 1/8" (765)	26 1/4" (667)	31 1/16" (789)	13.6 (1.26)	13.0 (1.21)	12.2 (0.57)	48 3/4" (1238)	17.9 (1.66)
CXW235 ◊	7.5 (0.70)	6.5 (0.61)	30 1/8" (765)	26 1/4" (667)	35 5/16" (913)	15.8 (1.47)	15.0 (1.39)	14.0 (0.57)	43 7/8" (1114)	20.3 (1.89)
CXW24 ◊	9.0 (0.84)	7.9 (0.73)	30 1/8" (765)	26 1/4" (667)	43 1/8" (1059)	19.0 (1.77)	18.0 (1.67)	16.8 (0.57)	36 11/16" (932)	23.9 (2.22)
CXW245 ◊	10.0 (0.93)	8.7 (0.81)	30 1/8" (765)	26 1/4" (667)	47 15/16" (1218)	21.0 (1.95)	20.0 (1.86)	18.8 (0.57)	31 7/8" (810)	26.3 (2.44)
CXW25 ◊**	11.5 (1.07)	–	30 1/8" (765)	–	55" (1397)	24.2 (2.25)	23.0 (2.14)	–	24 13/16" (630)	29.8 (2.77)

• Top of Subfloor to Top of Inside Sill Stop is calculated based upon a structural header height of 6'-10 1/2" (2096).
• Dimensions in parentheses are in millimeters or square meters.
◊ Meets or exceeds clear opening area of 5.7 sq. ft. or 0.53 m², clear opening width of 20" (508) and clear opening height of 24" (610) with appropriate hinge specified.
* Meets clear opening width of 20" (508) using hinge with wash mode and control bracket (bracket can be pivoted for cleaning position) and meets clear opening width of 22" (559) using hinge for widest clear opening.
** Available with straight-arm operators (hinged for widest clear opening) only.

Opening and Area Specifications for Awning Windows

Window Number	Clear Opening Area Sq. Ft./(m²)	Clear Opening in Full Open Position Width Inches/(mm)	Clear Opening in Full Open Position Depth Inches/(mm)	Glass Area Sq. Ft./(m²)	Vent Area Sq. Ft./(m²)	Top of Subfloor to Top of Inside Sill Stop Inches/(mm)	Overall Window Area Sq. Ft./(m²)
AR21	0.9 (0.08)	19 1/2" (495)	6 3/8" (162)	1.7 (0.16)	0.9 (0.08)	67 7/16" (1713)	2.8 (0.26)
AR251	1.1 (0.10)	23 3/4" (603)	6 3/8" (162)	2.0 (0.19)	1.1 (0.10)	67 7/16" (1713)	3.3 (0.31)
AR281	1.2 (0.11)	26 7/8" (683)	6 3/8" (162)	2.3 (0.21)	1.2 (0.11)	67 7/16" (1713)	3.7 (0.34)
AR31	1.4 (0.13)	31 5/16" (795)	6 3/8" (162)	2.7 (0.25)	1.4 (0.13)	67 7/16" (1713)	4.2 (0.39)
AR351	1.6 (0.15)	36 3/16" (919)	6 3/8" (162)	3.1 (0.29)	1.6 (0.15)	67 7/16" (1713)	4.8 (0.45)
AR41	1.9 (0.18)	43 3/8" (1102)	6 3/8" (162)	3.8 (0.35)	1.9 (0.18)	67 7/16" (1713)	5.7 (0.53)
AR451	2.1 (0.20)	48 3/16" (1224)	6 3/8" (162)	4.2 (0.39)	2.1 (0.20)	67 7/16" (1713)	6.2 (0.58)
AR51	2.5 (0.23)	55 1/2" (1410)	6 3/8" (162)	4.8 (0.45)	2.5 (0.23)	67 7/16" (1713)	7.1 (0.66)
AR551	2.7 (0.25)	60 3/16" (1529)	6 3/8" (162)	5.2 (0.48)	2.7 (0.25)	67 7/16" (1713)	7.7 (0.72)
AR61	3.0 (0.28)	67 1/2" (1715)	6 3/8" (162)	5.9 (0.55)	3.0 (0.28)	67 7/16" (1713)	8.5 (0.79)
AR221	0.9 (0.08)	19 1/2" (495)	6 3/8" (162)	3.4 (0.32)	1.7 (0.16)	67 7/16" (1713)	5.6 (0.52)
AR2251	1.1 (0.10)	23 3/4" (603)	6 3/8" (162)	4.0 (0.37)	2.1 (0.20)	67 7/16" (1713)	6.6 (0.61)
AR2281	1.2 (0.11)	26 7/8" (683)	6 3/8" (162)	4.6 (0.43)	2.4 (0.22)	67 7/16" (1713)	7.4 (0.69)
AR231	1.4 (0.13)	31 5/16" (795)	6 3/8" (162)	5.4 (0.50)	2.8 (0.26)	67 7/16" (1713)	8.4 (0.78)
AR321	0.9 (0.08)	19 1/2" (495)	6 3/8" (162)	5.1 (0.47)	2.6 (0.24)	67 7/16" (1713)	8.4 (0.78)
AR3251	1.1 (0.10)	23 3/4" (603)	6 3/8" (162)	6.0 (0.56)	3.2 (0.29)	67 7/16" (1713)	9.9 (0.92)
AN21	0.9 (0.08)	19 1/2" (495)	6 7/16" (164)	2.2 (0.20)	0.9 (0.08)	63 15/16" (1624)	3.4 (0.32)
AN251	1.1 (0.10)	23 3/4" (603)	6 7/16" (164)	2.6 (0.24)	1.1 (0.10)	63 15/16" (1624)	4.0 (0.37)
AN281	1.2 (0.11)	26 7/8" (683)	6 7/16" (164)	3.0 (0.28)	1.2 (0.11)	63 15/16" (1624)	4.5 (0.42)
AN31	1.4 (0.13)	31 5/16" (795)	6 7/16" (164)	3.5 (0.33)	1.4 (0.13)	63 15/16" (1624)	5.1 (0.47)
AN351	1.6 (0.15)	36 3/16" (919)	6 7/16" (164)	4.0 (0.37)	1.6 (0.15)	63 15/16" (1624)	5.8 (0.54)
AN41	1.9 (0.18)	43 3/8" (1102)	6 7/16" (164)	4.8 (0.45)	1.9 (0.18)	63 15/16" (1624)	6.8 (0.63)
AN451	2.2 (0.20)	48 3/16" (1224)	6 7/16" (164)	5.4 (0.50)	2.2 (0.20)	63 15/16" (1624)	7.5 (0.70)
AN51	2.5 (0.23)	55 1/2" (1410)	6 7/16" (164)	6.2 (0.58)	2.5 (0.23)	63 15/16" (1624)	8.5 (0.79)
AN551	2.7 (0.25)	60 3/16" (1529)	6 7/16" (164)	6.7 (0.62)	2.7 (0.25)	63 15/16" (1624)	9.2 (0.86)
AN61	3.0 (0.28)	67 1/2" (1715)	6 7/16" (164)	7.5 (0.70)	3.0 (0.28)	63 15/16" (1624)	10.2 (0.95)
AN221	0.9 (0.08)	19 1/2" (495)	6 7/16" (164)	4.4 (0.41)	1.7 (0.16)	63 15/16" (1624)	6.8 (0.63)
AN2251	1.1 (0.10)	23 3/4" (603)	6 7/16" (164)	5.2 (0.48)	2.1 (0.20)	63 15/16" (1624)	8.0 (0.74)
AN2281	1.2 (0.11)	26 7/8" (683)	6 7/16" (164)	6.0 (0.56)	2.4 (0.22)	63 15/16" (1624)	9.0 (0.84)
AN231	1.4 (0.13)	31 5/16" (795)	6 7/16" (164)	7.0 (0.65)	2.8 (0.26)	63 15/16" (1624)	10.2 (0.95)
AN321	0.9 (0.08)	19 1/2" (495)	6 7/16" (164)	6.6 (0.61)	2.6 (0.24)	63 15/16" (1624)	10.2 (0.95)
AN3251	1.1 (0.10)	23 3/4" (603)	6 7/16" (164)	7.8 (0.73)	3.2 (0.30)	63 15/16" (1624)	12.0 (1.12)
A21	0.9 (0.08)	19 1/2" (495)	6 1/2" (165)	2.6 (0.24)	0.9 (0.08)	60 5/16" (1532)	4.0 (0.37)
A251	1.1 (0.10)	23 3/4" (603)	6 1/2" (165)	3.2 (0.30)	1.1 (0.10)	60 5/16" (1532)	4.8 (0.45)
A281	1.2 (0.11)	26 7/8" (683)	6 1/2" (165)	3.7 (0.34)	1.2 (0.11)	60 5/16" (1532)	5.3 (0.49)
A31	1.4 (0.13)	31 5/16" (795)	6 1/2" (165)	4.3 (0.40)	1.4 (0.13)	60 5/16" (1532)	6.0 (0.56)
A351	1.6 (0.15)	36 3/16" (919)	6 1/2" (165)	4.9 (0.46)	1.6 (0.15)	60 5/16" (1532)	6.8 (0.63)
A41	2.0 (0.18)	43 3/8" (1102)	6 1/2" (165)	5.9 (0.55)	2.0 (0.18)	60 5/16" (1532)	8.0 (0.74)
A451	2.2 (0.20)	48 3/16" (1224)	6 1/2" (165)	6.6 (0.61)	2.2 (0.20)	60 5/16" (1532)	8.8 (0.82)
A51	2.5 (0.23)	55 1/2" (1410)	6 1/2" (165)	7.5 (0.70)	2.5 (0.23)	60 5/16" (1532)	10.0 (0.93)
A551	2.7 (0.25)	60 3/16" (1529)	6 1/2" (165)	8.2 (0.76)	2.7 (0.25)	60 5/16" (1532)	10.9 (1.01)
A61	3.0 (0.28)	67 1/2" (1715)	6 1/2" (165)	9.2 (0.86)	3.0 (0.28)	60 5/16" (1532)	12.0 (1.12)
A221	0.9 (0.08)	19 1/2" (495)	6 1/2" (165)	5.2 (0.48)	1.8 (0.16)	60 5/16" (1532)	8.0 (0.74)
A2251	1.1 (0.10)	23 3/4" (603)	6 1/2" (165)	6.4 (0.60)	2.1 (0.20)	60 5/16" (1532)	9.6 (0.89)
A2281	1.2 (0.11)	26 7/8" (683)	6 1/2" (165)	7.4 (0.69)	2.4 (0.23)	60 5/16" (1532)	10.6 (0.99)
A231	1.4 (0.13)	31 5/16" (795)	6 1/2" (165)	8.6 (0.80)	2.8 (0.26)	60 5/16" (1532)	12.0 (1.12)
A321	0.9 (0.08)	19 1/2" (495)	6 1/2" (165)	7.8 (0.73)	2.6 (0.25)	60 5/16" (1532)	12.0 (1.12)
A3251	1.1 (0.10)	23 3/4" (603)	6 1/2" (165)	9.6 (0.89)	3.2 (0.30)	60 5/16" (1532)	14.4 (1.34)
AW21	0.9 (0.08)	19 1/2" (495)	6 1/2" (165)	3.2 (0.30)	0.9 (0.08)	56 1/16" (1424)	4.8 (0.45)
AW251	1.1 (0.10)	23 3/4" (603)	6 1/2" (165)	3.9 (0.36)	1.1 (0.10)	56 1/16" (1424)	5.6 (0.52)
AW281	1.2 (0.11)	26 7/8" (683)	6 1/2" (165)	4.4 (0.41)	1.2 (0.11)	56 1/16" (1424)	6.2 (0.58)
AW31	1.4 (0.13)	31 5/16" (795)	6 1/2" (165)	5.2 (0.48)	1.4 (0.13)	56 1/16" (1424)	7.1 (0.66)
AW351	1.6 (0.15)	36 3/16" (919)	6 1/2" (165)	6.0 (0.56)	1.6 (0.15)	56 1/16" (1424)	8.0 (0.74)
AW41	2.0 (0.18)	43 3/8" (1102)	6 1/2" (165)	7.2 (0.67)	2.0 (0.18)	56 1/16" (1424)	9.5 (0.88)
AW451	2.2 (0.20)	48 3/16" (1224)	6 1/2" (165)	8.0 (0.74)	2.2 (0.20)	56 1/16" (1424)	10.4 (0.97)
AW51	2.5 (0.23)	55 1/2" (1410)	6 1/2" (165)	9.2 (0.86)	2.5 (0.23)	56 1/16" (1424)	11.8 (1.10)
AW551	2.7 (0.25)	60 3/16" (1529)	6 1/2" (165)	10.0 (0.93)	2.7 (0.25)	56 1/16" (1424)	12.8 (1.19)
AW61	3.0 (0.28)	67 1/2" (1715)	6 1/2" (165)	11.2 (1.04)	3.0 (0.28)	56 1/16" (1424)	14.2 (1.32)
AW221	0.9 (0.08)	19 1/2" (495)	6 1/2" (165)	6.4 (0.60)	1.8 (0.16)	56 1/16" (1424)	9.6 (0.89)
AW2251	1.1 (0.10)	23 3/4" (603)	6 1/2" (165)	7.8 (0.73)	2.1 (0.20)	56 1/16" (1424)	11.2 (1.04)

• Top of Subfloor to Top of Inside Sill Stop is calculated based upon a structural header height of 6'-10 1/2" (2096).
• Dimensions in parentheses are in millimeters or square meters.

continued on next page

Area Specifications for Casement/ Awning Picture Windows

Window Number	Glass Area Sq. Ft./(m²)	Overall Window Area Sq. Ft./(m²)
P3030	6.8 (0.63)	9.0 (0.84)
P3035	7.8 (0.73)	10.2 (0.95)
P3040	9.4 (0.87)	12.0 (1.12)
P3045	10.4 (0.97)	13.2 (1.23)
P3050	12.0 (1.12)	14.9 (1.38)
P3055	13.0 (1.21)	16.2 (1.51)
P3060	14.6 (1.36)	17.9 (1.66)
P3530	7.8 (0.73)	10.2 (0.95)
P3535	9.0 (0.84)	11.6 (1.08)
P3540	10.8 (1.00)	13.6 (1.26)
P3545	12.1 (1.12)	15.0 (1.39)
P3550	13.8 (1.28)	17.0 (1.58)
P3555	15.1 (1.40)	18.4 (1.71)
P3560	16.8 (1.56)	20.4 (1.90)
P4030	9.4 (0.87)	12.0 (1.12)
P4035	10.8 (1.00)	13.6 (1.26)
P4040	13.0 (1.21)	16.0 (1.49)
P4045	14.5 (1.35)	17.6 (1.64)
P4050	16.6 (1.54)	20.0 (1.86)
P4055	18.1 (1.68)	21.6 (2.01)
P4060	20.2 (1.88)	24.0 (2.23)
P4530	10.4 (0.97)	13.2 (1.23)
P4535	12.1 (1.12)	15.0 (1.39)
P4540	14.5 (1.35)	17.6 (1.64)
P4545	16.1 (1.50)	19.4 (1.80)
P4550	18.4 (1.71)	22.0 (2.04)
P4555	20.1 (1.87)	23.8 (2.21)
P4560	22.4 (2.08)	26.4 (2.45)
P5030	12.0 (1.12)	14.9 (1.38)
P5035	13.8 (1.28)	17.0 (1.58)
P5040	16.6 (1.54)	20.0 (1.86)
P5045	18.4 (1.71)	22.0 (2.04)
P5050	21.1 (1.96)	24.9 (2.31)
P5055	23.0 (2.14)	26.9 (2.50)
P5060	25.7 (2.39)	29.9 (2.78)
P5530	13.0 (1.21)	16.2 (1.51)
P5535	15.1 (1.40)	18.4 (1.71)
P5540	18.1 (1.68)	21.6 (2.01)
P5545	20.1 (1.87)	23.8 (2.21)
P5550	23.0 (2.14)	26.9 (2.50)
P6030	14.6 (1.36)	17.9 (1.66)
P6035	16.8 (1.56)	20.4 (1.90)
P6040	20.2 (1.88)	24.0 (2.23)
P6045	22.4 (2.08)	26.4 (2.45)
P6050	25.7 (2.39)	29.9 (2.78)

• Dimensions in parentheses are in square meters.

Opening and Area Specifications for Awning Windows *(continued)*

Window Number	Clear Opening Area Sq. Ft./(m²)	Clear Opening in Full Open Position Width Inches/(mm)	Clear Opening in Full Open Position Depth Inches/(mm)	Glass Area Sq. Ft./(m²)	Vent Area Sq. Ft./(m²)	Top of Subfloor to Top of Inside Sill Stop Inches/(mm)	Overall Window Area Sq. Ft./(m²)
AW2281	1.2 (0.11)	26 7/8" (683)	6 1/2" (165)	8.8 (0.82)	2.4 (0.23)	56 1/16" (1424)	12.4 (1.15)
AW231	1.4 (0.13)	31 5/16" (795)	6 1/2" (165)	10.4 (0.97)	2.8 (0.26)	56 1/16" (1424)	14.2 (1.32)
AW321	0.9 (0.08)	19 1/2" (495)	6 1/2" (165)	9.6 (0.89)	2.6 (0.25)	56 1/16" (1424)	14.4 (1.34)
AW3251	1.1 (0.10)	23 3/4" (603)	6 1/2" (165)	11.7 (1.09)	3.2 (0.30)	56 1/16" (1424)	16.8 (1.56)
AX251	1.1 (0.10)	23 3/4" (603)	6 1/2" (165)	4.4 (0.41)	1.1 (0.10)	53 15/16" (1370)	6.2 (0.58)
AX281	1.2 (0.11)	26 7/8" (683)	6 1/2" (165)	5.0 (0.47)	1.2 (0.11)	53 15/16" (1370)	6.9 (0.64)
AX31	1.4 (0.13)	31 5/16" (795)	6 1/2" (165)	5.9 (0.54)	1.4 (0.13)	53 15/16" (1370)	7.9 (0.73)
AX351	1.6 (0.15)	36 3/16" (919)	6 1/2" (165)	6.8 (0.63)	1.6 (0.15)	53 15/16" (1370)	8.9 (0.83)
AX41	2.0 (0.18)	43 3/8" (1102)	6 1/2" (165)	8.1 (0.76)	2.0 (0.18)	53 15/16" (1370)	10.5 (0.98)
AX451	2.2 (0.20)	48 3/16" (1224)	6 1/2" (165)	9.0 (0.84)	2.2 (0.20)	53 15/16" (1370)	11.6 (1.07)
AX51	2.5 (0.23)	55 1/2" (1410)	6 1/2" (165)	10.4 (0.96)	2.5 (0.23)	53 15/16" (1370)	13.1 (1.22)
AX551	2.7 (0.25)	60 3/16" (1529)	6 1/2" (165)	11.3 (1.05)	2.7 (0.25)	53 15/16" (1370)	14.2 (1.32)
AX61	3.0 (0.28)	67 1/2" (1715)	6 1/2" (165)	12.6 (1.17)	3.0 (0.28)	53 15/16" (1370)	15.7 (1.46)
AX2251	1.1 (0.10)	23 3/4" (603)	6 1/2" (165)	8.9 (0.82)	2.1 (0.20)	53 15/16" (1370)	12.4 (1.15)
AX2281	1.2 (0.11)	26 7/8" (683)	6 1/2" (165)	10.0 (0.93)	2.4 (0.23)	53 15/16" (1370)	13.8 (1.28)
AX231	1.4 (0.13)	31 5/16" (795)	6 1/2" (165)	11.7 (1.09)	2.8 (0.26)	53 15/16" (1370)	15.7 (1.46)
AX3251	1.1 (0.10)	23 3/4" (603)	6 1/2" (165)	13.3 (1.24)	3.2 (0.30)	53 15/16" (1370)	18.6 (1.73)
AXW281	1.2 (0.11)	26 7/8" (683)	6 1/2" (165)	5.8 (0.54)	1.2 (0.11)	48 1/2" (1232)	7.9 (0.73)
AXW31	1.4 (0.13)	31 5/16" (795)	6 1/2" (165)	6.8 (0.63)	1.4 (0.13)	48 1/2" (1232)	9.0 (0.84)
AXW351	1.6 (0.15)	36 3/16" (919)	6 1/2" (165)	7.9 (0.73)	1.6 (0.15)	48 1/2" (1232)	10.2 (0.95)
AXW41	2.0 (0.18)	43 3/8" (1102)	6 1/2" (165)	9.5 (0.88)	2.0 (0.18)	48 1/2" (1232)	12.0 (1.12)
AXW451	2.2 (0.20)	48 3/16" (1224)	6 1/2" (165)	10.5 (0.98)	2.2 (0.20)	48 1/2" (1232)	13.2 (1.23)
AXW51	2.5 (0.23)	55 1/2" (1410)	6 1/2" (165)	12.1 (1.12)	2.5 (0.23)	48 1/2" (1232)	14.9 (1.38)
AXW551	2.7 (0.25)	60 3/16" (1529)	6 1/2" (165)	13.1 (1.22)	2.7 (0.25)	48 1/2" (1232)	16.2 (1.51)
AXW61	3.0 (0.28)	67 1/2" (1715)	6 1/2" (165)	14.7 (1.37)	3.0 (0.28)	48 1/2" (1232)	17.9 (1.66)
AXW2281	1.2 (0.11)	26 7/8" (683)	6 1/2" (165)	11.6 (1.08)	2.4 (0.23)	48 1/2" (1232)	15.8 (1.47)
AXW231	1.4 (0.13)	31 3/8" (795)	6 1/2" (165)	13.6 (1.26)	2.8 (0.26)	48 1/2" (1232)	18.0 (1.67)
A335*	1.1 (0.10)	31 5/16" (795)	5" (127)	7.0 (0.65)	1.1 (0.10)	43 11/16" (1110)	10.2 (0.95)
A3535	1.6 (0.14)	36 3/16" (943)	6 1/2" (165)	8.1 (0.75)	1.6 (0.15)	43 11/16" (1110)	11.5 (1.07)
AP32**V**	1.4 (0.12)	31 5/16" (795)	6 1/2" (165)	9.4 (0.87)	1.4 (0.13)	36 7/16" (926)	12.0 (1.12)
AP352**V**	1.6 (0.14)	36 3/16" (919)	6 1/2" (165)	10.9 (1.01)	1.6 (0.15)	36 7/16" (926)	13.6 (1.26)
AP42**V**	2.0 (0.17)	43 3/8" (1102)	6 1/2" (165)	13.1 (1.22)	2.0 (0.18)	36 7/16" (926)	16.0 (1.49)
A212	0.9 (0.08)	19 1/2" (495)	6 1/2" (165)	5.2 (0.48)	1.8 (0.16)	60 5/16" (1532)	8.0 (0.74)
A213	0.9 (0.08)	19 1/2" (495)	6 1/2" (165)	7.8 (0.73)	2.6 (0.25)	60 5/16" (1532)	12.0 (1.12)
A312	1.4 (0.13)	31 5/16" (795)	6 1/2" (165)	8.6 (0.80)	2.8 (0.26)	60 5/16" (1532)	12.0 (1.12)
A313	1.4 (0.13)	31 5/16" (795)	6 1/2" (165)	12.9 (1.20)	4.2 (0.39)	60 5/16" (1532)	18.0 (1.67)
PA3050**	1.4 (0.13)	31 5/16" (795)	6 1/2" (165)	4.3 (0.40)	1.4 (0.13)	60 5/16" (1532)	6.0 (0.56)
PA3060**	1.4 (0.13)	31 5/16" (795)	6 1/2" (165)	4.3 (0.40)	1.4 (0.13)	60 5/16" (1532)	6.0 (0.56)
PA3550**	1.6 (0.15)	36 3/16" (919)	6 1/2" (165)	4.9 (0.46)	1.6 (0.15)	60 5/16" (1532)	6.8 (0.63)
PA3560**	1.6 (0.15)	36 3/16" (919)	6 1/2" (165)	4.9 (0.46)	1.6 (0.15)	60 5/16" (1532)	6.8 (0.63)
PA4060**	2.0 (0.18)	43 3/8" (1102)	6 1/2" (165)	5.9 (0.55)	2.0 (0.18)	60 5/16" (1532)	8.0 (0.74)
AXW312	1.4 (0.13)	31 1/3" (795)	6 1/2" (165)	13.6 (1.26)	2.8 (0.26)	48 1/2" (1232)	18.0 (1.67)

• Top of Subfloor to Top of Inside Sill Stop is calculated based upon a structural header height of 6'-10 1/2" (2096).
• Dimensions in parentheses are in millimeters or square meters.
*Clear opening area of 5.7 sq. ft. or 0.53 m², and clear opening height of 26 1/2" (673) can be obtained by detaching operator from sash.
**Dimensions and calculations are for bottom venting sash.

Area Specifications for Casement/Awning Transom Windows

Window Number	Glass Area Sq. Ft./(m²)	Overall Window Area Sq. Ft./(m²)
CTR1510	0.7 (0.07)	1.4 (0.13)
CTR1810	0.8 (0.07)	1.7 (0.16)
CTR21810	1.7 (0.16)	3.4 (0.32)
CTR31810	2.6 (0.24)	5.1 (0.47)
CTR2010	1.0 (0.09)	2.0 (0.19)
CTR22010	2.1 (0.19)	4.0 (0.37)
CTR32010	3.1 (0.29)	6.0 (0.56)
CTR2410	1.2 (0.11)	2.4 (0.22)
CTR22410	2.5 (0.24)	4.7 (0.44)
CTR32410	3.8 (0.35)	7.1 (0.66)
CTR2810	1.4 (0.13)	2.6 (0.24)
CTR22810	2.9 (0.27)	5.2 (0.49)
CTR3010	1.6 (0.15)	3.0 (0.28)
CTR23010	3.3 (0.31)	6.0 (0.55)
CTR5110	2.8 (0.26)	5.1 (0.47)
CTR2910	1.5 (0.14)	2.8 (0.26)
CTR3410	1.8 (0.17)	3.4 (0.32)
CTR4010	2.2 (0.20)	4.0 (0.37)
CTR4810	2.6 (0.24)	4.7 (0.44)
CTR5210	2.9 (0.27)	5.2 (0.48)
CTR51110	3.4 (0.32)	6.0 (0.56)
CTR6010	3.4 (0.32)	6.0 (0.56)
CTR7010	4.0 (0.37)	7.1 (0.66)
PTR3010	1.6 (0.15)	3.0 (0.28)
PTR3510	1.8 (0.17)	3.4 (0.32)
PTR4010	2.2 (0.20)	4.0 (0.37)
PTR4510	2.4 (0.22)	4.4 (0.41)
PTR5010	2.8 (0.26)	5.0 (0.47)
PTR5510	3.0 (0.28)	5.4 (0.50)
PTR6010	3.4 (0.32)	6.0 (0.56)

• Dimensions in parentheses are in square meters.

Custom Sizes and Specification Formulas

Casement Windows (stationary and venting)

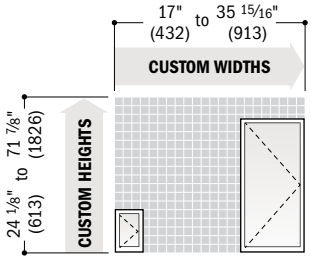

Available in 1/8" (3) increments between minimum and maximum widths and heights. Windows can also be custom sized to match standard sizes ending in 1/16" (1.5). Some restrictions apply; contact your Andersen supplier. Custom sizing is available for single windows only. To achieve custom-size 2- or 3-wide combinations, join custom-size single windows. For minimum rough opening dimensions for joined windows, see specific joining instruction guides. Measurement guide for custom-size windows can be found at **andersenwindows.com/measure**.

Clear Opening	**Width** = window width – 5.81" (148) = (window width – 9.66" (245)) x 1.07 = window width – 9.70" (246)	*Width ≥ 24 1/8" (613) (hinge for widest clear opening)* *Width ≥ 28 3/8" (721) (hinge with wash mode and control bracket)* *Width ≥ 17" (432) (hinge with wash mode)*	**Min. R.O.**	**Width** = window width + 1/2" (13) **Height** = window height + 1/2" (13)
	Height = window height – 4.43" (113) = window height – 4.85" (123)	*Height ≥ 40 13/16" (1037) and < 48" (1219); Width ≥ 28 3/8" (721) and < 31 1/2" (800)* *All other window heights*		
Vent Opening	**Width** = window width – 5.81" (148) = window width – 6.10" (155)	*Width ≥ 24 1/8" (613) (hinge for widest clear opening)* *Width ≥ 17" (432) (hinge with wash mode)*	**Unobst. Gls.**	**Width** = window width – 4.40" (112) **Height** = window height – 4.95" (126)
	Height = window height – 4.43" (113) = window height – 4.85" (123)	*Height ≥ 40 13/16" (1037) and < 48" (1219); Width ≥ 28 3/8" (721) and < 31 1/2" (800)* *All other window heights*		

Awning Windows (stationary and venting)

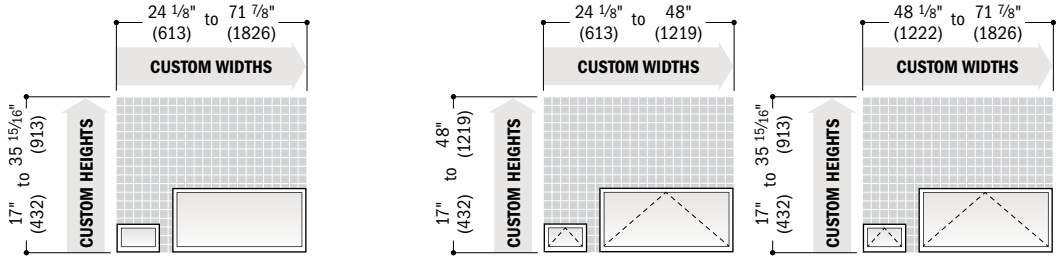

Clear Opening	**Width** = window width – 4.53" (115)		**Min. R.O.**	**Width** = window width + 1/2" (13) **Height** = window height + 1/2" (13)
	Depth = 6.38" (162) = 6.44" (164) = 6.50" (165) = 5" (127)	*Height ≥ 17" (432) and < 20 1/2" (521)* *Height ≥ 20 1/2" (521) and < 24 1/8" (613)* *All other window heights, except A335* *A335*		
Vent Opening	**Width** = window width – 4.53" (115)		**Unobst. Gls.**	**Width** = window width – 4.81" (122) **Height** = window height – 4.51" (115)
	Depth = 6.38" (162) = 6.44" (164) = 6.50" (165) = 5" (127)	*Height ≥ 17" (432) and < 20 1/2" (521)* *Height ≥ 20 1/2" (521) and < 24 1/8" (613)* *All other window heights, except A335* *A335*		

Casement/Awning Picture and Transom Windows

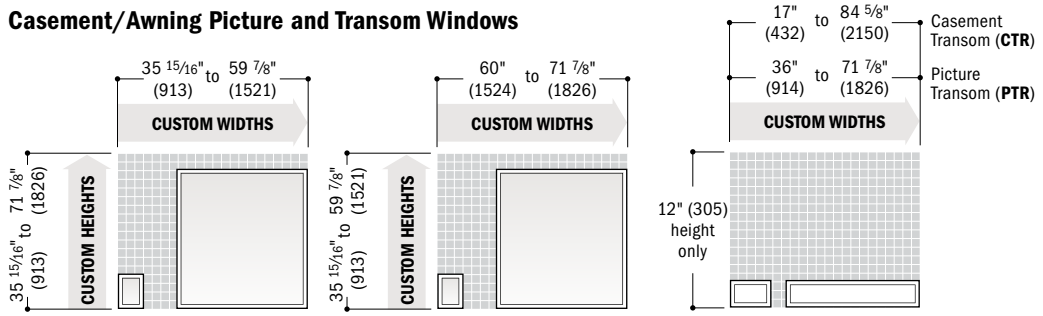

Min. R.O.	**Width** = window width – 1/2" (13) **Height** = window height – 1/2" (13)
Unobst. Gls.	**Width** = window width – 4.80" (122) **Height** = window height – 4.80" (122)

• **Clear Opening** formulas provide dimensions for determining area available for egress. **Vent Opening** formulas provide dimensions for determining area available for passage of air. **Min. R.O.** (minimum rough opening) formulas provide minimum rough opening width and height dimensions. **Unobst. Gls.** (unobstructed glass) formulas provide dimensions for determining area available for passage of light.
• Refer to andersenwindows.com/measure for detailed instructions on how to properly measure for custom-size windows.
• Dimensions in parentheses are in millimeters.

Grille Patterns

	Diamond*	Prairie A	Specified Equal Light with Simulated Meeting Rail	Colonial	Modified Colonial	Modified Colonial with Simulated Meeting Rail	Tall Fractional	Tall Fractional with Simulated Meeting Rail	Short Fractional	Short Fractional with Simulated Meeting Rail	Victorian
Casement		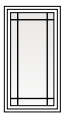		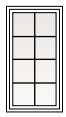	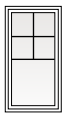		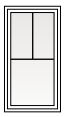		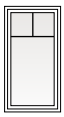	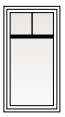	
Awning											
Picture											
Transom											

*Available only in Simulated Divided Light (SDL) configuration and only in 3/4" (19) and 7/8" (22) widths.

Grilles are available with a traditional or contemporary grille bar profile. **Number of lights and overall pattern varies with window size. Patterns may not be available in all configurations or sizes.** Specified equal light and custom patterns are also available. For more grille options, see page 18 or visit **andersenwindows.com/grilles**.

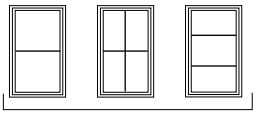

Specified Equal Light Examples

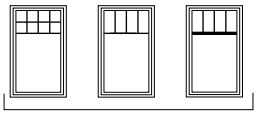

Specified Equal Light Fractional** Examples

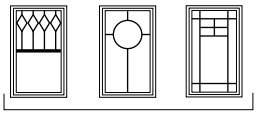

Custom Examples

**Bottom horizontal bar located at center and custom dimensions.

Interior Trim Options

Extension jamb and drywall return bead applications shown. See page 23 for more information. Traditional trim stops shown; contemporary trim stops are also available and are shown in the details on pages 37-39.

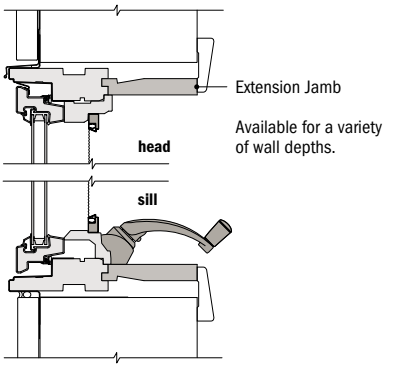

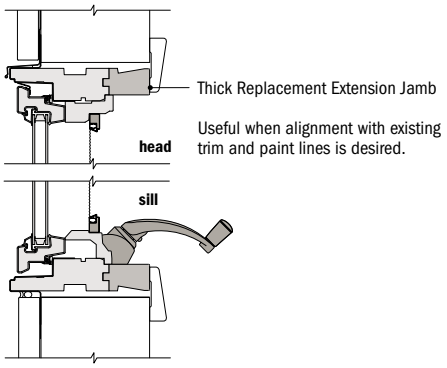

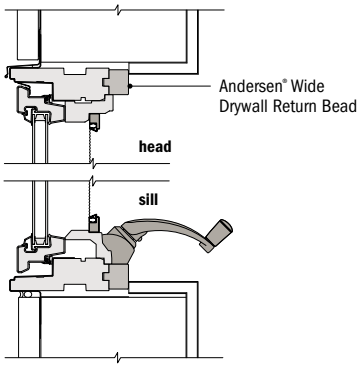

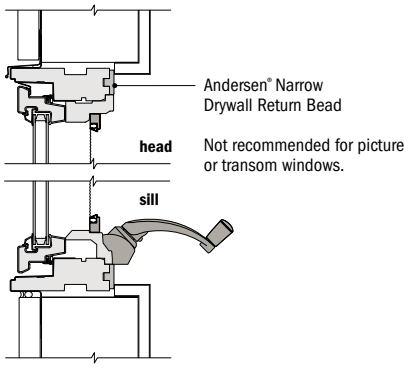

- Light-colored areas are parts included with window. Dark-colored areas are additional Andersen® parts required to complete window assembly as shown.
- Details are for illustration only and are not intended to represent product installation methods or materials. Refer to product installation guides at andersenwindows.com.
- Dimensions in parentheses are in millimeters.

Details for Casement Windows – Traditional Trim Stops

Scale 1 1/2" (38) = 1'-0" (305) – 1:8

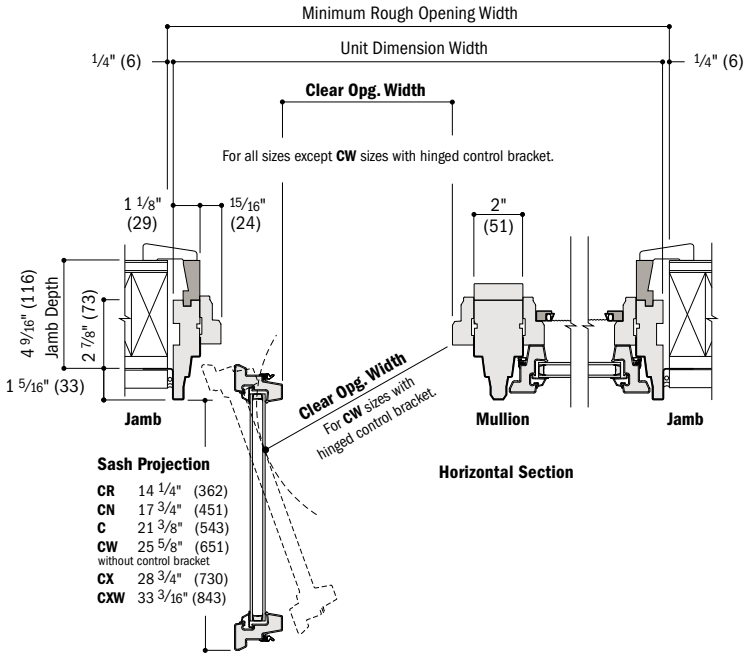

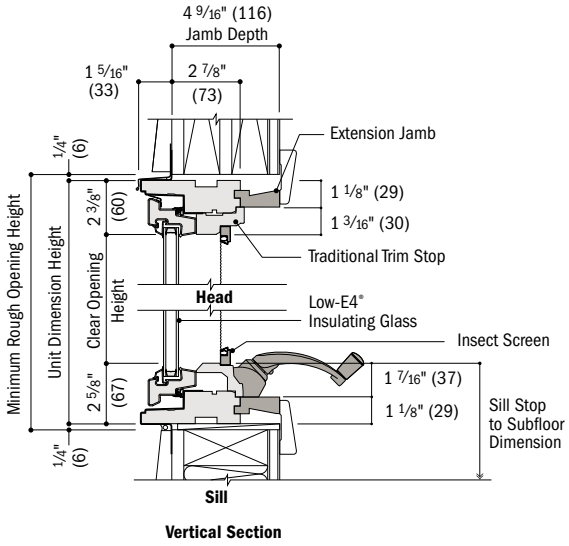

Details for Casement Windows – Contemporary Trim Stops

Scale 1 1/2" (38) = 1'-0" (305) – 1:8

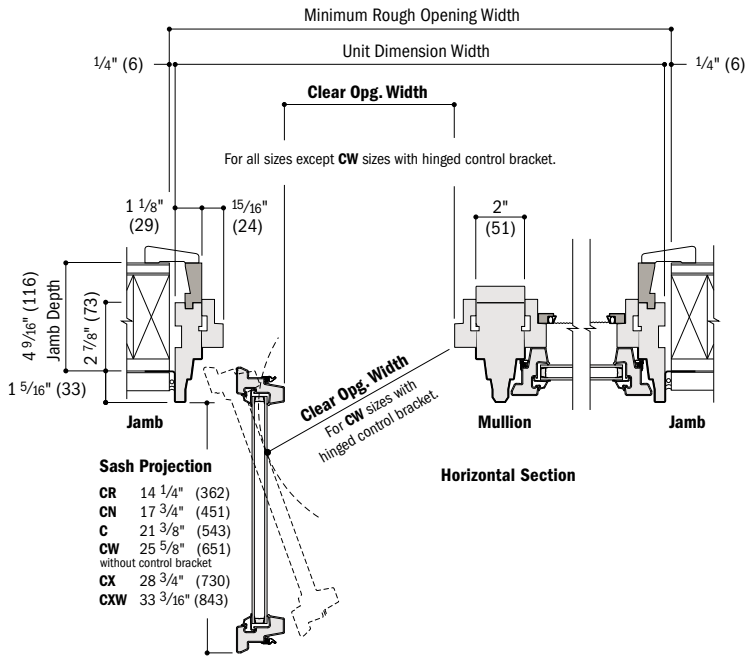

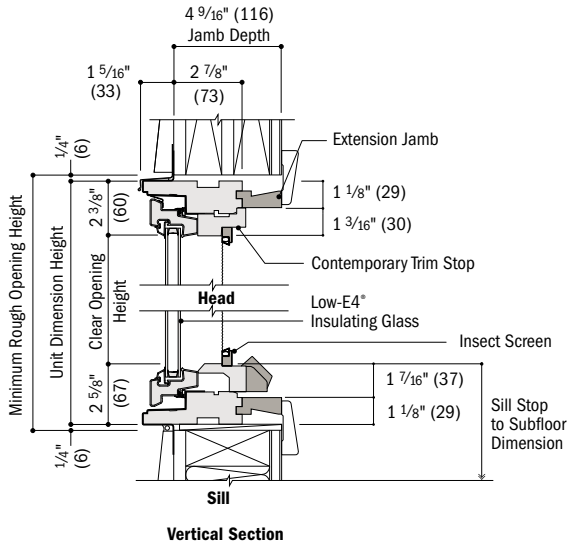

- 4 9/16" (116) overall jamb depth and 2 7/8" (73) base jamb depth measurement is from back side of installation flange.
- Light-colored areas are parts included with window. Dark-colored areas are additional Andersen® parts required to complete window assembly as shown.
- **Minimum rough openings may need to be increased to allow for use of building wraps, flashing, sill panning, brackets, fasteners or other items. See installation information on pages 222-223.**
- Details are for illustration only and are not intended to represent product installation methods or materials. Refer to product installation guides at andersenwindows.com.
- Dimensions in parentheses are in millimeters.

Details for Awning Windows – Traditional Trim Stops

Scale 1 1/2" (38) = 1'-0" (305) – 1:8

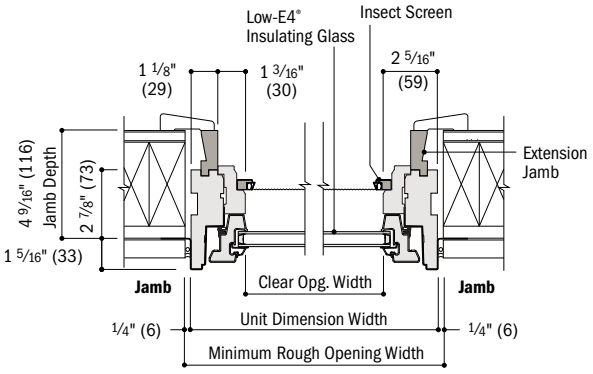

Horizontal Section

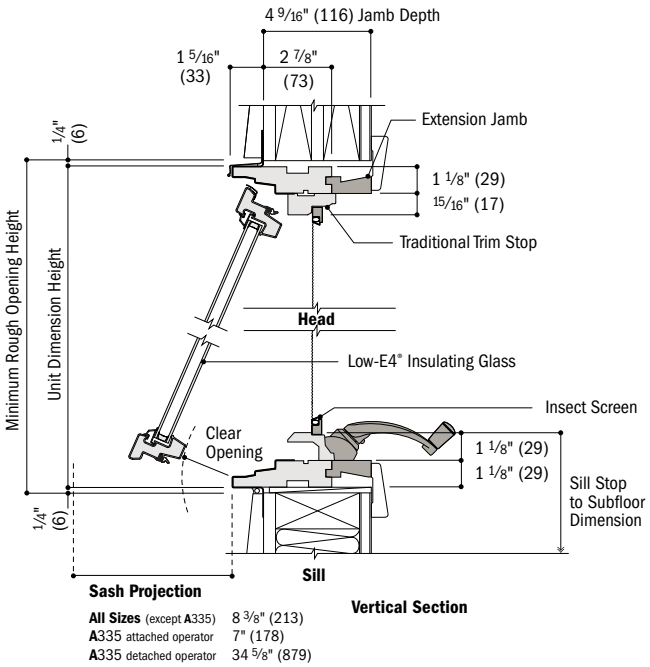

Vertical Section

All Sizes (except **A**335)	8 3/8" (213)
A335 attached operator	7" (178)
A335 detached operator	34 5/8" (879)

Details for Awning Windows – Contemporary Trim Stops

Scale 1 1/2" (38) = 1'-0" (305) – 1:8

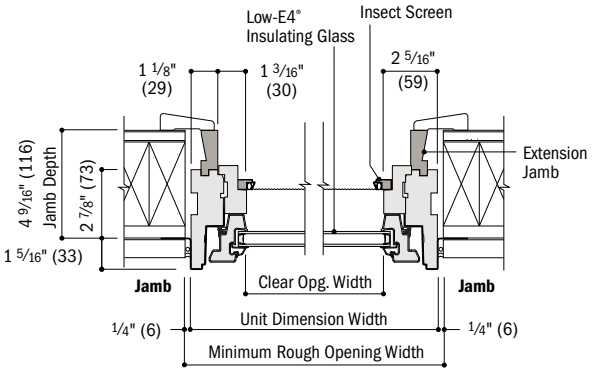

Horizontal Section

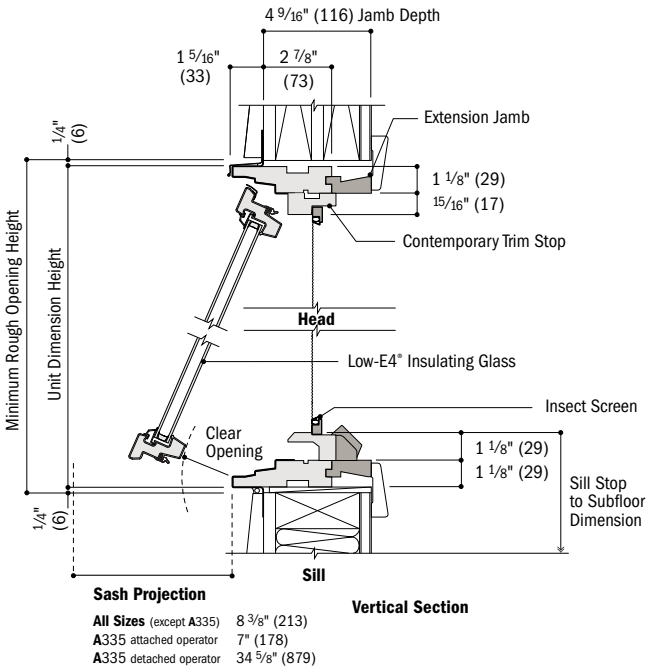

Vertical Section

All Sizes (except **A**335)	8 3/8" (213)
A335 attached operator	7" (178)
A335 detached operator	34 5/8" (879)

- 4 9/16" (116) overall jamb depth and 2 7/8" (73) base jamb depth measurement is from back side of installation flange.
- Light-colored areas are parts included with window. Dark-colored areas are additional Andersen® parts required to complete window assembly as shown.
- **Minimum rough openings may need to be increased to allow for use of building wraps, flashing, sill panning, brackets, fasteners or other items. See installation information on pages 222-223.**
- Details are for illustration only and are not intended to represent product installation methods or materials. Refer to product installation guides at andersenwindows.com.
- Dimensions in parentheses are in millimeters.

Details for Casement/Awning Picture and Transom Windows – Traditional Trim Stops

Scale 1 1/2" (38) = 1'-0" (305) – 1:8

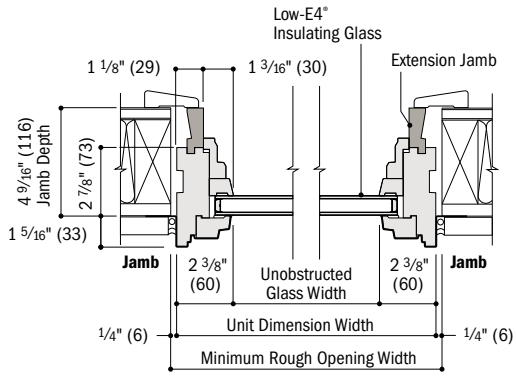

Horizontal Section

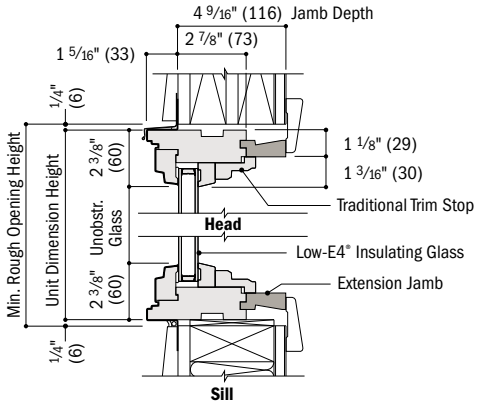

Vertical Section

Details for Casement/Awning Picture and Transom Windows – Contemporary Trim Stops

Scale 1 1/2" (38) = 1'-0" (305) – 1:8

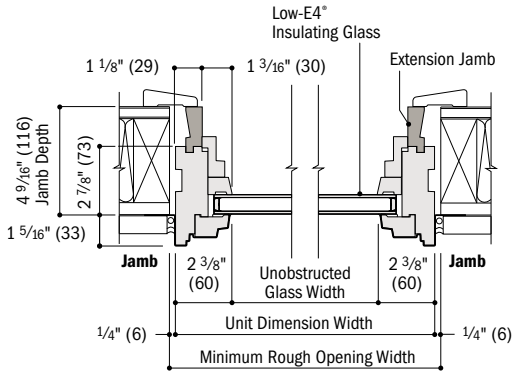

Horizontal Section

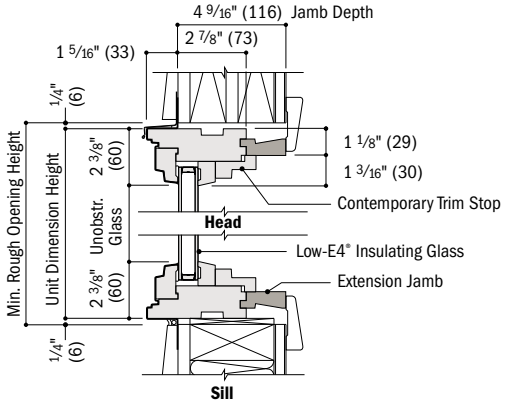

Vertical Section

- 4 9/16" (116) overall jamb depth and 2 7/8" (73) base jamb depth measurement is from back side of installation flange.
- Light-colored areas are parts included with window. Dark-colored areas are additional Andersen® parts required to complete window assembly as shown.
- **Minimum rough openings may need to be increased to allow for use of building wraps, flashing, sill panning, brackets, fasteners or other items. See installation information on pages 222-223.**
- Details are for illustration only and are not intended to represent product installation methods or materials. Refer to product installation guides at andersenwindows.com.
- Dimensions in parentheses are in millimeters.

Horizontal (stack) Joining Details

Scale 1 1/2" (38) = 1'-0" (305) – 1:8

Overall Window Dimension Height

Sum of individual window heights plus 1/8" (3) per join.

Overall Rough Opening Height

Overall window dimension height plus 1/2" (13).

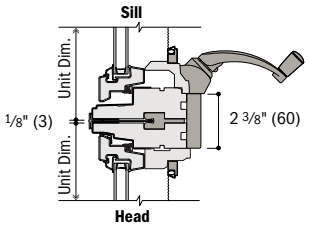

Vertical Section
Casement Over Awning

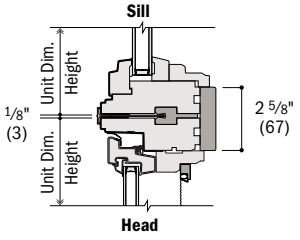

Vertical Section
Picture (**P**) Over Casement

Separate Rough Openings Detail

Scale 1 1/2" (38) = 1'-0" (305) – 1:8

To meet structural requirements or to achieve a wider joined appearance, windows may be installed into separate rough openings having vertical support by others in combination with Andersen® exterior filler and exterior vinyl trim.

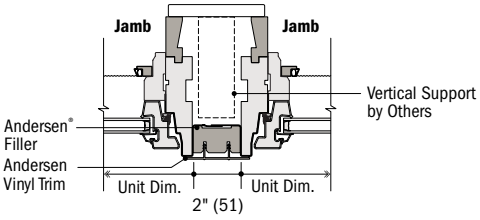

Horizontal Section
Casement and Casement

Vertical (ribbon) Joining Detail

Scale 1 1/2" (38) = 1'-0" (305) – 1:8

Overall Window Dimension Width

Sum of individual window widths plus 1/8" (3) per join.

Overall Rough Opening Width

Overall window dimension width plus 1/2" (13).

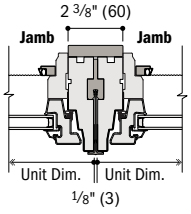

Horizontal Section
Casement to Casement

For more information on joining, refer to the Combination Designs section starting on page 183.

- 4 9/16" (116) overall jamb depth and 2 7/8" (73) base jamb depth measurement is from back side of installation flange.
- Light-colored areas are parts included with window. Dark-colored areas are additional Andersen® parts required to complete window assembly as shown.
- **Minimum rough openings may need to be increased to allow for use of building wraps, flashing, sill panning, brackets, fasteners or other items. See installation information on pages 222-223.**
- Details are for illustration only and are not intended to represent product installation methods or materials. Refer to product installation guides at andersenwindows.com.
- Structural performance of any combination is only as high as the lowest structural performance of any individual product or join in the combination.
- Consult with an architect or structural engineer regarding minimum requirements for structural support members between adjacent rough openings.
- Traditional trim stops shown in joining details; details also apply to products with contemporary trim stops.
- Dimensions in parentheses are in millimeters.



REPLACEMENT CASEMENT & AWNING WINDOWS

Custom Sizes 44
Grille Patterns 36
Window Details 37-39
Product Performance 199

CUSTOM SIZING
in ⅛" (3) increments

CUSTOM SIZES

Dimensions in parentheses are in millimeters.

FEATURES

FRAME

A A seamless one-piece Perma-Shield® rigid vinyl frame cover is secured to the exterior of the wood frame to protect it from moisture and maintain an attractive appearance while minimizing maintenance.

B Predrilled, through-the-jamb fastener holes allow for quick and easy installation.

C Wood frame members are treated with a water-repellent preservative for long-lasting* protection and performance.

D Traditional or contemporary interior trim stops are unfinished pine. Low-maintenance prefinished white, dark bronze and black** interiors are also available. Matching contemporary grilles are available for windows with contemporary stops.

SASH

E Rigid vinyl encases the entire sash, and a vinyl weld protects each sash corner for superior weathertightness. This maintains an attractive appearance and minimizes maintenance.

F Wood core members provide excellent structural stability and energy efficiency.

G Vinyl closed-cell foam weatherstrip is factory installed on the perimeter of the sash.

GLASS

H Glass spacers are available in black, stainless steel and white.

I A glazing bead and silicone provide superior weathertightness and durability.

J High-Performance glass options include:

- Low-E4® glass
- Low-E4 HeatLock® glass
- Low-E4 SmartSun™ glass
- Low-E4 SmartSun HeatLock glass
- Low-E4 Sun glass
- Low-E4 PassiveSun® HeatLock glass

Tempered and other glass options are available. Contact your Andersen supplier.

A removable translucent film helps shield the glass from damage during delivery and construction, and simplifies finishing at the job site.

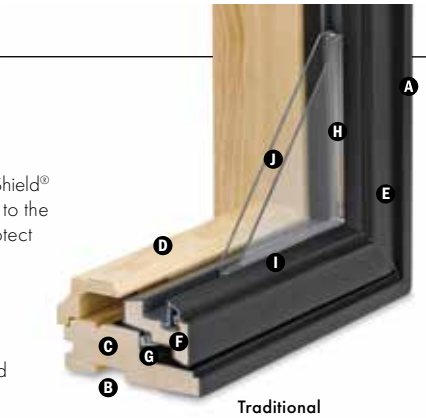

Traditional



Contemporary

Patterned Glass

Patterned glass options are available. See page 11 for more details.

HARDWARE

Smooth Control Hardware System



The smooth control hardware system employs a worm gear drive for easy operation. Units with wash mode have hinges that move the sash away from the frame to provide easier glass cleaning. CXW15, CXW155, CXW16 and CXW25 sizes are not available with wash mode. Hardware style and finish must be specified. Operator handle and cover are sold separately.

Single-Action Casement Lock



On casement windows, a single-action lock easily releases all concealed locking points on the sash, while the reach-out action eliminates binding when closing. The lock handle finish matches the specified hardware finish.

EXTERIORS & INTERIORS

EXTERIOR COLORS

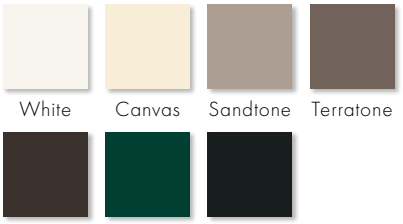

INTERIOR OPTIONS

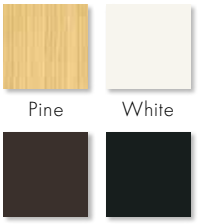

HARDWARE Sold Separately



CONTEMPORARY FOLDING

Black | Bright Brass
Oil Rubbed Bronze | **Satin Nickel**
Stone | White



TRADITIONAL FOLDING

Antique Brass | Black
Bright Brass | Distressed Bronze
Distressed Nickel | Oil Rubbed Bronze
Satin Nickel | **Stone** | White

Folding handles avoid interference with window treatments.



CLASSIC SERIES™

Stone | **White**



ESTATE™

Antique Brass | Bright Brass
Distressed Bronze | **Distressed Nickel**
Oil Rubbed Bronze | Satin Nickel

Bold name denotes finish shown.

HARDWARE FINISHES

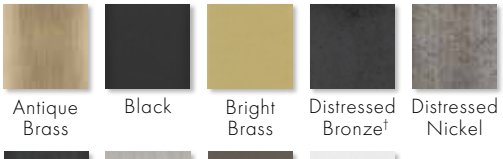

*Visit andersenwindows.com/warranty for details.

**Products with dark bronze or black interiors have matching exteriors.

†These finishes are "living finishes" that will change with time and use, see limited warranty for details.

Naturally occurring variations in grain, color and texture of wood make each window one of a kind. All wood interiors are unfinished unless a finish is specified.

Printing limitations prevent exact replication of colors and finishes. See your Andersen supplier for actual color and finish samples.

Dimensions in parentheses are in millimeters.

Awning Sash Locks



Awning sash locks provide an added measure of security and weathertightness. Hardware style and finish options are compatible with Andersen casement windows to ensure consistency in appearance when used in combination designs.

INSTALLATION

Included Installation Materials



Flat self-hanging shims, backer rod, installation screws and complete instructions are included with each replacement window. See the measurement guide and worksheet at andersenwindows.com/measure.

CAUTION: Painting and staining may cause damage to rigid vinyl. Andersen does not warrant the adhesion or performance of homeowner-applied paint over vinyl or other factory-coated surfaces. For vinyl painting instructions and preparation, contact your Andersen supplier. Do not paint weatherstrip. Creosote-based stains should not come in contact with Andersen products. Abrasive cleaners or solutions containing corrosive solvents should not be used on Andersen products. See page 223 for a complete list of cautions.

*Visit andersenwindows.com/warranty for details.

**TruScene insect screens let in over 25% more fresh air than standard Andersen fiberglass insect screens.

Dimensions in parentheses are in millimeters.

ACCESSORIES Sold Separately

FRAME

Extension Jambs



The base jamb depth is 2 7/8" (73). Extension jambs are available in unfinished pine, maple and oak, or prefinished white, dark bronze and black. Some sizes may be veneered.

Factory-applied and non-applied extension jambs are available in 1/16" (1.5) increments between 4 9/16" (116) and 7 1/8" (181). Extension jambs can be factory applied to either three sides (stool and apron) or four sides (picture frame casing).

For overall jamb depths greater than 7 1/8" (181), interior extension jambs are available in 1/16" (1.5) increments between 7 1/8" (181) and 9" (229) for field application. They are available in 8' (2438) and 12' (3658) lineals.

Thick Replacement Extension Jambs



To help preserve original alignment of trim and paint lines in replacement situations, special 1 1/8" (29)-thick replacement extension jambs are available. Factory-applied and non-applied extension jambs are available in 1/16" (1.5) increments between 4 9/16" (116) and 7 1/8" (181). Non-applied extension jambs are available in 12' (3658) lineals. Detail on page 36.

Drywall Return Bead



A narrow or wide drywall return bead is available, with unfinished pine, or prefinished white, dark bronze and black interiors. Can be ordered factory applied or in non-applied lineals. Detail on page 36.

HARDWARE

Corrosion-Resistant Components

Corrosion-resistant hinge and operator arm hardware is designed for applications in harsh and corrosive environments such as heavy industrial or coastal areas.*

Window Opening Control Device



A window opening control device is available, which limits sash travel to less than 4" (102) when the window is first opened. Available factory applied, or as a field-applied kit in black, stone and white.

Power Operator for Awning Windows



Awning windows can be ordered with an operator enhanced by PowerAssist™ technology that opens and closes the window with the touch of a button, and eliminates the need for sash locks. Easy to install, the 24-volt system features a concealed window power drive, battery backup and a moisture sensor that closes the window when it rains. It is controlled by a wall-mounted console that includes a power box, battery, touch pad and mounting bracket. A remote control is sold separately. Windows can be ordered factory prepped or as a field-applied kit. Power driver requires field installation. Available for windows up to 5' (1524) wide. Not available for windows with Stormwatch® Protection or PG upgrade

SPECIAL OPERATOR HANDLES

Available in Classic Series™ design only.

Compact Operator Handle



Specially designed for situations where window treatments interfere with handle operation. Available in a stone or white finish.

Operator Spline Cover



An operator spline cover is an attractive cap that covers the roto operator stud when the handle that controls access or operation of the window has been removed. The operator spline cover should not be used on any window designated or intended for emergency escape or rescue. Consult your local building code official for egress code requirements in your area.

Metal T-Handle



Our smallest operator handle, the metal T-handle, may make it more difficult for young children aged 5 and under to open the window. For more information on child safety, write:

Andersen Corporation
LookOut For Kids® Program
100 Fourth Avenue North
Bayport, MN 55003
Call: 800-313-8889
Email: lofk@andersencorp.com
Website: andersenwindows.com/windowsafety

Easy-Grip Handle

A larger knob makes it easier to grip and operate. Available in a stone or white finish.



ANDERSEN® ART GLASS

Andersen art glass panels come in a variety of original patterns. For more information, see the Art Glass section starting on page 175 or visit andersenwindows.com/artglass.

INSECT SCREENS

TruScene® Insect Screens



Our TruScene insect screens let in over 25% more fresh air** and provide 50% greater clarity than conventional Andersen insect screens, all while keeping out unwanted small insects. For casement and awning windows, frames are available in white, stone, dark bronze and black, or with pine veneer frame interiors to blend with the wood interior of the window.

Conventional Insect Screens

Conventional insect screens have charcoal gray powder-coated aluminum screen mesh. Frames are available in white, stone, dark bronze and black.

GRILLES & EXTERIOR TRIM

Grilles are available in a variety of configurations and widths. See page 18 for details. Available with Andersen exterior trim. See the Exterior Trim section starting on page 177.

Custom Sizes and Specification Formulas

Casement Windows (stationary and venting)

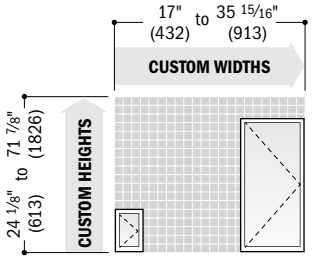

Available in 1/8" (3) increments between minimum and maximum widths and heights. Windows can also be custom sized to match standard sizes ending in 1/16" (1.5). Some restrictions apply; contact your Andersen supplier. Custom sizing is available for single windows only. To achieve custom-size 2- or 3-wide combinations, join custom-size single windows. For minimum rough opening dimensions for joined windows, see specific joining instruction guides. Measurement guide for custom-size windows can be found at **andersenwindows.com/measure**.

Clear Opening	**Width** = window width – 5.81" (148) = (window width – 9.66" (245)) x 1.07 = window width – 9.70" (246)	*Width ≥ 24 1/8" (613) (hinge for widest clear opening)* *Width ≥ 28 3/8" (721) (hinge with wash mode and control bracket)* *Width ≥ 17" (432) (hinge with wash mode)*	**Min. R.O.**	**Width** = window width + 1/2" (13) **Height** = window height + 1/2" (13)
	Height = window height – 4.43" (113) = window height – 4.85" (123)	*Height ≥ 40 13/16" (1037) and < 48" (1219); Width ≥ 28 3/8" (721) and < 31 1/2" (800)* *All other window heights*		
Vent Opening	**Width** = window width – 5.81" (148) = window width – 6.10" (155)	*Width ≥ 24 1/8" (613) (hinge for widest clear opening)* *Width ≥ 17" (432) (hinge with wash mode)*	**Unobst. Gls.**	**Width** = window width – 4.40" (112) **Height** = window height – 4.95" (126)
	Height = window height – 4.43" (113) = window height – 4.85" (123)	*Height ≥ 40 13/16" (1037) and < 48" (1219); Width ≥ 28 3/8" (721) and < 31 1/2" (800)* *All other window heights*		

Awning Windows (stationary and venting)

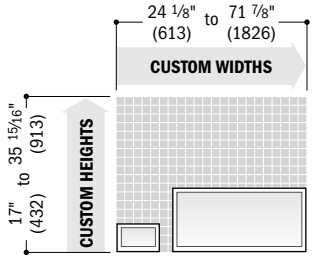

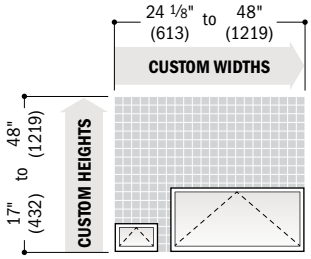

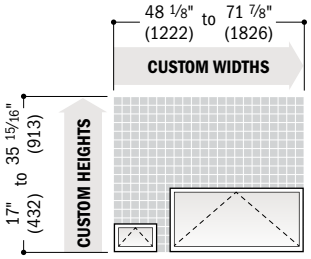

Clear Opening	**Width** = window width – 4.53" (115)		**Min. R.O.**	**Width** = window width + 1/2" (13) **Height** = window height + 1/2" (13)
	Depth = 6.38" (162)	*Height ≥ 17" (432) and < 20 1/2" (521)*		
	= 6.44" (164)	*Height ≥ 20 1/2" (521) and < 24 1/8" (613)*		
	= 6.50" (165)	*All other window heights, except A335*		
	= 5" (127)	*A335*		
Vent Opening	**Width** = window width – 4.53" (115)		**Unobst. Gls.**	**Width** = window width – 4.81" (122) **Height** = window height – 4.51" (115)
	Depth = 6.38" (162)	*Height ≥ 17" (432) and < 20 1/2" (521)*		
	= 6.44" (164)	*Height ≥ 20 1/2" (521) and < 24 1/8" (613)*		
	= 6.50" (165)	*All other window heights, except A335*		
	= 5" (127)	*A335*		

Picture and Transom Windows

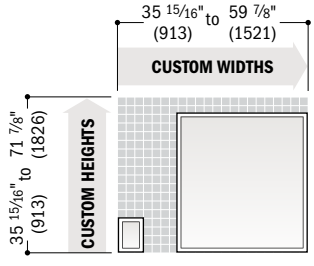

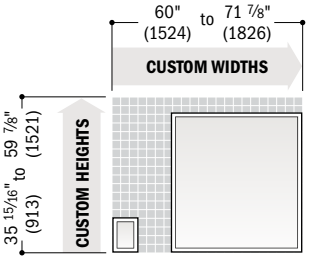

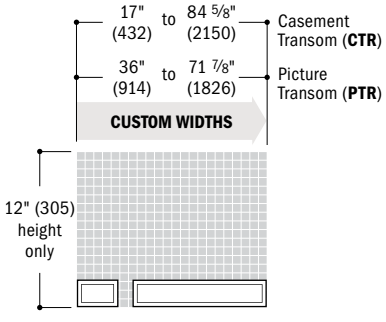

Min. R.O.	**Width** = window width – 1/2" (13) **Height** = window height – 1/2" (13)	
Unobst. Gls.	**Width** = window width – 4.80" (122) **Height** = window height – 4.80" (122)	

• **Clear Opening** formulas provide dimensions for determining area available for egress. **Vent Opening** formulas provide dimensions for determining area available for passage of air. **Min. R.O.** (minimum rough opening) formulas provide minimum rough opening width and height dimensions. **Unobst. Gls.** (unobstructed glass) formulas provide dimensions for determining area available for passage of light.
• Refer to andersenwindows.com/measure for detailed instructions on how to properly measure for custom-size windows.
• Dimensions in parentheses are in millimeters.



COMPLEMENTARY CASEMENT WINDOWS

Custom Sizes 48
Window Details 49-50
Product Performance 199

CUSTOM SIZING
in ⅛" (3) increments

CUSTOM SIZES

Dimensions in parentheses are in millimeters.

COMPLEMENTARY CASEMENT WINDOWS

FEATURES

FRAME

A Heavy-duty extruded aluminum cladding protects the frame exterior, providing low-maintenance durability. The standard cladding finish meets the AAMA 2604 specification. An optional finish that meets the AAMA 2605 specification is also available.

B Wood frame members are treated with a water-repellent preservative for long-lasting* protection and performance.

C Interior stops are unfinished. Low-maintenance prefinished white, dark bronze and black interiors are also available.

A vinyl installation flange extends 1 ½" (38) around the perimeter of the unit for positioning and locating. Installation clips are standard for increased structural anchoring to building members. Mounted around the frame perimeter, the clips rotate into position and can be bent into place against the framing members to suit all jamb conditions.

SASH

D Wood core members provide excellent structural stability and energy efficiency.

E Heavy-duty extruded aluminum cladding protects the sash exterior, providing low-maintenance durability.

F Weatherstrip throughout the unit provides a long-lasting,* energy-efficient seal. A rain skirt is factory installed on the perimeter of the sash.

GLASS

G Glass spacers are available in black, stainless steel and white.

H A silicone glazing bead combined with two-sided silicone tape provide superior weathertightness.

I High-Performance glass options include:

- Low-E4® glass
- Low-E4 HeatLock® glass
- Low-E4 SmartSun™ glass
- Low-E4 SmartSun HeatLock glass
- Low-E4 Sun glass
- Low-E4 PassiveSun® HeatLock glass

Tempered and other glass options are available. Contact your Andersen supplier.

A removable translucent film helps shield the glass from damage during delivery and construction, and simplifies finishing at the job site.



Patterned Glass

Patterned glass options are available. See page 11 for more details.

HARDWARE

Smooth Control Hardware System



The smooth control hardware system employs a worm gear drive for easy operation. Units with wash mode have hinges that move the sash away from the frame to provide easier glass cleaning on rectangular windows. Arch and Springline™ casement windows use the same smooth control hardware system with stainless steel butt hinges for smooth operation. Hardware style and finish must be specified. Operator handle and cover are sold separately.

Single-Action Casement Lock



A single-action lock easily releases all concealed locking points on the sash, while the reach-out action eliminates binding when closing. The lock handle finish matches the specified hardware finish option.

EXTERIORS & INTERIORS

EXTERIOR & INTERIOR COLORS



Additional standard interior colors include birch bark or primed for paint. Painted colors are on pine. For custom exterior and interior colors, and interior colors on maple, contact your Andersen supplier.

INTERIOR WOOD SPECIES



Additional standard wood species include vertical-grain Douglas fir, mahogany,** alder and cherry. For mixed-grain Douglas fir, hickory, white oak and walnut, contact your Andersen supplier. All wood interiors are unfinished unless a paint color is specified.

HARDWARE Sold Separately



CONTEMPORARY FOLDING

Black | Bright Brass
Oil Rubbed Bronze | Satin Nickel
Stone | White



TRADITIONAL FOLDING

Antique Brass | Black | Bright Brass
Distressed Bronze | Distressed Nickel
Oil Rubbed Bronze | Satin Nickel
Stone | White

Folding handles avoid interference with window treatments.



CLASSIC SERIES™

Stone | **White**



ESTATE™

Antique Brass | Bright Brass
Distressed Bronze | Distressed Nickel
Oil Rubbed Bronze | Satin Nickel

Bold name denotes finish shown.

HARDWARE FINISHES

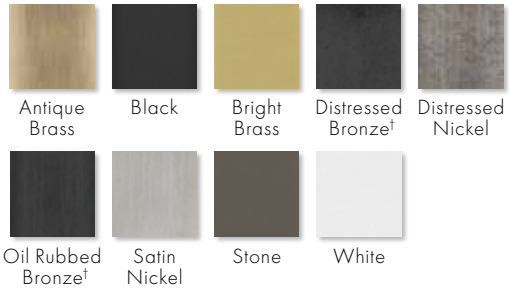

*Visit andersenwindows.com/warranty for details.

**Actual wood species is either Sapele or Sipo, both non-endangered species grown in Africa, with color and characteristics similar to Central American mahoganies.

†These finishes are "living finishes" that will change with time and use, see limited warranty for details.

Naturally occurring variations in grain, color and texture of wood make each window one of a kind. All wood interiors are unfinished unless a finish is specified.

Printing limitations prevent exact replication of colors and finishes. See your Andersen supplier for actual color and finish samples.

Dimensions in parentheses are in millimeters.

FRENCH CASEMENTS



Andersen® complementary French casement windows allow both sash to swing outward from the center, eliminating a center mullion post. They offer smooth operating multi-point locking mechanisms and hinges. The multi-point lock is activated with a single turn of a handle that simultaneously secures both sash. French casement windows have a unique locking handle that is available in black, bright brass, oil rubbed bronze, satin nickel, stone and white finishes.

SHAPES

Our line of complementary casement windows are available in a variety of shapes, see page 48 for details.

ACCESSORIES Sold Separately

FRAME

Extension Jambs





Base jamb depths are 4 9/16" (116) or 2 7/8" (73). Extension jambs are available in 1/16" (1.5) increments between 4 9/16" (116) and 12" (305) Available for job site application or can be factory applied.

Extension jambs are available in unfinished pine, maple and oak, or prefinished white, dark bronze and black. Additional wood species and prefinished colors are available.

HARDWARE

Corrosion-Resistant Components



Corrosion-resistant hinge and operator arm hardware is designed for applications in harsh and corrosive environments such as heavy industrial or coastal areas.* Shown above on a 400 Series casement window.

Window Opening Control Device



A window opening control device is available, which limits sash travel to less than 4" (102) when the window is first opened. Available factory applied, or as a field-applied kit in black, stone and white. Not available for French casement windows.

SPECIAL OPERATOR HANDLES

Available in Classic Series™ design only.

Compact Operator Handle



Specially designed for situations where window treatments interfere with handle operation. Available in a stone or white finish.

Operator Spline Cover



An operator spline cover is an attractive cap that covers the roto operator stud when the handle that controls access or operation of the window has been removed. The operator spline cover should not be used on any window designated or intended for emergency escape or rescue. Consult your local building code official for egress code requirements in your area.

Metal T-Handle



Our smallest operator handle, the metal T-handle, may make it more difficult for young children aged 5 and under to open the window. For more information on child safety, write:

Andersen Corporation
LookOut For Kids® Program
100 Fourth Avenue North
Bayport, MN 55003
Call: **800-313-8889**
Email: **lofk@andersencorp.com**
Website: **andersenwindows.com/windowsafety**

Easy-Grip Handle

A larger knob makes it easier to grip and operate. Available in a stone or white finish.



INSECT SCREENS

TruScene® Insect Screens



Our TruScene insect screens let in over 25% more fresh air** and provide 50% greater clarity than conventional Andersen insect screens, all while keeping out unwanted small insects. For casement and awning windows, frames are available in white, stone, dark bronze and black, or with pine veneer frame interiors to blend with the wood interior of the window.

Conventional Insect Screens

Conventional insect screens have black fiberglass screen mesh. Optional charcoal gray powder-coated aluminum screen mesh is available. Frames are available in white, stone, dark bronze and black.

CAUTION: Do not paint weatherstrip. Creosote-based stains should not come in contact with Andersen products. Abrasive cleaners or solutions containing corrosive solvents should not be used on Andersen products.

*Visit andersenwindows.com/warranty for details.
**TruScene insect screens let in over 25% more fresh air than standard Andersen fiberglass insect screens.
Dimensions in parentheses are in millimeters.

COMPLEMENTARY CASEMENT WINDOWS

Shapes and Sizes

Windows are available in standard and custom sizes. Casement picture and transom windows are also available. Contact your Andersen supplier for more information.

Custom Sizes

Choose left, right or stationary as viewed from the exterior. Custom-size windows are available in 1/8" (3) increments between minimum and maximum widths and heights.

French Casement

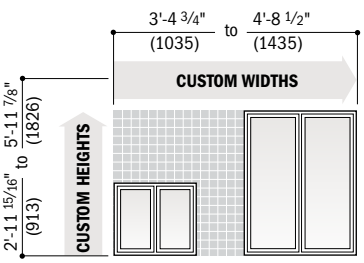

Springline™ French Casement

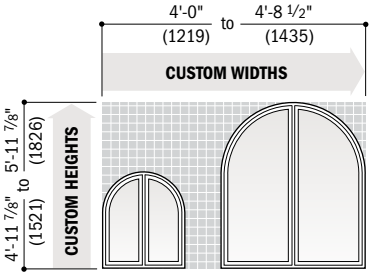

Arch French Casement

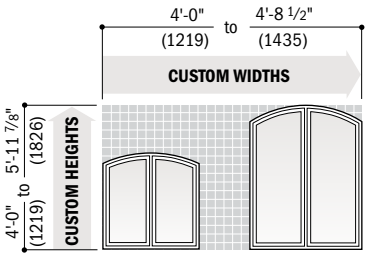

Springline™ Casement*

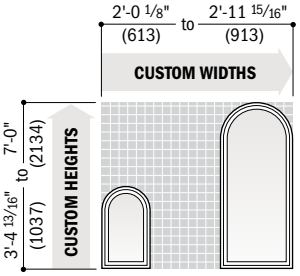

Springline™ Flanker Casement*

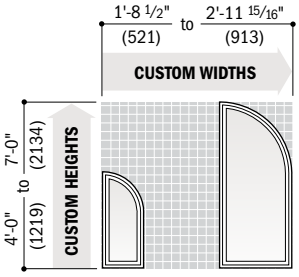

Twin Springline™ Casement*

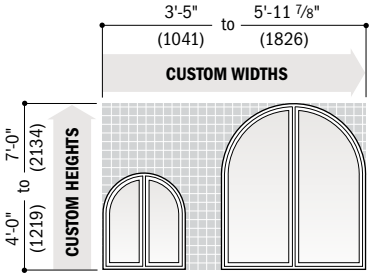

Arch Casement*

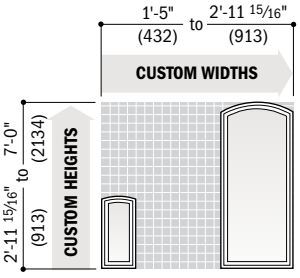

Twin Arch Casement*

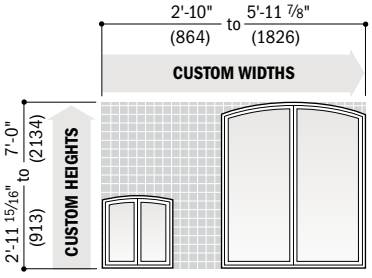

Triple Arch Casement*

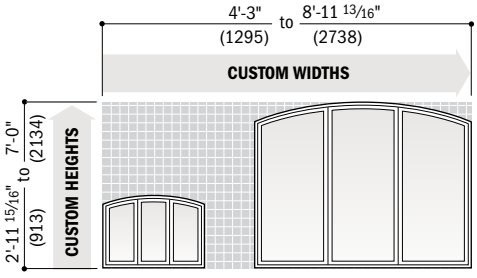

Trapezoid Casement*

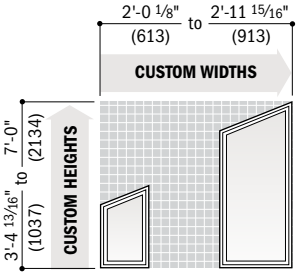

Unequal Leg Arch Casement

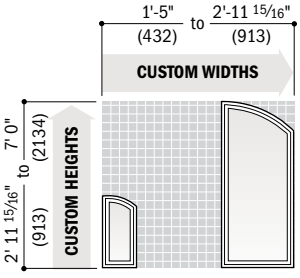

Rectangular Casement

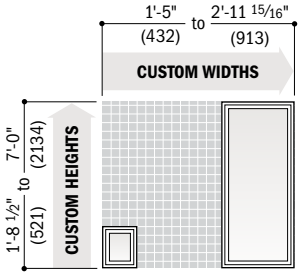

• Rough openings may need to be increased to allow for use of building wraps, flashing, sill panning, brackets, fasteners or other items. See pages 222-223 for more details.
• Dimensions in parentheses are in millimeters.
*For exterior wall cladding that extends beyond the face of the window, there may be a reduction in the amount of opening "swing" when the top of the sash touches the wall cladding.

Details for Complementary French Casement Windows – Venting

Scale 1 1/2" (38) = 1'-0" (305) – 1:8

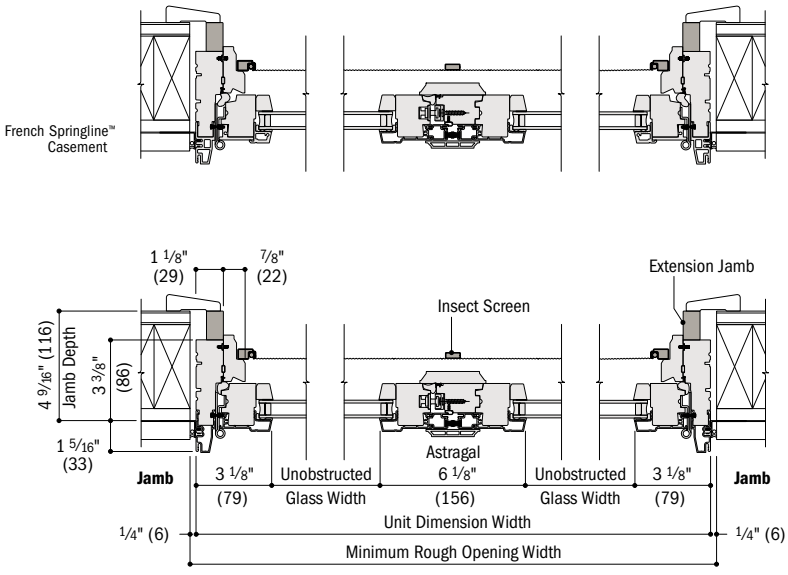

Horizontal Section

French Casement and French Arch Casement

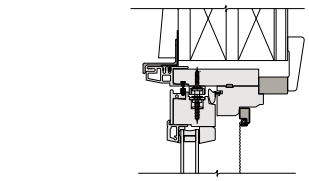

Head - Curved

French Springline™ and French Arch Casement

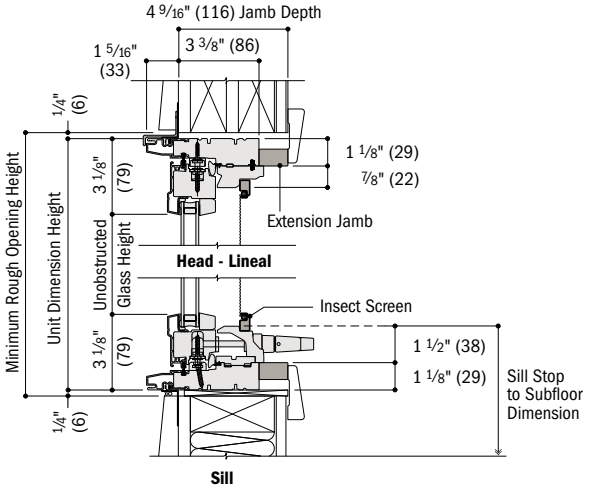

Vertical Section

French Casement and French Arch Casement

Details for Complementary French Casement Windows – Stationary

Scale 1 1/2" (38) = 1'-0" (305) – 1:8

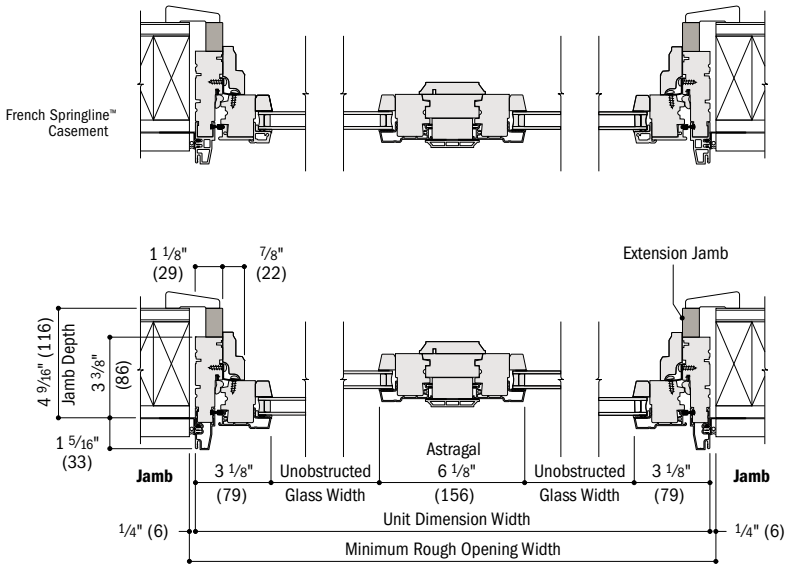

Horizontal Section

French Casement and French Arch Casement

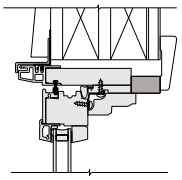

Head - Curved

French Springline™ and French Arch Casement

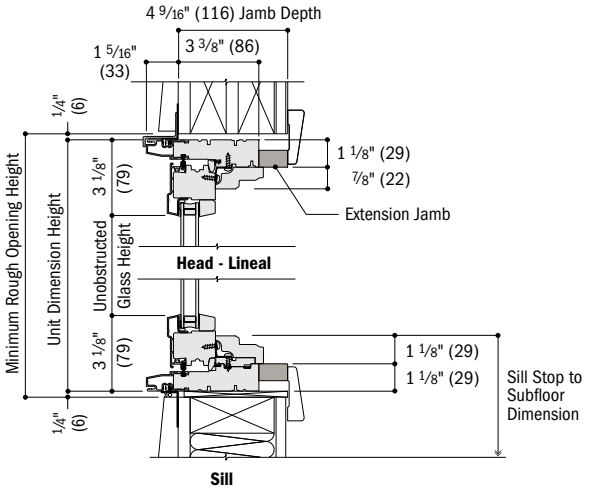

Vertical Section

French Casement and French Arch Casement

- 4 9/16" (116) overall jamb depth and 3 3/8" (86) base jamb depth measurement is from back side of installation flange.
- Light-colored areas are parts included with window. Dark-colored areas are additional Andersen® parts required to complete window assembly as shown.
- **Minimum rough openings may need to be increased to allow for use of building wraps, flashing, sill panning, brackets, fasteners or other items. See installation information on pages 222-223.**
- Details are for illustration only and are not intended to represent product installation methods or materials. Refer to unit installation guides at andersenwindows.com.
- Dimensions in parentheses are in millimeters.

Details for Complementary Casement Windows – Venting

Scale 1 1/2" (38) = 1'-0" (305) – 1:8

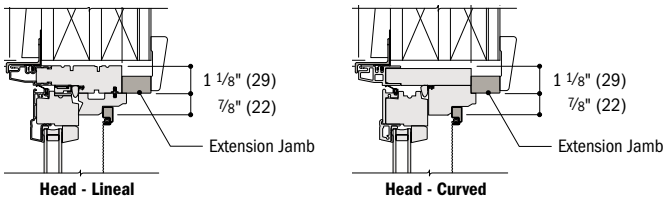

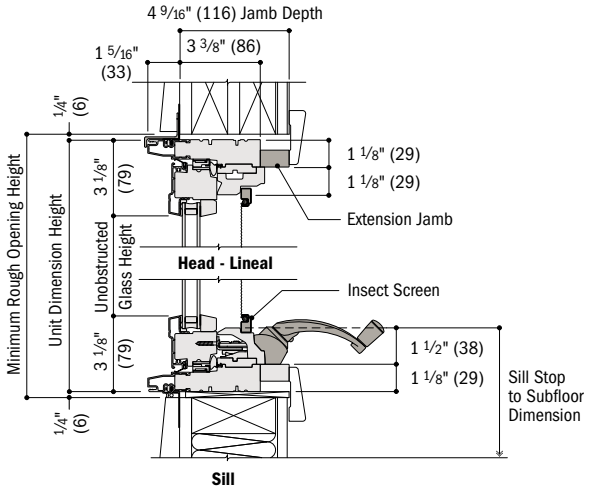

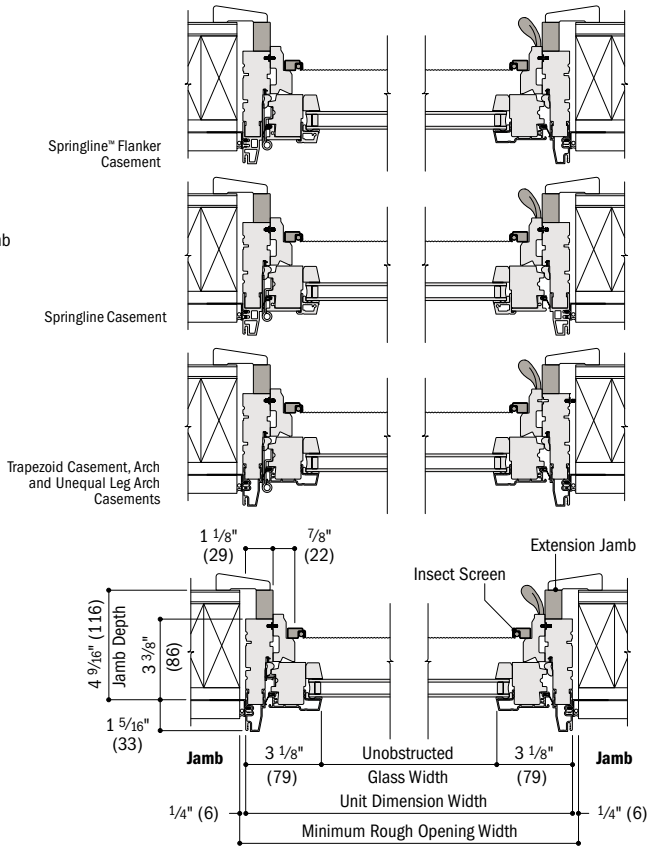

Details for Complementary Casement Windows – Stationary

Scale 1 1/2" (38) = 1'-0" (305) – 1:8

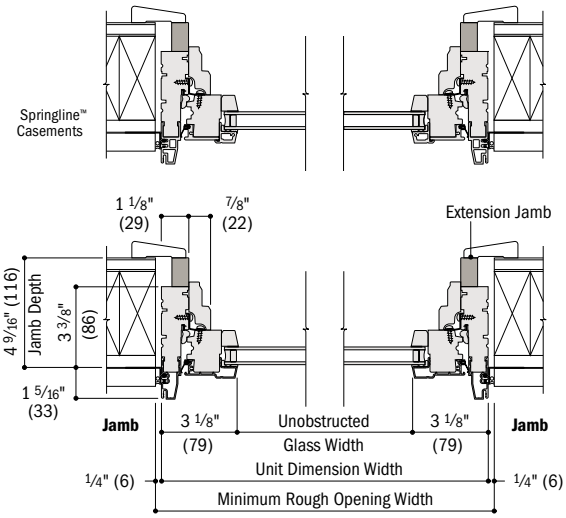

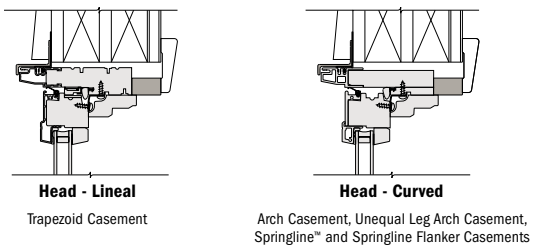

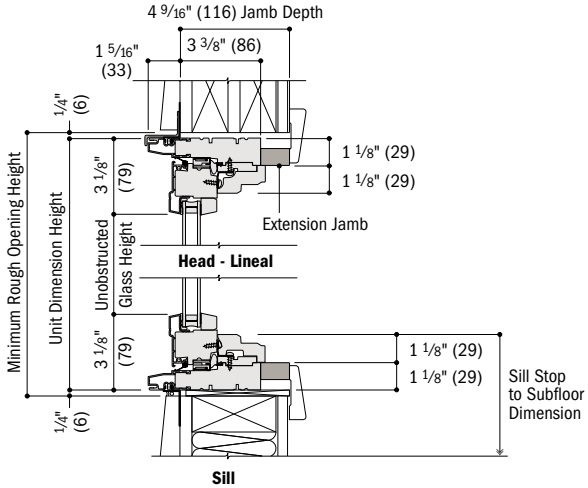

- 4 9/16" (116) overall jamb depth and 3 3/8" (86) base jamb depth measurement is from back side of installation flange.
- Light-colored areas are parts included with window. Dark-colored areas are additional Andersen® parts required to complete window assembly as shown.
- **Minimum rough openings may need to be increased to allow for use of building wraps, flashing, sill panning, brackets, fasteners or other items. See installation information on pages 222-223.**
- Details are for illustration only and are not intended to represent product installation methods or materials. Refer to unit installation guides at andersenwindows.com.
- Dimensions in parentheses are in millimeters.

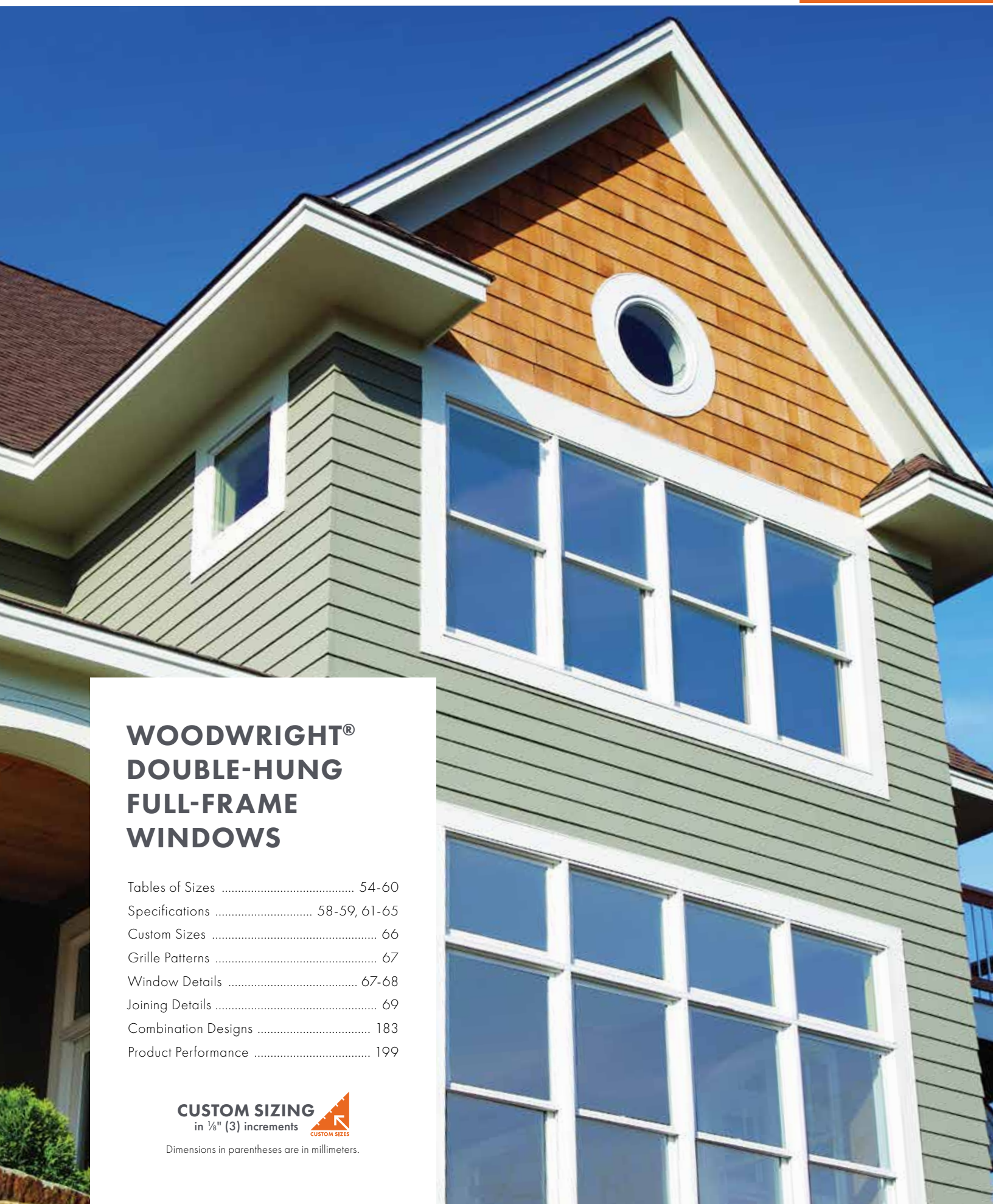

WOODWRIGHT® DOUBLE-HUNG FULL-FRAME WINDOWS

Tables of Sizes 54-60
Specifications 58-59, 61-65
Custom Sizes 66
Grille Patterns 67
Window Details 67-68
Joining Details 69
Combination Designs 183
Product Performance 199

CUSTOM SIZING
in ⅛" (3) increments

CUSTOM SIZES

Dimensions in parentheses are in millimeters.

WOODWRIGHT® DOUBLE-HUNG FULL-FRAME WINDOWS

FEATURES

FRAME

Ⓐ Perma-Shield® exterior cladding protects the frame – beautifully. Best of all, it's low maintenance and never needs painting.*

Ⓑ Sill members are constructed with a wood core and Fibrex® material exterior for exceptional, long-lasting* performance.

Ⓒ Natural wood stops are available in pine, maple, oak and prefinished white. Wood jamb liners add beauty and authenticity to the window interior.

Ⓓ A factory-applied rigid vinyl installation flange on the head, sill and sides of the outer frame helps secure the unit to the structure.

Ⓔ Multiple weatherstrip systems help provide a barrier against wind, rain and dust. The combination of spring-tension vinyl, rigid vinyl and flexible bulb weatherstrip is efficient and effective.

Ⓕ For units with a white exterior color, the exterior jamb liner is white. For all other units, the exterior jamb liner is gray.

SASH

Ⓖ Balancers in the sash enable contractors to screw through the jamb during installation without interfering with the window's operation.

Wood Jamb Liner

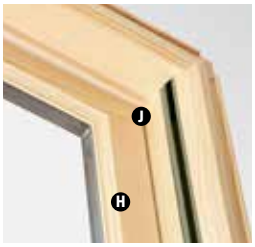

Ⓗ The sash interior is natural wood with classic chamfer detailing. Available in pine, maple, oak and prefinished white.

Ⓘ The low-maintenance sash exterior provides long-lasting* protection and performance. Sash exteriors on most units include Fibrex material.

Ⓙ Sash joints simulate the look of traditional mortise-and-tenon construction inside and out.

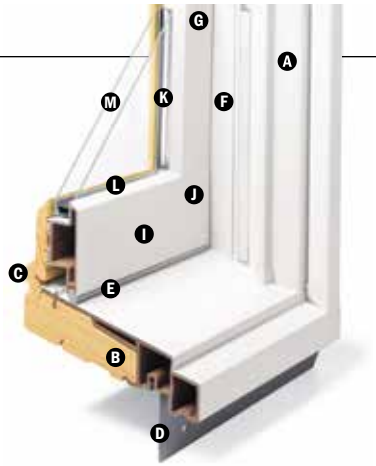

GLASS

Ⓚ Glass spacers are available in black, stainless steel and white.

Ⓛ Silicone bed glazing provides superior weathertightness and durability.

Ⓜ High-Performance glass options include:

- Low-E4® glass
- Low-E4 HeatLock® glass
- Low-E4 SmartSun™ glass
- Low-E4 SmartSun HeatLock glass
- Low-E4 Sun glass
- Low-E4 PassiveSun® HeatLock glass

Tempered and other glass options are available. Contact your Andersen supplier.

A removable translucent film helps shield the glass from damage during delivery and construction, and simplifies finishing at the job site.

Patterned Glass

Patterned glass options are available. See page 11 for more details.

HARDWARE



The standard lock and keeper design provides an easy Tilt-to-Clean feature integrated into the lock.

EXTERIORS & INTERIORS

EXTERIOR COLORS



INTERIOR OPTIONS

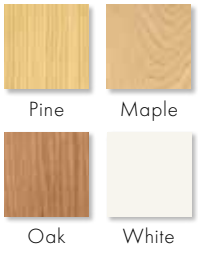

HARDWARE



Lock & Keeper

Antique Brass | Black | Bright Brass
Distressed Bronze | Distressed Nickel
Oil Rubbed Bronze | Satin Nickel
Stone | White

OPTIONAL HARDWARE Sold Separately

TRADITIONAL



Bar Lift

Available in all hardware finishes. Shown in distressed bronze.

TRADITIONAL



Hand Lift | Finger Lifts

Available in all hardware finishes. Shown in distressed nickel.

CLASSIC SERIES™



Bar Lift

Stone | White

CLASSIC SERIES



Hand Lift | Finger Lifts

Stone | **White**

CONTEMPORARY



Bar Lift

Available in all hardware finishes. Shown in bright brass.

ESTATE™



Hand Lift | Finger Lifts

Antique Brass | Bright Brass
Distressed Bronze | Distressed Nickel
Oil Rubbed Bronze | **Satin Nickel**

Bold name denotes finish shown.

HARDWARE FINISHES

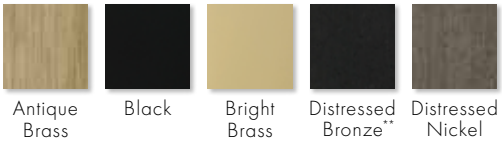

*Visit andersenwindows.com/warranty for details.

**These finishes are "living finishes" that will change with time and use, see limited warranty for details.

Naturally occurring variations in grain, color and texture of wood make each window one of a kind. All wood interiors are unfinished unless a finish is specified.

Printing limitations prevent exact replication of colors and finishes. See your Andersen supplier for actual color and finish samples.

Dimensions in parentheses are in millimeters.

SHAPES

Woodwright® double-hung windows are available in the following shapes.


Double-Hung


Springline™ Single-Hung


Arch Double-Hung


Unequal Leg Arch Double-Hung

SASH OPTIONS*


Cottage Reverse Cottage

PERFORMANCE OPTIONS

Performance Grade (PG) Upgrades

PG upgrades are available for select sizes of standard non-impact Woodwright windows, allowing these units to achieve higher performance ratings. PG ratings are more comprehensive than Design Pressure (DP) ratings for measuring product performance. For up-to-date performance information of individual products, visit **andersenwindows.com**. Use of this option will subtract 5/8" (16) from the clear opening height. Contact your Andersen supplier for availability.

ACCESSORIES Sold Separately

FRAME

Extension Jambs



The base jamb depth is 4 1/2" (114). Extension jambs are available in unfinished pine, maple and oak or prefinished white. Some sizes may be veneered.

Factory-applied and non-applied extension jambs are available in 1/16" (1.5) increments between 5 1/4" (133) and 7 1/8" (181). Extension jambs can be factory applied to either three sides (stool and apron) or four sides (picture frame casing).

Pine Stool



A clear pine stool is available and ready for finishing. The stool is available in 4 9/16" (116) for use in wall depths up to 5 1/4" (133), and in 6 9/16" (167) for use in wall depths up to 7 1/8" (181). Works with 2 1/4" (57) and 2 1/2" (64) casing widths. Shown above on a 400 Series tilt-wash double-hung window.

HARDWARE

Window Opening Control Device



A window opening control device is available, which limits sash travel to less than 4" (102) when the window is first opened. Available factory applied, or as a field-applied kit in stone or white.

STORM/INSECT SCREEN COMBINATION UNIT**



A self-storing storm window combined with an insect screen provides greater energy efficiency, while allowing ventilation when needed. Available field applied.

The combination unit is constructed with aluminum-framed single-pane upper and lower glass panels, and a charcoal powder-coated aluminum screen mesh. Available in white, Sandtone and Terratone to match product exteriors. Canvas, dark bronze, forest green and black are available by special order.

Combination units can improve Sound Transmission Class (STC) and Outdoor Indoor Transmission Class (OITC) ratings, and are ideal for projects near airports, busy roadways and other noisy environments. For example, adding a combination unit to a 400 Series tilt-wash double-hung (size 3862) unit with Low-E4® glass will improve its STC rating from 26 to 32. Contact your Andersen supplier for additional STC and OITC rating information.

INSECT SCREENS

Insect Screen Frames



Choose full insect screen or half insect screen. The half insect screen (shown above) allows ventilation without affecting the view through the upper sash. Frames are available in colors to match product exteriors.

TruScene® Insect Screens

Our TruScene insect screens let in over 25% more fresh air† and provide 50% greater clarity than conventional Andersen® insect screens, all while keeping out unwanted small insects.

Conventional Insect Screens

Conventional insect screens have charcoal gray powder-coated aluminum screen mesh.

GRILLES

Grilles are available in a variety of configurations and widths. See page 18 for details.

EXTERIOR TRIM

Available with Andersen exterior trim. See the Exterior Trim section starting on page 177.

CAUTION: Painting and staining may cause damage to rigid vinyl. Andersen does not warrant the adhesion or performance of homeowner-applied paint over vinyl or other factory-coated surfaces. For vinyl painting instructions and preparation, contact your Andersen supplier. Do not paint weatherstrip. Creosote-based stains should not come in contact with Andersen products. Abrasive cleaners or solutions containing corrosive solvents should not be used on Andersen products. See page 223 for a complete list of cautions.

*Shown on 400 Series tilt-wash double-hung windows.

**Installed combination units may reduce the overall net clear opening. The unit clear operable area may not meet egress requirements. Consult your local building code official for egress requirements in your area.

†TruScene insect screens let in over 25% more fresh air than standard Andersen fiberglass insect screens.

Dimensions in parentheses are in millimeters.

Table of Sizes for Woodwright® Double-Hung Windows

Scale 1⁄8" (3) = 1'-0" (305) – 1:96

Notes on the next page also apply to this page.

Window Dimension	1'-9 5⁄8" (549)	2'-1 5⁄8" (651)	2'-5 5⁄8" (752)	2'-7 5⁄8" (803)	2'-9 5⁄8" (854)	2'-11 5⁄8" (905)	3'-1 5⁄8" (956)	3'-5 5⁄8" (1057)	3'-9 5⁄8" (1159)
Minimum Rough Opening	1'-10 1⁄8" (562)	2'-2 1⁄8" (664)	2'-6 1⁄8" (765)	2'-8 1⁄8" (816)	2'-10 1⁄8" (867)	3'-0 1⁄8" (917)	3'-2 1⁄8" (968)	3'-6 1⁄8" (1070)	3'-10 1⁄8" (1172)
Unobstructed Glass (lower sash only)	15 5⁄8" (397)	19 5⁄8" (498)	23 5⁄8" (600)	25 5⁄8" (651)	27 5⁄8" (702)	29 5⁄8" (752)	31 5⁄8" (803)	35 5⁄8" (905)	39 5⁄8" (1006)

2:3 cottage or 3:2 reverse cottage sash (shown below) is available for all standard sizes. Size tables for windows with cottage or reverse cottage sash are available at **andersenwindows.com/sizing**.

See page 66 for custom sizing.

CUSTOM WIDTHS – 16 1⁄2" to **45 5⁄8"**

CUSTOM HEIGHTS – 32" to **76 7⁄8"**

3'-0 7⁄8" (937)	3'-0 7⁄8" (937)	13 3⁄8" (340)	**WDH**18210	**WDH**20210	**WDH**24210	**WDH**26210	**WDH**28210	**WDH**210210	**WDH**30210	**WDH**34210	**WDH**38210	Cottage	Reverse Cottage
3'-4 7⁄8" (1038)	3'-4 7⁄8" (1038)	15 3⁄8" (391)	**WDH**1832	**WDH**2032	**WDH**2432	**WDH**2632	**WDH**2832	**WDH**21032	**WDH**3032	**WDH**3432	**WDH**3832		
3'-8 7⁄8" (1140)	3'-8 7⁄8" (1140)	17 3⁄8" (441)	**WDH**1836	**WDH**2036	**WDH**2436	**WDH**2636	**WDH**2836	**WDH**21036	**WDH**3036	**WDH**3436	**WDH**3836		
4'-0 7⁄8" (1241)	4'-0 7⁄8" (1241)	19 3⁄8" (492)	**WDH**18310	**WDH**20310	**WDH**24310	**WDH**26310	**WDH**28310	**WDH**210310	**WDH**30310	**WDH**34310	**WDH**38310		
4'-4 7⁄8" (1343)	4'-4 7⁄8" (1343)	21 3⁄8" (543)	**WDH**1842	**WDH**2042	**WDH**2442	**WDH**2642	**WDH**2842	**WDH**21042	**WDH**3042	**WDH**3442	**WDH**3842		
4'-8 7⁄8" (1445)	4'-8 7⁄8" (1445)	22 3⁄4" (577)	**WDH**1846	**WDH**2046	**WDH**2446	**WDH**2646	**WDH**2846	**WDH**21046	**WDH**3046◊	**WDH**3446◊	**WDH**3846◊		
5'-0 7⁄8" (1546)	5'-0 7⁄8" (1546)	25 3⁄8" (645)	**WDH**18410	**WDH**20410	**WDH**24410	**WDH**26410	**WDH**28410	**WDH**210410◊	**WDH**30410◊	**WDH**34410◊	**WDH**38410◊		
5'-4 7⁄8" (1648)	5'-4 7⁄8" (1648)	27 3⁄8" (695)	**WDH**1852	**WDH**2052	**WDH**2452	**WDH**2652	**WDH**2852◊	**WDH**21052◊	**WDH**3052◊	**WDH**3452◊	**WDH**3852◊		
5'-8 7⁄8" (1749)	5'-8 7⁄8" (1749)	29 3⁄8" (746)	**WDH**1856	**WDH**2056	**WDH**2456	**WDH**2656◊	**WDH**2856◊	**WDH**21056◊	**WDH**3056◊	**WDH**3456◊	**WDH**3856◊		
6'-0 7⁄8" (1851)	6'-0 7⁄8" (1851)	31 3⁄8" (797)	**WDH**18510	**WDH**20510	**WDH**24510◊	**WDH**26510◊	**WDH**28510◊	**WDH**210510◊	**WDH**30510◊	**WDH**34510◊	**WDH**38510◊		
6'-4 7⁄8" (1953)	6'-4 7⁄8" (1953)	33 3⁄8" (848)	**WDH**1862	**WDH**2062	**WDH**2462◊	**WDH**2662◊	**WDH**2862◊	**WDH**21062◊	**WDH**3062◊	**WDH**3462◊	**WDH**3862◊		

Table of Sizes for Woodwright® Springline™ Single-Hung Windows

Scale 1/8" (3) = 1'-0" (305) – 1:96

Window Dimension	2'-1 5/8" (651)	2'-5 5/8" (752)	2'-7 5/8" (803)	2'-9 5/8" (854)	2'-11 5/8" (905)	3'-1 5/8" (956)	3'-5 5/8" (1057)	3'-9 5/8" (1159)
Minimum Rough Opening	2'-2 1/8" (664)	2'-6 1/8" (765)	2'-8 1/8" (816)	2'-10 1/8" (867)	3'-0 1/8" (917)	3'-2 1/8" (968)	3'-6 1/8" (1070)	3'-10 1/8" (1172)
Unobstructed Glass (lower sash only)	19 5/8" (498)	23 5/8" (600)	25 5/8" (651)	27 5/8" (702)	29 5/8" (752)	31 5/8" (803)	35 5/8" (905)	39 5/8" (1006)

CUSTOM WIDTHS – 25 5/8" to 45 5/8"

CUSTOM HEIGHTS – 52 13/16" to 76 1/2"

Unobstructed Glass (lower sash only) / Side Height

Radius and Chord Height	12 13/16" (325)	14 13/16" (376)	15 13/16" (402)	16 13/16" (427)	17 13/16" (452)	18 13/16" (478)	20 13/16" (529)	22 13/16" (579)
	12 13/16"(325)	14 13/16"(376)	15 13/16"(402)	16 13/16"(427)	17 13/16"(452)	18 13/16"(478)	20 13/16"(529)	22 13/16"(579)
21 3/8" (543) / 3'-4" (1016)	4'-4 13/16" (1341) WS2042	4'-6 13/16" (1392) WS2442	4'-7 13/16" (1418) WS2642	4'-8 13/16" (1443) WS2842	4'-9 13/16" (1468) WS21042	4'-10 13/16" (1494) WS3042	5'-0 13/16" (1545) WS3442	5'-2 13/16" (1595) WS3842
23 3/8" (594) / 3'-7" (1092)	4'-7 13/16" (1418) WS2046	4'-9 13/16" (1468) WS2446	4'-10 13/16" (1494) WS2646	4'-11 13/16" (1519) WS2846	5'-0 13/16" (1545) WS21046	5'-1 13/16" (1570) WS3046	5'-3 13/16" (1621) WS3446	5'-5 13/16" (1672) WS3846
25 3/8" (645) / 3'-10" (1168)	4'-10 13/16" (1494) WS20410	5'-0 13/16" (1545) WS24410	5'-1 13/16" (1570) WS26410	5'-2 13/16" (1595) WS28410	5'-3 13/16" (1621) WS210410	5'-4 13/16" (1646) WS30410	5'-6 13/16" (1697) WS34410	5'-8 13/16" (1748) WS38410
27 3/8" (695) / 4'-1" (1245)	5'-1 13/16" (1570) WS2052	5'-3 13/16" (1621) WS2452	5'-4 13/16" (1646) WS2652	5'-5 13/16" (1672) WS2852	5'-6 13/16" (1697) WS21052	5'-7 13/16" (1722) WS3052	5'-9 13/16" (1773) WS3452	5'-11 13/16" (1824) WS3852
29 3/8" (746) / 4'-9" (1449)	5'-9 13/16" (1774) WS2056	5'-11 13/16" (1825) WS2456	6'-0 13/16" (1850) WS2656	6'-1 13/16" (1875) WS2856	6'-2 13/16" (1901) WS21056	6'-3 13/16" (1926) WS3056	6'-5 13/16" (1977) WS3456	6'-7 13/16" (2028) WS3856
31 3/8" (797) / 5'-0 3/8" (1534)	6'-1 3/16" (1859) WS20510	6'-3 3/16" (1910) WS24510	6'-4 3/16" (1935) WS26510	6'-5 3/16" (1961) WS28510	6'-6 3/16" (1986) WS210510	6'-7 3/16" (2011) WS30510	6'-9 3/16" (2062) WS34510	6'-11 3/16" (2113) WS38510
33 3/8" (848) / 5'-3 11/16" (1618)	6'-4 1/2" (1943) WS2062	6'-6 1/2" (1994) WS2462	6'-7 1/2" (2019) WS2662	6'-8 1/2" (2045) WS2862	6'-9 1/2" (2070) WS21062	6'-10 1/2" (2096) WS3062	7'-0 1/2" (2146) WS3462	7'-2 1/2" (2197) WS3862

Custom-size windows are available in 1/8" (3) increments. See page 66 for custom sizing.

Woodwright Springline single-hung only: Minimum rough opening height is the same as the window dimension height. Upper sash does not operate and lower sash travel is limited by the radius of the upper sash. Contact your Andersen supplier for cottage and reverse cottage sash availability. **Side-by-side joining is not recommended.**

Grille patterns shown on page 67. Details shown on pages 67-68.

- Window Dimension always refers to outside frame-to-frame dimension.
- **Minimum Rough Opening dimensions may need to be increased to allow for use of building wraps, flashing, sill panning, brackets, fasteners or other items. See pages 222-223 for more details.**
- Dimensions in parentheses are in millimeters.

◊Meets or exceeds clear opening area of 5.7 sq. ft. or 0.53 m², clear opening width of 20" (508) and clear opening height of 24" (210). See tables on pages 61-63.

Table of Sizes for Woodwright® Arch Double-Hung Windows

Scale 1⁄8" (3) = 1'-0" (305) — 1:96

Notes on the next page also apply to this page.

Window Dimension	1'-9 5⁄8" (549)	2'-1 5⁄8" (651)	2'-5 5⁄8" (752)	2'-7 5⁄8" (803)	2'-9 5⁄8" (854)	2'-11 5⁄8" (905)	3'-1 5⁄8" (956)	3'-5 5⁄8" (1057)	3'-9 5⁄8" (1159)
Minimum Rough Opening	1'-10 1⁄8" (562)	2'-2 1⁄8" (664)	2'-6 1⁄8" (765)	2'-8 1⁄8" (816)	2'-10 1⁄8" (867)	3'-0 1⁄8" (917)	3'-2 1⁄8" (968)	3'-6 1⁄8" (1070)	3'-10 1⁄8" (1172)
Unobstructed Glass (lower sash only)	15 5⁄8" (397)	19 5⁄8" (498)	23 5⁄8" (600)	25 5⁄8" (651)	27 5⁄8" (702)	29 5⁄8" (752)	31 5⁄8" (803)	35 5⁄8" (905)	39 5⁄8" (1006)

CUSTOM WIDTHS — 21 5⁄8" to **45 5⁄8"**

CUSTOM HEIGHTS — 36 7⁄8" to **76 7⁄8"**

Radius: 21 5⁄8" (549) | 25 5⁄8" (651) | 29 5⁄8" (752) | 31 5⁄8" (803) | 33 5⁄8" (854) | 35 5⁄8" (905) | 37 5⁄8" (956) | 41 5⁄8" (1057) | 45 5⁄8" (1159)

Chord Height: 2 15⁄16" (75) | 3 7⁄16" (87) | 4" (102) | 4 1⁄4" (108) | 4 1⁄2" (114) | 4 13⁄16" (122) | 5 1⁄16" (129) | 5 9⁄16" (141) | 6 1⁄8" (156)

Side Height

Side Height									
2'-9 15⁄16" (862)	WA18210								
3'-0 7⁄8" (937)	WA1832	WA2032	WA2432	WA2632					
3'-4 7⁄8" (1038)	WA1836	WA2036	WA2436	WA2636	WA2836				
4'-0 7⁄8" (1241)	WA18310	WA20310	WA24310	WA26310	WA28310	WA210310	WA30310	WA34310	
4'-4 7⁄8" (1343)	WA1842	WA2042	WA2442	WA2642	WA2842	WA21042	WA3042	WA3442	WA3842
4'-8 7⁄8" (1445)	WA1846	WA2046	WA2446	WA2646	WA2846	WA21046	WA3046	WA3446	WA3846
5'-0 7⁄8" (1546)	WA18410	WA20410	WA24410	WA26410	WA28410	WA210410	WA30410	WA34410	WA38410
5'-4 7⁄8" (1648)	WA1852	WA2052	WA2452	WA2652	WA2852	WA21052	WA3052	WA3452	WA3852
5'-8 7⁄8" (1749)	WA1856	WA2056	WA2456	WA2656	WA2856	WA21056	WA3056	WA3456	WA3856
6'-0 7⁄8" (1851)	WA18510	WA20510	WA24510	WA26510	WA28510	WA210510◊	WA30510◊	WA34510◊	WA38510◊
6'-4 7⁄8" (1953)	WA1862	WA2062	WA2462	WA2662	WA2862◊	WA21062◊	WA3062◊	WA3462◊	WA3862◊

Side-by-side joining of arch double-hung windows is not recommended.

Table of Sizes for Woodwright® Unequal Leg Arch Double-Hung Windows

Scale 1/8" (3) = 1'-0" (305) – 1:96

Window Dimension	1'-9 5/8" (549)	2'-1 5/8" (651)	2'-5 5/8" (752)	2'-7 5/8" (803)	2'-9 5/8" (854)	2'-11 5/8" (905)	3'-1 5/8" (956)	3'-5 5/8" (1057)	3'-9 5/8" (1159)
Minimum Rough Opening	1'-10 1/8" (562)	2'-2 1/8" (664)	2'-6 1/8" (765)	2'-8 1/8" (816)	2'-10 1/8" (867)	3'-0 1/8" (917)	3'-2 1/8" (968)	3'-6 1/8" (1070)	3'-10 1/8" (1172)
Unobstructed Glass (lower sash only)	15 5/8" (397)	19 5/8" (498)	23 5/8" (600)	25 5/8" (651)	27 5/8" (702)	29 5/8" (752)	31 5/8" (803)	35 5/8" (905)	39 5/8" (1006)

CUSTOM WIDTHS – 21 5/8" to 45 5/8"

CUSTOM HEIGHTS – 44 7/8" to 76 7/8"

Radius: 45 5/8" (1159) | 45 5/8" (1159) | 45 5/8" (1159) | 45 5/8" (1159) | 45 5/8" (1159) | 96" (2438) | 96" (2438) | 96" (2438) | 96" (2438)

Chord Height: 5 7/16" (138) | 7 7/8" (200) | 10 15/16" (279) | 12 3/4" (324) | 14 13/16" (376) | 6 13/16" (173) | 7 11/16" (195) | 9 1/2" (241) | 11 9/16" (294)

Side Height

3'-8 7/8" (1140) | 3'-8 7/8" (1140) | 17 3/8" (441)
3'-3 7/16" (1002) — WU1836

4'-0 7/8" (1241) | 4'-0 7/8" (1241) | 19 3/8" (492)
3'-7 7/16" (1103) — WU18310
3'-5" (1041) — WU20310

4'-4 7/8" (1343) | 4'-4 7/8" (1343) | 21 3/8" (543)
3'-11 7/16" (1205) — WU1842
3'-9" (1143) — WU2042

4'-8 7/8" (1445) | 4'-8 7/8" (1445) | 23 3/8" (594)
4'-3 7/16" (1307) — WU1846
4'-1" (1245) — WU2046
3'-9 15/16" (1167) — WU2446

5'-0 7/8" (1546) | 5'-0 7/8" (1546) | 25 3/8" (645)
4'-7 7/16" (1408) — WU18410
4'-5" (1346) — WU20410
4'-1 15/16" (1268) — WU24410
4'-0 1/8" (1222) — WU26410

5'-4 7/8" (1648) | 5'-4 7/8" (1648) | 27 3/8" (695)
4'-11 7/16" (1510) — WU1852
4'-9" (1448) — WU2052
4'-5 15/16" (1370) — WU2452
4'-4 1/8" (1324) — WU2652
4'-2 1/16" (1272) — WU2852

5'-8 7/8" (1749) | 5'-8 7/8" (1749) | 29 3/8" (746)
5'-3 7/16" (1611) — WU1856
5'-1" (1549) — WU2056
4'-9 15/16" (1472) — WU2456
4'-8 1/8" (1426) — WU2656
4'-6 1/16" (1373) — WU2856

6'-0 7/8" (1851) | 6'-0 7/8" (1851) | 31 3/8" (797)
5'-7 7/16" (1713) — WU18510
5'-5" (1651) — WU20510
5'-1 15/16" (1573) — WU24510
5'-0 1/8" (1527) — WU26510
4'-10 1/16" (1475) — WU28510

6'-4 7/8" (1953) | 6'-4 7/8" (1953) | 33 3/8" (848)
5'-11 7/16" (1815) — WU1862
5'-9" (1753) — WU2062
5'-5 15/16" (1675) — WU2462
5'-4 1/8" (1629) — WU2662
5'-2 1/16" (1576) — WU2862

Custom-size windows are available in 1/8" (3) increments. See page 66 for custom sizing.

Lower sash travel is limited by the radius of the upper sash. Contact your Andersen supplier for cottage and reverse cottage sash availability.

Choose left facing or right facing as viewed from the exterior.

3'-10 1/16" (1170) — WU21042
3'-9 3/16" (1148) — WU3042
4'-2 1/16" (1272) — WU21046
4'-1 3/16" (1249) — WU3046
4'-6 1/16" (1373) — WU210410
4'-5 3/16" (1351) — WU30410
4'-3 3/8" (1305) — WU34410
4'-10 1/16" (1475) — WU21052
4'-9 3/16" (1453) — WU3052
4'-7 3/8" (1407) — WU3452
4'-5 5/16" (1354) — WU3852
5'-6 1/16" (1678) — WU210510
5'-5 3/16" (1656) — WU30510
5'-3 3/8" (1610) — WU34510
5'-1 5/16" (1557) — WU38510
6'-2 1/16" (1879) — WU210610
6'-1 3/16" (1856) — WU30610
5'-11 3/8" (1810) — WU34610
5'-9 5/16" (1757) — WU38610
5'-10 1/16" (1779) — WU21062◊
5'-9 3/16" (1757) — WU3062◊
5'-7 3/8" (1711) — WU3462
5'-5 5/16" (1659) — WU3862

Arch double-hung with flanking unequal leg arch double-hungs.

Joining long sides creates a smooth arc. **Joining short sides is not recommended.**

- Window Dimension always refers to outside frame-to-frame dimension.
- **Minimum Rough Opening dimensions may need to be increased to allow for use of building wraps, flashing, sill panning, brackets, fasteners or other items. See pages 222-223 for more details.**
- Dimensions in parentheses are in millimeters.

◊Meets or exceeds clear opening area of 5.7 sq. ft. or 0.53 m², clear opening width of 20" (508) and clear opening height of 24" (210). See tables on pages 63-65.

Table of Sizes for Woodwright® Transom Windows

Notes on the next page also apply to this page.

Scale 1/8" (3) = 1'-0" (305) – 1:96

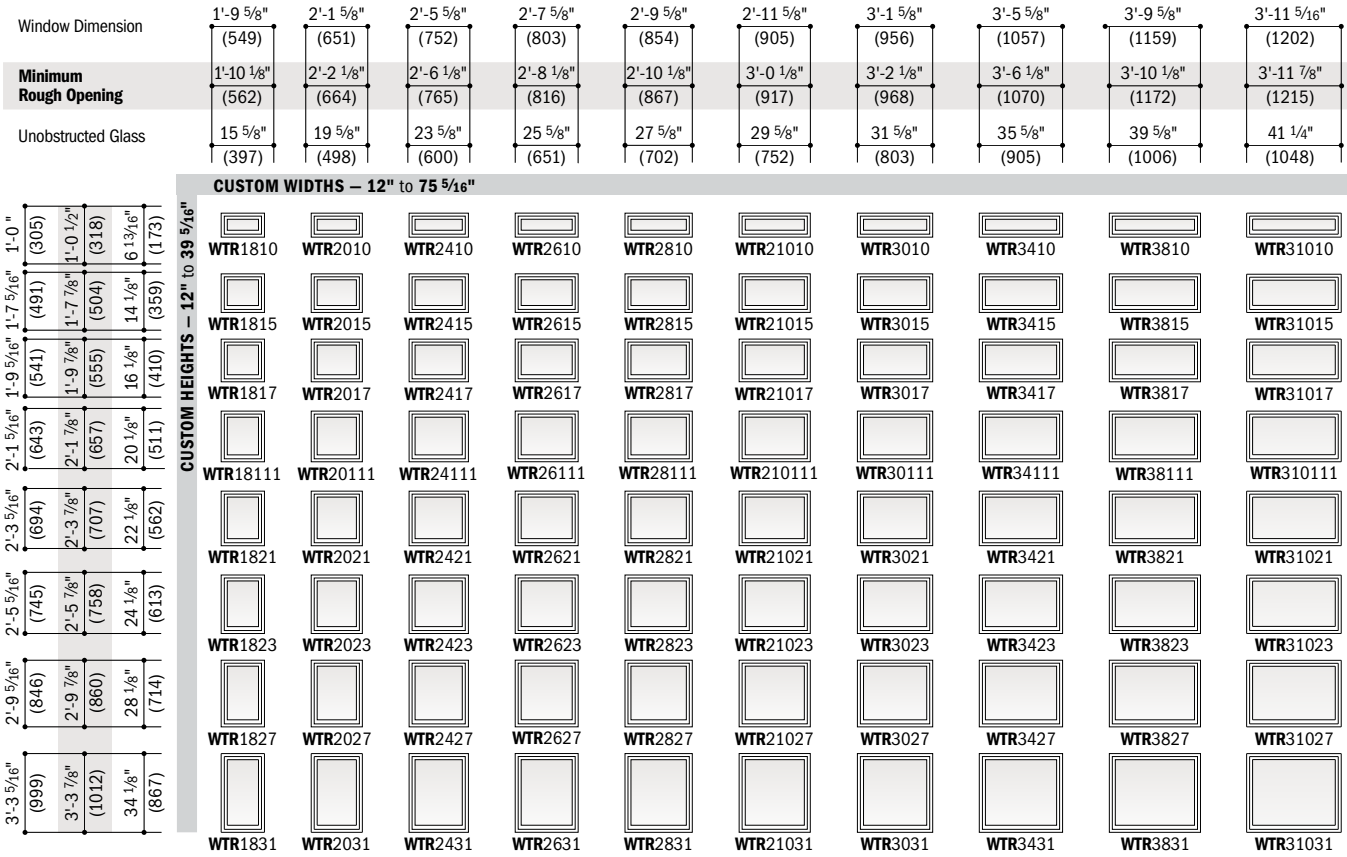

- Window Dimension always refers to outside frame-to-frame dimension.
- **Minimum Rough Opening dimensions may need to be increased to allow for use of building wraps, flashing, sill panning, brackets, fasteners or other items. See pages 222-223 for more details.**
- Dimensions in parentheses are in millimeters.

Area Specifications for Woodwright® Transom Windows

Window Number	Glass Area Sq. Ft./(m²)		Overall Window Area Sq. Ft./(m²)	
WTR1810	0.74	(0.07)	1.80	(0.17)
WTR1815	1.53	(0.14)	2.90	(0.27)
WTR1817	1.75	(0.16)	3.20	(0.30)
WTR18111	2.18	(0.20)	3.80	(0.35)
WTR1821	2.40	(0.22)	4.10	(0.38)
WTR1823	2.62	(0.24)	4.40	(0.41)
WTR1827	3.05	(0.28)	5.00	(0.46)
WTR1831	3.70	(0.34)	5.90	(0.55)
WTR2010	0.93	(0.09)	2.14	(0.20)
WTR2015	1.93	(0.18)	3.44	(0.32)
WTR2017	2.20	(0.20)	3.79	(0.35)
WTR20111	2.74	(0.25)	4.50	(0.42)
WTR2021	3.02	(0.28)	4.86	(0.45)
WTR2023	3.29	(0.31)	5.22	(0.48)
WTR2027	3.83	(0.36)	5.93	(0.55)
WTR2031	4.65	(0.43)	7.00	(0.65)
WTR2410	1.12	(0.10)	2.47	(0.23)
WTR2415	2.32	(0.22)	3.97	(0.37)
WTR2417	2.65	(0.25)	4.38	(0.41)
WTR24111	3.30	(0.31)	5.21	(0.48)

Window Number	Glass Area Sq. Ft./(m²)		Overall Window Area Sq. Ft./(m²)	
WTR2421	3.63	(0.34)	5.62	(0.52)
WTR2423	3.96	(0.37)	6.03	(0.56)
WTR2427	4.61	(0.43)	6.85	(0.64)
WTR2431	5.60	(0.52)	8.09	(0.75)
WTR2610	1.21	(0.11)	2.64	(0.24)
WTR2615	2.51	(0.23)	4.24	(0.39)
WTR2617	2.87	(0.27)	4.68	(0.43)
WTR26111	3.58	(0.33)	5.56	(0.52)
WTR2621	3.94	(0.37)	6.00	(0.56)
WTR2623	4.29	(0.40)	6.44	(0.60)
WTR2627	5.00	(0.46)	7.32	(0.68)
WTR2631	6.07	(0.56)	8.63	(0.80)
WTR2810	1.31	(0.12)	2.80	(0.26)
WTR2815	2.71	(0.25)	4.51	(0.42)
WTR2817	3.09	(0.29)	4.98	(0.46)
WTR28111	3.86	(0.36)	5.91	(0.55)
WTR2821	4.24	(0.39)	6.38	(0.59)
WTR2823	4.63	(0.43)	6.84	(0.64)
WTR2827	5.40	(0.50)	7.78	(0.72)
WTR2831	6.55	(0.61)	9.18	(0.85)

Window Number	Glass Area Sq. Ft./(m²)		Overall Window Area Sq. Ft./(m²)	
WTR21010	1.40	(0.13)	2.97	(0.28)
WTR21015	2.91	(0.27)	4.78	(0.44)
WTR21017	3.32	(0.31)	5.27	(0.49)
WTR210111	4.14	(0.38)	6.26	(0.58)
WTR21021	4.55	(0.42)	6.76	(0.63)
WTR21023	4.96	(0.46)	7.25	(0.67)
WTR21027	5.79	(0.54)	8.24	(0.77)
WTR21031	7.02	(0.65)	9.73	(0.90)
WTR3010	1.50	(0.14)	3.14	(0.29)
WTR3015	3.10	(0.29)	5.05	(0.47)
WTR3017	3.54	(0.33)	5.57	(0.52)
WTR30111	4.42	(0.41)	6.61	(0.61)
WTR3021	4.86	(0.45)	7.14	(0.66)
WTR3023	5.30	(0.49)	7.66	(0.71)
WTR3027	6.18	(0.57)	8.70	(0.81)
WTR3031	7.49	(0.70)	10.27	(0.95)
WTR3410	1.69	(0.16)	3.47	(0.32)
WTR3415	3.49	(0.32)	5.58	(0.52)

- Dimensions in parentheses are in square meters.

continued on next page

4'-3 5/16" (1303)	4'-11 5/16" (1506)	5'-7 5/16" (1710)	6'-3 5/16" (1913)
4'-3 7/8" (1317)	4'-11 7/8" (1520)	5'-7 7/8" (1724)	6'-3 7/8" (1927)
45 1/4" (1149)	53 1/4" (1353)	61 1/4" (1556)	69 1/4" (1745)

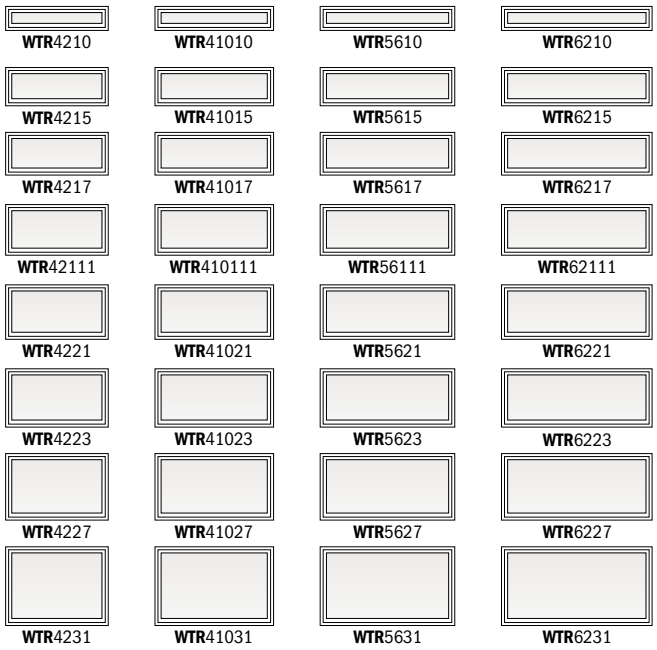

• Window Dimension always refers to outside frame-to-frame dimension.
• **Minimum Rough Opening dimensions may need to be increased to allow for use of building wraps, flashing, sill panning, brackets, fasteners or other items. See pages 222-223 for more details.**
• Dimensions in parentheses are in millimeters.

Custom-size windows are available in 1/8" (3) increments. See page 66 for custom sizing.

Grille patterns shown on page 67.

Details shown on pages 67-68.

Area Specifications for Woodwright® Transom Windows *(continued)*

Window Number	Glass Area Sq. Ft./(m²)		Overall Window Area Sq. Ft./(m²)	
WTR3417	3.99	(0.37)	6.16	(0.57)
WTR34111	4.98	(0.46)	7.32	(0.68)
WTR3421	5.47	(0.51)	7.90	(0.73)
WTR3423	5.97	(0.55)	8.47	(0.79)
WTR3427	6.96	(0.65)	9.63	(0.89)
WTR3431	8.44	(0.78)	11.36	(1.06)
WTR3810	1.87	(0.17)	3.80	(0.35)
WTR3815	3.89	(0.36)	6.12	(0.57)
WTR3817	4.44	(0.41)	6.75	(0.63)
WTR38111	5.54	(0.51)	8.02	(0.75)
WTR3821	6.09	(0.57)	8.65	(0.80)
WTR3823	6.64	(0.62)	9.29	(0.86)
WTR3827	7.74	(0.72)	10.55	(0.98)
WTR3831	9.39	(0.87)	12.46	(1.16)
WTR31010	1.95	(0.18)	3.94	(0.37)
WTR31015	4.05	(0.38)	6.35	(0.59)
WTR31017	4.63	(0.43)	7.00	(0.65)
WTR310111	5.77	(0.54)	8.32	(0.77)
WTR31021	6.35	(0.59)	8.97	(0.83)
WTR31023	6.92	(0.64)	9.63	(0.89)

Window Number	Glass Area Sq. Ft./(m²)		Overall Window Area Sq. Ft./(m²)	
WTR31027	8.07	(0.75)	10.95	(1.02)
WTR31031	9.79	(0.91)	12.92	(1.20)
WTR4210	2.14	(0.20)	4.28	(0.40)
WTR4215	4.44	(0.41)	6.88	(0.64)
WTR4217	5.07	(0.47)	7.59	(0.71)
WTR42111	6.33	(0.59)	9.02	(0.84)
WTR4221	6.96	(0.65)	9.73	(0.90)
WTR4223	7.59	(0.71)	10.45	(0.97)
WTR4227	8.85	(0.82)	11.87	(1.10)
WTR4231	10.74	(1.00)	14.01	(1.30)
WTR41010	2.52	(0.23)	4.94	(0.46)
WTR41015	5.23	(0.49)	7.95	(0.74)
WTR41017	5.97	(0.55)	8.78	(0.82)
WTR410111	7.45	(0.69)	10.43	(0.97)
WTR41021	8.19	(0.76)	11.25	(1.05)
WTR41023	8.93	(0.83)	12.07	(1.12)
WTR41027	10.41	(0.97)	13.72	(1.27)
WTR41031	12.63	(1.17)	16.19	(1.50)
WTR5610	2.90	(0.27)	5.61	(0.52)
WTR5615	6.01	(0.56)	9.03	(0.84)

Window Number	Glass Area Sq. Ft./(m²)		Overall Window Area Sq. Ft./(m²)	
WTR5617	6.87	(0.64)	9.96	(0.93)
WTR56111	8.57	(0.80)	11.83	(1.10)
WTR5621	9.42	(0.88)	12.77	(1.19)
WTR5623	10.27	(0.95)	13.70	(1.27)
WTR5627	11.98	(1.11)	15.57	(1.45)
WTR5631	14.53	(1.35)	18.38	(1.71)
WTR6210	3.28	(0.30)	6.28	(0.58)
WTR6215	6.80	(0.63)	10.10	(0.94)
WTR6217	7.76	(0.72)	11.15	(1.04)
WTR62111	9.69	(0.90)	13.24	(1.23)
WTR6221	10.65	(0.99)	14.28	(1.33)
WTR6223	11.61	(1.08)	15.33	(1.42)
WTR6227	13.54	(1.26)	17.42	(1.62)
WTR6231	16.43	(1.53)	20.56	(1.91)

• Dimensions in parentheses are in square meters.

Table of Sizes for Woodwright® Picture Windows

Scale 1/8" (3) = 1'-0" (305) – 1:96

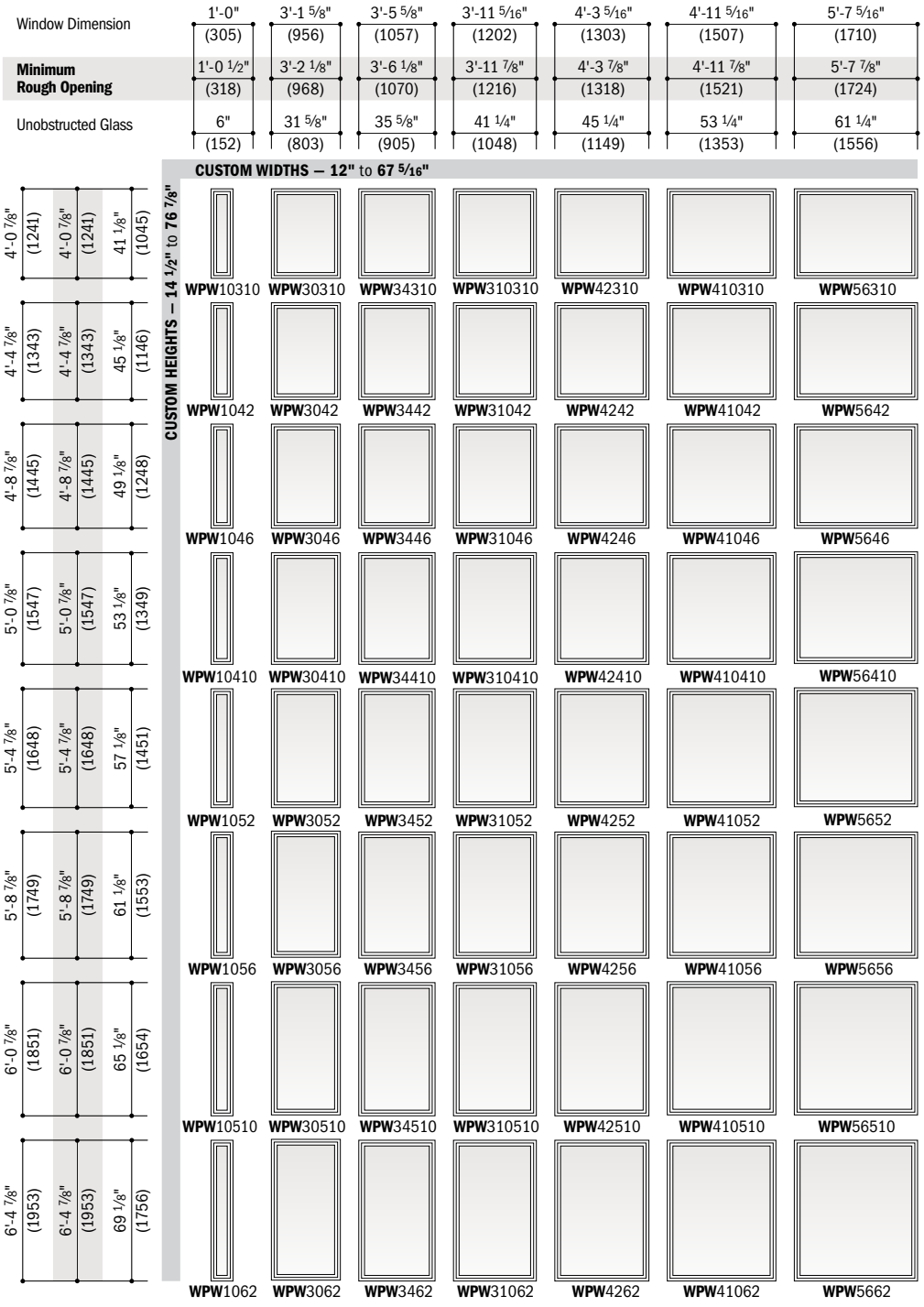

Custom-size windows are available in 1/8" (3) increments. See page 66 for custom sizing.

Grille patterns shown on page 67.

Details shown on pages 67-68.

- Window Dimension always refers to outside frame-to-frame dimension.
- **Minimum Rough Opening dimensions may need to be increased to allow for use of building wraps, flashing, sill panning, brackets, fasteners or other items. See pages 222-223 for more details.**
- Dimensions in parentheses are in millimeters.

Opening and Area Specifications for Woodwright® Double-Hung Windows

Window Number	Clear Opening Area Sq. Ft./(m²)	Clear Opening in Full Open Position Width Inches/(mm)	Clear Opening in Full Open Position Height Inches/(mm)	Glass Area Sq. Ft./(m²)	Vent Area Sq. Ft./(m²)	Top of Subfloor to Top of Inside Sill Stop Inches/(mm)	Overall Window Area Sq. Ft./(m²)
WDH18210	1.73 (0.16)	17 7/8" (454)	14 1/4" (362)	2.90 (0.27)	1.78 (0.17)	48 1/2" (1231)	5.53 (0.51)
WDH1832	1.98 (0.18)	17 7/8" (454)	16 1/4" (412)	3.32 (0.31)	2.03 (0.19)	44 1/2" (1130)	6.14 (0.57)
WDH1836	2.23 (0.21)	17 7/8" (454)	18 1/4" (463)	3.74 (0.35)	2.28 (0.21)	40 1/2" (1028)	6.74 (0.63)
WDH18310	2.48 (0.23)	17 7/8" (454)	20 1/4" (514)	4.15 (0.39)	2.53 (0.24)	36 1/2" (926)	7.34 (0.68)
WDH1842	2.73 (0.25)	17 7/8" (454)	22 1/4" (565)	4.57 (0.43)	2.78 (0.26)	32 1/2" (825)	7.94 (0.74)
WDH1846	2.90 (0.27)	17 7/8" (454)	24 1/4" (616)	4.98 (0.46)	3.02 (0.28)	28 1/2" (723)	8.54 (0.79)
WDH18410	3.22 (0.30)	17 7/8" (454)	26 1/4" (666)	5.40 (0.50)	3.27 (0.30)	24 1/2" (622)	9.14 (0.85)
WDH1852	3.47 (0.32)	17 7/8" (454)	28 1/4" (717)	5.81 (0.54)	3.52 (0.33)	20 1/2" (520)	9.74 (0.91)
WDH1856	3.72 (0.35)	17 7/8" (454)	30 1/4" (768)	6.23 (0.58)	3.02 (0.28)	16 1/2" (418)	10.34 (0.96)
WDH18510	3.97 (0.37)	17 7/8" (454)	32 1/4" (819)	6.65 (0.62)	4.02 (0.37)	12 1/2" (317)	10.94 (1.02)
WDH1862	4.22 (0.39)	17 7/8" (454)	34 1/4" (870)	7.06 (0.66)	4.26 (0.40)	8 1/2" (215)	11.54 (1.07)
WDH20210	2.12 (0.20)	21 7/8" (556)	14 1/4" (362)	3.68 (0.34)	2.18 (0.20)	48 1/2" (1231)	6.56 (0.61)
WDH2032	2.42 (0.23)	21 7/8" (556)	16 1/4" (412)	4.21 (0.39)	2.48 (0.23)	44 1/2" (1130)	7.27 (0.68)
WDH2036	2.73 (0.25)	21 7/8" (556)	18 1/4" (463)	4.73 (0.44)	2.79 (0.26)	40 1/2" (1028)	7.98 (0.74)
WDH20310	3.03 (0.28)	21 7/8" (556)	20 1/4" (514)	5.26 (0.49)	3.09 (0.29)	36 1/2" (926)	8.69 (0.81)
WDH2042	3.34 (0.31)	21 7/8" (556)	22 1/4" (565)	5.79 (0.54)	3.40 (0.32)	32 1/2" (825)	9.41 (0.87)
WDH2046	3.55 (0.33)	21 7/8" (556)	24 1/4" (616)	6.31 (0.59)	3.70 (0.34)	28 1/2" (723)	10.12 (0.94)
WDH20410	3.94 (0.37)	21 7/8" (556)	26 1/4" (666)	6.84 (0.64)	4.00 (0.37)	24 1/2" (622)	10.83 (1.01)
WDH2052	4.25 (0.39)	21 7/8" (556)	28 1/4" (717)	7.37 (0.69)	4.31 (0.40)	20 1/2" (520)	11.54 (1.07)
WDH2056	4.55 (0.42)	21 7/8" (556)	30 1/4" (768)	7.89 (0.73)	3.70 (0.34)	16 1/2" (418)	12.25 (1.14)
WDH20510	4.86 (0.45)	21 7/8" (556)	32 1/4" (819)	8.42 (0.78)	4.92 (0.46)	12 1/2" (317)	12.96 (1.20)
WDH2062	5.16 (0.48)	21 7/8" (556)	34 1/4" (870)	8.95 (0.83)	5.22 (0.49)	8 1/2" (215)	13.68 (1.27)
WDH24210	2.51 (0.23)	25 7/8" (657)	14 1/4" (362)	4.46 (0.41)	2.58 (0.24)	48 1/2" (1231)	7.58 (0.70)
WDH2432	2.86 (0.27)	25 7/8" (657)	16 1/4" (412)	5.09 (0.47)	2.94 (0.27)	44 1/2" (1130)	8.40 (0.78)
WDH2436	3.22 (0.30)	25 7/8" (657)	18 1/4" (463)	5.73 (0.53)	3.30 (0.31)	40 1/2" (1028)	9.23 (0.86)
WDH24310	3.59 (0.33)	25 7/8" (657)	20 1/4" (514)	6.37 (0.59)	3.66 (0.34)	36 1/2" (926)	10.05 (0.93)
WDH2442	3.95 (0.37)	25 7/8" (657)	22 1/4" (565)	7.01 (0.65)	4.02 (0.37)	32 1/2" (825)	10.87 (1.01)
WDH2446	4.19 (0.39)	25 7/8" (657)	24 1/4" (616)	7.65 (0.71)	4.38 (0.41)	28 1/2" (724)	11.70 (1.09)
WDH24410	4.66 (0.43)	25 7/8" (657)	26 1/4" (666)	8.28 (0.77)	4.74 (0.44)	24 1/2" (622)	12.52 (1.16)
WDH2452	5.02 (0.47)	25 7/8" (657)	28 1/4" (717)	8.92 (0.83)	5.10 (0.47)	20 1/2" (520)	13.34 (1.24)
WDH2456	5.38 (0.50)	25 7/8" (657)	30 1/4" (768)	9.56 (0.89)	4.38 (0.41)	16 1/2" (418)	14.17 (1.32)
WDH24510◊	5.74 (0.53)	25 7/8" (657)	32 1/4" (819)	10.20 (0.95)	5.81 (0.54)	12 1/2" (317)	14.99 (1.39)
WDH2462◊	6.10 (0.57)	25 7/8" (657)	34 1/4" (870)	10.84 (1.01)	6.17 (0.57)	8 1/2" (215)	15.81 (1.47)
WDH26210	2.71 (0.25)	27 7/8" (708)	14 1/4" (362)	4.84 (0.45)	2.78 (0.26)	48 1/2" (1231)	8.09 (0.75)
WDH2632	3.09 (0.29)	27 7/8" (708)	16 1/4" (412)	5.54 (0.52)	3.17 (0.30)	44 1/2" (1130)	8.97 (0.83)
WDH2636	3.48 (0.32)	27 7/8" (708)	18 1/4" (463)	6.23 (0.58)	3.55 (0.33)	40 1/2" (1028)	9.85 (0.92)
WDH26310	3.86 (0.36)	27 7/8" (708)	20 1/4" (514)	6.92 (0.64)	3.94 (0.37)	36 1/2" (926)	10.73 (1.00)
WDH2642	4.25 (0.40)	27 7/8" (708)	22 1/4" (565)	7.62 (0.71)	4.33 (0.40)	32 1/2" (825)	11.61 (1.08)
WDH2646	4.52 (0.42)	27 7/8" (708)	24 1/4" (616)	8.31 (0.77)	4.71 (0.44)	28 1/2" (723)	12.49 (1.16)
WDH26410	5.02 (0.47)	27 7/8" (708)	26 1/4" (666)	9.01 (0.84)	5.10 (0.47)	24 1/2" (622)	13.36 (1.24)
WDH2652	5.41 (0.50)	27 7/8" (708)	28 1/4" (717)	9.70 (0.90)	5.49 (0.51)	20 1/2" (520)	14.24 (1.32)
WDH2656◊	5.80 (0.54)	27 7/8" (708)	30 1/4" (768)	10.39 (0.96)	4.71 (0.44)	16 1/2" (418)	15.12 (1.41)
WDH26510◊	6.19 (0.57)	27 7/8" (708)	32 1/4" (819)	11.09 (1.03)	6.26 (0.58)	12 1/2" (317)	16.00 (1.49)
WDH2662◊	6.58 (0.61)	27 7/8" (708)	34 1/4" (870)	11.78 (1.09)	6.65 (0.62)	8 1/2" (215)	16.88 (1.57)
WDH28210	2.90 (0.27)	29 7/8" (759)	14 1/4" (362)	5.23 (0.49)	2.98 (0.28)	48 1/2" (1231)	8.61 (0.80)
WDH2832	3.31 (0.31)	29 7/8" (759)	16 1/4" (412)	5.98 (0.56)	3.39 (0.32)	44 1/2" (1130)	9.54 (0.89)
WDH2836	3.73 (0.35)	29 7/8" (759)	18 1/4" (463)	6.73 (0.63)	3.81 (0.35)	40 1/2" (1028)	10.47 (0.97)
WDH28310	4.14 (0.38)	29 7/8" (759)	20 1/4" (514)	7.48 (0.70)	4.22 (0.39)	36 1/2" (926)	11.41 (1.06)
WDH2842	4.56 (0.42)	29 7/8" (759)	22 1/4" (565)	8.23 (0.77)	4.64 (0.43)	32 1/2" (825)	12.34 (1.15)
WDH2846	4.85 (0.45)	29 7/8" (759)	24 1/4" (616)	8.98 (0.83)	5.05 (0.47)	28 1/2" (723)	13.28 (1.23)
WDH28410	5.38 (0.50)	29 7/8" (759)	26 1/4" (666)	9.73 (0.90)	5.47 (0.51)	24 1/2" (622)	14.21 (1.32)
WDH2852◊	5.80 (0.54)	29 7/8" (759)	28 1/4" (717)	10.48 (0.97)	5.88 (0.55)	20 1/2" (520)	15.14 (1.41)
WDH2856◊	6.22 (0.58)	29 7/8" (759)	30 1/4" (768)	11.22 (1.04)	5.05 (0.47)	16 1/2" (418)	16.08 (1.49)
WDH28510◊	6.63 (0.62)	29 7/8" (759)	32 1/4" (819)	11.97 (1.11)	6.71 (0.62)	12 1/2" (317)	17.01 (1.58)
WDH2862◊	7.05 (0.66)	29 7/8" (759)	34 1/4" (870)	12.72 (1.18)	7.13 (0.66)	8 1/2" (215)	17.95 (1.67)
WDH210210	3.09 (0.29)	31 7/8" (809)	14 1/4" (362)	5.62 (0.52)	3.18 (0.30)	48 1/2" (1231)	9.12 (0.85)
WDH21032	3.53 (0.33)	31 7/8" (809)	16 1/4" (412)	6.42 (0.60)	3.62 (0.34)	44 1/2" (1130)	10.11 (0.94)
WDH21036	3.97 (0.37)	31 7/8" (809)	18 1/4" (463)	7.23 (0.67)	4.06 (0.38)	40 1/2" (1028)	11.10 (1.03)
WDH210310	4.42 (0.41)	31 7/8" (809)	20 1/4" (514)	8.03 (0.75)	4.51 (0.42)	36 1/2" (926)	12.09 (1.12)
WDH21042	4.86 (0.45)	31 7/8" (809)	22 1/4" (565)	8.84 (0.82)	4.95 (0.46)	32 1/2" (825)	13.08 (1.22)
WDH21046	5.17 (0.48)	31 7/8" (809)	24 1/4" (616)	9.64 (0.90)	5.39 (0.50)	28 1/2" (723)	14.07 (1.31)
WDH210410◊	5.74 (0.53)	31 7/8" (809)	26 1/4" (666)	10.45 (0.97)	5.83 (0.54)	24 1/2" (622)	15.05 (1.40)

continued on next page

For cottage and reverse cottage sash area and opening specifications, visit **andersenwindows.com/openingspecs**.

- Top of Subfloor to Top of Inside Sill Stop is calculated based upon a structural header height of 6'-10 1/2" (2096).
- Dimensions in parentheses are in millimeters or square meters.

◊Meets or exceeds clear opening area of 5.7 sq. ft. or 0.53 m², clear opening width of 20" (508) and clear opening height of 24" (610).

Opening and Area Specifications for Woodwright® Double-Hung Windows *(continued)*

Window Number	Clear Opening Area Sq. Ft./(m²)	Clear Opening in Full Open Position: Width Inches/(mm)	Clear Opening in Full Open Position: Height Inches/(mm)	Glass Area Sq. Ft./(m²)	Vent Area Sq. Ft./(m²)	Top of Subfloor to Top of Inside Sill Stop Inches/(mm)	Overall Window Area Sq. Ft./(m²)
WDH21052 ◊	6.18 (0.57)	31 7/8" (809)	28 1/4" (717)	11.25 (1.05)	6.28 (0.58)	20 1/2" (520)	16.04 (1.49)
WDH21056 ◊	6.63 (0.62)	31 7/8" (809)	30 1/4" (768)	12.06 (1.12)	5.39 (0.50)	16 1/2" (418)	17.03 (1.59)
WDH210510 ◊	7.07 (0.66)	31 7/8" (809)	34 1/4" (819)	12.86 (1.20)	7.16 (0.67)	12 1/2" (317)	18.02 (1.67)
WDH21062 ◊	7.52 (0.70)	31 7/8" (809)	34 1/4" (870)	13.67 (1.27)	7.60 (0.71)	8 1/2" (215)	19.01 (1.77)
WDH30210	3.29 (0.31)	33 7/8" (860)	14 1/4" (362)	6.01 (0.56)	3.38 (0.31)	48 1/2" (1231)	9.63 (0.90)
WDH3032	3.75 (0.35)	33 7/8" (860)	16 1/4" (412)	6.87 (0.64)	3.85 (0.36)	44 1/2" (1130)	10.67 (0.99)
WDH3036	4.22 (0.39)	33 7/8" (860)	18 1/4" (463)	7.73 (0.72)	4.32 (0.40)	40 1/2" (1028)	11.72 (1.09)
WDH30310	4.69 (0.44)	33 7/8" (860)	20 1/4" (514)	8.59 (0.80)	4.79 (0.45)	36 1/2" (926)	12.76 (1.19)
WDH3042	5.17 (0.48)	33 7/8" (860)	22 1/4" (565)	9.45 (0.88)	5.26 (0.49)	32 1/2" (825)	13.81 (1.28)
WDH3046 ◊	5.75 (0.53)	33 7/8" (860)	24 1/4" (616)	10.31 (0.96)	5.73 (0.53)	28 1/2" (723)	14.85 (1.38)
WDH30410 ◊	6.10 (0.57)	33 7/8" (860)	26 1/4" (666)	11.17 (1.04)	6.20 (0.58)	24 1/2" (622)	15.90 (1.48)
WDH3052 ◊	6.57 (0.61)	33 7/8" (860)	28 1/4" (717)	12.03 (1.12)	6.67 (0.62)	20 1/2" (520)	16.95 (1.58)
WDH3056 ◊	7.04 (0.65)	33 7/8" (860)	30 1/4" (768)	12.89 (1.20)	5.73 (0.53)	16 1/2" (418)	17.99 (1.67)
WDH30510 ◊	7.52 (0.70)	33 7/8" (860)	32 1/4" (819)	13.75 (1.28)	7.61 (0.71)	12 1/2" (317)	19.04 (1.77)
WDH3062 ◊	7.99 (0.74)	33 7/8" (860)	34 1/4" (870)	14.61 (1.36)	8.08 (0.75)	8 1/2" (215)	20.08 (1.87)
WDH34210	3.68 (0.34)	37 7/8" (962)	14 1/4" (362)	6.79 (0.63)	3.78 (0.35)	48 1/2" (1231)	10.65 (0.99)
WDH3432	4.19 (0.39)	37 7/8" (962)	16 1/4" (412)	7.76 (0.72)	4.30 (0.40)	44 1/2" (1130)	11.81 (1.10)
WDH3436	4.72 (0.44)	37 7/8" (962)	18 1/4" (463)	8.73 (0.81)	4.83 (0.45)	40 1/2" (1028)	12.97 (1.21)
WDH34310	5.25 (0.49)	37 7/8" (962)	20 1/4" (514)	9.70 (0.90)	5.35 (0.50)	36 1/2" (926)	14.12 (1.31)
WDH3442	5.78 (0.54)	37 7/8" (962)	22 1/4" (565)	10.67 (0.99)	5.88 (0.55)	32 1/2" (825)	15.28 (1.42)
WDH3446 ◊	6.14 (0.57)	37 7/8" (962)	24 1/4" (616)	11.64 (1.08)	6.41 (0.60)	28 1/2" (723)	16.43 (1.53)
WDH34410 ◊	6.82 (0.63)	37 7/8" (962)	26 1/4" (666)	12.61 (1.17)	6.93 (0.64)	24 1/2" (622)	17.59 (1.63)
WDH3452 ◊	7.35 (0.68)	37 7/8" (962)	28 1/4" (717)	13.58 (1.26)	7.46 (0.69)	20 1/2" (520)	18.75 (1.74)
WDH3456 ◊	7.88 (0.73)	37 7/8" (962)	30 1/4" (768)	14.55 (1.35)	6.41 (0.60)	16 1/2" (418)	19.90 (1.85)
WDH34510 ◊	8.41 (0.78)	37 7/8" (962)	32 1/4" (819)	15.53 (1.44)	8.51 (0.79)	12 1/2" (317)	21.06 (1.96)
WDH3462 ◊	8.94 (0.83)	37 7/8" (962)	34 1/4" (870)	16.50 (1.53)	9.04 (0.84)	8 1/2" (215)	22.22 (2.06)
WDH38210	4.07 (0.38)	41 7/8" (1064)	14 1/4" (362)	7.56 (0.70)	4.17 (0.39)	48 1/2" (1231)	11.68 (1.09)
WDH3832	4.64 (0.43)	41 7/8" (1064)	16 1/4" (412)	8.64 (0.80)	4.76 (0.44)	44 1/2" (1130)	12.94 (1.20)
WDH3836	5.22 (0.49)	41 7/8" (1064)	18 1/4" (463)	9.72 (0.90)	5.34 (0.50)	40 1/2" (1028)	14.21 (1.32)
WDH38310	5.81 (0.54)	41 7/8" (1064)	20 1/4" (514)	10.81 (1.00)	5.92 (0.55)	36 1/2" (926)	15.48 (1.44)
WDH3842	6.39 (0.59)	41 7/8" (1064)	22 1/4" (565)	11.89 (1.11)	6.50 (0.60)	32 1/2" (825)	16.75 (1.56)
WDH3846 ◊	6.79 (0.63)	41 7/8" (1064)	24 1/4" (616)	12.97 (1.21)	7.08 (0.66)	28 1/2" (723)	18.01 (1.67)
WDH38410 ◊	7.55 (0.70)	41 7/8" (1064)	26 1/4" (666)	14.05 (1.31)	7.66 (0.71)	24 1/2" (622)	19.28 (1.79)
WDH3852 ◊	8.13 (0.76)	41 7/8" (1064)	28 1/4" (717)	15.14 (1.41)	8.25 (0.77)	20 1/2" (520)	20.55 (1.91)
WDH3856 ◊	8.72 (0.81)	41 7/8" (1064)	30 1/4" (768)	16.22 (1.51)	7.08 (0.66)	16 1/2" (418)	21.62 (2.01)
WDH38510 ◊	9.30 (0.86)	41 7/8" (1064)	32 1/4" (819)	17.30 (1.61)	9.41 (0.87)	12 1/2" (317)	23.08 (2.14)
WDH3862 ◊	9.88 (0.92)	41 7/8" (1064)	34 1/4" (870)	18.38 (1.71)	9.99 (0.93)	8 1/2" (215)	24.35 (2.26)

Opening and Area Specifications for Woodwright® Springline™ Single-Hung Windows

Window Number	Clear Opening Area Sq. Ft./(m²)	Clear Opening in Full Open Position: Width Inches/(mm)	Clear Opening in Full Open Position: Height Inches/(mm)	Glass Area Sq. Ft./(m²)	Vent Area Sq. Ft./(m²)	Top of Subfloor to Top of Inside Sill Stop Inches/(mm)	Overall Window Area Sq. Ft./(m²)
WS2042	1.39 (0.13)	21 7/8" (556)	9 2/16" (231)	5.48 (0.51)	1.39 (0.13)	32 9/16" (828)	8.90 (0.83)
WS2046	1.54 (0.14)	21 7/8" (556)	10 2/16" (257)	5.88 (0.55)	1.54 (0.14)	29 9/16" (751)	9.44 (0.88)
WS20410	1.69 (0.16)	21 7/8" (556)	11 2/16" (282)	6.29 (0.59)	1.69 (0.16)	26 9/16" (675)	9.97 (0.93)
WS2052	1.84 (0.17)	21 7/8" (556)	12 2/16" (308)	6.70 (0.62)	1.84 (0.17)	23 9/16" (599)	10.51 (0.98)
WS2056	2.76 (0.26)	21 7/8" (556)	18 2/16" (461)	7.80 (0.72)	2.76 (0.26)	15 9/16" (395)	11.94 (1.11)
WS20510	2.96 (0.28)	21 7/8" (556)	19 1/2" (495)	8.25 (0.77)	2.96 (0.28)	12 9/16" (310)	12.53 (1.16)
WS2062	3.16 (0.29)	21 7/8" (556)	20 13/16" (529)	8.71 (0.81)	3.16 (0.29)	8 7/8" (226)	13.12 (1.22)
WS2442	1.64 (0.15)	25 7/8" (658)	9 2/16" (231)	6.85 (0.64)	1.64 (0.15)	30 9/16" (777)	10.62 (0.99)
WS2446	1.82 (0.17)	25 7/8" (658)	10 2/16" (257)	7.34 (0.68)	1.82 (0.17)	27 9/16" (701)	11.23 (1.04)
WS24410	2.00 (0.19)	25 7/8" (658)	11 2/16" (282)	7.83 (0.73)	2.00 (0.19)	24 9/16" (624)	11.85 (1.10)
WS2452	2.18 (0.20)	25 7/8" (658)	12 2/16" (308)	8.33 (0.77)	2.18 (0.20)	21 9/16" (548)	12.47 (1.16)
WS2456	3.26 (0.30)	25 7/8" (658)	18 2/16" (461)	9.65 (0.90)	3.26 (0.30)	13 9/16" (344)	14.12 (1.31)
WS24510	3.50 (0.33)	25 7/8" (658)	19 1/2" (495)	10.19 (0.95)	3.50 (0.33)	10 3/16" (259)	14.81 (1.38)
WS2462	3.74 (0.35)	25 7/8" (658)	20 13/16" (529)	10.74 (1.00)	3.74 (0.35)	6 7/8" (175)	15.49 (1.44)
WS2642	1.76 (0.16)	27 7/8" (708)	9 1/8" (231)	7.57 (0.70)	1.76 (0.16)	29 9/16" (751)	11.51 (1.07)
WS2646	1.96 (0.18)	27 7/8" (708)	10 1/8" (257)	8.10 (0.75)	1.96 (0.18)	26 9/16" (675)	12.17 (1.13)
WS26410	2.15 (0.20)	27 7/8" (708)	11 1/8" (282)	8.64 (0.80)	2.15 (0.20)	23 9/16" (599)	12.82 (1.19)
WS2652	2.35 (0.22)	27 7/8" (708)	12 1/8" (308)	9.17 (0.85)	2.35 (0.22)	20 9/16" (523)	13.48 (1.25)
WS2656	3.52 (0.33)	27 7/8" (708)	18 1/8" (461)	10.60 (0.99)	3.52 (0.33)	12 9/16" (319)	15.25 (1.42)
WS26510	3.77 (0.35)	27 7/8" (708)	19 1/2" (495)	11.19 (1.04)	3.77 (0.35)	9 3/16" (234)	15.98 (1.49)

continued on next page

For cottage and reverse cottage sash area and opening specifications, visit **andersenwindows.com/openingspecs**.

- Top of Subfloor to Top of Inside Sill Stop is calculated based upon a structural header height of 6'-10 1/2" (2096).
- Dimensions in parentheses are in millimeters or square meters.

◊Meets or exceeds clear opening area of 5.7 sq. ft. or 0.53 m², clear opening width of 20" (508) and clear opening height of 24" (610).

Opening and Area Specifications for Woodwright® Springline™ Single-Hung Windows *(continued)*

Window Number	Clear Opening Area Sq. Ft./(m²)	Clear Opening in Full Open Position Width Inches/(mm)	Clear Opening in Full Open Position Height Inches/(mm)	Glass Area Sq. Ft./(m²)	Vent Area Sq. Ft./(m²)	Top of Subfloor to Top of Inside Sill Stop Inches/(mm)	Overall Window Area Sq. Ft./(m²)
WS2662	4.03 (0.38)	27 7/8" (708)	20 13/16" (529)	11.79 (1.10)	4.03 (0.38)	* *	16.71 (1.55)
WS2842	1.89 (0.18)	29 7/8" (759)	9 1/8" (231)	8.31 (0.77)	1.89 (0.18)	28 9/16" (726)	12.42 (1.15)
WS2846	2.10 (0.20)	29 7/8" (759)	10 1/8" (257)	8.89 (0.83)	2.10 (0.20)	25 9/16" (650)	13.12 (1.22)
WS28410	2.31 (0.21)	29 7/8" (759)	11 1/8" (282)	9.46 (0.88)	2.31 (0.21)	22 9/16" (574)	13.82 (1.28)
WS2852	2.51 (0.23)	29 7/8" (759)	12 1/8" (308)	10.04 (0.93)	2.51 (0.23)	19 9/16" (497)	14.52 (1.35)
WS2856	3.77 (0.35)	29 7/8" (759)	18 1/8" (461)	11.58 (1.08)	3.77 (0.35)	11 9/16" (293)	16.40 (1.52)
WS28510	4.04 (0.38)	29 7/8" (759)	19 1/2" (495)	12.22 (1.14)	4.04 (0.38)	8 3/16" (209)	17.18 (1.60)
WS2862	4.32 (0.40)	29 7/8" (759)	20 13/16" (529)	12.86 (1.20)	4.32 (0.40)	* *	17.95 (1.67)
WS21042	2.02 (0.19)	31 7/8" (810)	9 1/8" (231)	9.07 (0.84)	2.02 (0.19)	27 9/16" (701)	13.35 (1.24)
WS21046	2.24 (0.21)	31 7/8" (810)	10 1/8" (257)	9.69 (0.90)	2.24 (0.21)	24 9/16" (624)	14.09 (1.31)
WS210410	2.46 (0.23)	31 7/8" (810)	11 1/8" (282)	10.31 (0.96)	2.46 (0.23)	21 9/16" (548)	14.84 (1.38)
WS21052	2.68 (0.25)	31 7/8" (810)	12 1/8" (308)	10.93 (1.02)	2.68 (0.25)	18 9/16" (472)	15.58 (1.45)
WS21056	4.02 (0.37)	31 7/8" (810)	18 1/8" (461)	12.58 (1.17)	4.02 (0.37)	10 9/16" (268)	17.57 (1.63)
WS210510	4.32 (0.40)	31 7/8" (810)	19 1/2" (495)	13.27 (1.23)	4.32 (0.40)	7 3/16" (183)	18.39 (1.71)
WS21062	4.61 (0.43)	31 7/8" (810)	20 13/16" (529)	13.95 (1.30)	4.61 (0.43)	* *	19.22 (1.79)
WS3042	2.14 (0.20)	33 7/8" (861)	9 1/8" (231)	9.86 (0.92)	2.14 (0.20)	26 9/16" (675)	14.31 (1.33)
WS3046	2.38 (0.22)	33 7/8" (861)	10 1/8" (257)	10.52 (0.98)	2.38 (0.22)	23 9/16" (599)	15.09 (1.40)
WS30410	2.62 (0.24)	33 7/8" (861)	11 1/8" (282)	11.18 (1.04)	2.62 (0.24)	20 9/16" (523)	15.87 (1.48)
WS3052	2.85 (0.27)	33 7/8" (861)	12 1/8" (308)	11.84 (1.10)	2.85 (0.27)	17 9/16" (447)	16.66 (1.55)
WS3056	4.27 (0.40)	33 7/8" (861)	18 1/8" (461)	13.60 (1.26)	4.27 (0.40)	9 9/16" (242)	18.76 (1.74)
WS30510	4.59 (0.43)	33 7/8" (861)	19 1/2" (495)	14.33 (1.33)	4.59 (0.43)	6 3/16" (158)	19.63 (1.82)
WS3062	4.90 (0.46)	33 7/8" (861)	20 13/16" (529)	15.07 (1.40)	4.90 (0.46)	* *	20.50 (1.90)
WS3442	2.40 (0.22)	37 7/8" (962)	9 1/8" (231)	11.50 (1.07)	2.40 (0.22)	24 9/16" (624)	16.28 (1.51)
WS3446	2.66 (0.25)	37 7/8" (962)	10 1/8" (257)	12.24 (1.14)	2.66 (0.25)	21 9/16" (548)	17.15 (1.59)
WS34410	2.92 (0.27)	37 7/8" (962)	11 1/8" (282)	12.98 (1.21)	2.92 (0.27)	18 9/16" (472)	18.02 (1.67)
WS3452	3.19 (0.30)	37 7/8" (962)	12 1/8" (308)	13.72 (1.28)	3.19 (0.30)	15 9/16" (396)	18.88 (1.75)
WS3456	4.78 (0.44)	37 7/8" (962)	18 1/8" (461)	15.71 (1.46)	4.78 (0.44)	7 9/16" (192)	21.21 (1.97)
WS34510	5.13 (0.48)	37 7/8" (962)	19 1/2" (495)	16.54 (1.54)	5.13 (0.48)	* *	22.17 (2.06)
WS3462	5.48 (0.51)	37 7/8" (962)	20 13/16" (529)	17.36 (1.61)	5.48 (0.51)	* *	23.13 (2.15)
WS3842	2.65 (0.25)	41 7/8" (1064)	9 1/8" (231)	13.22 (1.23)	2.65 (0.25)	22 9/16" (574)	18.34 (1.70)
WS3846	2.94 (0.27)	41 7/8" (1064)	10 1/8" (257)	14.04 (1.31)	2.94 (0.27)	19 9/16" (497)	19.29 (1.79)
WS38410	3.23 (0.30)	41 7/8" (1064)	11 1/8" (282)	14.87 (1.38)	3.23 (0.30)	16 9/16" (421)	20.24 (1.88)
WS3852	3.52 (0.33)	41 7/8" (1064)	12 1/8" (308)	15.69 (1.46)	3.52 (0.33)	13 9/16" (345)	21.19 (1.97)
WS3856	5.28 (0.49)	41 7/8" (1064)	18 1/8" (461)	17.91 (1.66)	5.28 (0.49)	* *	23.74 (2.21)
WS38510	5.67 (0.53)	41 7/8" (1064)	19 1/2" (495)	18.82 (1.75)	5.67 (0.53)	* *	24.80 (2.30)
WS3862	6.06 (0.56)	41 7/8" (1064)	20 13/16" (529)	19.74 (1.83)	6.06 (0.56)	* *	25.85 (2.40)

- Top of Subfloor to Top of Inside Sill Stop is calculated based upon a structural header height of 6'-10 1/2" (2096).
- Dimensions in parentheses are in millimeters or square meters.
- *Dimension varies depending upon header height.

Opening and Area Specifications for Woodwright® Arch Double-Hung Windows

Window Number	Clear Opening Area Sq. Ft./(m²)	Clear Opening in Full Open Position Width Inches/(mm)	Clear Opening in Full Open Position Height Inches/(mm)	Glass Area Sq. Ft./(m²)	Vent Area Sq. Ft./(m²)	Top of Subfloor to Top of Inside Sill Stop Inches/(mm)	Overall Window Area Sq. Ft./(m²)
WA18210	1.26 (0.12)	17 7/8" (454)	10 3/16" (259)	2.84 (0.26)	1.61 (0.15)	48 1/2" (1232)	5.39 (0.50)
WA1832	1.51 (0.14)	17 7/8" (454)	12 3/16" (309)	3.27 (0.30)	1.85 (0.17)	44 1/2" (1131)	5.99 (0.56)
WA1836	1.76 (0.16)	17 7/8" (454)	14 3/16" (360)	3.71 (0.34)	2.10 (0.20)	40 1/2" (1029)	6.59 (0.61)
WA18310	2.01 (0.19)	17 7/8" (454)	16 3/16" (411)	4.14 (0.39)	2.35 (0.22)	36 1/2" (928)	7.20 (0.67)
WA1842	2.26 (0.21)	17 7/8" (454)	18 3/16" (462)	4.58 (0.43)	2.60 (0.24)	32 1/2" (826)	7.80 (0.72)
WA1846	2.51 (0.23)	17 7/8" (454)	20 3/16" (513)	5.01 (0.47)	2.85 (0.27)	28 1/2" (724)	8.40 (0.78)
WA18410	2.76 (0.26)	17 7/8" (454)	22 3/16" (563)	5.44 (0.51)	3.10 (0.29)	24 1/2" (623)	9.00 (0.84)
WA1852	3.00 (0.28)	17 7/8" (454)	24 3/16" (614)	5.88 (0.55)	3.35 (0.31)	20 1/2" (521)	9.60 (0.89)
WA1856	3.25 (0.30)	17 7/8" (454)	26 3/16" (665)	6.31 (0.59)	3.59 (0.33)	16 1/2" (420)	10.20 (0.95)
WA18510	3.50 (0.33)	17 7/8" (454)	28 3/16" (716)	6.75 (0.63)	3.84 (0.36)	12 1/2" (318)	10.80 (1.00)
WA1862	3.75 (0.35)	17 7/8" (454)	30 3/16" (767)	7.18 (0.67)	4.09 (0.38)	8 1/2" (216)	11.40 (1.06)
WA2032	1.77 (0.16)	21 7/8" (556)	11 5/8" (296)	4.09 (0.38)	2.24 (0.21)	44 1/2" (1131)	7.07 (0.66)
WA2036	2.07 (0.19)	21 7/8" (556)	13 5/8" (347)	4.63 (0.43)	2.55 (0.24)	40 1/2" (1029)	7.78 (0.72)
WA20310	2.38 (0.22)	21 7/8" (556)	15 5/8" (397)	5.18 (0.48)	2.85 (0.27)	36 1/2" (928)	8.50 (0.79)
WA2042	2.68 (0.25)	21 7/8" (556)	17 5/8" (448)	5.72 (0.53)	3.15 (0.29)	32 1/2" (826)	9.21 (0.86)
WA2046	2.99 (0.28)	21 7/8" (556)	19 5/8" (499)	6.27 (0.58)	3.46 (0.32)	28 1/2" (724)	9.92 (0.92)
WA20410	3.29 (0.31)	21 7/8" (556)	21 5/8" (550)	6.81 (0.63)	3.76 (0.35)	24 1/2" (623)	10.63 (0.99)
WA2052	3.59 (0.33)	21 7/8" (556)	23 5/8" (601)	7.36 (0.68)	4.07 (0.38)	20 1/2" (521)	11.34 (1.05)
WA2056	3.90 (0.36)	21 7/8" (556)	25 5/8" (651)	7.90 (0.73)	4.37 (0.41)	16 1/2" (420)	12.05 (1.12)

continued on next page

Area Specifications for Woodwright® Picture Windows

Window Number	Glass Area Sq. Ft./(m²)	Overall Window Area Sq. Ft./(m²)
WPW10310	2.03 (0.19)	4.07 (0.38)
WPW1042	2.22 (0.21)	4.41 (0.41)
WPW1046	2.42 (0.23)	4.74 (0.44)
WPW10410	2.61 (0.24)	5.07 (0.47)
WPW1052	2.81 (0.26)	5.41 (0.50)
WPW1056	3.01 (0.28)	5.74 (0.53)
WPW10510	3.20 (0.30)	6.07 (0.56)
WPW1062	3.40 (0.32)	6.41 (0.60)
WPW30310	9.38 (0.87)	12.77 (1.19)
WPW3042	10.29 (0.96)	13.82 (1.28)
WPW3046	11.19 (1.04)	14.86 (1.38)
WPW30410	12.10 (1.12)	15.91 (1.48)
WPW3052	13.01 (1.21)	16.95 (1.58)
WPW3056	13.92 (1.29)	18.00 (1.67)
WPW30510	14.83 (1.38)	19.04 (1.77)
WPW3062	15.73 (1.46)	20.09 (1.87)
WPW34310	10.53 (0.98)	14.13 (1.31)
WPW3442	11.54 (1.07)	15.28 (1.42)
WPW3446	12.56 (1.17)	16.44 (1.53)
WPW34410	13.58 (1.26)	17.60 (1.64)
WPW3452	14.60 (1.36)	18.75 (1.74)
WPW3456	15.62 (1.45)	19.91 (1.85)
WPW34510	16.64 (1.55)	21.07 (1.96)
WPW3462	17.66 (1.64)	22.22 (2.06)
WPW310310	12.16 (1.13)	16.06 (1.49)
WPW31042	13.33 (1.24)	17.37 (1.61)
WPW31046	14.51 (1.35)	18.69 (1.74)
WPW310410	15.69 (1.46)	20.00 (1.86)
WPW31052	16.87 (1.57)	21.32 (1.98)
WPW31056	18.04 (1.68)	22.63 (2.10)
WPW310510	19.22 (1.79)	23.94 (2.22)
WPW31062	20.40 (1.90)	25.26 (2.35)
WPW42310	13.30 (1.24)	17.42 (1.62)
WPW4242	14.20 (1.32)	18.84 (1.75)
WPW4246	15.88 (1.48)	20.27 (1.88)
WPW42410	17.17 (1.60)	21.69 (2.02)
WPW4252	18.46 (1.72)	23.12 (2.15)
WPW4256	19.75 (1.84)	24.54 (2.28)
WPW42510	21.03 (1.95)	25.97 (2.41)
WPW4262	22.32 (2.07)	27.39 (2.55)
WPW410310	15.60 (1.45)	20.13 (1.87)
WPW41042	17.11 (1.59)	21.78 (2.02)
WPW41046	18.62 (1.73)	23.43 (2.18)
WPW410410	20.13 (1.87)	25.07 (2.33)
WPW41052	21.64 (2.01)	26.72 (2.48)
WPW41056	23.15 (2.15)	28.37 (2.64)
WPW410510	24.66 (2.29)	30.02 (2.79)
WPW41062	26.17 (2.43)	31.66 (2.94)
WPW56310	17.89 (1.66)	22.85 (2.12)
WPW5642	19.63 (1.82)	24.72 (2.30)
WPW5646	21.36 (1.98)	26.59 (2.47)
WPW56410	23.09 (2.15)	28.46 (2.64)
WPW5652	24.83 (2.31)	30.33 (2.82)
WPW5656	26.56 (2.47)	32.20 (2.99)
WPW56510	28.29 (2.63)	34.07 (3.17)
WPW5662	30.02 (2.79)	35.93 (3.34)

- Dimensions in parentheses are in square meters.

- Top of Subfloor to Top of Inside Sill Stop is calculated based upon a structural header height of 6'-10 1/2" (2096).
- Dimensions in parentheses are in millimeters or square meters.

Opening and Area Specifications for Woodwright® Arch Double-Hung Windows *(continued)*

Window Number	Clear Opening Area Sq. Ft./(m²)	Clear Opening in Full Open Position		Glass Area Sq. Ft./(m²)	Vent Area Sq. Ft./(m²)	Top of Subfloor to Top of Inside Sill Stop Inches/(mm)	Overall Window Area Sq. Ft./(m²)
		Width Inches/(mm)	Height Inches/(mm)				
WA20510	4.20 (0.39)	21 7/8" (556)	27 5/8" (702)	8.45 (0.79)	4.68 (0.43)	12 1/2" (318)	12.77 (1.19)
WA2062	4.51 (0.42)	21 7/8" (556)	29 5/8" (753)	8.99 (0.84)	4.98 (0.46)	8 1/2" (216)	13.48 (1.25)
WA2432	2.00 (0.19)	25 7/8" (658)	11 1/8" (282)	4.89 (0.46)	2.62 (0.24)	44 1/2" (1131)	8.14 (0.76)
WA2436	2.36 (0.22)	25 7/8" (658)	13 1/8" (333)	5.55 (0.52)	2.98 (0.28)	40 1/2" (1029)	8.96 (0.83)
WA24310	2.72 (0.25)	25 7/8" (658)	15 1/8" (384)	6.21 (0.58)	3.34 (0.31)	36 1/2" (928)	9.79 (0.91)
WA2442	3.08 (0.29)	25 7/8" (658)	17 1/8" (435)	6.86 (0.64)	3.70 (0.34)	32 1/2" (826)	10.61 (0.99)
WA2446	3.44 (0.32)	25 7/8" (658)	19 1/8" (485)	7.52 (0.70)	4.06 (0.38)	28 1/2" (724)	11.43 (1.06)
WA24410	3.80 (0.35)	25 7/8" (658)	21 1/8" (536)	8.17 (0.76)	4.42 (0.41)	24 1/2" (623)	12.26 (1.14)
WA2452	4.16 (0.39)	25 7/8" (658)	23 1/8" (587)	8.83 (0.82)	4.78 (0.44)	20 1/2" (521)	13.08 (1.22)
WA2456	4.51 (0.42)	25 7/8" (658)	25 1/8" (638)	9.49 (0.88)	5.14 (0.48)	16 1/2" (420)	13.90 (1.29)
WA24510	4.87 (0.45)	25 7/8" (658)	27 1/8" (689)	10.14 (0.94)	5.50 (0.51)	12 1/2" (318)	14.72 (1.37)
WA2462	5.23 (0.49)	25 7/8" (658)	29 1/8" (739)	10.80 (1.00)	5.86 (0.54)	8 1/2" (216)	15.55 (1.44)
WA2632	2.10 (0.20)	27 7/8" (708)	10 13/16" (275)	5.29 (0.49)	2.81 (0.26)	44 1/2" (1131)	8.67 (0.81)
WA2636	2.49 (0.23)	27 7/8" (708)	12 13/16" (326)	6.00 (0.56)	3.19 (0.30)	40 1/2" (1029)	9.55 (0.89)
WA26310	2.88 (0.27)	27 7/8" (708)	14 13/16" (377)	6.72 (0.62)	3.58 (0.33)	36 1/2" (928)	10.43 (0.97)
WA2642	3.26 (0.30)	27 7/8" (708)	16 13/16" (428)	7.43 (0.69)	3.97 (0.37)	32 1/2" (826)	11.31 (1.05)
WA2646	3.65 (0.34)	27 7/8" (708)	18 13/16" (479)	8.14 (0.76)	4.36 (0.41)	28 1/2" (724)	12.18 (1.13)
WA26410	4.04 (0.38)	27 7/8" (708)	20 13/16" (529)	8.85 (0.82)	4.74 (0.44)	24 1/2" (623)	13.06 (1.21)
WA2652	4.42 (0.41)	27 7/8" (708)	22 13/16" (580)	9.56 (0.89)	5.13 (0.48)	20 1/2" (521)	13.94 (1.30)
WA2656	4.81 (0.45)	27 7/8" (708)	24 13/16" (631)	10.28 (0.96)	5.52 (0.51)	16 1/2" (420)	14.82 (1.38)
WA26510	5.20 (0.48)	27 7/8" (708)	26 13/16" (682)	10.99 (1.02)	5.91 (0.55)	12 1/2" (318)	15.70 (1.46)
WA2662	5.59 (0.52)	27 7/8" (708)	28 13/16" (733)	11.70 (1.09)	6.29 (0.59)	8 1/2" (216)	16.58 (1.54)
WA2836	2.61 (0.24)	29 7/8" (759)	12 9/16" (319)	6.46 (0.60)	3.41 (0.32)	40 1/2" (1029)	10.13 (0.94)
WA28310	3.03 (0.28)	29 7/8" (759)	14 9/16" (370)	7.22 (0.67)	3.82 (0.36)	36 1/2" (928)	11.07 (1.03)
WA2842	3.44 (0.32)	29 7/8" (759)	16 9/16" (421)	7.99 (0.74)	4.24 (0.39)	32 1/2" (826)	12.00 (1.12)
WA2846	3.86 (0.36)	29 7/8" (759)	18 9/16" (472)	8.76 (0.81)	4.65 (0.43)	28 1/2" (724)	12.94 (1.20)
WA28410	4.27 (0.40)	29 7/8" (759)	20 9/16" (523)	9.53 (0.89)	5.07 (0.47)	24 1/2" (623)	13.87 (1.29)
WA2852	4.69 (0.44)	29 7/8" (759)	22 9/16" (573)	10.29 (0.96)	5.48 (0.51)	20 1/2" (521)	14.80 (1.38)
WA2856	5.10 (0.47)	29 7/8" (759)	24 9/16" (624)	11.06 (1.03)	5.90 (0.55)	16 1/2" (420)	15.74 (1.46)
WA28510	5.52 (0.51)	29 7/8" (759)	26 9/16" (675)	11.83 (1.10)	6.31 (0.59)	12 1/2" (318)	16.67 (1.55)
WA2862 ◊	5.93 (0.55)	29 7/8" (759)	28 9/16" (726)	12.60 (1.17)	6.73 (0.63)	8 1/2" (216)	17.61 (1.64)
WA210310	3.17 (0.29)	31 7/8" (810)	14 5/16" (363)	7.73 (0.72)	4.06 (0.38)	36 1/2" (928)	11.70 (1.09)
WA21042	3.61 (0.34)	31 7/8" (810)	16 5/16" (414)	8.55 (0.80)	4.50 (0.42)	32 1/2" (826)	12.69 (1.18)
WA21046	4.05 (0.38)	31 7/8" (810)	18 5/16" (465)	9.38 (0.87)	4.94 (0.46)	28 1/2" (724)	13.68 (1.27)
WA210410	4.50 (0.42)	31 7/8" (810)	20 5/16" (516)	10.20 (0.95)	5.39 (0.50)	24 1/2" (623)	14.67 (1.36)
WA21052	4.94 (0.46)	31 7/8" (810)	22 5/16" (567)	11.02 (1.02)	5.83 (0.54)	20 1/2" (521)	15.66 (1.46)
WA21056	5.38 (0.50)	31 7/8" (810)	24 5/16" (617)	11.84 (1.10)	6.27 (0.58)	16 1/2" (420)	16.65 (1.55)
WA210510 ◊	5.83 (0.54)	31 7/8" (810)	26 5/16" (668)	12.67 (1.18)	6.72 (0.62)	12 1/2" (318)	17.64 (1.64)
WA21062 ◊	6.27 (0.58)	31 7/8" (810)	28 5/16" (719)	13.49 (1.25)	7.16 (0.67)	8 1/2" (216)	18.63 (1.73)
WA30310	3.30 (0.31)	33 7/8" (861)	14 1/16" (357)	8.23 (0.77)	4.29 (0.40)	36 1/2" (928)	12.34 (1.15)
WA3042	3.78 (0.35)	33 7/8" (861)	16 1/16" (407)	9.11 (0.85)	4.76 (0.44)	32 1/2" (826)	13.38 (1.24)
WA3046	4.25 (0.39)	33 7/8" (861)	18 1/16" (458)	9.99 (0.93)	5.23 (0.49)	28 1/2" (724)	14.43 (1.34)
WA30410	4.72 (0.44)	33 7/8" (861)	20 1/16" (509)	10.87 (1.01)	5.70 (0.53)	24 1/2" (623)	15.47 (1.44)
WA3052	5.19 (0.48)	33 7/8" (861)	22 1/16" (560)	11.75 (1.09)	6.17 (0.57)	20 1/2" (521)	16.52 (1.54)
WA3056	5.66 (0.53)	33 7/8" (861)	24 1/16" (611)	12.62 (1.17)	6.65 (0.62)	16 1/2" (420)	17.56 (1.63)
WA30510 ◊	6.13 (0.57)	33 7/8" (861)	26 1/16" (661)	13.50 (1.25)	7.12 (0.66)	12 1/2" (318)	18.61 (1.73)
WA3062 ◊	6.60 (0.61)	33 7/8" (861)	28 1/16" (712)	14.38 (1.34)	7.59 (0.71)	8 1/2" (216)	19.65 (1.83)
WA34310	3.55 (0.33)	37 7/8" (962)	13 1/2" (343)	9.23 (0.86)	4.75 (0.44)	36 1/2" (928)	13.60 (1.26)
WA3442	4.08 (0.38)	37 7/8" (962)	15 1/2" (394)	10.22 (0.95)	5.28 (0.49)	32 1/2" (826)	14.76 (1.37)
WA3446	4.61 (0.43)	37 7/8" (962)	17 1/2" (445)	11.21 (1.04)	5.81 (0.54)	28 1/2" (724)	15.91 (1.48)
WA34410	5.13 (0.48)	37 7/8" (962)	19 1/2" (495)	12.20 (1.13)	6.33 (0.59)	24 1/2" (623)	17.07 (1.59)
WA3452	5.66 (0.53)	37 7/8" (962)	21 1/2" (546)	13.19 (1.23)	6.86 (0.64)	20 1/2" (521)	18.22 (1.69)
WA3456	6.19 (0.58)	37 7/8" (962)	23 1/2" (597)	14.18 (1.32)	7.38 (0.69)	16 1/2" (420)	19.38 (1.80)
WA34510 ◊	6.71 (0.62)	37 7/8" (962)	25 1/2" (648)	15.17 (1.41)	7.91 (0.74)	12 1/2" (318)	20.54 (1.91)
WA3462 ◊	7.24 (0.67)	37 7/8" (962)	27 1/2" (699)	16.16 (1.50)	8.44 (0.78)	8 1/2" (216)	21.69 (2.02)
WA3842	4.36 (0.41)	41 7/8" (1064)	15" (380)	11.32 (1.05)	5.79 (0.54)	32 1/2" (826)	16.12 (1.50)
WA3846	4.94 (0.46)	41 7/8" (1064)	17" (431)	12.42 (1.15)	6.37 (0.59)	28 1/2" (724)	17.39 (1.62)
WA38410	5.52 (0.51)	41 7/8" (1064)	19" (482)	13.52 (1.26)	6.95 (0.65)	24 1/2" (623)	18.65 (1.73)
WA3852	6.10 (0.57)	41 7/8" (1064)	21" (533)	14.62 (1.36)	7.53 (0.70)	20 1/2" (521)	19.92 (1.85)
WA3856	6.68 (0.62)	41 7/8" (1064)	23" (583)	15.72 (1.46)	8.11 (0.75)	16 1/2" (420)	21.19 (1.97)
WA38510 ◊	7.26 (0.68)	41 7/8" (1064)	25" (634)	16.82 (1.56)	8.70 (0.81)	12 1/2" (318)	22.46 (2.09)
WA3862 ◊	7.85 (0.73)	41 7/8" (1064)	27" (685)	17.93 (1.67)	9.28 (0.86)	8 1/2" (216)	23.72 (2.20)

• Top of Subfloor to Top of Inside Sill Stop is calculated based upon a structural header height of 6'-10 1/2" (2096).
• Dimensions in parentheses are in millimeters or square meters.
◊Meets or exceeds clear opening area of 5.7 sq. ft. or 0.53 m², clear opening width of 20" (508) and clear opening height of 24" (610).

Opening and Area Specifications for Woodwright® Unequal Leg Arch Double-Hung Windows

Window Number	Clear Opening Area Sq. Ft./(m²)	Clear Opening in Full Open Position Width Inches/(mm)	Clear Opening in Full Open Position Height Inches/(mm)	Glass Area Sq. Ft./(m²)	Vent Area Sq. Ft./(m²)	Top of Subfloor to Top of Inside Sill Stop Inches/(mm)	Overall Window Area Sq. Ft./(m²)
WU1836	1.44 (0.13)	17 7/8" (454)	11 5/8" (295)	3.59 (0.33)	1.98 (0.18)	40 1/2" (1029)	6.47 (0.60)
WU18310	1.69 (0.16)	17 7/8" (454)	13 5/8" (346)	4.02 (0.37)	2.23 (0.21)	36 1/2" (928)	7.07 (0.66)
WU1842	1.94 (0.18)	17 7/8" (454)	15 5/8" (396)	4.46 (0.41)	2.48 (0.23)	32 1/2" (826)	7.67 (0.71)
WU1846	2.19 (0.20)	17 7/8" (454)	17 5/8" (447)	4.89 (0.45)	2.72 (0.25)	28 1/2" (724)	8.27 (0.77)
WU18410	2.44 (0.23)	17 7/8" (454)	19 5/8" (498)	5.32 (0.49)	2.97 (0.28)	24 1/2" (623)	8.87 (0.82)
WU1852	2.68 (0.25)	17 7/8" (454)	21 5/8" (549)	5.76 (0.53)	3.22 (0.30)	20 1/2" (521)	9.47 (0.88)
WU1856	2.93 (0.27)	17 7/8" (454)	23 5/8" (600)	6.19 (0.58)	3.47 (0.32)	16 1/2" (420)	10.07 (0.94)
WU18510	3.18 (0.30)	17 7/8" (454)	25 5/8" (650)	6.63 (0.62)	3.72 (0.35)	12 1/2" (318)	10.67 (0.99)
WU1862	3.43 (0.32)	17 7/8" (454)	27 5/8" (701)	7.06 (0.66)	3.97 (0.37)	8 1/2" (216)	11.28 (1.05)
WU20310	1.71 (0.16)	21 7/8" (556)	11 1/4" (286)	4.95 (0.46)	2.61 (0.24)	36 1/2" (928)	8.24 (0.77)
WU2042	2.02 (0.19)	21 7/8" (556)	13 1/4" (337)	5.50 (0.51)	2.91 (0.27)	32 1/2" (826)	8.96 (0.83)
WU2046	2.32 (0.22)	21 7/8" (556)	15 1/4" (388)	6.04 (0.56)	3.22 (0.30)	28 1/2" (724)	9.67 (0.90)
WU20410	2.62 (0.24)	21 7/8" (556)	17 1/4" (438)	6.59 (0.61)	3.52 (0.33)	24 1/2" (623)	10.38 (0.96)
WU2052	2.93 (0.27)	21 7/8" (556)	19 1/4" (489)	7.13 (0.66)	3.83 (0.36)	20 1/2" (521)	11.09 (1.03)
WU2056	3.23 (0.30)	21 7/8" (556)	21 1/4" (540)	7.68 (0.71)	4.13 (0.38)	16 1/2" (420)	11.80 (1.10)
WU20510	3.54 (0.33)	21 7/8" (556)	23 1/4" (591)	8.22 (0.76)	4.44 (0.41)	12 1/2" (318)	12.51 (1.16)
WU2062	3.84 (0.36)	21 7/8" (556)	25 1/4" (642)	8.77 (0.81)	4.74 (0.44)	8 1/2" (216)	13.23 (1.23)
WU2446	2.21 (0.21)	25 7/8" (658)	12 1/4" (312)	7.12 (0.66)	3.64 (0.34)	28 1/2" (724)	10.99 (1.02)
WU24410	2.57 (0.24)	25 7/8" (658)	14 1/4" (363)	7.78 (0.72)	4.00 (0.37)	24 1/2" (623)	11.81 (1.10)
WU2452	2.93 (0.27)	25 7/8" (658)	16 1/4" (413)	8.44 (0.78)	4.36 (0.41)	20 1/2" (521)	12.63 (1.17)
WU2456E	3.29 (0.31)	25 7/8" (658)	18 1/4" (464)	9.09 (0.84)	4.72 (0.44)	16 1/2" (420)	13.46 (1.25)
WU24510	3.65 (0.34)	25 7/8" (658)	20 1/4" (515)	9.75 (0.91)	5.08 (0.47)	12 1/2" (318)	14.28 (1.33)
WU2462	4.01 (0.37)	25 7/8" (658)	22 1/4" (566)	10.40 (0.97)	5.44 (0.51)	8 1/2" (216)	15.10 (1.40)
WU26410	2.42 (0.23)	27 7/8" (708)	12 1/2" (318)	8.34 (0.78)	4.21 (0.39)	24 1/2" (623)	12.49 (1.16)
WU2652	2.81 (0.26)	27 7/8" (708)	14 1/2" (368)	9.06 (0.84)	4.59 (0.43)	20 1/2" (521)	13.37 (1.24)
WU2656	3.20 (0.30)	27 7/8" (708)	16 1/2" (419)	9.77 (0.91)	4.98 (0.46)	16 1/2" (420)	14.25 (1.32)
WU26510	3.58 (0.33)	27 7/8" (708)	18 1/2" (470)	10.48 (0.97)	5.37 (0.50)	12 1/2" (318)	15.13 (1.41)
WU2662	3.97 (0.37)	27 7/8" (708)	20 1/2" (521)	11.19 (1.04)	5.76 (0.53)	8 1/2" (216)	16.01 (1.49)
WU2852	2.59 (0.24)	29 7/8" (759)	12 1/2" (317)	9.65 (0.90)	4.80 (0.45)	20 1/2" (521)	14.08 (1.31)
WU2856	3.01 (0.28)	29 7/8" (759)	14 1/2" (368)	10.42 (0.97)	5.22 (0.48)	16 1/2" (420)	15.01 (1.40)
WU28510	3.42 (0.32)	29 7/8" (759)	16 1/2" (419)	11.19 (1.04)	5.63 (0.52)	12 1/2" (318)	15.95 (1.48)
WU2862	3.84 (0.36)	29 7/8" (759)	18 1/2" (470)	11.95 (1.11)	6.05 (0.56)	8 1/2" (216)	16.88 (1.57)
WU21042	3.13 (0.29)	31 7/8" (810)	14 1/8" (359)	8.35 (0.78)	4.31 (0.40)	32 1/2" (826)	12.52 (1.16)
WU21046	3.57 (0.33)	31 7/8" (810)	16 1/8" (409)	9.17 (0.85)	4.75 (0.44)	28 1/2" (724)	13.51 (1.26)
WU210410	4.01 (0.37)	31 7/8" (810)	18 1/8" (460)	10.00 (0.93)	5.19 (0.48)	24 1/2" (623)	14.50 (1.35)
WU21052	4.46 (0.41)	31 7/8" (810)	20 1/8" (511)	10.82 (1.01)	5.64 (0.52)	20 1/2" (521)	15.49 (1.44)
WU21056	4.90 (0.46)	31 7/8" (810)	22 1/8" (562)	11.64 (1.08)	6.08 (0.56)	16 1/2" (420)	16.48 (1.53)
WU210510	5.34 (0.50)	31 7/8" (810)	24 1/8" (613)	12.46 (1.16)	6.52 (0.61)	12 1/2" (318)	17.47 (1.62)
WU21062 ◊	5.78 (0.54)	31 7/8" (810)	26 1/8" (663)	13.29 (1.23)	6.96 (0.65)	8 1/2" (216)	18.46 (1.72)
WU3042	3.13 (0.29)	33 7/8" (861)	13 5/16" (338)	8.86 (0.82)	4.51 (0.42)	32 1/2" (826)	13.15 (1.22)
WU3046	3.60 (0.34)	33 7/8" (861)	15 5/16" (389)	9.73 (0.90)	4.98 (0.46)	28 1/2" (724)	14.20 (1.32)
WU30410	4.07 (0.38)	33 7/8" (861)	17 5/16" (440)	10.61 (0.99)	5.46 (0.51)	24 1/2" (623)	15.24 (1.42)
WU3052	4.54 (0.42)	33 7/8" (861)	19 5/16" (490)	11.49 (1.07)	5.93 (0.55)	20 1/2" (521)	16.29 (1.51)
WU3056	5.02 (0.47)	33 7/8" (861)	21 5/16" (541)	12.37 (1.15)	6.40 (0.59)	16 1/2" (420)	17.33 (1.61)
WU30510	5.49 (0.51)	33 7/8" (861)	23 5/16" (592)	13.25 (1.23)	6.87 (0.64)	12 1/2" (318)	18.38 (1.71)
WU3062 ◊	5.96 (0.55)	33 7/8" (861)	25 5/16" (643)	14.13 (1.31)	7.34 (0.68)	8 1/2" (216)	19.42 (1.80)
WU34410	4.09 (0.38)	37 7/8" (962)	15 1/2" (395)	11.81 (1.10)	5.95 (0.55)	24 1/2" (623)	16.69 (1.55)
WU3452	4.61 (0.43)	37 7/8" (962)	17 1/2" (445)	12.80 (1.19)	6.47 (0.60)	20 1/2" (521)	17.85 (1.66)
WU3456	5.14 (0.48)	37 7/8" (962)	19 1/2" (496)	13.79 (1.28)	7.00 (0.65)	16 1/2" (420)	19.01 (1.77)
WU34510	5.67 (0.53)	37 7/8" (962)	21 1/2" (547)	14.78 (1.37)	7.53 (0.70)	12 1/2" (318)	20.16 (1.87)
WU3462	6.19 (0.58)	37 7/8" (962)	23 1/2" (598)	15.77 (1.47)	8.05 (0.75)	8 1/2" (216)	21.32 (1.98)
WU3852	4.52 (0.42)	41 7/8" (1064)	15 1/2" (394)	14.06 (1.31)	6.97 (0.65)	20 1/2" (521)	19.36 (1.80)
WU3856	5.10 (0.47)	41 7/8" (1064)	17 1/2" (445)	15.16 (1.41)	7.55 (0.70)	16 1/2" (420)	20.63 (1.92)
WU38510	5.68 (0.53)	41 7/8" (1064)	19 1/2" (496)	16.27 (1.51)	8.13 (0.76)	12 1/2" (318)	21.90 (2.03)
WU3862	6.26 (0.58)	41 7/8" (1064)	21 1/2" (547)	17.37 (1.61)	8.71 (0.81)	8 1/2" (216)	23.16 (2.15)

• Top of Subfloor to Top of Inside Sill Stop is calculated based upon a structural header height of 6'-10 1/2" (2096).
• Dimensions in parentheses are in millimeters or square meters.
◊Meets or exceeds clear opening area of 5.7 sq. ft. or 0.53 m², clear opening width of 20" (508) and clear opening height of 24" (610).

WOODWRIGHT® DOUBLE-HUNG FULL-FRAME WINDOWS

Custom Sizes

Available in 1/8" (3) increments between minimum and maximum widths and heights. Windows can also be custom sized to match standard sizes ending in 1/16" (1.5). Some restrictions apply; contact your Andersen supplier. For minimum rough opening dimensions for joined windows, see specific joining instruction guides. Measurement guide for custom-size windows can be found at **andersenwindows.com/measure**.

Woodwright® Double-Hung Windows

Equal

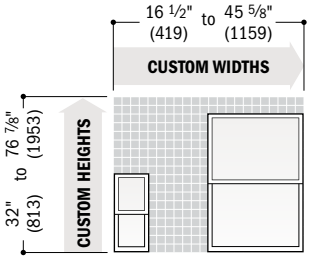

2:3 Cottage

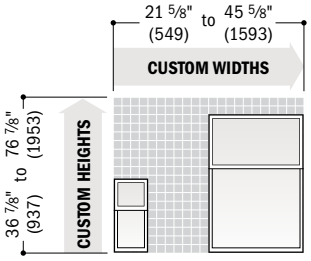

3:2 Reverse Cottage

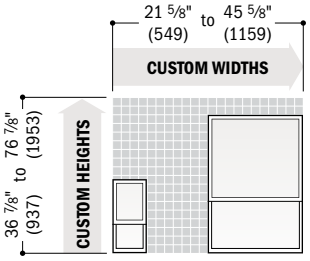

Woodwright® Picture and Transom Windows

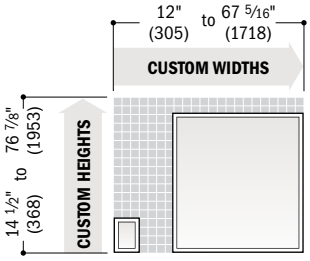

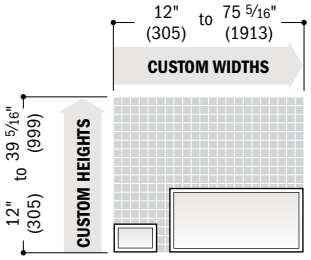

Woodwright® Springline™ Single-Hung Windows

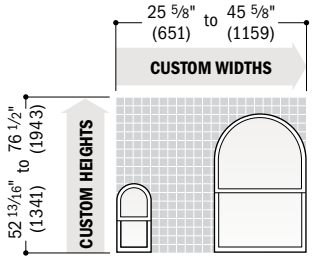

Side-by-side joining of two Springline windows is not recommended.

Woodwright® Arch Double-Hung Windows

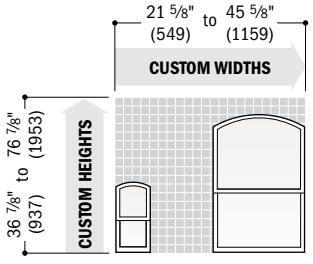

Side-by-side joining of two arch windows is not recommended.

Woodwright® Unequal Leg Arch Double-Hung Windows

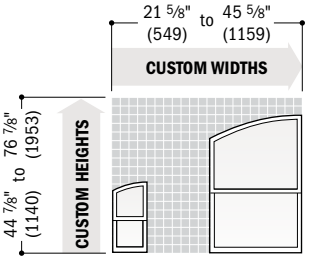

Short side joining of unequal leg arch windows is not recommended.

• Dimensions in parentheses are in millimeters.

Grille Patterns

	Prairie A	6-Light Prairie	Colonial	Renaissance
Woodwright® Double-Hung	Equal, Cottage	Equal, Cottage	Equal, Cottage	
Woodwright Arch Double-Hung				

	Prairie A	6-Light Prairie	Colonial	Renaissance
Woodwright Springline™ Single-Hung				
Woodwright Unequal Leg Arch Double-Hung				

	Prairie A	Colonial	Modified Colonial	Modified Colonial with Simulated Meeting Rail	Tall Fractional	Tall Fractional with Simulated Meeting Rail	Short Fractional	Short Fractional with Simulated Meeting Rail	Victorian
Woodwright Picture									
Woodwright Transom									

Patterns for double- and single-hung windows are also available in Upper Sash Only (USO) configurations. For picture window patterns that require alignment with double- or single-hung window patterns, identify the sash style (equal, cottage or reverse cottage) when ordering.

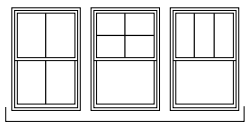

Specified Equal Light Examples

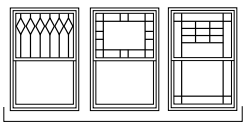

Custom Pattern Examples

Number of lights and overall pattern varies with window size. Patterns may not be available in all configurations or sizes. Specified equal light and custom patterns are also available. For more grille options, see page 18 or visit **andersenwindows.com/grilles**.

Details for Woodwright® Transom Windows

Scale 1 1/2" (38) = 1'-0" (305) – 1:8

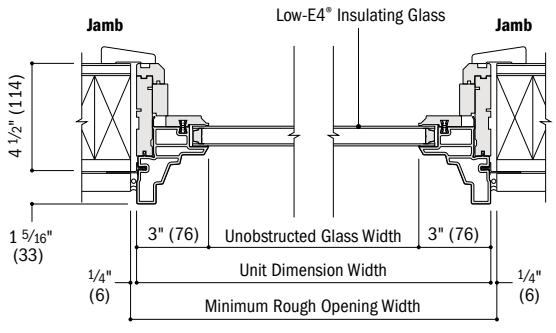

Horizontal Section

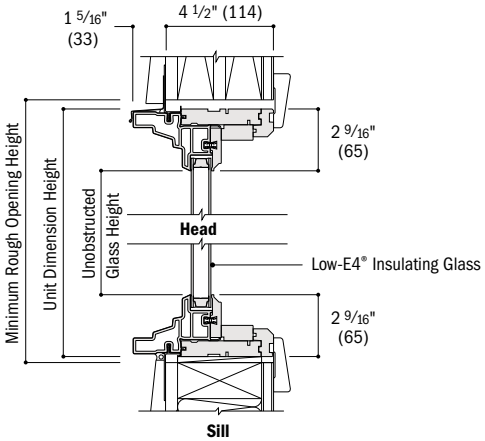

Vertical Section

- **Minimum rough openings may need to be increased to allow for use of building wraps, flashing, sill panning, brackets, fasteners or other items. See installation information on pages 222-223.**
- Details are for illustration only and are not intended to represent product installation methods or materials. Refer to product installation guides at andersenwindows.com.
- Dimensions in parentheses are in millimeters.

Details for Woodwright® Double-Hung Windows

Scale 1 1/2" (38) = 1'-0" (305) – 1:8

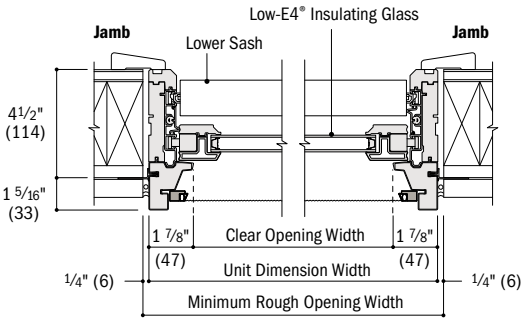

Horizontal Section

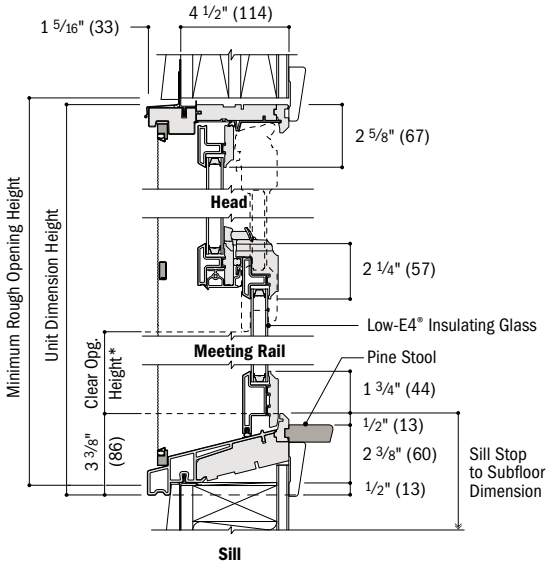

Vertical Section

Details for Woodwright® Picture Windows

Scale 1 1/2" (38) = 1'-0" (305) – 1:8

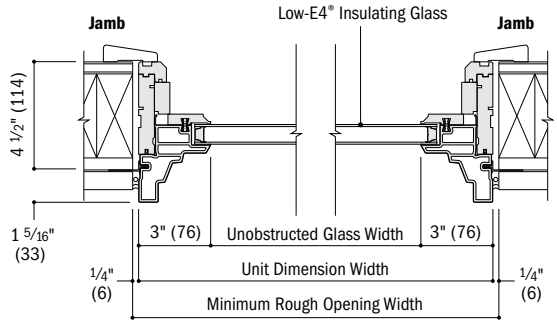

Horizontal Section

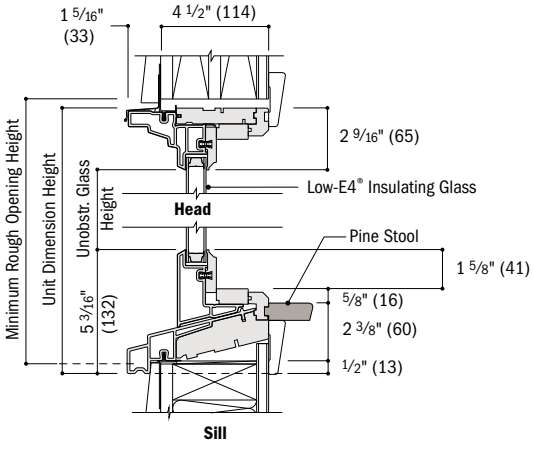

Vertical Section

- Light-colored areas are parts included with window. Dark-colored areas are additional Andersen® parts required to complete window assembly as shown.
- **Minimum rough openings may need to be increased to allow for use of building wraps, flashing, sill panning, brackets, fasteners or other items. See installation information on pages 222-223.**
- Details are for illustration only and are not intended to represent product installation methods or materials. Refer to product installation guides at andersenwindows.com.
- Dimensions in parentheses are in millimeters.
- *Clear opening height dimension is less on arch, unequal leg arch and Springline™ hung windows.

Horizontal (stack) Joining Detail

Scale 1 1/2" (38) = 1'-0" (305) – 1:8

Overall Window Dimension Height

Sum of individual window heights plus 1/16" (1.5) per join.

Overall Rough Opening Height

Overall window dimension height.*

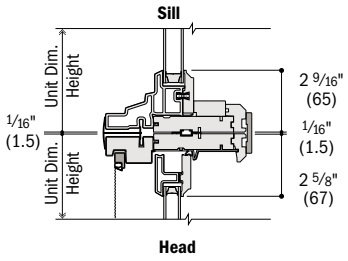

Vertical Section

Woodwright® Transom (**WTR**) over Woodwright Double-Hung

Vertical (ribbon) Joining Detail

Scale 1 1/2" (38) = 1'-0" (305) – 1:8

Overall Window Dimension Width

Sum of individual window widths plus 1/16" (1.5) per join.

Overall Rough Opening Width

Overall window dimension width plus 1/2" (13).

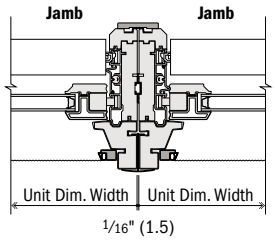

Horizontal Section

Woodwright® Double-Hung to Woodwright Double-Hung

For more information on joining, refer to the Combination Designs section starting on page 183.

Separate Rough Openings Detail

Scale 1 1/2" (38) = 1'-0" (305) – 1:8

To meet structural requirements or to achieve a wider joined appearance, windows may be installed into separate rough openings having vertical support by others in combination with Andersen® exterior filler and exterior vinyl trim.

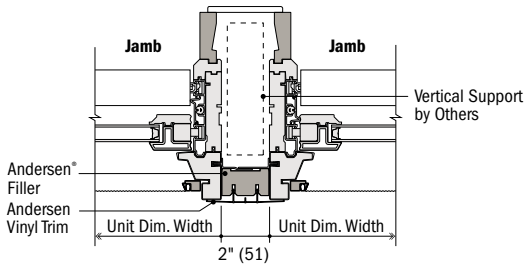

Horizontal Section

Woodwright® Double-Hung and Woodwright Double-Hung

- Light-colored areas are parts included with window. Dark-colored areas are additional Andersen® parts required to complete window assembly as shown.
- **Minimum rough openings may need to be increased to allow for use of building wraps, flashing, sill panning, brackets, fasteners or other items. See installation information on pages 222-223.**
- Details are for illustration only and are not intended to represent product installation methods or materials. Refer to product installation guides at andersenwindows.com.
- Structural performance of any combination is only as high as the lowest structural performance of any individual product or join in the combination.
- Consult with an architect or structural engineer regarding minimum requirements for structural support members between adjacent rough openings.
- Dimensions in parentheses are in millimeters.

*For stacks where bottom unit in combination is a double-hung or picture window with a sloped sill. If bottom window has a flat sill, add 1/2" (13) to the overall window dimension height.

NOTES



WOODWRIGHT® DOUBLE-HUNG INSERT WINDOWS

Custom Sizes 74
Specifications 74
Existing Window Measurements 75
Sill Angle Details 75
Grille Patterns 76
Window Details 76-77
Joining Detail 77
Product Performance 199

CUSTOM SIZING
in ⅛" (3) increments

CUSTOM SIZES

Dimensions in parentheses are in millimeters.

WOODWRIGHT® DOUBLE-HUNG INSERT WINDOWS

FEATURES

FRAME

Ⓐ A Fibrex® material exterior protects the frame – beautifully. Best of all, it's low maintenance and never needs painting.*

Ⓑ Sill members are constructed with a wood core and Fibrex® material exterior for exceptional, long-lasting* performance.

Ⓒ Natural wood stops are available in pine, maple, oak and prefinished white. Wood jamb liners add beauty and authenticity to the window interior.

Ⓓ Multiple weatherstrip systems help provide a barrier against wind, rain and dust. The combination of spring-tension vinyl, rigid vinyl and flexible bulb weatherstrip is efficient and effective.

Ⓔ Exterior stop covers are specially designed to allow easy application of high-quality sealant.

A 3 ¼" (83) "pocket window" jamb depth allows convenient replacement without disturbing interior window trim for most double-hung replacement situations.

Ⓕ For units with a white exterior color, the exterior jamb liner is white. For all other units, the exterior jamb liner is gray.

SASH

Ⓖ Balancers in the sash enable contractors to screw through the jamb during installation without interfering with the window's operation.

Wood Jamb Liner

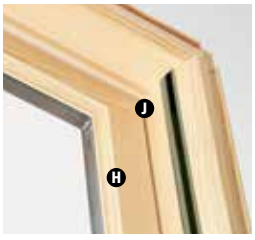

Ⓗ The sash interior is natural wood with classic chamfer detailing. Available in pine, maple, oak and prefinished white.

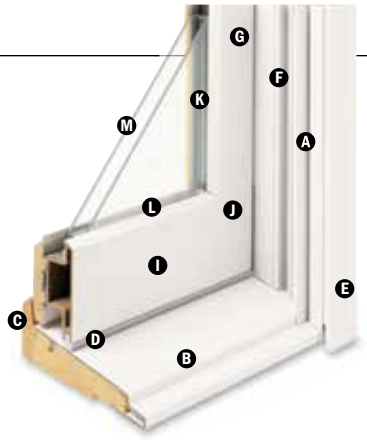

Ⓘ The low-maintenance sash exterior provides long-lasting* protection and performance. Sash exteriors on most units include Fibrex material.

Ⓙ Sash joints simulate the look of traditional mortise-and-tenon construction inside and out.

GLASS

Ⓚ Glass spacers are available in black, stainless steel and white.

Ⓛ Silicone bed glazing provides superior weathertightness and durability.

Ⓜ High-Performance glass options include:

- Low-E4® glass
- Low-E4 HeatLock® glass
- Low-E4 SmartSun™ glass
- Low-E4 SmartSun HeatLock glass
- Low-E4 Sun glass
- Low-E4 PassiveSun® HeatLock glass

Tempered and other glass options are available. Contact your Andersen supplier.

A removable translucent film helps shield the glass from damage during delivery and construction, and simplifies finishing at the job site.

Patterned Glass

Patterned glass options are available. See page 11 for more details.

HARDWARE



The standard lock and keeper design provides an easy Tilt-to-Clean feature integrated into the lock.

SILL ANGLES

Sill angles of 0,° 8° and 14° are available to closely match the existing sill in window replacement applications. See page 75 for details.



0° Sill Angle



8° Sill Angle



14° Sill Angle

INSTALLATION

Exterior Stop Cover



An exterior stop cover provides a clean transition from the new window to the existing window casing.

Included Installation Materials



Flat self-hanging shims, backer rod, installation screws and complete instructions are included with each insert window. See the measurement guide and worksheet at andersenwindows.com/measure.

SASH OPTIONS**



Cottage



Reverse Cottage

*Visit andersenwindows.com/warranty for details.
**Shown on 400 Series tilt-wash double-hung full-frame windows.
Dimensions in parentheses are in millimeters.

EXTERIORS & INTERIORS

EXTERIOR COLORS

White | Canvas | Sandtone | Terratone

Dark Bronze | Forest Green | Black

INTERIOR OPTIONS

Pine | Maple

Oak | White

HARDWARE



Lock & Keeper

Antique Brass | Black | Bright Brass
Distressed Bronze | **Distressed Nickel**
Oil Rubbed Bronze | Satin Nickel
Stone | White

OPTIONAL HARDWARE Sold Separately

TRADITIONAL



Bar Lift

Available in all hardware finishes. Shown in satin nickel.

TRADITIONAL



Hand Lift | Finger Lifts

Available in all hardware finishes. Shown in bright brass.

CLASSIC SERIES™



Bar Lift

Stone | **White**

CLASSIC SERIES



Hand Lift | Finger Lifts

Stone | White

CONTEMPORARY



Bar Lift

Available in all hardware finishes. Shown in white.

ESTATE™



Hand Lift | Finger Lifts

Antique Brass | Bright Brass
Distressed Bronze | Distressed Nickel
Oil Rubbed Bronze | Satin Nickel

Bold name denotes finish shown.

HARDWARE FINISHES

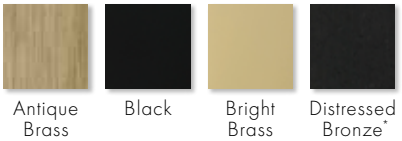

Antique Brass | Black | Bright Brass | Distressed Bronze* | Distressed Nickel

Oil Rubbed Bronze* | Satin Nickel | Stone | White

ACCESSORIES Sold Separately

FRAME

Wood Interior Stop



An optional interior stop with matching chamfer is available.

SASH

Window Opening Control Device



A window opening control device is available, which limits sash travel to less than 4" (102) when the window is first opened. Available factory applied, or as a field-applied kit in stone or white.

INSTALLATION

Coil Stock

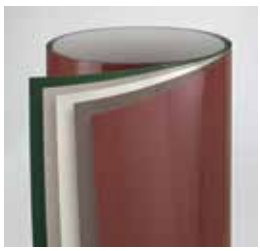

Made from .018"-thick aluminum, Andersen® coil stock is available in 24" (610) x 50' (15240) rolls and can be ordered in white, canvas, prairie grass, Sandtone, Terratone, cocoa bean, dark bronze, red rock, forest green, dove gray and black. Color-matched 1 ¼" (32)-long stainless steel trim nails are also available and can be ordered in 1 lb/.454 kg boxes. Coil stock can be cut and formed to profiles at the job site.

INSECT SCREENS

Insect Screen Frames



Choose full insect screen or half insect screen. The half insect screen (shown above) allows ventilation without affecting the view through the upper sash. Frames are available in colors to match product exteriors.

TruScene® Insect Screens

Our TruScene insect screens let in over 25% more fresh air** and provide 50% greater clarity than conventional Andersen insect screens, all while keeping out unwanted small insects.

Conventional Insect Screens

Conventional insect screens have charcoal gray powder-coated aluminum screen mesh.

GRILLES

Grilles are available in a variety of configurations and widths. See page 18 for details.

CAUTION: Painting and staining may cause damage to rigid vinyl. Andersen does not warrant the adhesion or performance of homeowner-applied paint over vinyl or other factory-coated surfaces. For vinyl painting instructions and preparation, contact your Andersen supplier. Do not paint weatherstrip. Creosote-based stains should not come in contact with Andersen products. Abrasive cleaners or solutions containing corrosive solvents should not be used on Andersen products. See page 223 for a complete list of cautions.

*These finishes are "living finishes" that will change with time and use, see limited warranty for details.
**TruScene insect screens let in over 25% more fresh air than standard Andersen fiberglass insect screens.
Naturally occurring variations in grain, color and texture of wood make each window one of a kind.
All wood interiors are unfinished unless a finish is specified.
Printing limitations prevent exact replication of colors and finishes.
See your Andersen supplier for actual color and finish samples
Dimensions in parentheses are in millimeters.

Custom Sizes and Specification Formulas

Woodwright® Double-Hung Insert

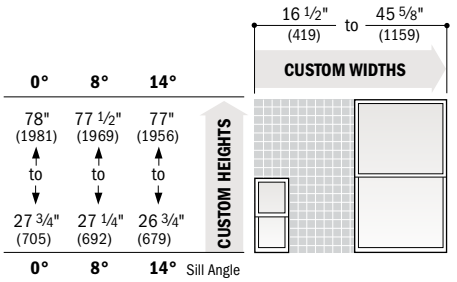

Woodwright Double-Hung Insert – Cottage & Reverse Cottage

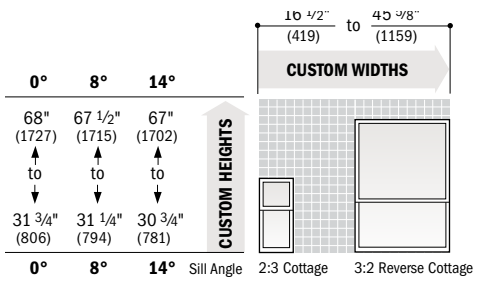

Woodwright Picture Insert

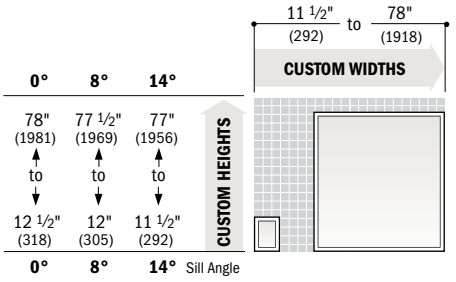

Woodwright Transom Insert

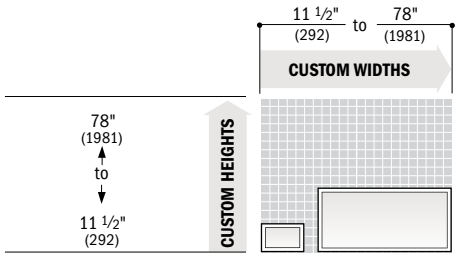

Woodwright® Double-Hung Insert Windows

Clear Opening

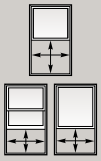

Width = window width − 3.4375" (87)

Height = *Depends on sash ratio and specific sill angle of insert window; see below.*

Sash Ratio	Clear Opening Height	Sill Angle Deduction 14°	8°	0°
Equal	= (window height ÷ 2) − sill angle deduction	3.1875" (81)	3.4375" (87)	3.75" (95)
2:3 Cottage	= (window height x 2) ÷ 5 − sill angle deduction	2.875" (73)	3.0625" (78)	3.25" (83)
3:2 Reverse Cottage	= (window height x 2) ÷ 5 − sill angle deduction	2.375" (60)	2.5625" (65)	2.8125" (71)

Vent Opening

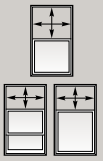

Width = window width − 3.4375" (87)

Height = *Depends on sash ratio and specific sill angle of insert window; see below.*

Sash Ratio	Vent Opening Height	Sill Angle Deduction 14°	8°	0°
Equal, **Height** < 48" (1219)	= ((window height ÷ 2) − sill angle deduction) − 6.5" (165)	2.75" (70)	2.9375" (75)	3.25" (83)
Equal, **Height** > 48" (1219)	= ((window height ÷ 2) − sill angle deduction) − 11.5" (292)			
Cottage, **Height** < 48" (1219)	= ((window height x 2) ÷ 5 − sill angle deduction) − 6.5" (165)	1.9375" (49)	2.125" (54)	2.375" (60)
Cottage, **Height** > 48" (1219)	= ((window height x 2) ÷ 5 − sill angle deduction) − 11.5" (292)			
Reverse Cottage, **Height** < 48" (1219)	= ((window height x 2) ÷ 5 − sill angle deduction) − 6.5" (165)	3.5625" (90)	3.8125" (97)	4.8125" (122)
Reverse Cottage, **Height** > 48" (1219)	= ((window height x 2) ÷ 5 − sill angle deduction) − 11.5" (292)			

Unobst. Glass

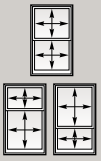

Width = window width − 6.0" (152)

Height = *Depends on sash ratio and specific sill angle of insert window; see below.*

Sash Ratio	Unobstructed Glass Height	Sill Angle Deduction 14°	8°	0°
Equal Upper and Lower Sash	= (window height ÷ 2) − sill angle deduction	7.875" (200)	8.375" (213)	9.0" (229)
Cottage Upper Sash or Reverse Cottage Lower Sash	= (window height x 2) ÷ 5 − sill angle deduction	3.1875" (81)	3.375" (86)	3.625" (92)
Cottage Lower Sash or Reverse Cottage Upper Sash	= (window height x 2) ÷ 5 − sill angle deduction	4.75" (121)	5.0625" (129)	5.4375" (138)

Woodwright® Picture and Transom Insert Windows

Unobst. Glass

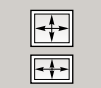

Picture Insert

Width = window width − 6.0" (152)

Height = *Depends on sash ratio and specific sill angle of insert window; see below.*

Unobstructed Glass Height	Sill Angle Deduction 14°	8°	0°
= window height − sill angle deduction	5.816" (148)	6.285" (160)	6.890" (175)

Transom Insert

Width = window width − 6.0" (152)

Height = window width − 6.0" (152)

Available in 1/8" (3) increments between minimum and maximum widths and heights. Height limits for double-hung and picture insert windows depend on new insert window sill angle.

For picture and transom insert windows, either height or width must be 68" (1727) or less, and height plus width cannot be less than 28" (711).

Measurement guide for custom-size windows can be found at **andersenwindows.com/measure**.

Grille patterns shown on page 76.
Details shown on pages 76 and 77.

- **Clear Opening** formulas provide dimensions for determining area available for egress. **Vent Opening** formulas provide dimensions for determining area available for passage of air. **Unobst. Glass** (unobstructed glass) formulas provide dimensions for determining area available for passage of light.
- Refer to andersenwindows.com/measure for detailed instructions on how to properly measure for insert windows.
- Dimensions in parentheses are in millimeters.

Existing Window Measurements

Required measurements:

1. Existing Opening Height

2. Existing Sill Angle

3. Existing Opening Width

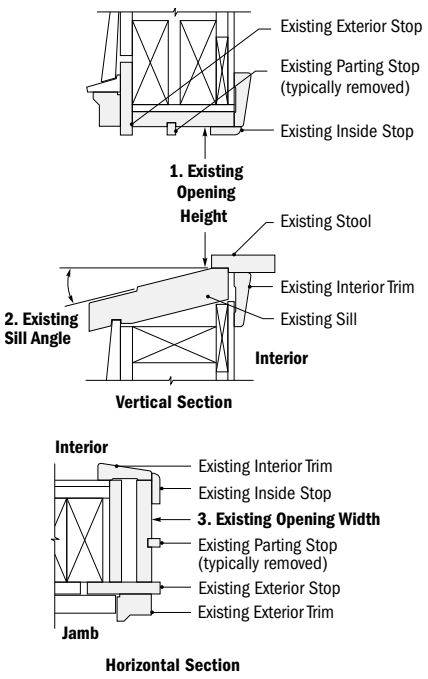

Existing Double-Hung Window

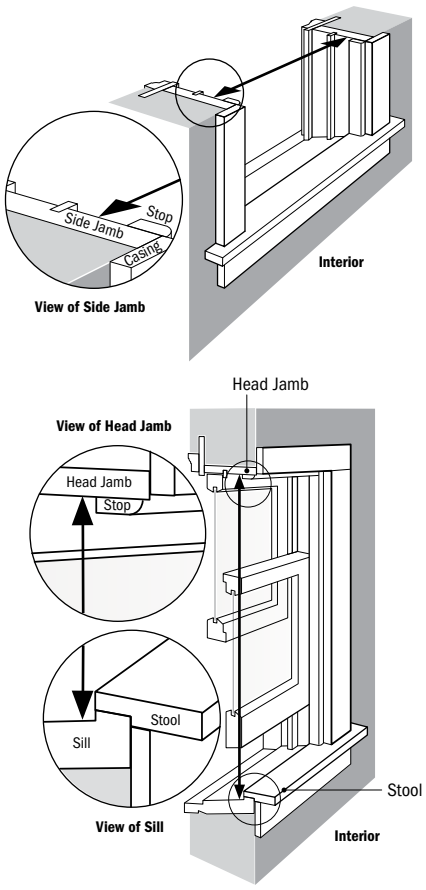

Existing Picture Window

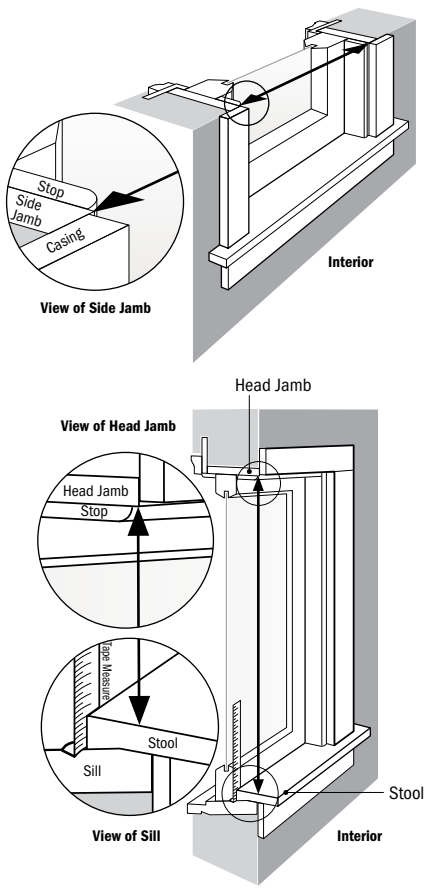

Sill Angle Details

Scale 3" (76) = 1'-0" (305) – 1:4

Select a sill angle that most closely matches your existing sill angle.

Windows with a smaller sill angle will have a larger maximum height.

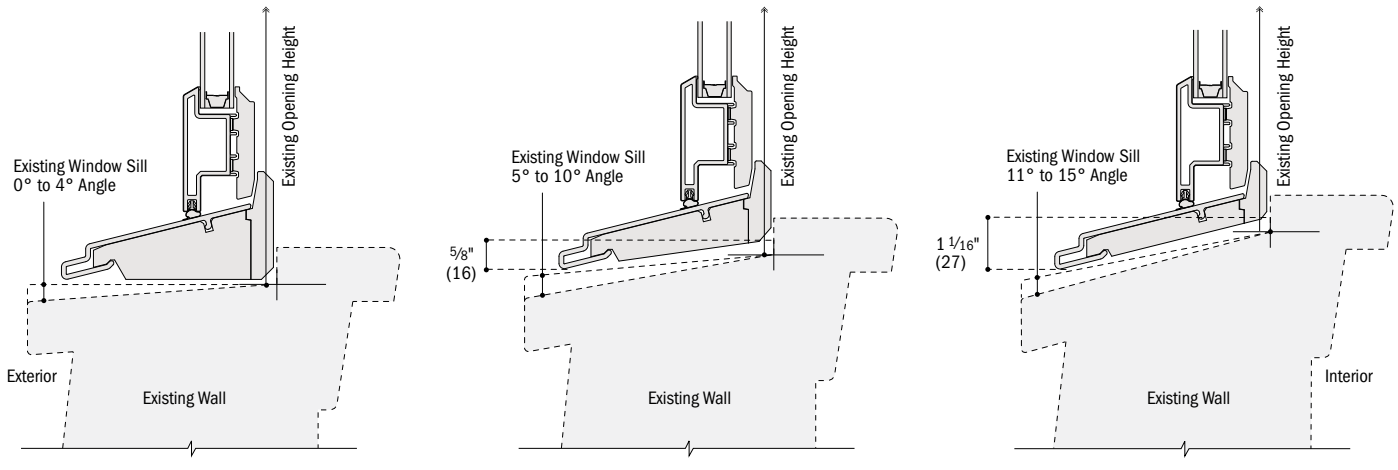

- Details are for illustration only and are not intended to represent product installation methods or materials. Refer to product installation guides at andersenwindows.com.
- Refer to andersenwindows.com/measure for detailed instructions on how to properly measure for insert windows.
- Dimensions in parentheses are in millimeters.

Grille Patterns

	Prairie A		6-Light Prairie		Specified Equal Light	
Woodwright® Double-Hung Insert	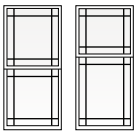 Equal	Cottage	Equal	Cottage	Equal	Cottage

	Prairie A	Specified Equal Light
Woodwright Transom Insert		
Woodwright Picture Insert	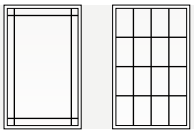	

Patterns for double-hung windows are also available in Upper Sash Only (USO) configurations. For picture window patterns that require alignment with double-hung window patterns, identify the sash style (equal, cottage or reverse cottage) when ordering.

Number of lights and overall pattern varies with window size. Patterns may not be available in all configurations or sizes. For more grille options, see page 18 or visit **andersenwindows.com/grilles**.

Details for Woodwright® Double-Hung Insert Windows

Scale 1 1/2" (38) = 1'-0" (305) – 1:8

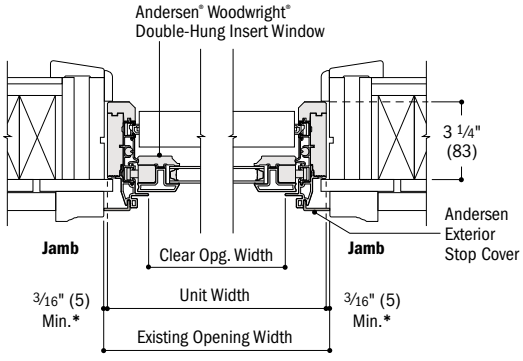

Horizontal Section

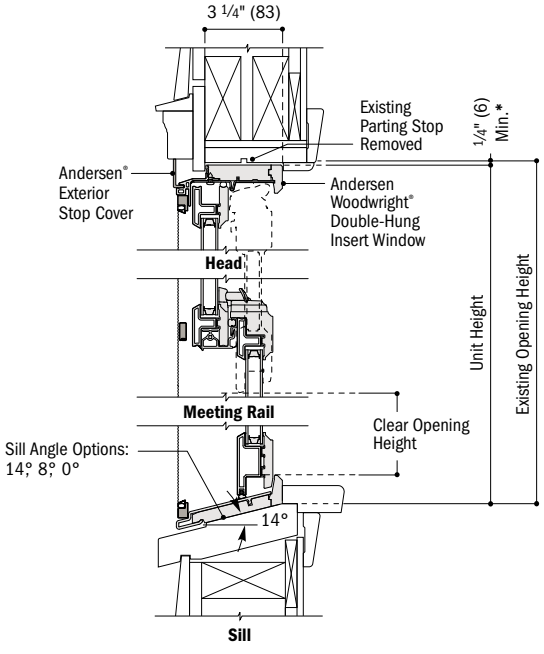

Vertical Section

- Light-colored areas are parts included with window. Dark-colored areas are additional Andersen® parts required to complete window assembly as shown.
- Details are for illustration only and are not intended to represent product installation methods or materials. Refer to product installation guides at andersenwindows.com.
- Dimensions in parentheses are in millimeters.

*Refer to andersenwindows.com/measure for detailed instructions on how to properly measure for insert windows.

Details for Woodwright® Picture Insert Windows

Scale 1 1/2" (38) = 1'-0" (305) – 1:8

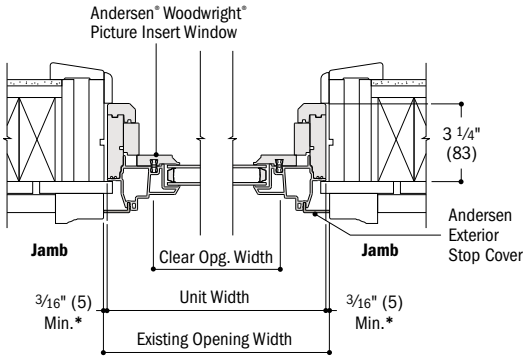

Horizontal Section

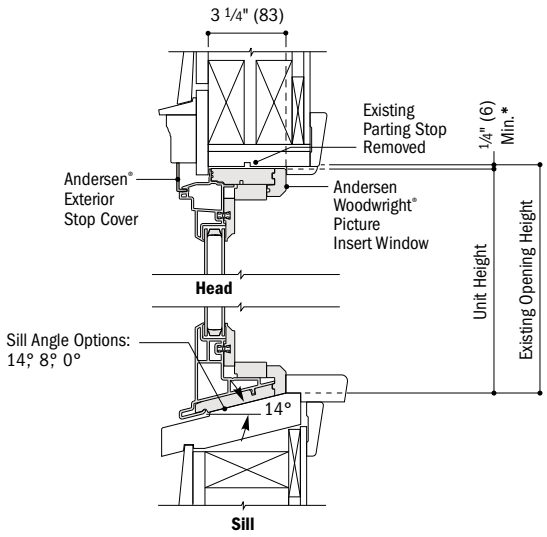

Vertical Section

Details for Woodwright® Transom Insert Windows

Scale 1 1/2" (38) = 1'-0" (305) – 1:8

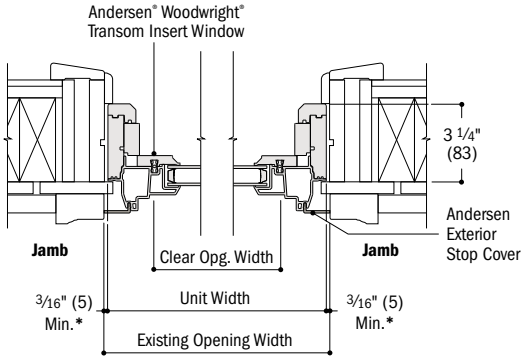

Horizontal Section

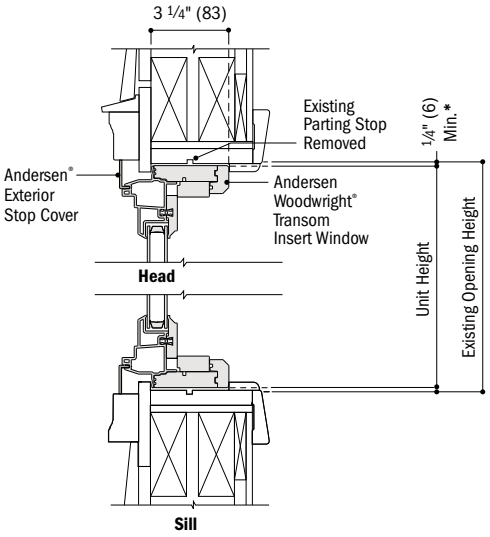

Vertical Section

Joining Combinations

Join insert windows in one-way horizontal (stack) or vertical (ribbon) combinations.

Do not join insert windows in two-way combinations.

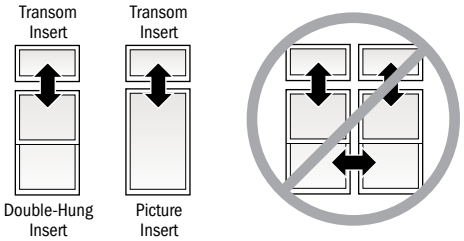

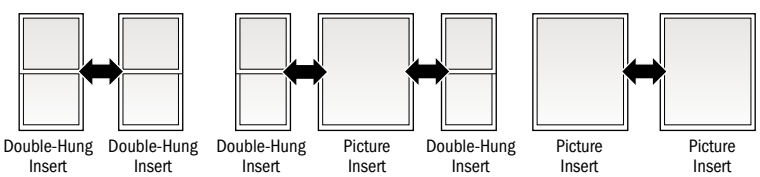

Vertical (ribbon) Joining Detail

Scale 1 1/2" (38) = 1'-0" (305) – 1:8

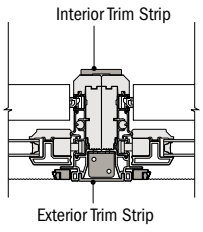

Horizontal Section

Woodwright® Double-Hung Insert to Woodwright Double-Hung Insert

For more information on joining, refer to the Combination Designs section starting on page 183.

- Light-colored areas are parts included with window. Dark-colored areas are additional Andersen® parts required to complete window assembly as shown.
- Details are for illustration only and are not intended to represent product installation methods or materials. Refer to product installation guides at andersenwindows.com.
- Structural performance of any combination is only as high as the lowest structural performance of any individual product or join in the combination.
- Dimensions in parentheses are in millimeters.

*Refer to andersenwindows.com/measure for detailed instructions on how to properly measure for insert windows.

NOTES



TILT-WASH DOUBLE-HUNG FULL-FRAME WINDOWS

Tables of Sizes 82-85
Specifications 83-84, 86-87
Custom Sizes 88
Grille Patterns 89
Window Details 89-90
Joining Details 90
Narroline® Conversion Kit 91
Combination Designs 183
Product Performance 199

CUSTOM SIZING
in ⅛" (3) increments

CUSTOM SIZES

Dimensions in parentheses are in millimeters.

TILT-WASH DOUBLE-HUNG FULL-FRAME WINDOWS

FEATURES

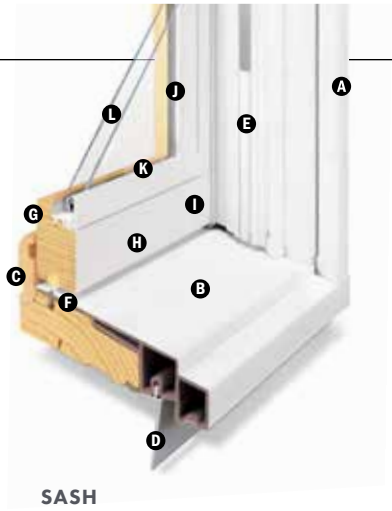

FRAME

A Exterior outer frame members are covered with a Perma-Shield® rigid vinyl cladding that minimizes maintenance and provides an attractive appearance.

B Sill members are constructed with a wood core and Fibrex® material exterior for exceptional, long-lasting* performance. Sill ends are protected and sealed with weather-resistant covers.

C Natural wood stops are available in pine, and prefinished white, dark bronze and black.**

D A factory-applied rigid vinyl installation flange on the head, sill and sides of the outer frame helps secure the unit to the structure.

E An extruded rigid vinyl jamb liner and fin provide a protective seal against the outer frame members. Jamb liners are available in gray or white, and must be specified when ordering. Contact your Andersen supplier for details.



Unique block-and-tackle balancers feature sized-to-the-unit rust-resistant springs that require no adjustment. Glass-reinforced nylon balancer shoes provide smooth, reliable sash operation. They automatically lock the balancer into position when sash are tilted into wash mode. Sash can be removed, without tools, for drywall pass-through.

F Weatherstrip throughout the unit provides a long-lasting,* energy-efficient, weather-resistant seal. For the top and bottom rails, an encased foam material is used. The head jamb liner and sill have a rigid vinyl rib that the weatherstrip material compresses against. At the meeting rail, compressible vinyl bulb material is used. Side jamb liners use leaf-type weatherstrip with foam inserts.

SASH

Slide wash assists make it easy to tilt the sash into wash mode position.

G Wood sash members are treated with a water-repellent preservative for long-lasting* protection and performance. Interior surfaces are unfinished pine. Low-maintenance prefinished white interiors are also available.

H A polyester-stabilized coat with a Flexacron® finish is electrostatically applied to penetrate all exterior surfaces for maximum protection and a lustrous finish.

I Sash joints simulate the look of traditional mortise-and-tenon construction inside and out.

GLASS

J Glass spacers are available in black, stainless steel and white.

K Silicone bed glazing provides superior weathertightness and durability.

L High-Performance glass options include:

- Low-E4® glass
- Low-E4 HeatLock® glass
- Low-E4 SmartSun™ glass
- Low-E4 SmartSun HeatLock glass
- Low-E4 Sun glass
- Low-E4 PassiveSun® HeatLock glass

Tempered and other glass options are available. Contact your Andersen supplier.

A removable translucent film helps shield the glass from damage during delivery and construction, and simplifies finishing at the job site.

Patterned Glass

Patterned glass options are available. See page 11 for more details.

*Visit andersenwindows.com/warranty for details.
**Products with dark bronze or black interiors have matching exteriors.
†These finishes are "living finishes" that will change with time and use, see limited warranty for details.
"Flexacron" is a registered trademark of PPG Industries, Inc.
Naturally occurring variations in grain, color and texture of wood make each window one of a kind. All wood interiors are unfinished unless a finish is specified.
Printing limitations prevent exact replication of colors and finishes.
See your Andersen supplier for actual color and finish samples
Dimensions in parentheses are in millimeters.

EXTERIORS & INTERIORS

EXTERIOR COLORS



INTERIOR OPTIONS

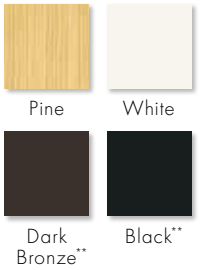

HARDWARE

TRADITIONAL



Lock & Keeper

Black | Stone | **White**

Stone finish is standard for pine interiors, and white finish is standard for white interiors. Other finishes are optional.

OPTIONAL HARDWARE Sold Separately

ESTATE™



Lock & Keeper

Antique Brass | **Bright Brass**
Distressed Bronze | Distressed Nickel
Oil Rubbed Bronze | Satin Nickel

Estate lock and keeper reduces the clear opening height by 9/16" (14). Consult your local building code official for egress code requirements in your area.

TRADITIONAL



Bar Lift

Available in all hardware finishes. Shown in black.

CONTEMPORARY



Bar Lift

Available in all hardware finishes. Shown in oil rubbed bronze.

TRADITIONAL



Hand Lift



Finger Lifts

Available in all hardware finishes. Shown in white.

Bold name denotes finish shown.

HARDWARE FINISHES



SASH OPTIONS



Cottage Reverse Cottage

PERFORMANCE OPTIONS

Performance Grade (PG) Upgrades

A high inside sill stop* with exterior sill brackets and hidden interior brackets provides additional structural support for tilt-wash windows, allowing standard non-impact glass units to achieve higher performance ratings. PG ratings are more comprehensive than Design Pressure (DP) ratings for measuring product performance. For up-to-date performance information of individual products, visit **andersenwindows.com**. Use of this option will subtract 5/8" (16) from the clear opening height. PG upgrades are not available for 72" (1829) and 76" (1930) heights. Contact your Andersen supplier for availability.

Coastal Windows

400 Series tilt-wash windows are available with Stormwatch® Protection. Visit **andersenwindows.com/coastal** or refer to the Andersen 400 Series Coastal Product Guide for more information.

StormWATCH PROTECTION

ACCESSORIES Sold Separately

FRAME

Extension Jambs



The base jamb depth is 4 1/2" (114). Extension jambs are available in unfinished pine, maple and oak or prefinished white, dark bronze and black. Some sizes may be veneered.

Factory-applied and non-applied extension jambs are available in 1/16" (1.5) increments between 4 9/16" (116) and 7 1/8" (181). Extension jambs can be factory applied to either three sides (stool and apron) or four sides (picture frame casing).

For overall jamb depths greater than 7 1/8" (181), interior extension jambs are available in 1/16" (1.5) increments between 7 1/8" (181) and 9" (229) for field application. They are available in 8' (2438) and 12' (3658) lineals.

Pine Stool



A clear pine stool is available and ready for finishing. The stool is available in 4 9/16" (116) for use in wall depths up to 5 1/4" (133) and in 6 9/16" (167) for use in wall depths up to 7 1/8" (181). Works with 2 1/4" (57) and 2 1/2" (64) casing widths.

HARDWARE

Window Opening Control Device



A recessed window opening control device is available, which limits the sash travel to less than 4" (102) when the window is first opened. Available factory applied, or as a field-applied kit in white, stone and black.

ENERGY PERFORMANCE PANEL**



A factory-installed energy performance panel provides greater energy efficiency for northern climates while allowing ventilation when needed. Constructed with an aluminum-framed single-pane upper and lower glass panels, and a charcoal powder-coated aluminum screen mesh. Available in white, Sandtone and Terratone to match product exteriors. Canvas, dark bronze, forest green and black are available by special order.

Combination units can improve Sound Transmission Class (STC) and Outdoor Indoor Transmission Class (OITC) ratings, and are ideal for projects near airports, busy roadways and other noisy environments. For example, adding a combination unit to a 400 Series tilt-wash double-hung (size 3862) unit with Low-E4® glass will improve its STC rating from 26 to 32. Contact your Andersen supplier for additional STC and OITC rating information.

A field-applied self-storing storm/insect screen combination unit** is also available.

ANDERSEN® ART GLASS

Available for 400 Series tilt-wash picture and transom windows. Andersen art glass panels come in a variety of original patterns. For more information, see the Art Glass section starting on page 175 or visit **andersenwindows.com/artglass**.

INSECT SCREENS

Insect Screen Frames



Full and half insect screens are available for most window sizes. The half insect screen (shown above) allows ventilation without affecting the view through the upper sash. Frames are available in colors to match product exteriors.

TruScene® Insect Screens

Our TruScene insect screens let in over 25% more fresh air† and provide 50% greater clarity than conventional Andersen insect screens, all while keeping out unwanted small insects.

Conventional Insect Screens

Conventional insect screens have charcoal gray powder-coated aluminum screen mesh.

GRILLES

Grilles are available in a variety of configurations and widths. See page 18 for details.

EXTERIOR TRIM

Available with Andersen exterior trim. See the Exterior Trim section starting on page 177.

CAUTION: Painting and staining may cause damage to rigid vinyl. Andersen does not warrant the adhesion or performance of homeowner-applied paint over vinyl or other factory-coated surfaces. For vinyl painting instructions and preparation, contact your Andersen supplier. Do not paint weatherstrip. Creosote-based stains should not come in contact with Andersen products. Abrasive cleaners or solutions containing corrosive solvents should not be used on Andersen products. See page 223 for a complete list of cautions.

*Infringes on the overall net clear opening. The unit clear operable area may not meet egress requirements. Consult your local building code official for egress requirements in your area.

**Installed energy performance panels and combination units may reduce the overall net clear opening. The unit clear operable area may not meet egress requirements. Consult your local building code official for egress requirements in your area.

†TruScene insect screens let in over 25% more fresh air than standard Andersen fiberglass insect screens.

Dimensions in parentheses are in millimeters.

TILT-WASH DOUBLE-HUNG FULL-FRAME WINDOWS

Table of Sizes for Tilt-Wash Double-Hung Windows

Scale 1/8" (3) = 1'-0" (305) – 1:96

Window Dimension	1'-9 5/8" (549)	2'-1 5/8" (651)	2'-5 5/8" (752)	2'-7 5/8" (803)	2'-9 5/8" (854)	2'-11 5/8" (905)	3'-1 5/8" (956)	3'-5 5/8" (1057)	3'-9 5/8" (1159)
Minimum Rough Opening	1'-10 1/8" (562)	2'-2 1/8" (664)	2'-6 1/8" (765)	2'-8 1/8" (816)	2'-10 1/8" (867)	3'-0 1/8" (917)	3'-2 1/8" (968)	3'-6 1/8" (1070)	3'-10 1/8" (1172)
Unobstructed Glass (lower sash only)	15" (381)	19" (483)	23" (584)	25" (635)	27" (686)	29" (737)	31" (787)	35" (889)	39" (991)

CUSTOM WIDTHS – 21 5/8" to 45 5/8"

CUSTOM HEIGHTS – 36 7/8" to 92 7/8"

3'-0 7/8" (937) / 3'-0 7/8" (937) / 13 15/16" (354)	TW18210	TW20210	TW24210	TW26210	TW28210	TW210210	TW30210	TW34210	TW38210
3'-4 7/8" (1038) / 3'-4 7/8" (1038) / 15 15/16" (405)	TW1832	TW2032	TW2432	TW2632	TW2832	TW21032	TW3032	TW3432	TW3832
3'-8 7/8" (1140) / 3'-8 7/8" (1140) / 17 15/16" (456)	TW1836	TW2036	TW2436	TW2636	TW2836	TW21036	TW3036	TW3436	TW3836
4'-0 7/8" (1241) / 4'-0 7/8" (1241) / 19 7/16" (495)	TW18310	TW20310	TW24310	TW26310	TW28310	TW210310	TW30310	TW34310	TW38310
4'-4 7/8" (1343) / 4'-4 7/8" (1343) / 21 15/16" (557)	TW1842	TW2042	TW2442	TW2642	TW2842	TW21042	TW3042	TW3442	TW3842
4'-8 7/8" (1445) / 4'-8 7/8" (1445) / 23 7/16" (596)	TW1846	TW2046	TW2446	TW2646	TW2846	TW21046	TW3046◊	TW3446◊	TW3846◊
5'-0 7/8" (1546) / 5'-0 7/8" (1546) / 25 15/16" (659)	TW18410	TW20410	TW24410	TW26410	TW28410	TW210410◊	TW30410◊	TW34410◊	TW38410◊
5'-4 7/8" (1648) / 5'-4 7/8" (1648) / 27 15/16" (710)	TW1852	TW2052	TW2452	TW2652	TW2852◊	TW21052◊	TW3052◊	TW3452◊	TW3852◊
5'-8 7/8" (1749) / 5'-8 7/8" (1749) / 29 15/16" (760)	TW1856	TW2056	TW2456	TW2656◊	TW2856◊	TW21056◊	TW3056◊	TW3456◊	TW3856◊
6'-0 7/8" (1851) / 6'-0 7/8" (1851) / 31 15/16" (811)	TW18510	TW20510	TW24510◊	TW26510◊	TW28510◊	TW210510◊	TW30510◊	TW34510◊	TW38510◊
6'-4 7/8" (1953) / 6'-4 7/8" (1953) / 33 15/16" (862)	TW1862	TW2062	TW2462◊	TW2662◊	TW2862◊	TW21062◊	TW3062◊	TW3462◊	TW3862◊

continued on next page

Custom-size windows are available in 1/8" (3) increments. See page 88 for custom sizing. Grille patterns shown on page 89. Details shown on pages 89-90.

Cottage or reverse cottage sash is available for the standard window heights shown below in standard widths.

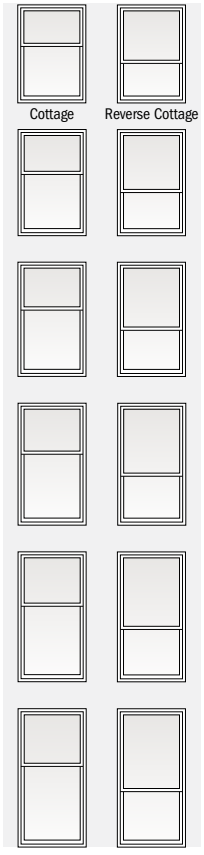

Size tables for windows with cottage or reverse cottage sash are available at **andersenwindows.com/sizing**. See page 88 for custom sizing.

- Window Dimension always refers to outside frame-to-frame dimension.
- **Minimum Rough Opening dimensions may need to be increased to allow for use of building wraps, flashing, sill panning, brackets, fasteners or other items. See pages 222-223 for more details.**
- Dimensions in parentheses are in millimeters.

◊Meets or exceeds clear opening area of 5.7 sq. ft. or 0.53 m², clear opening width of 20" (508) and clear opening height of 24" (610). See tables on pages 86-87.

Table of Sizes for Tilt-Wash Double-Hung Windows *(continued)*

Scale 1/8" (3) = 1'-0" (305) – 1:96

Window Dimension	1'-9 5/8" (549)	2'-1 5/8" (651)	2'-5 5/8" (752)	2'-7 5/8" (803)	2'-9 5/8" (854)	2'-11 5/8" (905)	3'-1 5/8" (956)	3'-5 5/8" (1057)	3'-9 5/8" (1159)
Minimum Rough Opening	1'-10 1/8" (562)	2'-2 1/8" (664)	2'-6 1/8" (765)	2'-8 1/8" (816)	2'-10 1/8" (867)	3'-0 1/8" (917)	3'-2 1/8" (968)	3'-6 1/8" (1070)	3'-10 1/8" (1172)
Unobstructed Glass (lower sash only)	15" (381)	19" (483)	23" (584)	25" (635)	27" (686)	29" (737)	31" (787)	35" (889)	39" (991)

CUSTOM WIDTHS – 21 5/8" to 45 5/8"

CUSTOM HEIGHTS – 36 7/8" to 92 7/8"

7'-4 7/8" (2257) / 7'-4 7/8" (2257) / 39 15/16" (1014)

TW1872 TW2072◊ TW2472◊ TW2672◊ TW2872◊ TW21072◊ TW3072◊ TW3472◊ TW3872◊

7'-8 7/8" (2359) / 7'-8 7/8" (2359) / 41 15/16" (1065)

TW1876 TW2076◊ TW2476◊ TW2676◊ TW2876◊ TW21076◊ TW3076◊ TW3476◊ TW3876◊

- Window Dimension always refers to outside frame-to-frame dimension.
- **Minimum Rough Opening dimensions may need to be increased to allow for use of building wraps, flashing, sill panning, brackets, fasteners or other items. See pages 222-223 for more details.**
- Dimensions in parentheses are in millimeters.

◊Meets or exceeds clear opening area of 5.7 sq. ft. or 0.53 m², clear opening width of 20" (508) and clear opening height of 24" (610). See tables on pages 86-87.

Custom-size windows are available in 1/8" (3) increments. See page 88 for custom sizing.

Windows 7'-4 7/8" (2257) and 7'-8 7/8" (2359) in height have interior and exterior brackets. Interior brackets, located on both sides of the meeting rail, must be flipped up for proper product performance. Andersen® reinforced joining material must be used when joining windows 7'-4 7/8" (2257) and 7'-8 7/8" (2359) in height in vertical (ribbon) combinations. Grille patterns shown on page 89. Details shown on pages 89-90.

Area Specifications for Tilt-Wash Transom Windows

Window Number	Glass Area Sq. Ft./(m²)	Overall Window Area Sq. Ft./(m²)
TWT1810	0.56 (0.05)	1.80 (0.17)
TWT1815	1.32 (0.12)	2.90 (0.27)
TWT1817	1.52 (0.14)	3.20 (0.30)
TWT18111	1.94 (0.18)	3.80 (0.35)
TWT1821	2.15 (0.20)	4.10 (0.38)
TWT1823	2.35 (0.22)	4.40 (0.41)
TWT1827	2.77 (0.26)	5.00 (0.47)
TWT1831	3.39 (0.32)	5.90 (0.55)
TWT2010	0.70 (0.07)	2.14 (0.20)
TWT2015	1.67 (0.16)	3.44 (0.32)
TWT2017	1.93 (0.18)	3.79 (0.35)
TWT20111	2.46 (0.23)	4.50 (0.42)
TWT2021	2.72 (0.25)	4.86 (0.45)
TWT2023	2.98 (0.28)	5.22 (0.49)
TWT2027	3.51 (0.33)	5.93 (0.55)
TWT2031	4.30 (0.40)	7.00 (0.65)
TWT2410	0.85 (0.08)	2.47 (0.23)
TWT2415	2.02 (0.19)	3.97 (0.37)
TWT2417	2.34 (0.22)	4.38 (0.41)
TWT24111	2.98 (0.28)	5.21 (0.48)
TWT2421	3.29 (0.31)	5.62 (0.52)
TWT2423	3.61 (0.34)	6.03 (0.56)
TWT2427	4.25 (0.40)	6.85 (0.64)
TWT2431	5.21 (0.48)	8.09 (0.75)
TWT2610	0.93 (0.09)	2.64 (0.25)
TWT2615	2.19 (0.20)	4.24 (0.39)
TWT2617	2.54 (0.24)	4.68 (0.44)

Window Number	Glass Area Sq. Ft./(m²)	Overall Window Area Sq. Ft./(m²)
TWT26111	3.23 (0.30)	5.56 (0.52)
TWT2621	3.58 (0.33)	6.00 (0.56)
TWT2623	3.93 (0.37)	6.44 (0.60)
TWT2627	4.62 (0.43)	7.32 (0.68)
TWT2631	5.66 (0.53)	8.63 (0.80)
TWT2810	1.00 (0.09)	2.80 (0.26)
TWT2815	2.37 (0.22)	4.51 (0.42)
TWT2817	2.74 (0.26)	4.98 (0.46)
TWT28111	3.49 (0.32)	5.91 (0.55)
TWT2821	3.87 (0.36)	6.38 (0.59)
TWT2823	4.24 (0.39)	6.84 (0.64)
TWT2827	4.99 (0.46)	7.78 (0.72)
TWT2831	6.12 (0.57)	9.18 (0.85)
TWT21010	1.07 (0.10)	2.97 (0.28)
TWT21015	2.55 (0.24)	4.78 (0.44)
TWT21017	2.95 (0.27)	5.27 (0.49)
TWT210111	3.75 (0.35)	6.26 (0.58)
TWT21021	4.15 (0.39)	6.76 (0.63)
TWT21023	4.56 (0.42)	7.25 (0.67)
TWT21027	5.36 (0.50)	8.24 (0.77)
TWT21031	6.57 (0.61)	9.73 (0.90)
TWT3010	1.15 (0.11)	3.14 (0.29)
TWT3015	2.72 (0.25)	5.05 (0.47)
TWT3017	3.15 (0.29)	5.57 (0.52)
TWT30111	4.01 (0.37)	6.61 (0.61)
TWT3021	4.44 (0.41)	7.14 (0.66)
TWT3023	4.87 (0.45)	7.66 (0.71)

Window Number	Glass Area Sq. Ft./(m²)	Overall Window Area Sq. Ft./(m²)
TWT3027	5.73 (0.53)	8.70 (0.81)
TWT3031	7.02 (0.65)	10.27 (0.95)
TWT3410	1.30 (0.12)	3.47 (0.32)
TWT3415	3.07 (0.29)	5.58 (0.52)
TWT3417	3.56 (0.33)	6.16 (0.57)
TWT34111	4.53 (0.42)	7.32 (0.68)
TWT3421	5.02 (0.47)	7.89 (0.73)
TWT3423	5.50 (0.51)	8.47 (0.79)
TWT3427	6.47 (0.60)	9.63 (0.90)
TWT3431	7.93 (0.74)	11.36 (1.06)
TWT3810	1.45 (0.14)	3.80 (0.35)
TWT3815	3.42 (0.32)	6.12 (0.57)
TWT3817	3.97 (0.37)	6.75 (0.63)
TWT38111	5.05 (0.47)	8.02 (0.75)
TWT3821	5.59 (0.52)	8.65 (0.80)
TWT3823	6.13 (0.57)	9.29 (0.86)
TWT3827	7.21 (0.67)	10.55 (0.98)
TWT3831	8.84 (0.82)	12.46 (1.16)
TWT31010	1.51 (0.14)	3.94 (0.37)
TWT4210	1.66 (0.15)	4.28 (0.40)
TWT41010	1.95 (0.18)	4.94 (0.46)
TWT5610	2.25 (0.21)	5.61 (0.52)
TWT6210	2.55 (0.24)	6.28 (0.58)

- Dimensions in parentheses are in square meters.

TILT-WASH DOUBLE-HUNG FULL-FRAME WINDOWS

Table of Sizes for Tilt-Wash Transom Windows

Scale 1/8" = 1'-0" (1:96)

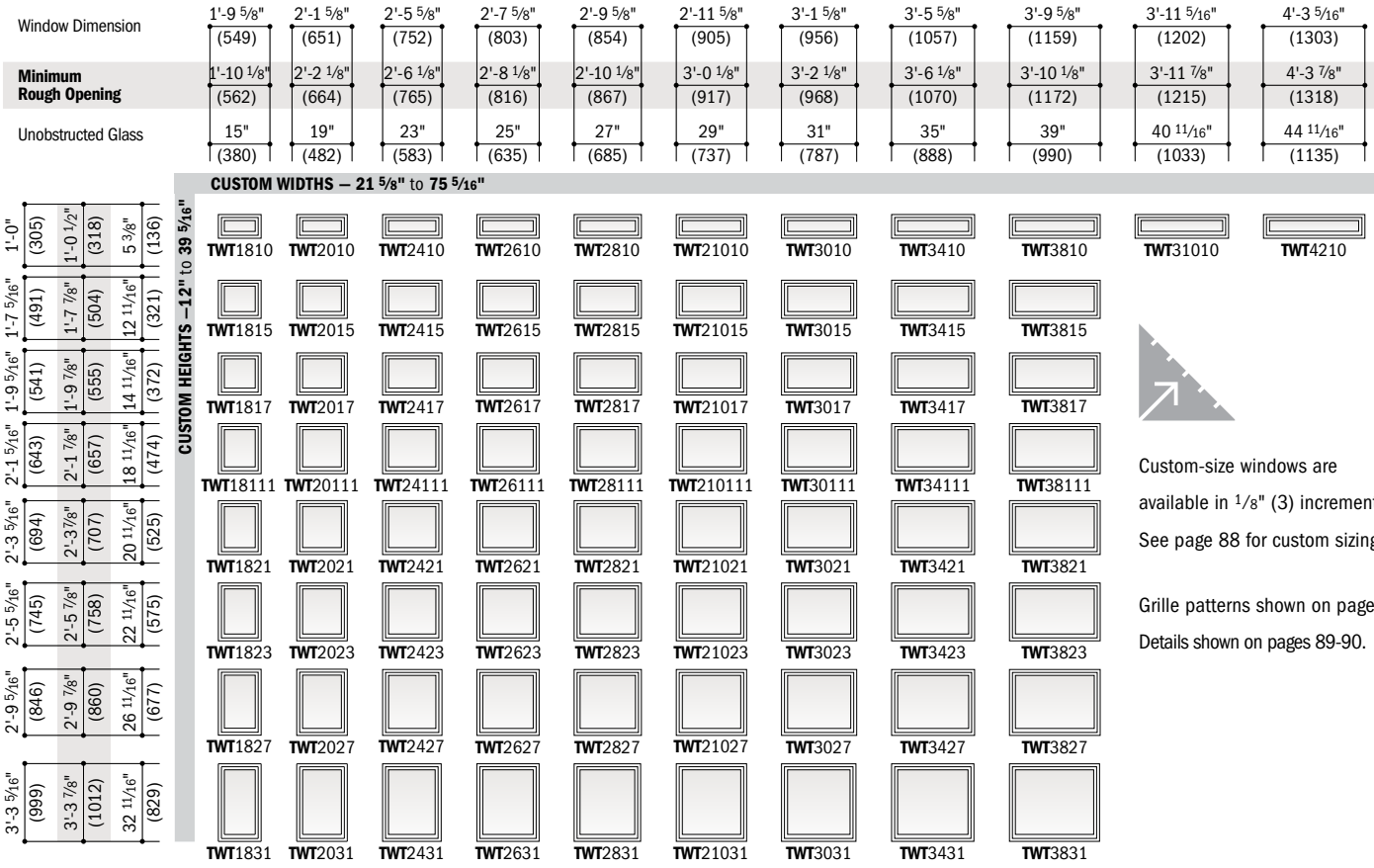

Custom-size windows are available in 1/8" (3) increments. See page 88 for custom sizing.

Grille patterns shown on page 89.

Details shown on pages 89-90.

- Window Dimension always refers to outside frame-to-frame dimension.
- **Minimum Rough Opening dimensions may need to be increased to allow for use of building wraps, flashing, sill panning, brackets, fasteners or other items. See pages 222-223 for more details.**
- Dimensions in parentheses are in millimeters.

Area Specifications for Tilt-Wash Picture Windows

Window Number	Glass Area Sq. Ft./(m²)		Overall Window Area Sq. Ft./(m²)	
DHP10310	2.03	(0.19)	4.07	(0.38)
DHP1042	2.22	(0.21)	4.41	(0.41)
DHP1046	2.42	(0.23)	4.74	(0.44)
DHP10410	2.61	(0.24)	5.07	(0.47)
DHP1052	2.81	(0.26)	5.41	(0.50)
DHP1056	3.01	(0.28)	5.74	(0.53)
DHP10510	3.20	(0.30)	6.07	(0.56)
DHP1062	3.40	(0.32)	6.41	(0.60)
DHP30310	9.38	(0.87)	12.77	(1.19)
DHP3042	10.29	(0.96)	13.82	(1.28)
DHP3046	11.19	(1.04)	14.86	(1.38)
DHP30410	12.10	(1.12)	15.91	(1.48)
DHP3052	13.01	(1.21)	16.95	(1.58)
DHP3056	13.92	(1.29)	18.00	(1.67)
DHP30510	14.83	(1.38)	19.04	(1.77)
DHP3062	15.73	(1.46)	20.09	(1.87)
DHP34310	10.53	(0.98)	14.13	(1.31)
DHP3442	11.54	(1.07)	15.28	(1.42)
DHP3446	12.56	(1.17)	16.44	(1.53)

Window Number	Glass Area Sq. Ft./(m²)		Overall Window Area Sq. Ft./(m²)	
DHP34410	13.58	(1.26)	17.60	(1.64)
DHP3452	14.60	(1.36)	18.75	(1.74)
DHP3456	15.62	(1.45)	19.91	(1.85)
DHP34510	16.64	(1.55)	21.07	(1.96)
DHP3462	17.66	(1.64)	22.22	(2.06)
DHP310310	12.16	(1.13)	16.06	(1.49)
DHP31042	13.33	(1.24)	17.37	(1.61)
DHP31046	14.51	(1.35)	18.69	(1.74)
DHP310410	15.69	(1.46)	20.00	(1.86)
DHP31052	16.87	(1.57)	21.32	(1.98)
DHP31056	18.04	(1.68)	22.63	(2.10)
DHP310510	19.22	(1.79)	23.94	(2.22)
DHP31062	20.40	(1.90)	25.26	(2.35)
DHP42310	13.30	(1.24)	17.42	(1.62)
DHP4242	14.56	(1.35)	18.83	(1.75)
DHP4246	15.88	(1.48)	20.27	(1.88)
DHP42410	17.17	(1.60)	21.69	(2.02)
DHP4252	18.46	(1.72)	23.12	(2.15)
DHP4256	19.75	(1.84)	24.54	(2.28)

Window Number	Glass Area Sq. Ft./(m²)		Overall Window Area Sq. Ft./(m²)	
DHP42510	21.03	(1.95)	25.97	(2.41)
DHP4262	22.32	(2.07)	27.39	(2.55)
DHP410310	15.60	(1.45)	20.13	(1.87)
DHP41042	17.11	(1.59)	21.78	(2.02)
DHP41046	18.62	(1.73)	23.43	(2.18)
DHP410410	20.13	(1.87)	25.07	(2.33)
DHP41052	21.64	(2.01)	26.72	(2.48)
DHP41056	23.15	(2.15)	28.37	(2.64)
DHP410510	24.66	(2.29)	30.02	(2.79)
DHP41062	26.17	(2.43)	31.66	(2.94)
DHP56310	17.89	(1.66)	22.85	(2.12)
DHP5642	19.63	(1.82)	24.72	(2.30)
DHP5646	21.36	(1.98)	26.59	(2.47)
DHP56410	23.09	(2.15)	28.46	(2.64)
DHP5652	24.83	(2.31)	30.33	(2.82)
DHP5656	26.56	(2.47)	32.20	(2.99)
DHP56510	28.29	(2.63)	34.07	(3.17)
DHP5662	30.02	(2.79)	35.93	(3.34)

- Dimensions in parentheses are in square meters.

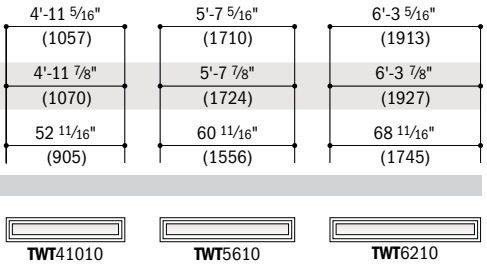

Table of Sizes for Tilt-Wash Picture Windows

Scale 1/8" (3) = 1'-0" (305) – 1:96

Window Dimension	1'-0" (305)	3'-1 5/8" (956)	3'-5 5/8" (1057)	3'-11 5/16" (1202)	4'-3 5/16" (1303)	4'-11 5/16" (1507)	5'-7 5/16" (1710)
Minimum Rough Opening	1'-0 1/2" (318)	3'-2 1/8" (968)	3'-6 1/8" (1070)	3'-11 7/8" (1216)	4'-3 7/8" (1318)	4'-11 7/8" (1521)	5'-7 7/8" (1724)
Unobstructed Glass	7 1/16" (179)	32 11/16" (830)	36 11/16" (932)	42 3/8" (1076)	46 3/8" (1178)	54 3/8" (1381)	62 3/8" (1584)

4'-0 7/8" (1241) × 4'-0 7/8" (1241) / 41 5/16" (1049)	**DHP**10310	**DHP**30310	**DHP**34310	**DHP**310310	**DHP**42310	**DHP**410310	**DHP**56310
4'-4 7/8" (1343) × 4'-4 7/8" (1343) / 45 5/16" (1151)	**DHP**1042	**DHP**3042	**DHP**3442	**DHP**31042	**DHP**4242	**DHP**41042	**DHP**5642
4'-8 7/8" (1445) × 4'-8 7/8" (1445) / 49 5/16" (1253)	**DHP**1046	**DHP**3046	**DHP**3446	**DHP**31046	**DHP**4246	**DHP**41046	**DHP**5646
5'-0 7/8" (1547) × 5'-0 7/8" (1547) / 53 5/16" (1355)	**DHP**10410	**DHP**30410	**DHP**34410	**DHP**310410	**DHP**42410	**DHP**410410	**DHP**56410
5'-4 7/8" (1648) × 5'-4 7/8" (1648) / 57 5/16" (1456)	**DHP**1052	**DHP**3052	**DHP**3452	**DHP**31052	**DHP**4252	**DHP**41052	**DHP**5652
5'-8 7/8" (1749) × 5'-8 7/8" (1749) / 61 5/16" (1557)	**DHP**1056	**DHP**3056	**DHP**3456	**DHP**31056	**DHP**4256	**DHP**41056	**DHP**5656
6'-0 7/8" (1851) × 6'-0 7/8" (1851) / 65 5/16" (1659)	**DHP**10510	**DHP**30510	**DHP**34510	**DHP**310510	**DHP**42510	**DHP**410510	**DHP**56510
6'-4 7/8" (1953) × 6'-4 7/8" (1953) / 69 5/16" (1761)	**DHP**1062	**DHP**3062	**DHP**3462	**DHP**31062	**DHP**4262	**DHP**41062	**DHP**5662

Custom-size windows are available in 1/8" (3) increments. See page 88 for custom sizing.

Grille patterns shown on page 89.
Details shown on pages 89-90.

- Window Dimension always refers to outside frame-to-frame dimension.
- **Minimum Rough Opening dimensions may need to be increased to allow for use of building wraps, flashing, sill panning, brackets, fasteners or other items. See pages 222-223 for more details.**
- Dimensions in parentheses are in millimeters.

Opening and Area Specifications for Tilt-Wash Double-Hung Windows

Window Number	Clear Opening Area Sq. Ft./(m²)	Clear Opening in Full Open Position Width Inches/(mm)	Clear Opening in Full Open Position Height Inches/(mm)	Glass Area Sq. Ft./(m²)	Vent Area Sq. Ft./(m²)	Top of Subfloor to Top of Inside Sill Stop Inches/(mm)	Overall Window Area Sq. Ft./(m²)
TW18210	1.72 (0.16)	17 7/8" (455)	13 3/4" (350)	2.91 (0.27)	1.70 (0.84)	49 5/32" (1249)	5.53 (0.51)
TW1832	1.96 (0.18)	17 7/8" (455)	15 3/4" (401)	3.32 (0.31)	1.95 (0.82)	45 5/32" (1147)	6.14 (0.57)
TW1836	2.21 (0.21)	17 7/8" (455)	17 3/4" (452)	3.74 (0.35)	2.20 (0.80)	41 5/32" (1046)	6.74 (0.63)
TW18310	2.46 (0.23)	17 7/8" (455)	19 3/4" (503)	4.15 (0.39)	2.45 (0.77)	37 5/32" (944)	7.34 (0.68)
TW1842	2.71 (0.25)	17 7/8" (455)	21 3/4" (553)	4.57 (0.42)	2.70 (0.75)	33 5/32" (843)	7.94 (0.74)
TW1846	3.02 (0.28)	17 7/8" (455)	24 1/4" (617)	4.99 (0.46)	2.98 (0.72)	29 5/32" (741)	8.54 (0.79)
TW18410	3.21 (0.30)	17 7/8" (455)	25 3/4" (655)	5.40 (0.50)	3.20 (0.70)	25 5/32" (639)	9.14 (0.85)
TW1852	3.46 (0.32)	17 7/8" (455)	27 3/4" (706)	5.82 (0.54)	3.44 (0.68)	21 5/32" (538)	9.74 (0.90)
TW1856	3.71 (0.34)	17 7/8" (455)	29 3/4" (757)	6.23 (0.58)	3.69 (0.66)	17 5/32" (436)	10.34 (0.96)
TW18510	3.96 (0.37)	17 7/8" (455)	31 3/4" (807)	6.65 (0.62)	3.94 (0.63)	13 5/32" (335)	10.94 (1.02)
TW1862	4.08 (0.38)	17 7/8" (455)	32 11/16" (832)	7.06 (0.66)	4.19 (0.61)	9 5/32" (233)	11.54 (1.07)
TW1872	4.95 (0.46)	17 7/8" (455)	39 3/4" (1011)	8.31 (0.77)	4.94 (0.54)	10 21/32"* (271)*	13.34 (1.24)
TW1876	5.20 (0.48)	17 7/8" (455)	41 3/4" (1061)	8.73 (0.81)	5.19 (0.52)	6 21/32"* (169)*	13.94 (1.30)
TW20210	2.10 (0.19)	21 7/8" (557)	13 3/4" (350)	3.68 (0.34)	2.08 (0.81)	49 5/32" (1249)	6.56 (0.61)
TW2032	2.40 (0.22)	21 7/8" (557)	15 3/4" (401)	4.21 (0.39)	2.39 (0.78)	45 5/32" (1147)	7.27 (0.68)
TW2036	2.71 (0.25)	21 7/8" (557)	17 3/4" (452)	4.74 (0.44)	2.69 (0.75)	41 5/32" (1046)	7.98 (0.74)
TW20310	3.01 (0.28)	21 7/8" (557)	19 3/4" (503)	5.26 (0.49)	3.00 (0.72)	37 5/32" (944)	8.69 (0.81)
TW2042	3.32 (0.31)	21 7/8" (557)	21 3/4" (553)	5.79 (0.54)	3.30 (0.69)	33 5/32" (843)	9.41 (0.87)
TW2046	3.70 (0.34)	21 7/8" (557)	24 1/4" (617)	6.32 (0.59)	3.65 (0.66)	29 5/32" (741)	10.12 (0.94)
TW20410	3.93 (0.36)	21 7/8" (557)	25 3/4" (655)	6.84 (0.64)	3.91 (0.64)	25 5/32" (639)	10.83 (1.01)
TW2052	4.23 (0.39)	21 7/8" (557)	27 3/4" (706)	7.37 (0.68)	4.21 (0.61)	21 5/32" (538)	11.54 (1.07)
TW2056	4.53 (0.42)	21 7/8" (557)	29 3/4" (757)	7.90 (0.73)	4.52 (0.58)	17 5/32" (436)	12.25 (1.14)
TW20510	4.84 (0.45)	21 7/8" (557)	31 3/4" (807)	8.42 (0.78)	4.82 (0.55)	13 5/32" (335)	12.96 (1.20)
TW2062	4.99 (0.46)	21 7/8" (557)	32 11/16" (832)	8.95 (0.83)	5.13 (0.52)	9 5/32" (233)	13.68 (1.27)
TW2072 ◊	6.06 (0.56)	21 7/8" (557)	39 3/4" (1011)	10.53 (0.98)	6.04 (0.44)	10 21/32"* (271)*	15.81 (1.47)
TW2076 ◊	6.36 (0.59)	21 7/8" (557)	41 3/4" (1061)	11.06 (1.03)	6.34 (0.41)	6 21/32"* (169*	16.52 (1.54)
TW24210	2.48 (0.23)	25 7/8" (658)	13 3/4" (350)	4.46 (0.41)	2.46 (0.77)	49 5/32" (1249)	7.58 (0.70)
TW2432	2.84 (0.26)	25 7/8" (658)	15 3/4" (401)	5.10 (0.47)	2.82 (0.74)	45 5/32" (1147)	8.40 (0.78)
TW2436	3.20 (0.30)	25 7/8" (658)	17 3/4" (452)	5.74 (0.53)	3.18 (0.70)	41 5/32" (1046)	9.23 (0.86)
TW24310	3.56 (0.33)	25 7/8" (658)	19 3/4" (503)	6.37 (0.59)	3.54 (0.67)	37 5/32" (944)	10.05 (0.93)
TW2442	3.92 (0.36)	25 7/8" (658)	21 3/4" (553)	7.01 (0.65)	3.90 (0.64)	33 5/32" (843)	10.87 (1.01)
TW2446	4.37 (0.41)	25 7/8" (658)	24 1/4" (617)	7.65 (0.71)	4.31 (0.60)	29 5/32" (741)	11.70 (1.09)
TW24410	4.64 (0.43)	25 7/8" (658)	25 3/4" (655)	8.29 (0.77)	4.62 (0.57)	25 5/32" (639)	12.52 (1.16)
TW2452	5.00 (0.46)	25 7/8" (658)	27 3/4" (706)	8.93 (0.83)	4.98 (0.54)	21 5/32" (538)	13.34 (1.24)
TW2456	5.36 (0.50)	25 7/8" (658)	29 3/4" (757)	9.56 (0.89)	5.34 (0.50)	17 5/32" (436)	14.17 (1.32)
TW24510 ◊	5.72 (0.53)	25 7/8" (658)	31 3/4" (807)	10.20 (0.95)	5.70 (0.47)	13 5/32" (335)	14.99 (1.39)
TW2462 ◊	5.89 (0.55)	25 7/8" (658)	32 11/16" (832)	10.84 (1.01)	6.06 (0.44)	9 5/32" (233)	15.81 (1.47)
TW2472 ◊	7.16 (0.67)	25 7/8" (658)	39 3/4" (1011)	12.75 (1.18)	7.14 (0.34)	10 21/32"* (271)*	18.28 (1.70)
TW2476 ◊	7.52 (0.70)	25 7/8" (658)	41 3/4" (1061)	13.39 (1.24)	7.50 (0.30)	6 21/32"* (169)*	19.10 (1.77)
TW26210	2.67 (0.25)	27 7/8" (709)	13 3/4" (350)	4.85 (0.45)	2.65 (0.75)	49 5/32" (1249)	8.09 (0.75)
TW2632	3.06 (0.28)	27 7/8" (709)	15 3/4" (401)	5.54 (0.51)	3.04 (0.72)	45 5/32" (1147)	8.97 (0.83)
TW2636	3.45 (0.32)	27 7/8" (709)	17 3/4" (452)	6.24 (0.58)	3.43 (0.68)	41 5/32" (1046)	9.85 (0.92)
TW26310	3.84 (0.36)	27 7/8" (709)	19 3/4" (503)	6.93 (0.64)	3.81 (0.65)	37 5/32" (944)	10.73 (1.00)
TW2642	4.22 (0.39)	27 7/8" (709)	21 3/4" (553)	7.62 (0.71)	4.20 (0.61)	33 5/32" (843)	11.61 (1.08)
TW2646	4.71 (0.44)	27 7/8" (709)	24 1/4" (617)	8.32 (0.77)	4.65 (0.57)	29 5/32" (741)	12.49 (1.16)
TW26410	5.00 (0.46)	27 7/8" (709)	25 3/4" (655)	9.01 (0.84)	4.98 (0.54)	25 5/32" (639)	13.36 (1.24)
TW2652	5.39 (0.50)	27 7/8" (709)	27 3/4" (706)	9.70 (0.90)	5.37 (0.50)	21 5/32" (538)	14.24 (1.32)
TW2656 ◊	5.78 (0.54)	27 7/8" (709)	29 3/4" (757)	10.40 (0.97)	5.75 (0.47)	17 5/32" (436)	15.12 (1.40)
TW26510 ◊	6.16 (0.57)	27 7/8" (709)	31 3/4" (807)	11.09 (1.03)	6.14 (0.43)	13 5/32" (335)	16.00 (1.49)
TW2662 ◊	6.35 (0.59)	27 7/8" (709)	32 11/16" (832)	11.78 (1.09)	6.53 (0.39)	9 5/32" (233)	16.88 (1.57)
TW2672 ◊	7.71 (0.72)	27 7/8" (709)	39 3/4" (1011)	13.86 (1.29)	7.69 (0.29)	10 21/32"* (271)*	19.51 (1.81)
TW2676 ◊	8.10 (0.75)	27 7/8" (709)	41 3/4" (1061)	14.56 (1.35)	8.08 (0.25)	6 21/32"* (169)*	20.39 (1.89)
TW28210	2.86 (0.27)	29 7/8" (760)	13 3/4" (350)	5.24 (0.49)	2.84 (0.74)	49 5/32" (1249)	8.61 (0.80)
TW2832	3.28 (0.30)	29 7/8" (760)	15 3/4" (401)	5.99 (0.56)	3.26 (0.70)	45 5/32" (1147)	9.54 (0.89)
TW2836	3.70 (0.34)	29 7/8" (760)	17 3/4" (452)	6.73 (0.63)	3.67 (0.66)	41 5/32" (1046)	10.47 (0.97)
TW28310	4.11 (0.38)	29 7/8" (760)	19 3/4" (503)	7.48 (0.70)	4.09 (0.62)	37 5/32" (944)	11.41 (1.06)
TW2842	4.53 (0.42)	29 7/8" (760)	21 3/4" (553)	8.23 (0.76)	4.50 (0.58)	33 5/32" (843)	12.34 (1.15)
TW2846	5.05 (0.47)	29 7/8" (760)	24 1/4" (617)	8.98 (0.83)	4.98 (0.54)	29 5/32" (741)	13.28 (1.23)
TW28410	5.36 (0.50)	29 7/8" (760)	25 3/4" (655)	9.73 (0.90)	5.33 (0.50)	25 5/32" (639)	14.21 (1.32)
TW2852 ◊	5.77 (0.54)	29 7/8" (760)	27 3/4" (706)	10.48 (0.97)	5.75 (0.47)	21 5/32" (538)	15.14 (1.41)

continued on next page

Opening calculations change when using PG Upgrade sill stop. Contact your Andersen supplier for more information.

For cottage and reverse cottage sash opening specifications, visit **andersenwindows.com/openingspecs**.

• Top of Subfloor to Top of Inside Sill Stop is calculated based upon a structural header height of 6'-10 1/2" (2096) except for 7'-5" (2261) and 7'-9" (2362) heights which are calculated using a header height of 8' (2438).
• Dimensions in parentheses are in millimeters or square meters.
◊Meets or exceeds clear opening area of 5.7 sq. ft. or 0.53 m², clear opening width of 20" (508) and clear opening height of 24" (610).
*Calculated based upon a structural header height of 8' (2438).

Opening and Area Specifications for Tilt-Wash Double-Hung Windows *(continued)*

Window Number	Clear Opening Area Sq. Ft./(m²)	Clear Opening in Full Open Position Width Inches/(mm)	Clear Opening in Full Open Position Height Inches/(mm)	Glass Area Sq. Ft./(m²)	Vent Area Sq. Ft./(m²)	Top of Subfloor to Top of Inside Sill Stop Inches/(mm)	Overall Window Area Sq. Ft./(m²)
TW2856 ◊	6.19 (0.57)	29 7/8" (760)	29 3/4" (757)	11.23 (1.04)	6.17 (0.43)	17 5/32" (436)	16.08 (1.49)
TW28510 ◊	6.60 (0.61)	29 7/8" (760)	31 3/4" (807)	11.98 (1.11)	6.58 (0.39)	13 5/32" (335)	17.01 (1.58)
TW2862 ◊	6.80 (0.63)	29 7/8" (760)	32 11/16" (832)	12.73 (1.18)	7.00 (0.35)	9 5/32" (233)	17.95 (1.67)
TW2872 ◊	8.27 (0.77)	29 7/8" (760)	39 3/4" (1011)	14.97 (1.39)	8.24 (0.23)	10 21/32"* (271)*	20.75 (1.93)
TW2876 ◊	8.68 (0.81)	29 7/8" (760)	41 3/4" (1061)	15.72 (1.46)	8.66 (0.20)	6 21/32"* (169)*	21.68 (2.01)
TW210210	3.06 (0.28)	31 7/8" (811)	13 3/4" (350)	5.62 (0.52)	3.03 (0.72)	49 5/32" (1249)	9.12 (0.85)
TW21032	3.50 (0.33)	31 7/8" (811)	15 3/4" (401)	6.43 (0.60)	3.47 (0.68)	45 5/32" (1147)	10.11 (0.94)
TW21036	3.94 (0.37)	31 7/8" (811)	17 3/4" (452)	7.23 (0.67)	3.92 (0.64)	41 5/32" (1046)	11.10 (1.03)
TW210310	4.39 (0.41)	31 7/8" (811)	19. 3/4" (503)	8.04 (0.75)	4.36 (0.59)	37 5/32" (944)	12.09 (1.12)
TW21042	4.83 (0.45)	31 7/8" (811)	21 3/4" (553)	8.84 (0.82)	4.80 (0.55)	33 5/32" (843)	13.08 (1.21)
TW21046	5.38 (0.50)	31 7/8" (811)	24 1/4" (617)	9.65 (0.90)	5.31 (0.51)	29 5/32" (741)	14.07 (1.31)
TW210410 ◊	5.72 (0.53)	31 7/8" (811)	25 3/4" (655)	10.45 (0.97)	5.69 (0.47)	25 5/32" (639)	15.05 (1.40)
TW21052 ◊	6.16 (0.57)	31 7/8" (811)	27 3/4" (706)	11.26 (1.05)	6.13 (0.43)	21 5/32" (538)	16.04 (1.49)
TW21056 ◊	6.60 (0.61)	31 7/8" (811)	29 3/4" (757)	12.06 (1.12)	6.58 (0.39)	17 5/32" (436)	17.03 (1.58)
TW210510 ◊	7.05 (0.65)	31 7/8" (811)	31 3/4" (807)	12.87 (1.20)	7.02 (0.35)	13 5/32" (335)	18.02 (1.67)
TW21062 ◊	7.26 (0.67)	31 7/8" (811)	32 11/16" (832)	13.67 (1.27)	7.46 (0.31)	9 5/32" (233)	19.01 (1.77)
TW21072 ◊	8.82 (0.82)	31 7/8" (811)	39 3/4" (1011)	16.09 (1.49)	8.79 (0.18)	10 21/32"* (271)*	21.98 (2.04)
TW21076 ◊	9.26 (0.86)	31 7/8" (811)	41 3/4" (1061)	16.89 (1.57)	9.24 (0.14)	6 21/32"* (169)*	22.97 (2.13)
TW30210	3.25 (0.30)	33 7/8" (862)	13 3/4" (350)	6.01 (0.56)	3.22 (0.70)	49 5/32" (1249)	9.63 (0.89)
TW3032	3.72 (0.35)	33 7/8" (862)	15 3/4" (401)	6.87 (0.64)	3.69 (0.66)	45 5/32" (1147)	10.67 (0.99)
TW3036	4.19 (0.39)	33 7/8" (862)	17 3/4" (452)	7.73 (0.72)	4.16 (0.61)	41 5/32"7 (1046)	11.72 (1.09)
TW30310	4.66 (0.43)	33 7/8" (862)	19 3/4" (503)	8.59 (0.80)	4.63 (0.57)	37 5/32" (944)	12.76 (1.19)
TW3042	5.13 (0.48)	33 7/8" (862)	21 3/4" (553)	9.45 (0.88)	5.11 (0.53)	33 5/32" (843)	13.81 (1.28)
TW3046 ◊	5.72 (0.53)	33 7/8" (862)	24 1/4" (617)	10.31 (0.96)	5.65 (0.48)	29 5/32" (741)	14.85 (1.38)
TW30410 ◊	6.07 (0.56)	33 7/8" (862)	25 3/4" (655)	11.17 (1.04)	6.05 (0.44)	25 5/32" (639)	15.90 (1.48)
TW3052 ◊	6.55 (0.61)	33 7/8" (862)	27 3/4" (706)	12.03 (1.12)	6.52 (0.39)	21 5/32" (538)	16.95 (1.57)
TW3056 ◊	7.02 (0.65)	33 7/8" (862)	29 3/4" (757)	12.89 (1.20)	6.99 (0.35)	17 5/32" (436)	17.99 (1.67)
TW30510 ◊	7.49 (0.70)	33 7/8" (862)	31 3/4" (807)	13.75 (1.28)	7.46 (0.31)	13 5/32" (335)	19.04 (1.77)
TW3062 ◊	7.71 (0.72)	33 7/8" (862)	32 11/16" (832)	14.62 (1.36)	7.93 (0.26)	9 5/32" (233)	20.08 (1.87)
TW3072 ◊	9.37 (0.87)	33 7/8" (862)	39 3/4" (1011)	17.20 (1.60)	9.35 (0.13)	10 21/32"* (271)*	23.22 (2.16)
TW3076 ◊	9.84 (0.91)	33 7/8" (862)	41 3/4" (1061)	18.06 (1.68)	9.82 (0.09)	6 21/32"* (169)*	24.26 (2.25)
TW34210	3.63 (0.34)	37 7/8" (963)	13 3/4" (350)	6.79 (0.63)	3.60 (0.67)	49 5/32" (1249)	10.65 (0.99)
TW3432	4.16 (0.39)	37 7/8" (963)	15 3/4" (401)	7.76 (0.72)	4.13 (0.62)	45 5/32" (1147)	11.81 (1.10)
TW3436	4.68 (0.44)	37 7/8" (963)	17 3/4" (452)	8.73 (0.81)	4.65 (0.57)	41 5/32" (1046)	12.97 (1.20)
TW34310	5.21 (0.48)	37 7/8" (963)	19 3/4" (503)	9.70 (0.90)	5.18 (0.52)	37 5/32" (944)	14.12 (1.31)
TW3442	5.74 (0.53)	37 7/8" (963)	21 3/4" (553)	10.67 (0.99)	5.71 (0.47)	33 5/32" (843)	15.28 (1.42)
TW3446 ◊	6.40 (0.59)	37 7/8" (963)	24 1/4" (617)	11.65 (1.08)	6.31 (0.41)	29 5/32" (741)	16.43 (1.53)
TW34410 ◊	6.79 (0.63)	37 7/8" (963)	25 3/4" (655)	12.62 (1.17)	6.76 (0.37)	25 5/32" (639)	17.59 (1.63)
TW3452 ◊	7.32 (0.68)	37 7/8" (963)	27 3/4" (706)	13.59 (1.26)	7.29 (0.32)	21 5/32" (538)	18.75 (1.74)
TW3456 ◊	7.84 (0.73)	37 7/8" (963)	29 3/4" (757)	14.56 (1.35)	7.81 (0.27)	17 5/32" (436)	19.90 (1.85)
TW34510 ◊	8.37 (0.78)	37 7/8" (963)	31 3/4" (807)	15.53 (1.44)	8.34 (0.23)	13 5/32" (335)	21.06 (1.96)
TW3462 ◊	8.62 (0.80)	37 7/8" (963)	32 11/16" (832)	16.50 (1.53)	8.87 (0.18)	9 5/32" (233)	22.22 (2.06)
TW3472 ◊	10.48 (0.97)	37 7/8" (963)	39 3/4" (1011)	19.42 (1.80)	10.45 (0.03)	10 21/32"* (271)*	25.68 (2.39)
TW3476 ◊	11.00 (1.02)	37 7/8" (963)	41 3/4" (1061)	20.39 (1.89)	10.97 0.02	6 21/32"* (169)*	26.84 (2.49)
TW38210	4.01 (0.37)	41 7/8" (1065)	13 3/4" (350)	7.57 (0.70)	3.98 (0.63)	49 5/32" (1249)	11.68 (1.08)
TW3832	4.60 (0.43)	41 7/8" (1065)	15 3/4" (401)	8.65 (0.80)	4.56 (0.58)	45 5/32" (1147)	12.94 (1.20)
TW3836	5.18 (0.48)	41 7/8" (1065)	17 3/4" (452)	9.73 (0.90)	5.15 (0.52)	41 5/32" (1046)	14.21 (1.32)
TW38310	5.76 (0.54)	41 7/8" (1065)	19 3/4" (503)	10.81 (1.00)	5.73 (0.47)	37 5/32" (944)	15.48 (1.44)
TW3842	6.34 (0.59)	41 7/8" (1065)	21 3/4" (553)	11.90 (1.11)	6.31 (0.41)	33 5/32" (843)	16.75 (1.56)
TW3846 ◊	7.07 (0.66)	41 7/8" (1065)	24 1/4" (617)	12.98 (1.21)	6.98 (0.35)	29 5/32" (741)	18.01 (1.67)
TW38410 ◊	7.51 (0.70)	41 7/8" (1065)	25 3/4" (655)	14.06 (1.31)	7.47 (0.31)	25 5/32" (639)	19.28 (1.79)
TW3852 ◊	8.09 (0.75)	41 7/8" (1065)	27 3/4" (706)	15.14 (1.41)	8.06 (0.25)	21 5/32" (538)	20.55 (1.91)
TW3856 ◊	8.67 (0.81)	41 7/8" (1065)	29 3/4" (757)	16.23 (1.51)	8.64 (0.20)	17 5/32" (436)	21.82 (2.03)
TW38510 ◊	9.25 (0.86)	41 7/8" (1065)	31 3/4" (807)	17.31 (1.61)	9.22 (0.14)	13 5/32" (335)	23.08 (2.14)
TW3862 ◊	9.53 (0.89)	41 7/8" (1065)	32 11/16" (832)	18.39 (1.71)	9.80 (0.09)	9 5/32" (233)	24.35 (2.26)
TW3872 ◊	11.58 (1.08)	41 7/8" (1065)	39 3/4" (1011)	21.64 (2.01)	11.55 (0.07)	10 21/32"* (271)*	28.15 (2.62)
TW3876 ◊	12.16 (1.13)	41 7/8" (1065)	41 3/4" (1061)	22.72 (2.11)	12.13 (0.13)	6 21/32"* (169)*	29.42 (2.73)

• Top of Subfloor to Top of Inside Sill Stop is calculated based upon a structural header height of 6'-10 1/2" (2096) except for 7'-5" (2261) and 7'-9" (2362) heights which are calculated using a header height of 8' (2438).
• Dimensions in parentheses are in millimeters or square meters.
◊ Meets or exceeds clear opening area of 5.7 sq. ft. or 0.53 m², clear opening width of 20" (508) and clear opening height of 24" (610).
* Calculated based upon a structural header height of 8' (2438).

Opening calculations change when using PG Upgrade sill stop. Contact your Andersen supplier for more information.

For cottage and reverse cottage sash opening specifications, visit **andersenwindows.com/openingspecs**.

TILT-WASH DOUBLE-HUNG FULL-FRAME WINDOWS

Custom Sizes and Specification Formulas

Available in 1/8" (3) increments between minimum and maximum widths and heights. Windows can also be custom sized to match standard sizes ending in 1/16" (1.5). Some restrictions apply; contact your Andersen supplier. For minimum rough opening dimensions for joined windows, see specific joining instruction guides. Measurement guide for custom-size windows can be found at **andersenwindows.com/measure**.

Tilt-Wash Double-Hung Windows

Equal

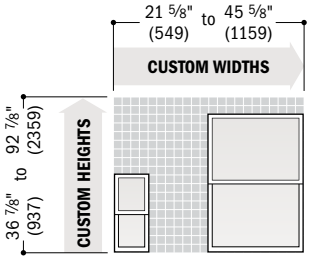

Cottage

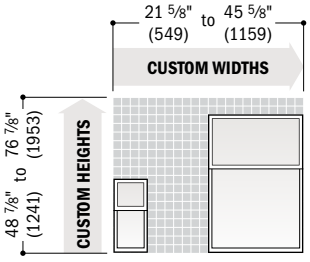

Reverse Cottage

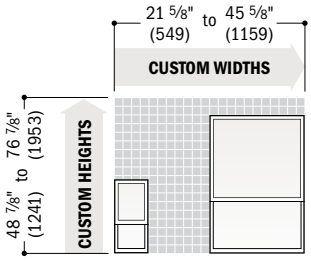

Clear Opening 	**Width** = window width − 1.852" (47) x 2 *Contact your Andersen supplier for clear opening height.*	**Minimum R.O.** 	**Width** = window width + 1/2" (51) **Height** = window height + 0"
Vent Opening 	*Vent opening formulas are dependent on window size; contact your Andersen supplier.*	**Unobst. Glass** 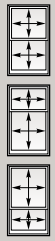	**Width** = window width − 3.376" (86) **Height:** **Upper Sash** = upper sash height − 3.035" (77) **Lower Sash** = lower sash height − 3.831" (97)

Tilt-Wash Picture Windows

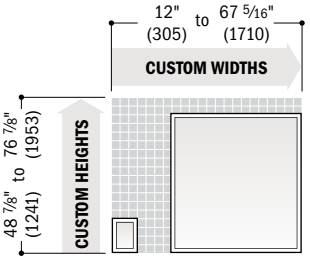

Tilt-Wash Transom Windows

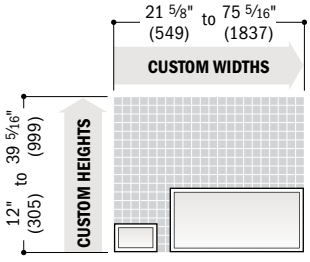

Minimum R.O. 	**Width** = window width + 1/2" (51) **Height** = window height + 0	**Unobst. Glass** 	**Picture Window** **Width** = window width − 4.924" (125) **Height** = window height − 7.531" (191)	**Transom Window** **Width** = window width − 6.625" (168) **Height** = window height − 6.625" (168)

• **Clear Opening** formulas provide dimensions for determining area available for egress. **Vent Opening** formulas provide dimensions for determining area available for passage of air. **Minimum R.O.** (minimum rough opening) formulas provide minimum rough opening width and height dimensions. **Unobst. Glass** (unobstructed glass) formulas provide dimensions for determining area available for passage of light.
• Refer to andersenwindows.com/measure for detailed instructions on how to properly measure for custom-size windows.
• Dimensions in parentheses are in millimeters.

Grille Patterns

	Diamond*	Prairie A	6-Light Prairie	Colonial
Tilt-Wash Double-Hung	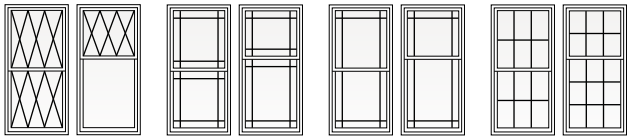 Equal Cottage Equal Cottage Equal Cottage Equal Cottage			

Patterns for double-hung windows are also available in Upper Sash Only (USO) configurations. For picture window patterns that require alignment with double-hung window patterns, identify the sash style (equal, cottage or reverse cottage) when ordering.

	Diamond*	Prairie A	Colonial	Modified Colonial	Modified Colonial with Simulated Meeting Rail	Tall Fractional	Tall Fractional with Simulated Meeting Rail	Short Fractional	Short Fractional with Simulated Meeting Rail	Victorian
Tilt-Wash Picture	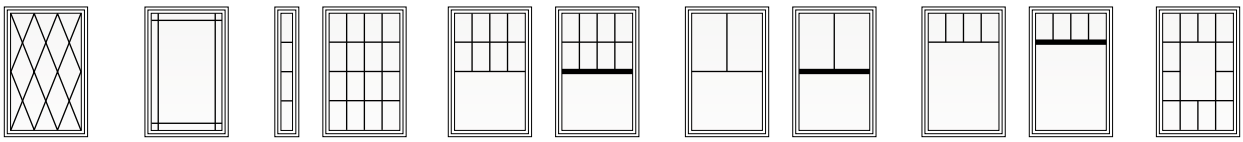									
Tilt-Wash Transom	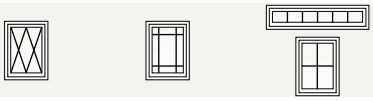									

*Available only in Simulated Divided Light (SDL) configuration and only in 3/4" (19) and 7/8" (22) widths.

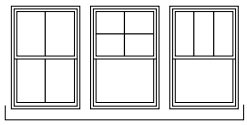
Specified Equal Light Examples

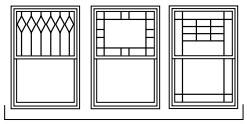
Custom Pattern Examples

Number of lights and overall pattern varies with window size. Patterns may not be available in all configurations or sizes. Specified equal light and custom patterns are also available. For more grille options, see page 18 or visit **andersenwindows.com/grilles**.

Details for Tilt-Wash Double-Hung Windows

Scale 1 1/2" (38) = 1'-0" (305) – 1:8

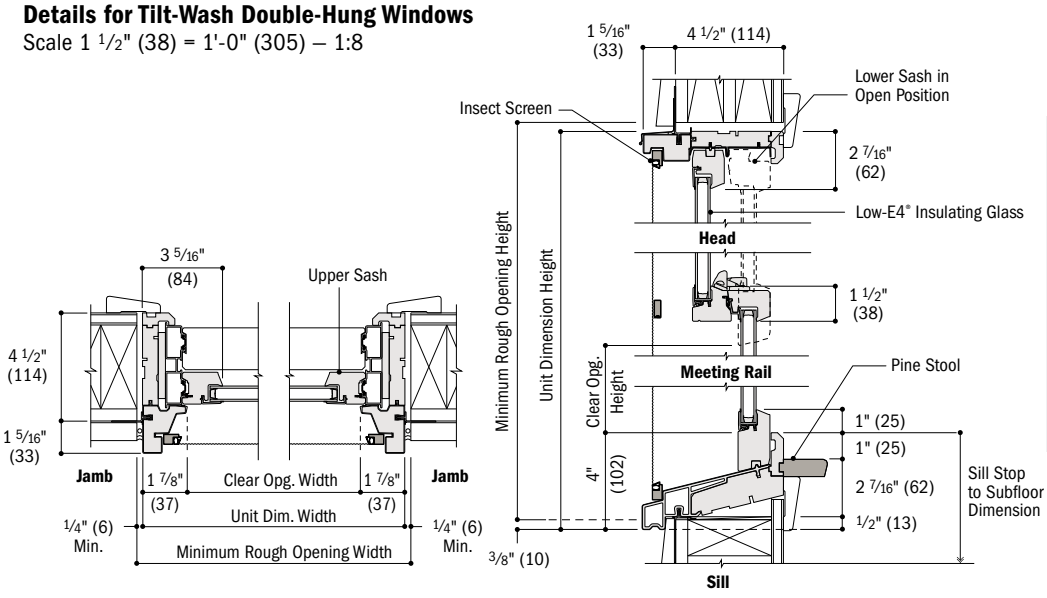

310 and 46 Height Windows Only:

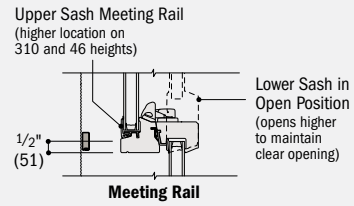

Note: Location of support bar on optional insect screen aligns with meeting rail location on 310 and 46 window heights.

- Light-colored areas are parts included with window. Dark-colored areas are additional Andersen® parts required to complete window assembly as shown.
- **Minimum rough openings may need to be increased to allow for use of building wraps, flashing, sill panning, brackets, fasteners or other items. See installation information on pages 222-223.**
- Details are for illustration only and are not intended to represent product installation methods or materials. Refer to product installation guides at andersenwindows.com.
- Dimensions in parentheses are in millimeters.

TILT-WASH DOUBLE-HUNG FULL-FRAME WINDOWS

Details for Tilt-Wash Picture Windows

Scale 1 1/2" (38) = 1'-0" (305) – 1:8

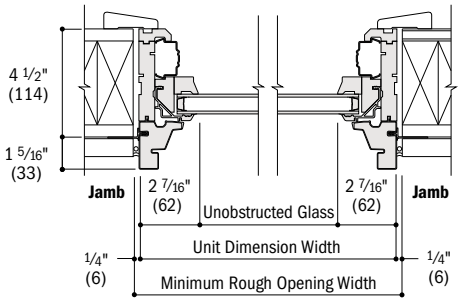

Horizontal Section

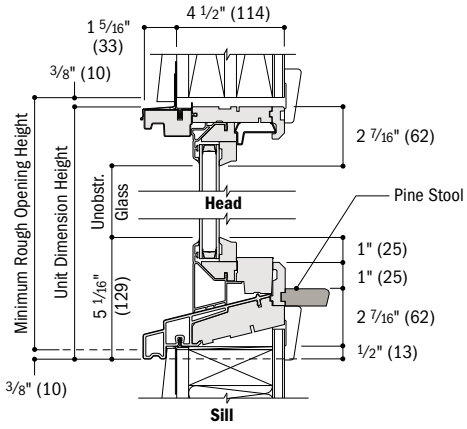

Vertical Section

Details for Tilt-Wash Transom Windows

Scale 1 1/2" (38) = 1'-0" (305) – 1:8

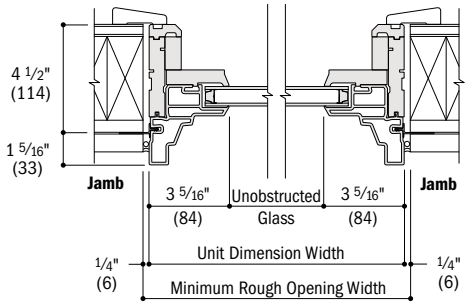

Horizontal Section

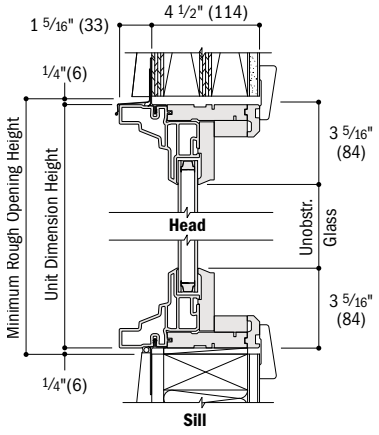

Vertical Section

Horizontal (stack) Joining Detail

Scale 1 1/2" (38) = 1'-0" (305) – 1:8

Overall Window Dimension Height

Sum of individual window heights plus 1/16" (1.5) per join.

Overall Rough Opening Height

Overall window dimension height*.

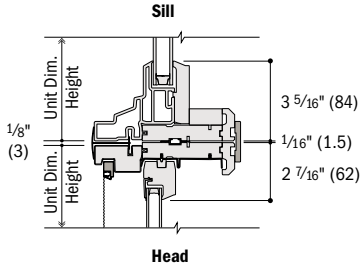

Vertical Section

Transom (**TWT**) over Tilt-Wash Double-Hung

Vertical (ribbon) Joining Detail

Scale 1 1/2" (38) = 1'-0" (305) – 1:8

Overall Window Dimension Width

Sum of individual window widths plus 1/16" (1.5) per join.

Overall Rough Opening Width

Overall window dimension width plus 1/2" (13).

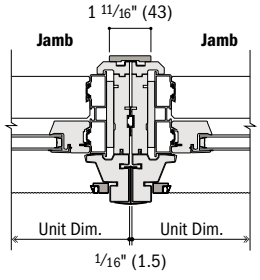

Horizontal Section

Tilt-Wash Double-Hung to Tilt-Wash Double-Hung

For more information on joining, refer to the Combination Designs section starting on page 183.

Separate Rough Openings Detail

Scale 1 1/2" (38) = 1'-0" (305) – 1:8

To meet structural requirements or to achieve a wider joined appearance, windows may be installed into separate rough openings having vertical support by others in combination with Andersen® exterior filler and exterior vinyl trim.

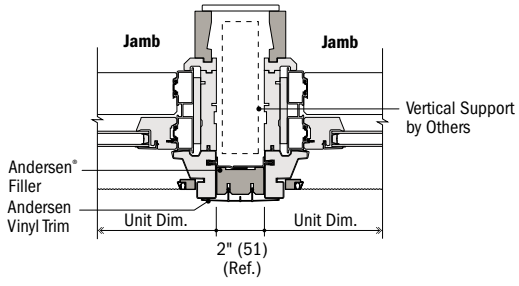

Horizontal Section

Tilt-Wash Double-Hung and Tilt-Wash Double-Hung

- Light-colored areas are parts included with window. Dark-colored areas are additional Andersen® parts required to complete window assembly as shown.
- **Minimum rough openings may need to be increased to allow for use of building wraps, flashing, sill panning, brackets, fasteners or other items. See installation information on pages 222-223.**
- Details are for illustration only and are not intended to represent product installation methods or materials. Refer to product installation guides at andersenwindows.com.
- Structural performance of any combination is only as high as the lowest structural performance of any individual product or join in the combination.
- Consult with an architect or structural engineer regarding minimum requirements for structural support members between adjacent rough openings.
- Dimensions in parentheses are in millimeters.

*For stacks where bottom unit in combination is a double-hung or picture window with a sloped sill. If bottom window has a flat sill add 1/2" (13) to the overall window dimension height.

FEATURES

NARROLINE® DOUBLE-HUNG WINDOW CONVERSION KIT

Andersen® Narroline double-hung window conversion kits are designed specifically to update existing Narroline double-hung windows (made from 1968 to 2013) to tilt-wash double-hung windows. They provide quick and easy installation with less mess than traditional window replacement because there are no window frame tear-out or trim modifications.

Each kit includes:

- Upper and lower sash with your choice of Low-E4® glass options
- Jamb liners
- Balancers
- Lock and keeper

GLASS

Glass spacers are available in black, stainless steel and white.

High-Performance glass options include:

- Low-E4 glass
- Low-E4 HeatLock® glass
- Low-E4 SmartSun™ glass
- Low-E4 SmartSun HeatLock glass
- Low-E4 Sun glass
- Low-E4 PassiveSun® HeatLock glass

High-Performance Low-E4 glass is 45% more energy efficient than ordinary dual-pane glass in winter and 56% more energy efficient in summer.*

Tempered and other glass options are available. Contact your Andersen supplier.

A removable translucent film helps shield the glass from damage during delivery and construction, and simplifies finishing at the job site.

LOW MAINTENANCE

Sash tilt inward for easy cleaning of window exteriors from inside the home (no need for ladders).



See videos of Narroline double-hung window conversion kit features and installation at **andersenwindows.com/narroline.**

EXTERIORS & INTERIORS

EXTERIOR COLORS



White Sandtone Terratone

INTERIOR OPTIONS

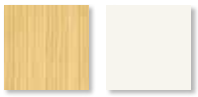

Pine White

Narroline Double-Hung Window Identification

Unobstructed Glass Width Inches/(mm)	Unobstructed Glass Height** Inches/(mm)	Window Number
16 7/16" (418)	13 15/16" (354)	18210
16 7/16" (418)	15 15/16" (405)	1832
16 7/16" (418)	19 15/16" (506)	18310
16 7/16" (418)	21 15/16" (557)	1842
16 7/16" (418)	23 15/16" (608)	1846
16 7/16" (418)	27 15/16" (710)	1852
16 7/16" (418)	35 15/16" (913)	1856
16 7/16" (418)	33 15/16" (862)	1862
20 7/16" (519)	13 15/16" (354)	20210
20 7/16" (519)	15 15/16" (405)	2032
20 7/16" (519)	19 15/16" (506)	20310
20 7/16" (519)	21 15/16" (557)	2042
20 7/16" (519)	23 15/16" (608)	2046
20 7/16" (519)	27 15/16" (710)	2052
20 7/16" (519)	35 15/16" (913)	2056
20 7/16" (519)	33 15/16" (862)	2062
24 7/16" (621)	13 15/16" (354)	24210
24 7/16" (621)	15 15/16" (405)	2432
24 7/16" (621)	19 15/16" (506)	24310
24 7/16" (621)	21 15/16" (557)	2442
24 7/16" (621)	23 15/16" (608)	2446
24 7/16" (621)	27 15/16" (710)	2452
24 7/16" (621)	35 15/16" (913)	2456
24 7/16" (621)	33 15/16" (862)	2462
28 7/16" (722)	13 15/16" (354)	28210
28 7/16" (722)	15 15/16" (405)	2832
28 7/16" (722)	19 15/16" (506)	28310
28 7/16" (722)	21 15/16" (557)	2842
28 7/16" (722)	23 15/16" (608)	2846
28 7/16" (722)	27 15/16" (710)	2852
28 7/16" (722)	35 15/16" (913)	2856
28 7/16" (722)	33 15/16" (862)	2862
32 7/16" (824)	13 15/16" (354)	30210
32 7/16" (824)	15 15/16" (405)	3032
32 7/16" (824)	19 15/16" (506)	30310
32 7/16" (824)	21 15/16" (557)	3042
32 7/16" (824)	23 15/16" (608)	3046
32 7/16" (824)	27 15/16" (710)	3052
32 7/16" (824)	35 15/16" (913)	3056
32 7/16" (824)	33 15/16" (862)	3062
36 7/16" (926)	13 15/16" (354)	34210
36 7/16" (926)	15 15/16" (405)	3432
36 7/16" (926)	19 15/16" (506)	34310
36 7/16" (926)	21 15/16" (557)	3442
36 7/16" (926)	23 15/16" (608)	3446
36 7/16" (926)	27 15/16" (710)	3452
36 7/16" (926)	35 15/16" (913)	3456
36 7/16" (926)	33 15/16" (862)	3462
40 7/16" (1027)	13 15/16" (354)	38210
40 7/16" (1027)	15 15/16" (405)	3832
40 7/16" (1027)	19 15/16" (506)	38310
40 7/16" (1027)	21 15/16" (557)	3842
40 7/16" (1027)	23 15/16" (608)	3846
40 7/16" (1027)	27 15/16" (710)	3852
40 7/16" (1027)	35 15/16" (913)	3856
40 7/16" (1027)	33 15/16" (862)	3862

*Values are based on comparison of Andersen double-hung window conversion kit U-Factor to the U-Factor for clear dual-pane glass non-metal frame default values from the 2006, 2009, 2012, 2015 and 2018 International Energy Conservation Code "Glazed Fenestration" Default Tables.

**Unobstructed Glass Height dimensions are for lower sash only.

Naturally occurring variations in grain, color and texture of wood make each window one of a kind. All wood interiors are unfinished unless a finish is specified.

Printing limitations prevent exact replication of colors and finishes. See your Andersen supplier for actual color and finish samples.

Dimensions in parentheses are in millimeters.

NOTES



TILT-WASH DOUBLE-HUNG INSERT WINDOWS

Custom Sizes 96
Specifications 96
Existing Window Measurements 97
Sill Angle Details 97
Grille Patterns 98
Window Details 98-99
Joining Detail 99
Product Performance 199

CUSTOM SIZING
in ⅛" (3) increments

CUSTOM SIZES

Dimensions in parentheses are in millimeters.

TILT-WASH DOUBLE-HUNG INSERT WINDOWS

FEATURES



FRAME

A A Fibrex® material exterior protects the frame – beautifully. Best of all, it's low maintenance and never needs painting.*

B Sill members are constructed with a wood core and Fibrex material exterior for exceptional, long-lasting* performance. Sill ends are protected and sealed with weather-resistant covers.

C Natural wood stops are available in pine, and prefinished white, dark bronze and black.**

D Weatherstrip throughout the unit provides a long-lasting,* energy-efficient, weather-resistant seal. For the top and bottom rails, an encased foam material is used. The head jamb liner and sill have a rigid vinyl rib that the weatherstrip material compresses against. At the meeting rail, compressible vinyl bulb material is used. Side jamb liners use leaf-type weatherstrip with foam inserts.

E Exterior stop covers are specially designed to allow easy application of high-quality sealant.

A 3 ¼" (83) "pocket window" jamb depth allows convenient replacement without disturbing interior window trim for most double-hung replacement situations.

F Jamb liners are available in gray or white, and must be specified when ordering. Contact your Andersen supplier for details.

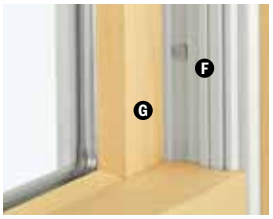

Unique block-and-tackle balancers feature sized-to-the-unit rust-resistant springs that require no adjustment. Glass-reinforced nylon balancer shoes provide smooth, reliable sash operation. They automatically lock the balancer into position when sash are tilted into wash mode.

SASH

Slide wash assists make it easy to tilt the sash into wash mode position.

G Wood sash members are treated with a water-repellent preservative for long-lasting* protection and performance. Interior surfaces are unfinished pine. Low-maintenance prefinished white interiors are also available.

H A polyester-stabilized coat with a Flexacron® finish is electrostatically applied to penetrate all exterior surfaces for maximum protection and a lustrous finish.

I Sash joints simulate the look of traditional mortise-and-tenon construction inside and out.

GLASS

J Glass spacers are available in black, stainless steel and white.

K Silicone bed glazing provides superior weathertightness and durability.

L High-Performance glass options include:

- Low-E4® glass
- Low-E4 HeatLock® glass
- Low-E4 SmartSun™ glass
- Low-E4 SmartSun HeatLock glass
- Low-E4 Sun glass
- Low-E4 PassiveSun® HeatLock glass

Tempered and other glass options are available. Contact your Andersen supplier.

A removable translucent film helps shield the glass from damage during delivery and construction, and simplifies finishing at the job site.

Patterned Glass

Patterned glass options are available. See page 11 for more details.

SILL ANGLES

Sill angles of 0,° 8° and 14° are available to closely match the existing sill in window replacement applications. See page 97 for details.



0° Sill Angle



8° Sill Angle



14° Sill Angle

INSTALLATION

Exterior Stop Cover



An exterior stop cover provides a clean transition from the new window to the existing window casing.

Included Installation Materials



Flat self-hanging shims, backer rod, installation screws and complete instructions are included with each insert window. See the measurement guide and worksheet at andersenwindows.com/measure.

SASH OPTIONS†



Cottage Reverse Cottage

*Visit andersenwindows.com/warranty for details.
**Products with dark bronze and black interiors have matching exteriors.
†Shown on 400 Series tilt-wash double-hung full-frame windows.
"Flexacron" is a registered trademark of PPG Industries, Inc.
Dimensions in parentheses are in millimeters.

EXTERIORS & INTERIORS

EXTERIOR COLORS

White | Canvas | Sandtone | Terratone

Dark Bronze | Forest Green | Black

INTERIOR OPTIONS

Pine | White

Dark Bronze* | Black*

HARDWARE

TRADITIONAL



Lock & Keeper

Black | Stone | White

Stone finish is standard for pine interiors, and white finish is standard for white interiors. Other finishes are optional.

OPTIONAL HARDWARE Sold Separately

ESTATE™



Lock & Keeper

Antique Brass | Bright Brass
Distressed Bronze | Distressed Nickel
Oil Rubbed Bronze | Satin Nickel

Estate lock and keeper reduces the clear opening height by 9/16" (14). Consult your local building code official for egress code requirements in your area.

TRADITIONAL



Bar Lift

Available in all hardware finishes. Shown in stone.

CONTEMPORARY



Bar Lift

Available in all hardware finishes. Shown in satin nickel.

TRADITIONAL



Hand Lift



Finger Lifts

Available in all hardware finishes. Shown in antique brass.

Bold name denotes finish shown.

HARDWARE FINISHES

Antique Brass | Black | Bright Brass | Distressed Bronze** | Distressed Nickel

Oil Rubbed Bronze** | Satin Nickel | Stone | White

ACCESSORIES Sold Separately

SASH

Window Opening Control Device



A recessed window opening control device is available, which limits the sash travel to less than 4" (102) when the window is first opened. Available factory applied, or as a field-applied kit in white, stone and black.

INSTALLATION

Coil Stock

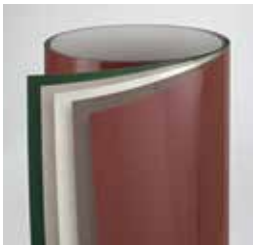

Made from .018"-thick aluminum, Andersen coil stock is available in 24" (610) x 50' (15240) rolls and can be ordered in white, canvas, prairie grass, Sandtone, Terratone, cocoa bean, dark bronze, red rock, forest green, dove gray and black. Color-matched 1 ¼" (32)-long stainless steel trim nails are also available and can be ordered in 1 lb/.454 kg boxes. Coil stock can be cut and formed to profiles at the job site.

ANDERSEN® ART GLASS

Available for 400 Series tilt-wash picture and transom insert windows. Andersen art glass panels come in a variety of original patterns. For more information, see the Art Glass section starting on page 175 or visit andersenwindows.com/artglass.

INSECT SCREENS

Insect Screen Frames



Full and half insect screens are available for most window sizes. The half insect screen (shown above) allows ventilation without affecting the view through the upper sash. Frames are available in colors to match product exteriors.

TruScene® Insect Screens

Our TruScene insect screens let in over 25% more fresh air† and provide 50% greater clarity than conventional Andersen insect screens, all while keeping out unwanted small insects.

Conventional Insect Screens

Conventional insect screens have charcoal gray powder-coated aluminum screen mesh.

GRILLES

Grilles are available in a variety of configurations and widths. See page 18 for details.

CAUTION: Painting and staining may cause damage to rigid vinyl. Andersen does not warrant the adhesion or performance of homeowner-applied paint over vinyl or other factory-coated surfaces. For vinyl painting instructions and preparation, contact your Andersen supplier. Do not paint weatherstrip. Creosote-based stains should not come in contact with Andersen products. Abrasive cleaners or solutions containing corrosive solvents should not be used on Andersen products. See page 223 for a complete list of cautions.

*Products with dark bronze or black interiors have matching exteriors.

**These finishes are "living finishes" that will change with time and use, see limited warranty for details.

†TruScene insect screens let in over 25% more fresh air than standard Andersen fiberglass insect screens.

Naturally occurring variations in grain, color and texture of wood make each window one of a kind. All wood interiors are unfinished unless a finish is specified.

Printing limitations prevent exact replication of colors and finishes. See your Andersen supplier for actual color and finish samples.

Dimensions in parentheses are in millimeters.

TILT-WASH DOUBLE-HUNG INSERT WINDOWS

Custom Sizes and Specification Formulas

Tilt-Wash Double-Hung Insert

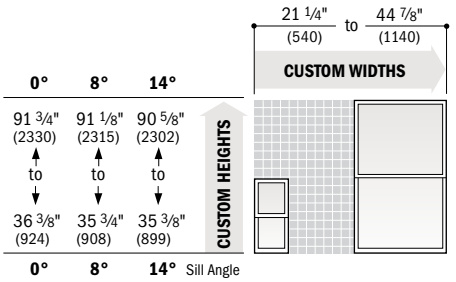

Tilt-Wash Double-Hung Insert – Cottage & Reverse Cottage

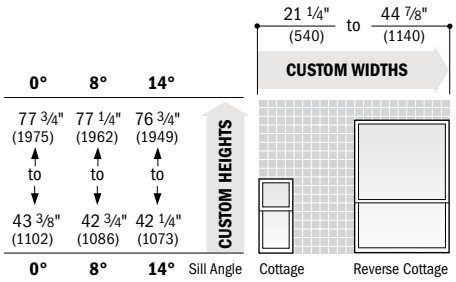

Tilt-Wash Picture Insert

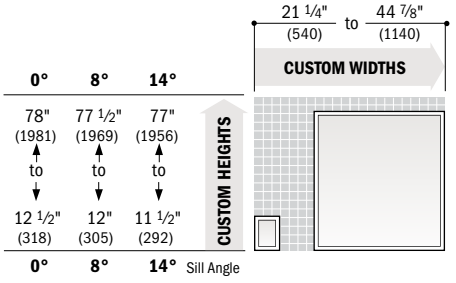

Tilt-Wash Transom Insert

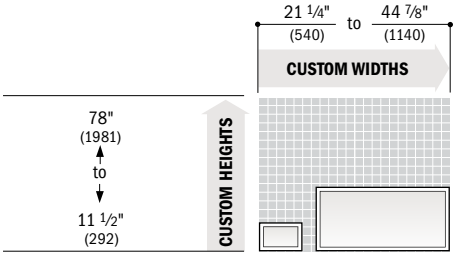

Available in 1/8" (3) increments between minimum and maximum widths and heights. Height limits for double-hung and picture insert windows depend on new insert window sill angle.

For picture and transom insert windows, either height or width must be 68" (1727) or less, and height plus width cannot be less than 28" (711).

Measurement guide for custom-size windows can be found at **andersenwindows.com/measure**.

Grille patterns shown on page 98.
Details shown on pages 98 and 99.

Tilt-Wash Double-Hung Insert Windows

Vent Opening

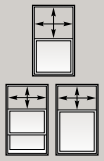

Width = window width − 3.798" (96)

Height = *Depends on sash ratio and specific sill angle of insert window; see below.*

Sash Ratio	Clear Opening Height	Sill Angle Deduction 14°	8°	0°
Equal	= (window height ÷ 2) − sill angle deduction	3.602" (91)	3.836" (97)	4.138" (105)
Cottage	= (window height x 2) ÷ 5 − sill angle deduction	2.879" (73)	3.066" (78)	3.308" (84)
Reverse Cottage	= (window height x 2) ÷ 5 − sill angle deduction	2.083" (53)	2.270" (58)	2.512" (64)

Unobst. Glass

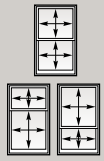

Width = window width − 6.219" (158)

Height = *Depends on sash ratio and specific sill angle of insert window; see below.*

Sash Ratio	Unobstructed Glass Height	Sill Angle Deduction 14°	8°	0°
Equal Upper and Lower Sash	= (window height ÷ 2) − sill angle deduction	3.625 (92)	3.844" (98)	4.156" (106)
Cottage Upper Sash or Reverse Cottage Lower Sash	= (window height x 2) ÷ 5 − sill angle deduction	2.891" (73)	3.078" (78)	3.328" (85)
Cottage Lower Sash or Reverse Cottage Upper Sash	= (window height x 2) ÷ 5 − sill angle deduction	4.344" (110)	4.625" (117)	4.984" (127)

Optional Estate™ hardware will reduce vent opening height by 7/32" (6).

For clear opening specifications, contact your Andersen supplier.

Tilt-Wash Picture and Transom Insert Windows

Unobst. Glass



Picture Insert

Width = window width − 6.0" (152)

Height = *Depends on sash ratio and specific sill angle of insert window; see below.*

Unobstructed Glass Height	Sill Angle Deduction 14°	8°	0°
= window height − sill angle deduction	5.816" (148)	6.285" (160)	6.890" (175)

Transom Insert

Width = window width − 6.0" (152)

Height = window width − 6.0" (152)

- **Clear Opening** formulas provide dimensions for determining area available for egress. **Vent Opening** formulas provide dimensions for determining area available for passage of air. **Unobst. Glass** (unobstructed glass) formulas provide dimensions for determining area available for passage of light.
- Refer to andersenwindows.com/measure for detailed instructions on how to properly measure for insert windows.
- Dimensions in parentheses are in millimeters.

Existing Window Measurements

Required measurements:

1. Existing Opening Height

2. Existing Sill Angle

3. Existing Opening Width

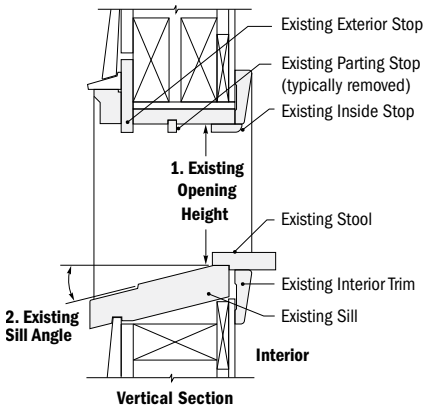

Vertical Section

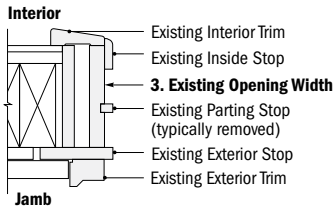

Horizontal Section

Existing Double-Hung Window

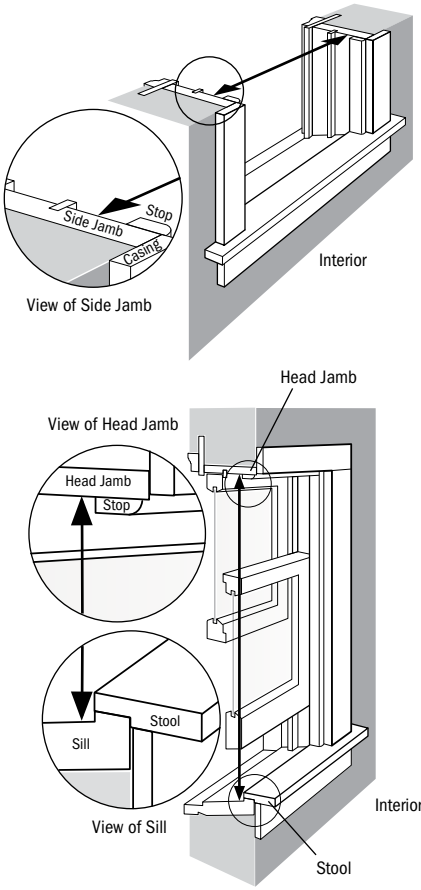

Existing Picture Window

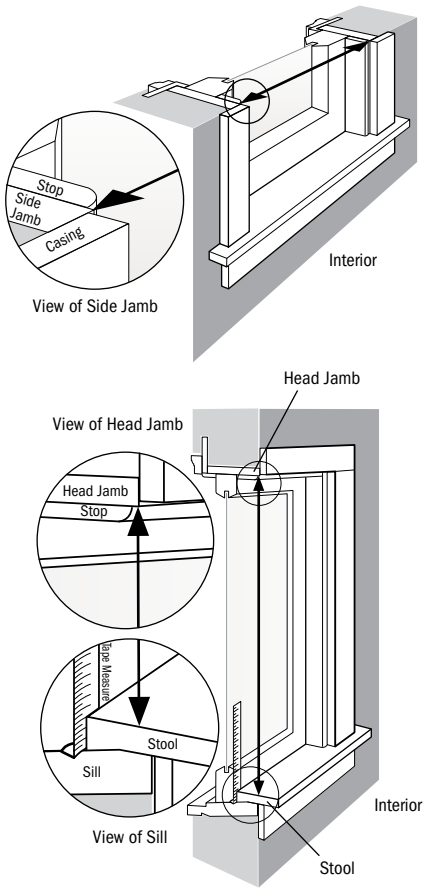

Sill Angle Details

Scale 3" (76) = 1'-0" (305) – 1:4

Select a sill angle that most closely matches your existing sill angle.

Windows with a smaller sill angle will have a larger maximum height.

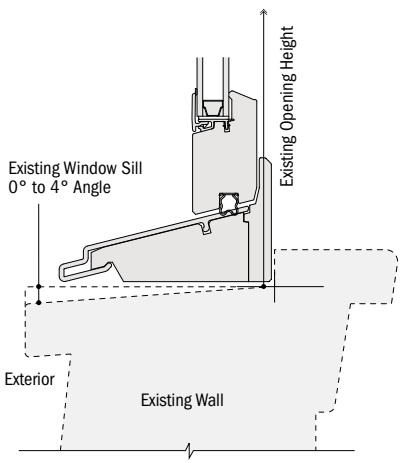

0° Sill

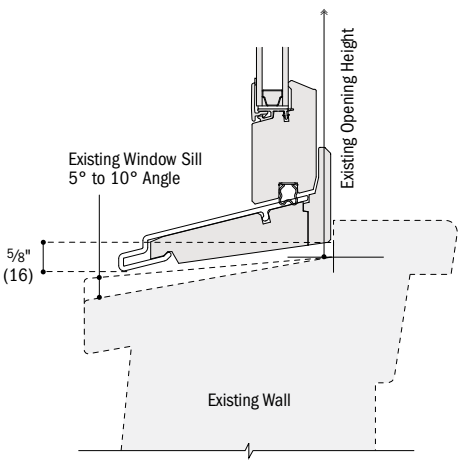

8° Sill

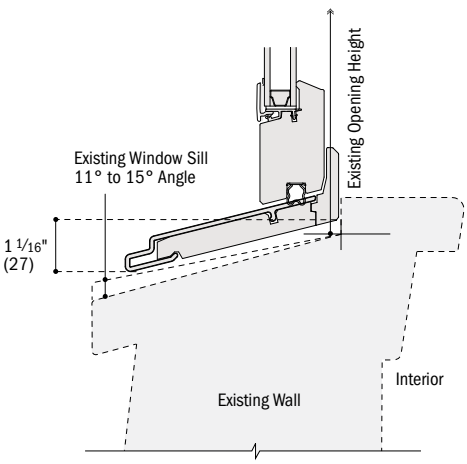

14° Sill

- Details are for illustration only and are not intended to represent product installation methods or materials. Refer to product installation guides at andersenwindows.com.
- Refer to andersenwindows.com/measure for detailed instructions on how to properly measure for insert windows.
- Dimensions in parentheses are in millimeters.

TILT-WASH DOUBLE-HUNG INSERT WINDOWS

Grille Patterns

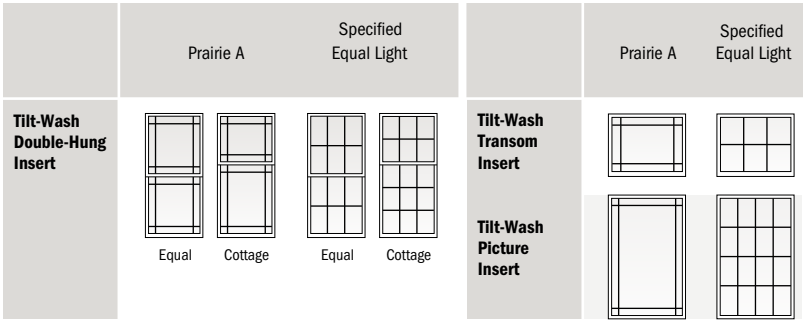

Patterns for double-hung windows are also available in Upper Sash Only (USO) configurations. For picture window patterns that require alignment with double-hung window patterns, identify the sash style (equal, cottage or reverse cottage) when ordering.

Number of lights and overall pattern varies with window size. Patterns may not be available in all configurations or sizes. For more grille options, see page 18 or visit **andersenwindows.com/grilles**.

Details for Tilt-Wash Double-Hung Insert Window

Scale 1 1/2" (38) = 1'-0" (305) – 1:8

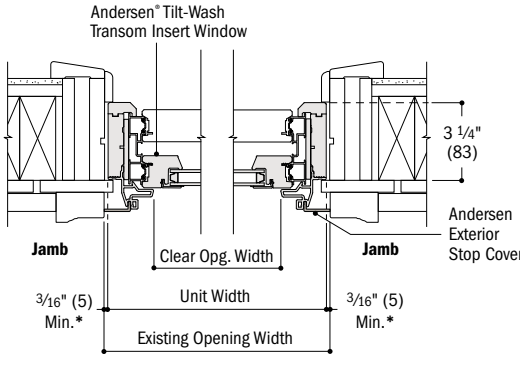

Horizontal Section

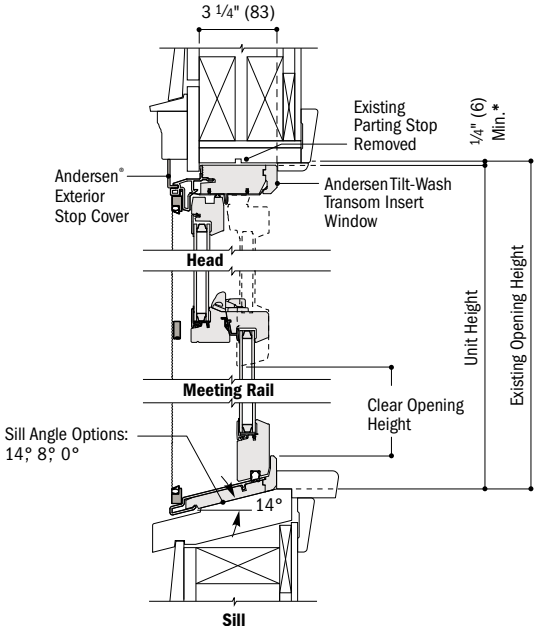

Vertical Section

- Light-colored areas are parts included with window. Dark-colored areas are additional Andersen® parts required to complete window assembly as shown.
- Details are for illustration only and are not intended to represent product installation methods or materials. Refer to product installation guides at andersenwindows.com.
- Dimensions in parentheses are in millimeters.

*Refer to andersenwindows.com/measure for detailed instructions on how to properly measure for insert windows.

Details for Tilt-Wash Picture Insert Windows

Scale 1 1/2" (38) = 1'-0" (305) – 1:8

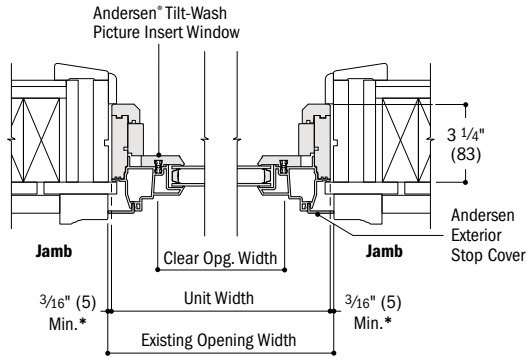

Horizontal Section

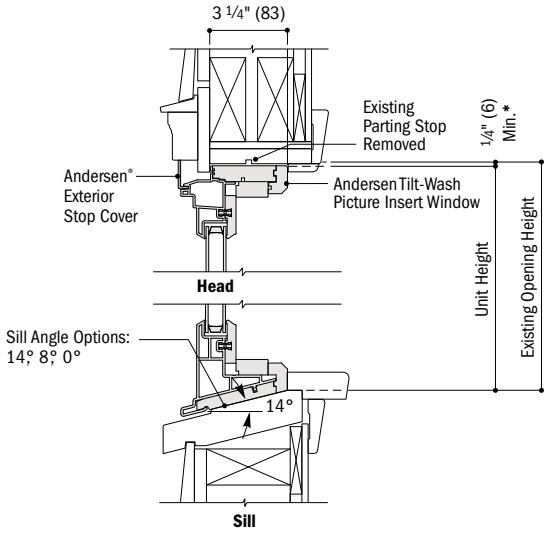

Vertical Section

Details for Tilt-Wash Transom Insert Windows

Scale 1 1/2" (38) = 1'-0" (305) – 1:8

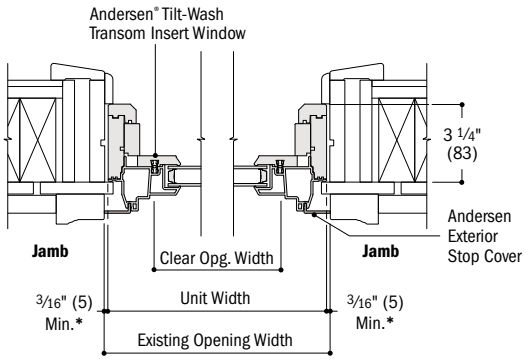

Horizontal Section

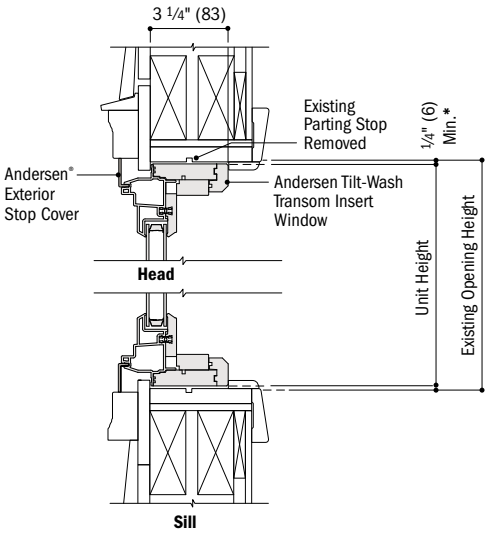

Vertical Section

Joining Combinations

Join insert windows in one-way horizontal (stack) or vertical (ribbon) combinations.

Do not join insert windows in two-way combinations.

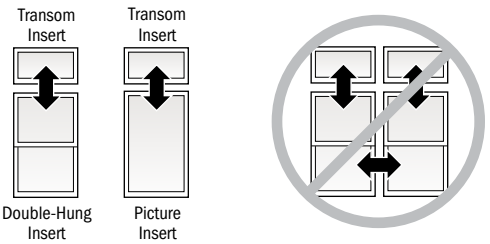

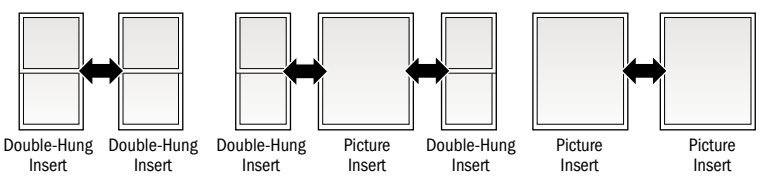

Vertical (ribbon) Joining Detail

Scale 1 1/2" (38) = 1'-0" (305) – 1:8

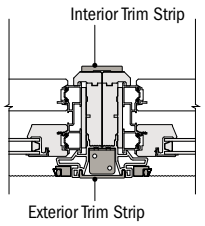

Horizontal Section

Tilt-Wash Double-Hung Insert to Tilt-Wash Double-Hung Insert

For more information on joining, refer to the Combination Designs section starting on page 183.

- Light-colored areas are parts included with window. Dark-colored areas are additional Andersen® parts required to complete window assembly as shown.
- Details are for illustration only and are not intended to represent product installation methods or materials. Refer to product installation guides at andersenwindows.com.
- Structural performance of any combination is only as high as the lowest structural performance of any individual product or join in the combination.
- Dimensions in parentheses are in millimeters.
- *Refer to andersenwindows.com/measure for detailed instructions on how to properly measure for insert windows.

NOTES



BAY & BOW WINDOWS

Casement Bay & Bow Windows

Sizing 104-105
Custom Sizes 106-107
Window Details 108-109

Woodwright® & Tilt-Wash Double-Hung Bay Windows

Tables of Sizes 110
Window Details 111

CUSTOM SIZING
in ⅛" (3) increments

CUSTOM SIZES

Dimensions in parentheses are in millimeters.

FEATURES

CASEMENT BAY & BOW WINDOWS

Casement bay and bow windows are constructed using basic casement windows. Some options must be specified to complete an order, including color, glass and hardware.

A Premilled mullion posts join individual casement windows into 30° bay, 45° bay, 90° bay and 10° bow windows. Mullion posts lock into a channel in each adjoining casement window for a sturdy, easy-to-install unit. The exterior is sheathed with vinyl cladding; the interior is trimmed in natural wood that can be finished to enhance any décor.

B Andersen® auxiliary casing is supplied as trim to finish the top of casement 30° bay, 45° bay and 10° bow windows. Auxiliary casing is an option for casement 90° bay windows.

C Platforms made of ¾" (19) plywood at the head and sill of bay and bow windows provide added strength to the assembly.

Custom-size casement bay and bow windows are available in a wide variety of configurations. See pages 106-107. Contact your Andersen supplier for details.

See page 22 for casement window color and hardware options.



Casement 30° Bay Window



Casement 90° (Box) Bay Window

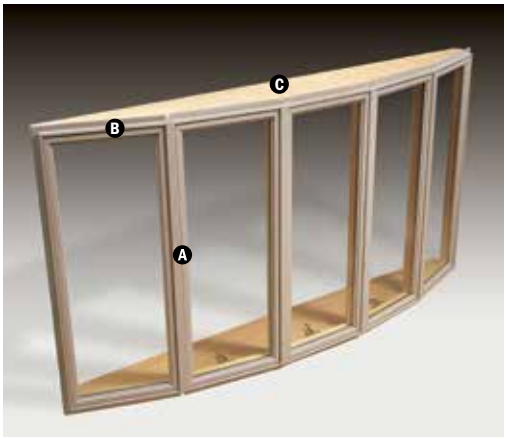

Casement 10° Bow Window

DOUBLE-HUNG BAY WINDOWS

Double-hung bay windows are constructed using basic Woodwright ® or tilt-wash windows. Some options must be specified to complete an order, including color and glass.

D Premilled mullion posts join individual units into 30° and 45° bay windows for a sturdy, easy-to-install unit. The exterior is sheathed with vinyl cladding; the interior is trimmed in natural wood that can be finished to enhance any décor.

E Andersen auxiliary casing is mitered, joined and installed as trim to finish the top of double-hung 30° and 45° bay windows. Cellular Fibrex® material is covered in vinyl cladding.

F Platforms made of ¾" (19) plywood at the head and sill of bay windows provide added strength to the assembly.

See page 52 for Woodwright window color and hardware options. See page 80 for tilt-wash window color and hardware options.



Double-Hung 45° Bay Window

Installation of custom bay units having a projection greater than 24" (610) requires the expertise of a structural engineer to determine needed structural support. Failure to use sufficient structural support could result in personal injury, or damage to windows or other property. Each cable within the system can support a maximum load of 500 lbs/227 kgs. If the section of the window unit requiring support exceeds 1,000 lbs/554 kgs, additional support is needed.

Dimensions in parentheses are in millimeters.

ACCESSORIES Sold Separately. Refer to the individual product sections for a full list of accessories.

CASEMENT FRAME

Extension Jambs & Jamb Adaptors

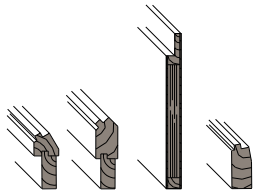

Extension jambs and extension jamb adaptors are available in unfinished pine, or prefinished white, dark bronze and black.

For casement 30° and 45° bay windows, extension jambs are available for 4 9/16" (116), 5 1/4" (133), 6 9/16" (167) and 7 1/8" (181) wall depths. Custom sizes are available, contact your Andersen supplier. Some sizes may be veneered.

For casement 90° bay and 10° bow windows, extension jambs are available for 5 1/4" (133), 6 9/16" (167) and 7 1/8" (181) wall depths. For wall depths less than 5 1/4" (133), order 5 1/4" (133) extension jambs and trim to fit.

Head & Seat Board



Head and seat boards are available in unfinished pine, maple and oak, and prefinished white, dark bronze and black.

For casement 30° and 45° bay windows, head and seat boards are available in 4 9/16" (116), 5 1/4" (133), 6 9/16" (167) and 7 1/8" (181) wall depths.

For casement 90° bay and 10° bow windows, head and seat boards are available for 5 1/4" (133), 6 9/16" (167) and 7 1/8" (181) wall depths. For wall depths less than 5 1/4" (133), order 5 1/4" (133) head and seat boards, and trim to fit.

DOUBLE-HUNG FRAME

Extension Jambs & Jamb Adaptors

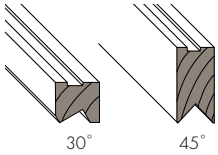

Extension jambs and extension jamb adaptors are available in unfinished pine, or prefinished white, dark bronze and black.

The jamb depth of the window unit plus extension jamb adaptor is 4 1/2" (114). For double-hung bay windows, 5 1/4" (133), 6 9/16" (167) and 7 1/8" (181) extension jambs are available. Some sizes may be veneered.

Head & Seat Board



Head and seat boards are available in unfinished pine, maple and oak, and prefinished white, dark bronze and black. Some sizes may be veneered.

For double-hung bay windows, 5 1/4" (133), 6 9/16" (167) and 7 1/8" (181) extension jambs are available.

INSTALLATION

Cable Support

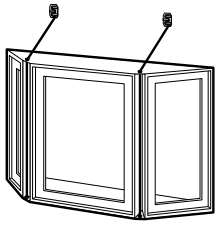

A cable provides additional support and is recommended for installations that extend out from the structure without a framed support wall beneath the unit. Each cable within the system can support a maximum load of 500 lbs/227 kgs. If the section of the window unit requiring support exceeds 1,000 lbs/554 kgs, additional support is necessary. Failure to use sufficient structural support could result in personal injury, or damage to windows or other property.

⚠ WARNING

Proper support of projecting bay and bow windows is required, see installation instructions. Failure to do so may result in injury, product or property damage.

CAUTION: Painting and staining may cause damage to rigid vinyl. Andersen does not warrant the adhesion or performance of homeowner-applied paint over vinyl or other factory-coated surfaces. For vinyl painting instructions and preparation, contact your Andersen supplier. Do not paint weatherstrip. Creosote-based stains should not come in contact with Andersen products. Abrasive cleaners or solutions containing corrosive solvents should not be used on Andersen products. See page 223 for a complete list of cautions.

Dimensions in parentheses are in millimeters.

Sizing for Casement Bay Windows

30°, 45° and 90° bay windows are available in a variety of standard-size 400 Series casement window configurations, covering widths in approximately 4" (102) increments between the minimum and maximum total widths. Custom-size bay windows are available in 1/8" (3) increments. See pages 106-107 for more information.

Casement 30°, 45° and 90° Bay Windows

Order Description Examples

Picture With Casement Flankers

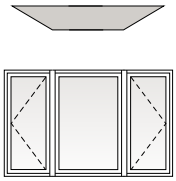

30BAY C145-P3045-C145

30° Bay
45° Bay
90° Bay
Casement Flanker Size
Casement Flanker Size
Picture Size (single or joined combination)

Casement With Casement Flankers

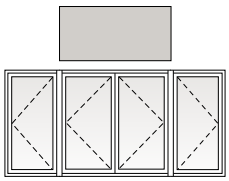

90BAY CW145-CW245-CW145

30° Bay
45° Bay
90° Bay
Casement Flanker Size
Casement Flanker Size
Casement Size (single, twin, triple or joined combination)

Picture With Picture Flankers

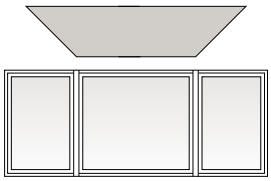

45BAY P3045-P5045-P3045

30° Bay
45° Bay
90° Bay
Picture Flanker Size
Picture Flanker Size
Picture Size (single or joined combination)

Casement With Picture Flankers

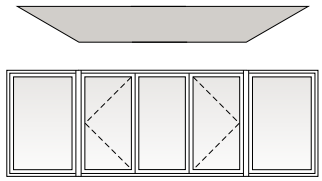

30BAY P3045-CW34-P3045

30° Bay
45° Bay
90° Bay
Picture Flanker Size
Picture Flanker Size
Casement Size (single, twin, triple or joined combination)

Design Criteria

- Minimum and maximum number of units: 3-5
- Flankers (last window on each end of combination) must be of equal size
- Flankers (last window on each end of combination) must be single units
- Center units can be single, twin or triple casement units, casement picture units or joined combinations of casement units
- Center units used in joined combinations must be of equal size

MINIMUM AND MAXIMUM WINDOW WIDTH

Window Configuration	Minimum and Maximum Window Width Dimensions
30° Bay	4'-2 5/8" (1286) to 12'-0 1/8" (3661)
45° Bay	3'-10 7/8" (1191) to 12'-1 3/8" (3693)
90° (Box) Bay	2'-1 3/8" (645) to 9'-8 5/8" (2962)

WINDOW HEIGHT

Window Number	Window Dimension Height	Minimum Rough Opening Height
X12	2'-1 5/8" (651)	2'-2 1/8" (664)
X125	2'-5 7/8" (759)	2'-6 3/8" (772)
X13, **P**XX30	3'-1 7/16" (951)	3'-2" (965)
X135, **P**XX35	3'-6 5/16" (1075)	3'-6 7/8" (1089)
X14, **P**XX40	4'-1 1/2" (1257)	4'-2" (1270)
X145, **P**XX45	4'-6 5/16" (1380)	4'-6 7/8" (1394)
X15, **P**XX50	5'-1 3/8" (1559)	5'-1 7/8" (1572)
X155, **P**XX55	5'-6 5/16" (1684)	5'-6 7/8" (1699)
X16, **P**XX60	6'-1 3/8" (1864)	6'-1 7/8" (1876)

Projection Dimensions

Projection dimension is dependent on the flanker window width along with the bay angle.

Casement Flanker Window Number	**CR**XX	**CN**XX	**C**XX	**CW**XX	**CX**XX	**CXW**XX			
Casement Picture Flanker Window Number						**P30**XX	**P35**XX	**P40**XX	**P45**XX
30° Bay 	10 3/16" (259)	11 15/16" (303)	13 3/4" (349)	15 7/8" (403)	17 7/16" (443)	19 11/16" (500)	22 1/8" (562)	25 11/16" (652)	–
45° Bay 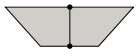	14 3/16" (360)	16 5/8" (422)	19 3/16" (487)	22 3/16" (564)	24 7/16" (621)	27 9/16" (700)	31" (787)	36 1/16" (916)	39 1/2" (1003)
90° (Box) Bay 	23" (584)	26 1/2" (673)	30 1/8" (765)	34 3/8" (873)	37 1/2" (953)	41 15/16" (1065)	46 13/16" (1189)	–	–

⚠ WARNING

Proper support of projecting bay and bow windows is required, see installation instructions. Failure to do so may result in injury, product or property damage.

- Window Dimension always refers to outside frame-to-frame dimension.
- **Minimum Rough Opening dimensions may need to be increased to allow for use of building wraps, flashing, sill panning, brackets, fasteners or other items. See pages 222-223 for more details.**
- Projection Dimension refers to outside of exterior sheathing to outer edge of window.
- One Andersen® cable kit, with two cables, is included with unit for proper installation. Each cable supports a maximum load of 500 lbs/227 kgs; additional support is necessary for loads exceeding 1,000 lbs/454 kgs.
- Bay windows include only basic unit. Roof and other installation materials provided by other manufacturers.
- For walkout bay window details and installation guidelines, contact your Andersen supplier.
- Dimensions in parentheses are in millimeters.

Sizing for Casement Bow Windows

10° bow windows are available in a variety of standard-size 400 Series casement window configurations, covering widths in approximately 4" (102) increments between the minimum and maximum total widths. Custom-size bay windows are available in 1/8" (3) increments. See page 106 for more information.

Casement 10° Bow Windows

Order Description Examples

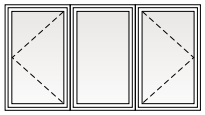

10BOW CX145-3

10° Bow | Casement or Picture Size | Number of Same Size Units

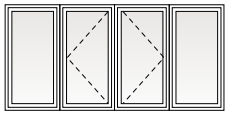

10BOW CW145-4

10° Bow | Casement or Picture Size | Number of Same Size Units

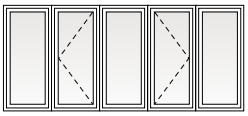

10BOW C145-5

10° Bow | Casement or Picture Size | Number of Same Size Units

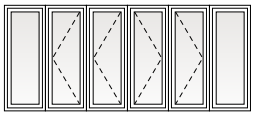

10BOW CN145-6

10° Bow | Casement or Picture Size | Number of Same Size Units

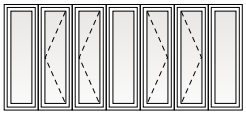

10BOW CR145-7

10° Bow | Casement or Picture Size | Number of Same Size Units

Design Criteria

- Minimum and maximum number of units: 3-7
- All units must be of equal size
- Configuration must be all casement windows (left venting, right venting or stationary) or all casement picture windows

MINIMUM AND MAXIMUM WINDOW WIDTH

Window Configuration	Minimum and Maximum Window Width Dimensions
10° Bow	4'-4 1/2" (1334) to 13'-8 3/8" (4175)

WINDOW HEIGHT

Window Number	Window Dimension Height	Minimum Rough Opening Height
X12	2'-1 5/8" (651)	2'-2 1/8" (664)
X125	2'-5 7/8" (759)	2'-6 3/8" (772)
X13, **P**XX30	3'-1 7/16" (951)	3'-2" (965)
X135, **P**XX35	3'-6 5/16" (1075)	3'-6 7/8" (1089)
X14, **P**XX40	4'-1 1/2" (1257)	4'-2" (1270)
X145, **P**XX45	4'-6 5/16" (1380)	4'-6 7/8" (1394)
X15, **P**XX50	5'-1 3/8" (1559)	5'-1 7/8" (1572)
X155, **P**XX55	5'-6 5/16" (1684)	5'-6 7/8" (1699)
X16, **P**XX60	6'-1 3/8" (1864)	6'-1 7/8" (1876)

Projection Dimensions

Projection dimension is dependent on the window width along with the total number of windows.

Casement Window Number	**CR**XX	**CN**XX	**C**XX	**CW**XX	**CX**XX	**CXW**XX			
Casement Picture Window Number						**P35**XX	**P40**XX	**P45**XX	**P50**XX
3-Wide	4 5/16" (110)	4 15/16" (125)	5 9/16" (141)	6 5/16" (160)	6 7/8" (175)	7 5/8" (194)	8 7/16" (214)	9 11/16" (246)	10 9/16" (268)
4-Wide	7 3/8" (187)	8 9/16" (217)	9 13/16" (249)	11 5/16" (287)	12 3/8" (314)	13 7/8" (352)	15 9/16" (395)	–	–
5-Wide	10 5/16" (262)	12 1/8" (308)	14" (356)	16 3/16" (411)	17 13/16" (452)	–	–	–	–
6-Wide	14 13/16" (376)	17 1/2" (445)	20 1/4" (514)	–	–	–	–	–	–
7-Wide	19 1/8" (486)	22 11/16" (576)	26 3/8" (670)	–	–	–	–	–	–

⚠ WARNING

Proper support of projecting bay and bow windows is required, see installation instructions. Failure to do so may result in injury, product or property damage.

- Window Dimension always refers to outside frame-to-frame dimension.
- **Minimum Rough Opening dimensions may need to be increased to allow for use of building wraps, flashing, sill panning, brackets, fasteners or other items. See pages 222-223 for more details.**
- Projection Dimension refers to outside of exterior sheathing to outer edge of window.
- One Andersen® cable kit, with two cables, is included with unit for proper installation. Each cable supports a maximum load of 500 lbs/227 kgs; additional support is necessary for loads exceeding 1,000 lbs/454 kgs.
- Bow windows include only basic unit. Roof and other installation materials provided by other manufacturers.
- For walkout bow window details and installation guidelines, contact your Andersen supplier.
- Dimensions in parentheses are in millimeters.

Individual window units are available custom sized in 1/8" (3) increments. In addition to venting shown in tables, other standard configurations are available. Choose left venting, right venting or stationary as viewed from the exterior. Measurement guide can be found at **andersenwindows.com/measure**.

Custom Sizes and Projection Range for Casement 30° Bay Windows

Sash Ratio Window Configuration	Center Window Venting Configuration	30° Bay Window Dimension					Projection	
		Minimum Width Inches/(mm)	Maximum Width Inches/(mm)		Minimum Height Inches/(mm)	Maximum Height Inches/(mm)	Minimum Inches/(mm)	Maximum Inches/(mm)
1:1:1 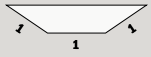	Venting or Stationary 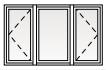	50" (1270)	101 1/2" (2578)	x	26 1/8" (664)	73 7/8" (1876)	10 1/4" (260)	19 5/8" (498)
1:2:1 	Venting or Stationary 	67 3/8" (1711)	137 1/2" (3493)	x	26 1/8" (664)	73 7/8" (1876)	10 1/4" (260)	19 5/8" (498)
1:2:1 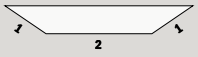	Picture 	70 7/8" (1800)	115 1/4" (2927)	x	38" (965)	73 7/8" (1876)	10 3/4" (273)	16 5/8" (422)
		115 1/4" (2927)	137 5/8" (3496)	x	38" (965)	61 7/8" (1571)	16 5/8" (422)	19 5/8" (498)
1:3:1 	Venting or Stationary 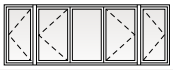	84 1/2" (2146)	144" (3658)	x	26 1/8" (664)	73 7/8" (1876)	10 1/4" (260)	16 1/2" (419)
1:3:1 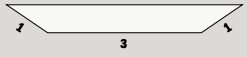	Picture 	83 7/8" (2130)	97 7/8" (2486)	x	38" (965)	73 7/8" (1876)	10 1/4" (260)	11 5/8" (295)
		97 7/8" (2486)	116 7/8" (2969)	x	38" (965)	61 7/8" (1571)	11 5/8" (295)	13 5/8" (346)

Custom Sizes and Projection Range for Casement 45° Bay Windows

Sash Ratio Window Configuration	Center Window Venting Configuration	45° Bay Window Dimension					Projection	
		Minimum Width Inches/(mm)	Maximum Width Inches/(mm)		Minimum Height Inches/(mm)	Maximum Height Inches/(mm)	Minimum Inches/(mm)	Maximum Inches/(mm)
1:1:1 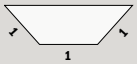	Venting or Stationary 	45 3/4" (1162)	91 1/4" (2318)	x	26 1/8" (664)	73 7/8" (1876)	14 3/16" (360)	27 1/2" (699)
1:2:1 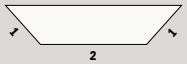	Venting or Stationary 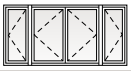	63" (1600)	127 1/4" (3232)	x	26 1/8" (664)	73 7/8" (1876)	14 1/4" (362)	27 1/2" (699)
1:2:1 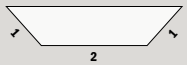	Picture 	66" (1676)	106 7/8" (2715)	x	38" (965)	73 7/8" (1876)	14 7/8" (378)	23 1/4" (591)
		106 7/8" (2715)	127 1/4" (3232)	x	38" (965)	61 7/8" (1571)	23 1/4" (591)	27 1/2" (699)
1:3:1 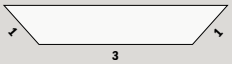	Venting or Stationary 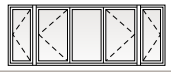	80 1/8" (2035)	144" (3658)	x	26 1/8" (664)	73 7/8" (1876)	14 1/4" (362)	24 5/16" (618)
1:3:1 	Picture 	79 5/8" (2023)	92 3/4" (2356)	x	38" (965)	73 7/8" (1876)	14 3/16" (360)	16 1/4" (413)
		92 3/4" (2356)	110 3/8" (2804)	x	38" (965)	61 7/8" (1571)	16 1/4" (413)	19" (483)

⚠ WARNING

Proper support of projecting bay and bow windows is required, see installation instructions. Failure to do so may result in injury, product or property damage.

- Window Dimension always refers to outside frame-to-frame dimension.
- **Minimum Rough Opening dimensions may need to be increased to allow for use of building wraps, flashing, sill panning, brackets, fasteners or other items. See pages 222-223 for more details.**
- Projection Dimension refers to outside of exterior sheathing to outer edge of window.
- One Andersen® cable kit, with two cables, is included with unit for proper installation. Each cable supports a maximum load of 500 lbs/227 kgs; additional support is necessary for loads exceeding 1,000 lbs/454 kgs.
- Bay windows include only basic unit. Roof and other installation materials provided by other manufacturers.
- For walkout bay window details and installation guidelines, contact your Andersen supplier.
- Dimensions in parentheses are in millimeters.
- Refer to andersenwindows.com/measure for detailed instructions on how to properly measure for custom-size windows.

Custom Sizes and Projection Range for Casement 90° Bay Windows

Window Configuration	Center Window Venting Configuration	90° (Box) Bay Window Dimension					Flanker		Projection	
		Minimum Width Inches/(mm)	Maximum Width Inches/(mm)		Minimum Height Inches/(mm)	Maximum Height Inches/(mm)	Minimum Width Inches/(mm)	Maximum Width Inches/(mm)	Minimum Depth Inches/(mm)	Maximum Depth Inches/(mm)
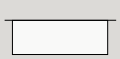	Picture 	38 1/4" (972)	61 7/8" (1572)	x	38" (965)	73 7/8" (1876)	17" (432)	35 7/8" (911)	21 1/2" (546)	40 3/8" (1026)
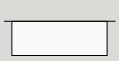	Picture 	61 7/8" (1572)	74 1/8" (1883)	x	38" (965)	61 7/8" (1572)	17" (432)	35 7/8" (911)	21 1/2" (546)	40 3/8" (1026)
	Venting or Stationary 	36 3/8" (924)	74 1/4" (1886)	x	26 1/8" (664)	73 7/8" (1876)	17" (432)	35 7/8" (911)	21 1/2" (546)	40 3/8" (1026)
	Venting or Stationary 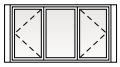	53 1/2" (1359)	110 3/8" (2804)	x	26 1/8" (664)	73 7/8" (1876)	17" (432)	35 7/8" (911)	21 1/2" (546)	40 3/8" (1026)

Custom Sizes and Projection Range for Casement 10° Bow Windows

Window Configuration	Center Window Venting Configuration	10° Bow Window Dimension					Projection	
		Minimum Width Inches/(mm)	Maximum Width Inches/(mm)		Minimum Height Inches/(mm)	Maximum Height Inches/(mm)	Minimum Depth Inches/(mm)	Maximum Depth Inches/(mm)
3-Wide	Venting or Stationary 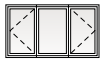	52 1/2" (1334)	108 7/8" (2765)	x	26 1/8" (664)	73 7/8" (1876)	4 3/8" (111)	7 5/8" (194)
4-Wide 	Venting or Stationary 	69 1/2" (1765)	143 7/8" (3654)	x	26 1/8" (664)	73 7/8" (1876)	7 3/8" (187)	13 7/8" (352)
5-Wide 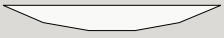	Venting or Stationary 	85 7/8" (2181)	164 1/4" (4172)	x	26 1/8" (664)	73 7/8" (1876)	10 3/8" (264)	18 5/8" (473)
6-Wide 	Venting or Stationary 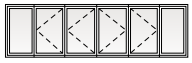	101 5/8" (2581)	164 1/4" (4172)	x	26 1/8" (664)	73 7/8" (1876)	14 7/8" (378)	23 3/16" (589)
7-Wide 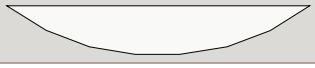	Venting or Stationary 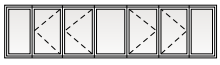	116 5/8" (2962)	164 1/4" (4172)	x	26 1/8" (664)	73 7/8" (1876)	19 3/16" (487)	26 3/8" (670)

⚠ WARNING

Proper support of projecting bay and bow windows is required, see installation instructions. Failure to do so may result in injury, product or property damage.

- Window Dimension always refers to outside frame-to-frame dimension.
- **Minimum Rough Opening dimensions may need to be increased to allow for use of building wraps, flashing, sill panning, brackets, fasteners or other items. See pages 222-223 for more details.**
- Projection Dimension refers to outside of exterior sheathing to outer edge of window.
- One Andersen® cable kit, with two cables, is included with unit for proper installation. Each cable supports a maximum load of 500 lbs/227 kgs; additional support is necessary for loads exceeding 1,000 lbs/454 kgs.
- Bay and bow windows include only basic unit. Roof and other installation materials provided by other manufacturers.
- For walkout bay and bow window details and installation guidelines, contact your Andersen supplier.
- Dimensions in parentheses are in millimeters.
- Refer to andersenwindows.com/measure for detailed instructions on how to properly measure for custom-size windows.

Detail for Casement 30° Bay Windows

Scale 1 1/2" (38) = 1'-0" (305) – 1:8

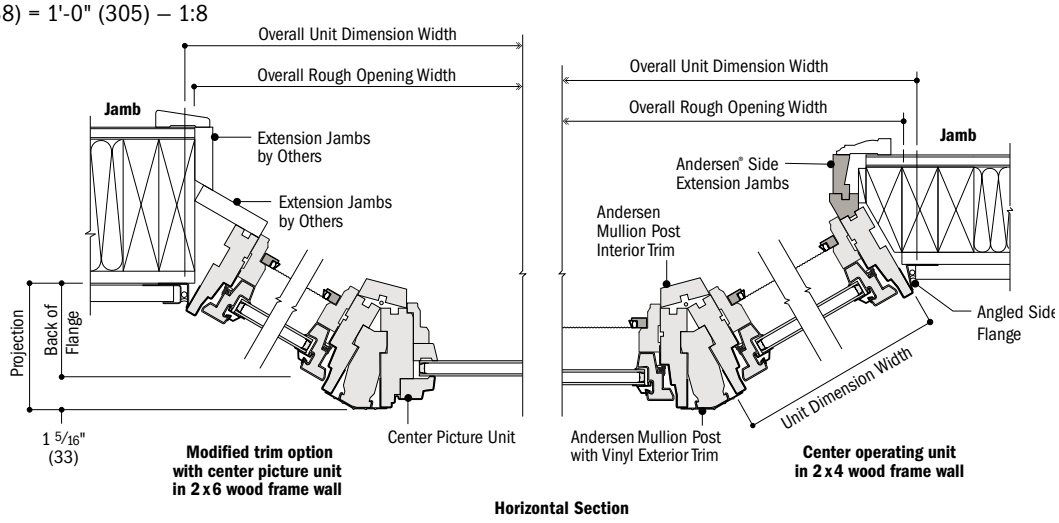

Horizontal Section

Detail for Casement 45° Bay Windows

Scale 1 1/2" (38) = 1'-0" (305) – 1:8

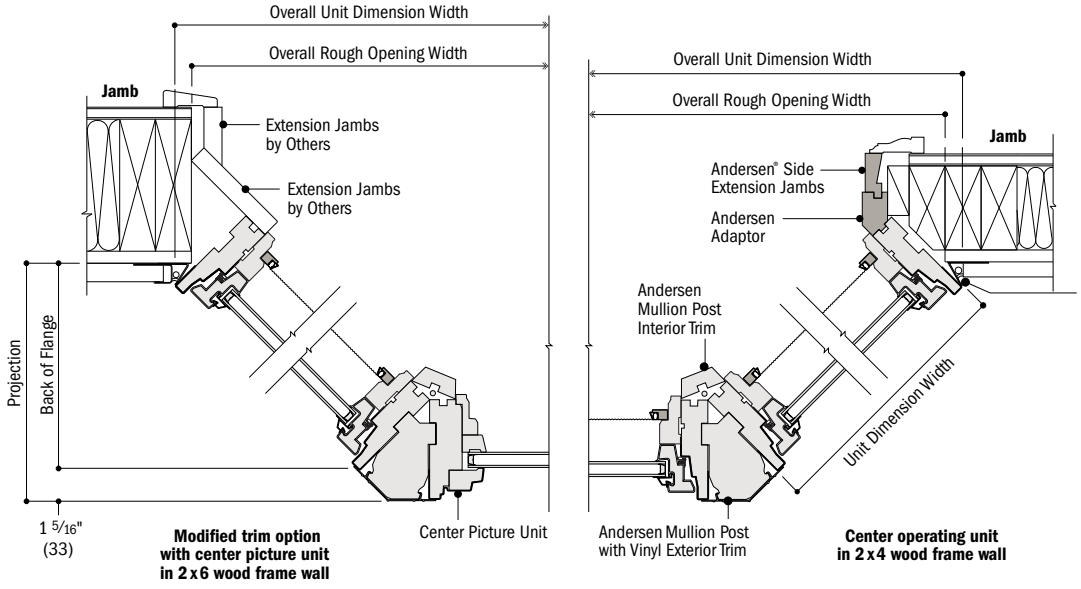

Horizontal Section

Detail for Casement 10° Bow Windows

Scale 1 1/2" (38) = 1'-0" (305) – 1:8

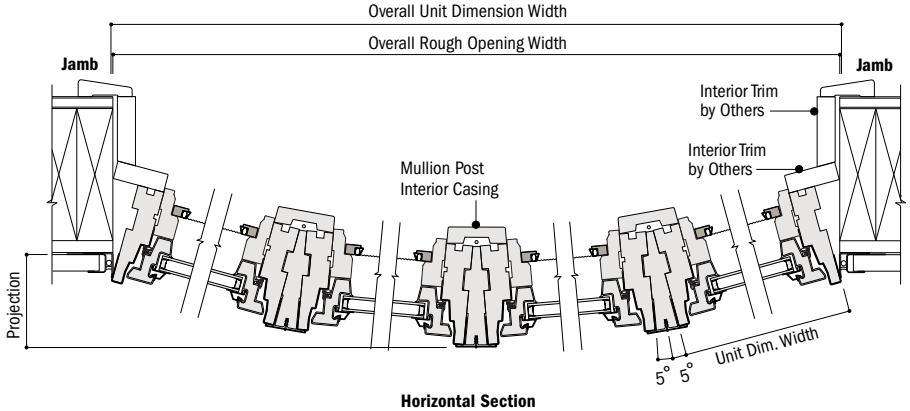

Horizontal Section

- Light-colored areas are parts included with window. Dark-colored areas are additional Andersen® parts required to complete window assembly as shown.
- **Minimum rough openings may need to be increased to allow for use of building wraps, flashing, sill panning, brackets, fasteners or other items. See installation information on pages 222-223.**
- Details are for illustration only and are not intended to represent product installation methods or materials. Refer to unit installation guides at andersenwindows.com.
- Dimensions in parentheses are in millimeters.

Details for Casement 90° Bay Windows

Scale 1 1/2" (38) = 1'-0" (305) – 1:8

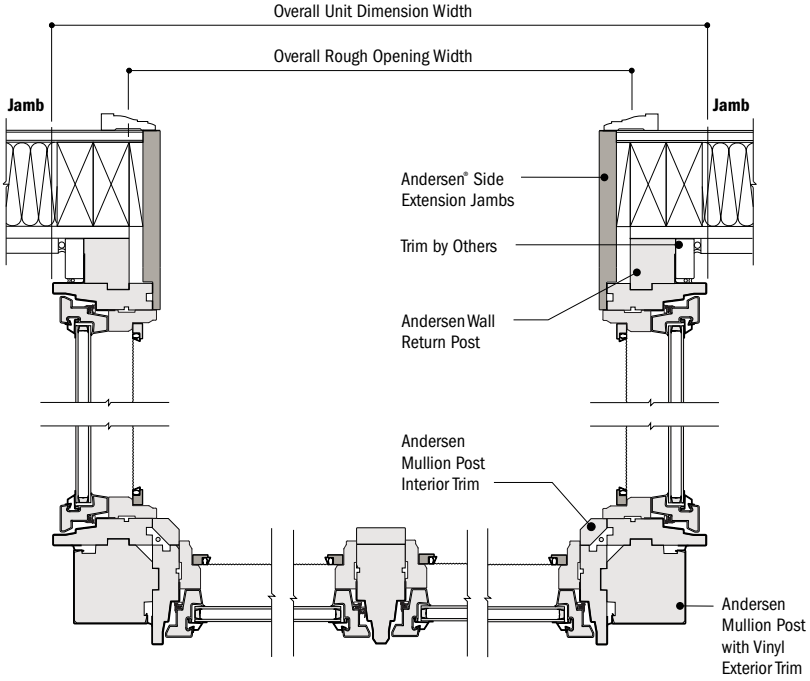

Horizontal Section
Center Venting Window

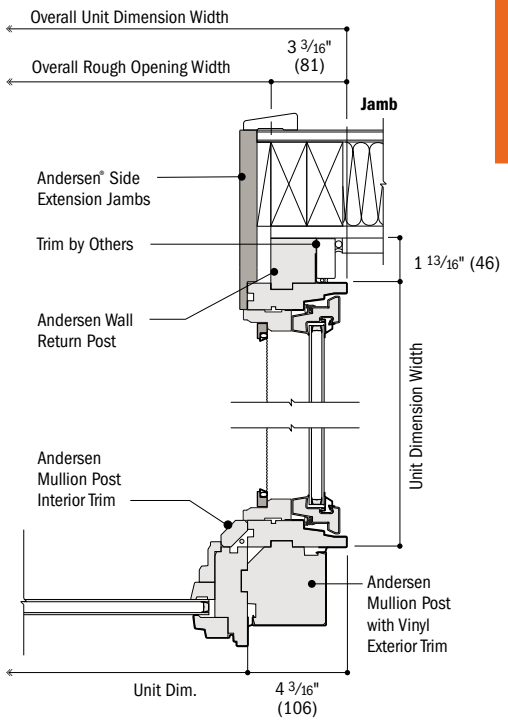

Horizontal Section
Center Picture Window

Detail for Casement Bay and Bow Windows

Scale 1 1/2" (38) = 1'-0" (305) – 1:8

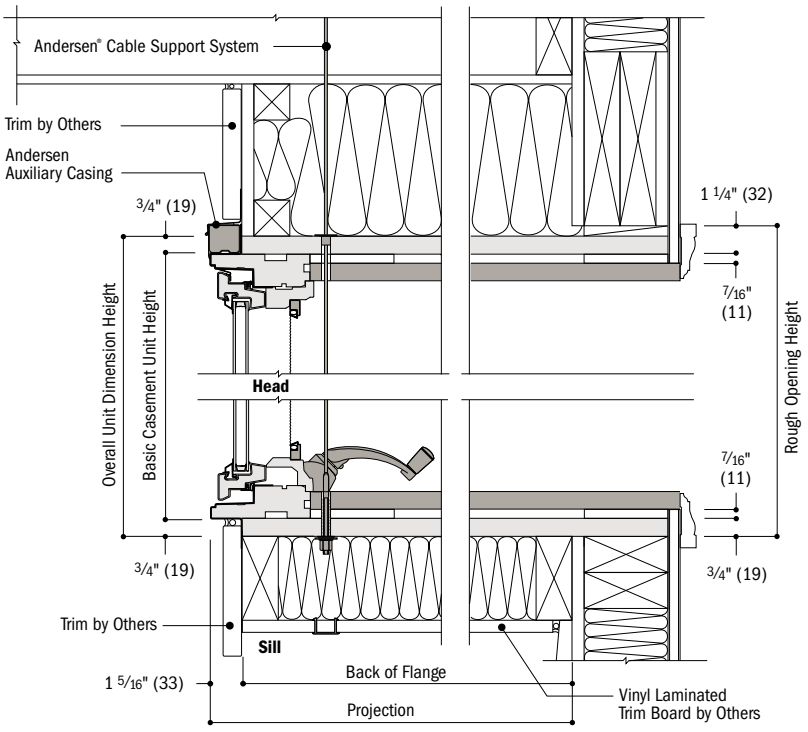

Vertical Section

- Light-colored areas are parts included with window. Dark-colored areas are additional Andersen® parts required to complete window assembly as shown.
- **Minimum rough openings may need to be increased to allow for use of building wraps, flashing, sill panning, brackets, fasteners or other items. See installation information on pages 222-223.**
- Details are for illustration only and are not intended to represent product installation methods or materials. Refer to unit installation guides at andersenwindows.com.
- Dimensions in parentheses are in millimeters.

Sizing for Double-Hung Bay Windows

30° and 45° bay windows are available in a variety of standard-size 400 Series tilt-wash or Woodwright® double-hung window configurations, covering widths in approximately 4" (102) increments between the minimum and maximum total widths.

Double-Hung 30° and 45° Bay Windows

Order Description Examples

Picture With Double-Hung Flankers

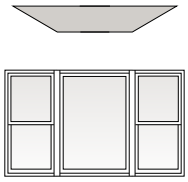

30BAY TW2042-DHP3042-TW2042

30° Bay
45° Bay
Double-Hung Flanker Size
Picture Size (single or joined combination)
Double-Hung Flanker Size

Double-Hung With Double-Hung Flankers

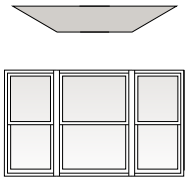

30BAY TW2042-TW3042-TW2042

30° Bay
45° Bay
Double-Hung Flanker Size
Double-Hung Size (single or joined combination)
Double-Hung Flanker Size

Picture With Picture Flankers

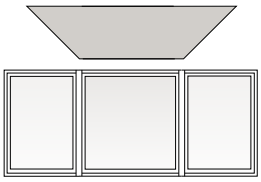

45BAY DHP3042-DHP4242-DHP3042

30° Bay
45° Bay
Picture Flanker Size
Picture Size (single or joined combination)
Picture Flanker Size

Double-Hung With Picture Flankers

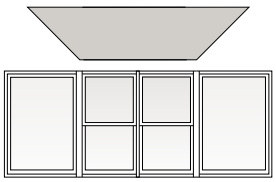

45BAY DHP3042-(TW2442-2)-DHP3042

30° Bay
45° Bay
Picture Flanker Size
Double-Hung Size (single or joined combination)
Picture Flanker Size

Design Criteria

- Minimum and maximum number of units: 3-4
- Flankers (last window on each end of combination) must be of equal size
- Flankers (last window on each end of combination) must be single units
- Center units can be single units, or joined combinations of double-hung units or double-hung picture units
- Center units used in joined combinations must be of equal size

MINIMUM AND MAXIMUM WINDOW WIDTH

Window Configuration	Minimum and Maximum Window Width Dimensions
30° Bay	5'-4 7/8" (1648) to 12'-0 1/4" (3664)
45° Bay	5'-0 1/2" (1537) to 12'-0 7/8" (3680)

WINDOW HEIGHT

Window Number	Window Dimension Height	Minimum Rough Opening Height
TWXX210, **WDH**XX210	3'-2 1/4" (972)	3'-2 3/4" (984)
TWXX32, **WDH**XX32	3'-6 1/4" (1086)	3'-6 3/4" (1086)
TWXX36, **WDH**XX36	3'-10 1/4" (1187)	3'-10 3/4" (1187)
TWXX310, **DHP**XX310, **WDH**XX310, **WPW**XX310	4'-2 1/4" (1276)	4'-2 3/4" (1289)
TWXX42, **DHP**XX42, **WDH**XX42, **WPW**XX42	4'-6 1/4" (1378)	4'-6 3/4" (1391)
TWXX46, **DHP**XX46, **WDH**XX46, **WPW**XX46	4'-10 1/4" (1480)	4'-10 3/4" (1492)
TWXX410, **DHP**XX410, **WDH**XX410, **WPW**XX410	5'-2 1/4" (1581)	5'-2 3/4" (1594)
TWXX52, **DHP**XX52, **WDH**XX52, **WPW**XX52	5'-6 1/4" (1683)	5'-6 3/4" (1695)
TWXX56, **DHP**XX56, **WDH**XX56, **WPW**XX56	5'-10 1/4" (1784)	5'-10 3/4" (1797)
TWXX510, **DHP**XX510, **WDH**XX510, **WPW**XX510	6'-2 1/4" (1886)	6'-2 3/4" (1899)
TWXX62, **DHP**XX62, **WDH**XX62, **WPW**XX62	6'-6 1/4" (1988)	6'-6 3/4" (2000)

Projection Dimensions

Projection dimension is dependent on the flanker window width along with the bay angle.

Tilt-Wash Double-Hung Flanker Window Number	**TW**18XX	**TW**20XX	**TW**24XX	**TW**26XX	**TW**28XX	**TW**210XX	**TW**30XX	**TW**34XX	**TW**38XX		
Tilt-Wash Picture Flanker Window Number							**DHP**30XX	**DHP**34XX		**DHP**310XX	**DHP**42XX
Woodwright® Double-Hung Flanker Window Number	**WW**18XX	**WW**20XX	**WW**24XX	**WW**26XX	**WW**28XX	**WW**210XX	**WW**30XX	**WW**34XX	**WW**38XX		
Woodwright Picture Flanker Window Number							**WPW**30XX	**WPW**34XX		**WPW**310XX	**WPW**42XX
30° Bay	12 3/4" (324)	14 3/4" (375)	16 3/4" (425)	17 3/4" (451)	18 3/4" (476)	19 3/4" (502)	20 3/4" (527)	22 3/4" (578)	24 3/4" (629)	25 9/16" (649)	–
45° Bay	17 15/16" (456)	20 3/4" (527)	23 9/16" (598)	25" (635)	26 7/16" (672)	27 13/16" (706)	29 1/4" (743)	32 1/16" (814)	34 7/8" (886)	36 1/8" (918)	38 15/16" (989)

⚠ WARNING

Proper support of projecting bay windows is required, see installation instructions. Failure to do so may result in injury, product or property damage.

- Window Dimension always refers to outside frame-to-frame dimension.
- **Minimum Rough Opening dimensions may need to be increased to allow for use of building wraps, flashing, sill panning, brackets, fasteners or other items. See pages 222-223 for more details.**
- Projection Dimension refers to outside of exterior sheathing to outer edge of window.
- One Andersen® cable kit, with two cables, is included with unit for proper installation. Each cable supports a maximum load of 500 lbs/227 kgs; additional support is necessary for loads exceeding 1,000 lbs/454 kgs.
- Bay windows include only basic unit. Roof and other installation materials provided by other manufacturers.
- For walkout bay window details and installation guidelines, contact your Andersen supplier.
- Dimensions in parentheses are in millimeters.

Details for Double-Hung 30° Bay Windows

Scale 1 1/2" (38) = 1'-0" (305) – 1:8

Woodwright® double-hung 30° bay window shown. Tilt-wash double-hung 30° bay window installation is similar.

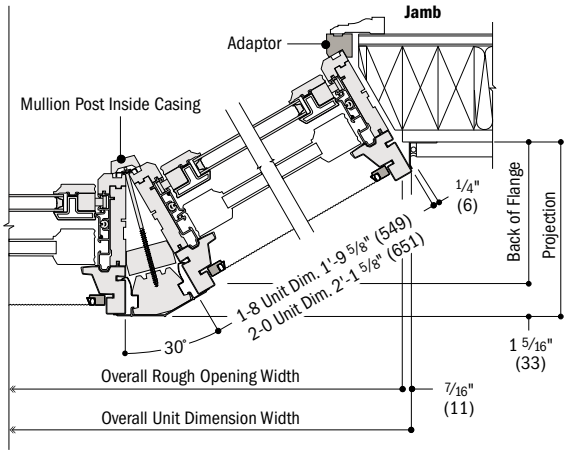

Horizontal Section

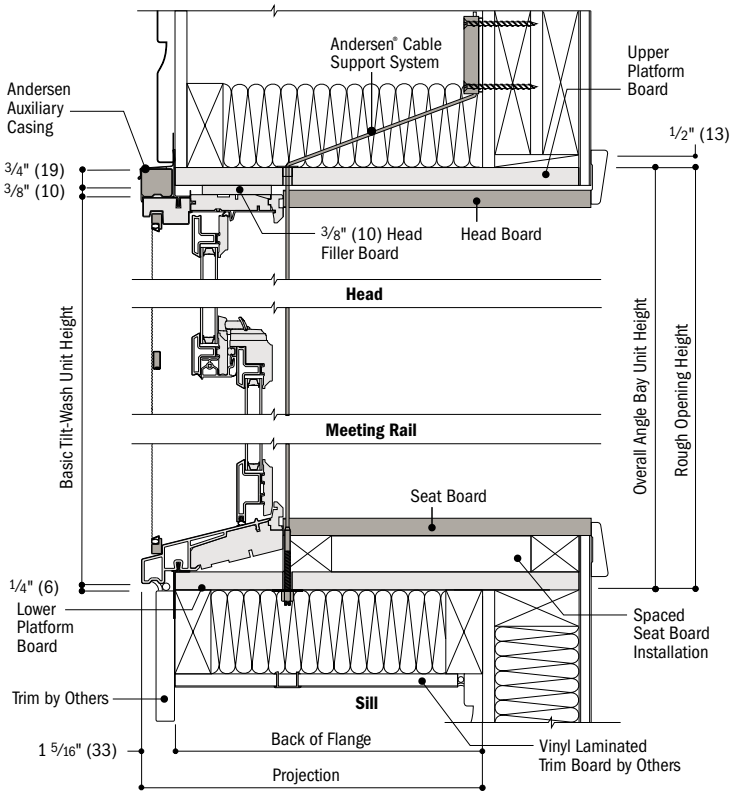

Vertical Section

Details for Double-Hung 45° Bay Windows

Scale 1 1/2" (38) = 1'-0" (305) – 1:8

Tilt-wash double-hung 45° bay window shown. Woodwright double-hung 45° bay window installation is similar.

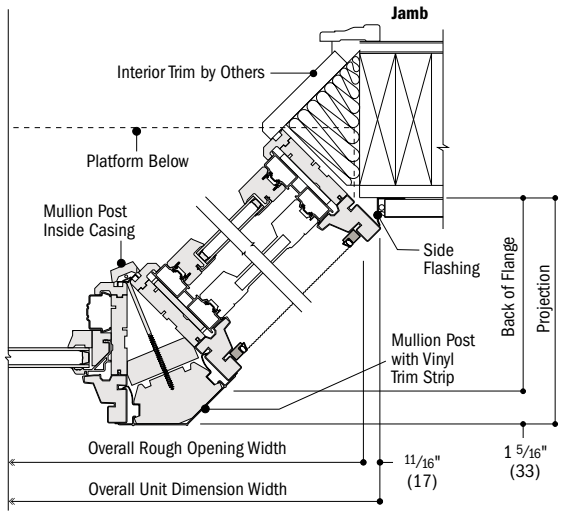

Horizontal Section

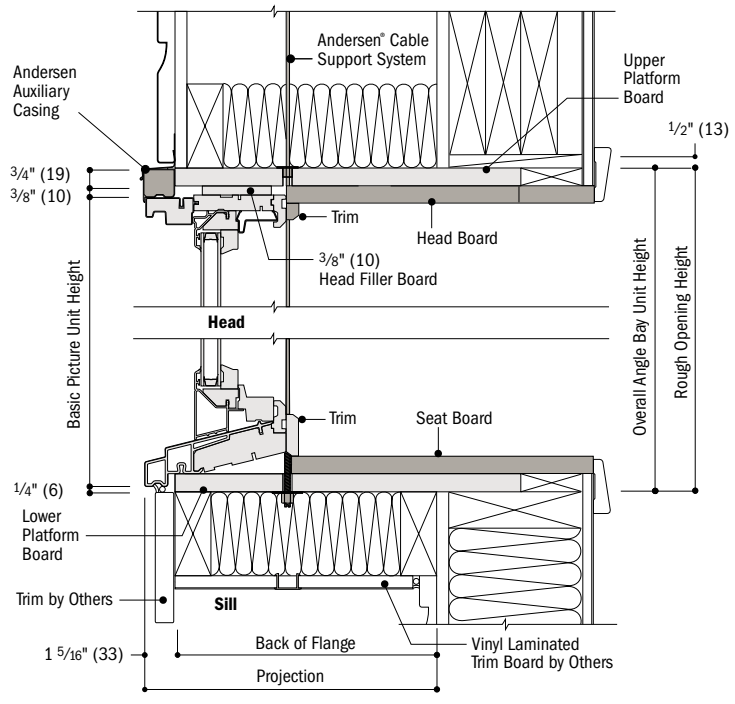

Vertical Section

- Light-colored areas are parts included with window. Dark-colored areas are additional Andersen® parts required to complete window assembly as shown.
- **Minimum rough openings may need to be increased to allow for use of building wraps, flashing, sill panning, brackets, fasteners or other items. See installation information on pages 222-223.**
- Details are for illustration only and are not intended to represent product installation methods or materials. Refer to unit installation guides at andersenwindows.com.
- Dimensions in parentheses are in millimeters.

NOTES



GLIDING WINDOWS

Table of Sizes 116
Specifications 117
Grille Patterns 117
Window Details 118
Product Performance 199

FEATURES

FRAME

Ⓐ The exterior of the frame is covered with fiberglass to maintain an attractive appearance while minimizing maintenance.

Ⓑ Wood frame members are treated with a water-repellent preservative for long-lasting* protection and performance.

Ⓒ Flexible bulb weatherstrip and spring-tension vinyl are installed at the factory, and help provide a tight seal between the sash and frame.

Ⓓ Fold-out-and-lock installation flanges accommodate 4 ½" (114) and 4 ⅛" (105) wall construction.

SASH

Ⓔ For improved ventilation, both sash are operable. Rigid vinyl encases the entire sash. A vinyl weld protects each sash corner for superior weathertightness to maintain an attractive appearance and minimize maintenance.

Ⓕ Natural wood sash members help provide excellent structural stability and energy efficiency.

Ⓖ Sash interiors are available in unfinished pine, or low-maintenance prefinished white or Sandtone. Matching interiors are also available for Terratone, dark bronze and black exteriors.

Delrin® Glides



Teflon®-infused Delrin glides are self-lubricating and require only 8 lbs/3.6 kgs of force to operate. A stainless steel spring within the glide provides years* of reliable operation – even in harsh environments.

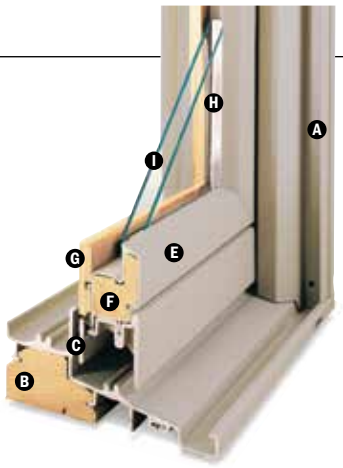

GLASS

Ⓗ Glass spacers are available in black, stainless steel and white.

Ⓘ High-Performance glass options include:

- Low-E4® glass
- Low-E4 HeatLock® glass
- Low-E4 SmartSun™ glass
- Low-E4 SmartSun HeatLock glass
- Low-E4 Sun glass
- Low-E4 PassiveSun® HeatLock glass

Tempered and other glass options are available. Contact your Andersen supplier.

A removable translucent film helps shield the glass from damage during delivery and construction, and simplifies finishing at the job site.

Patterned Glass

Patterned glass options are available. See page 11 for more details.

HARDWARE

Locking System

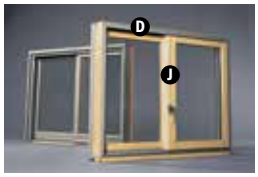

Ⓙ For an added measure of security and increased weathertightness, the locking system pulls the sash firmly closed while pushing the sash tight to the side jambs. This lock is a single-point on 2' (610)-tall windows, two-point on 3' (914)-tall windows, and three-point on 3'-6" (1067)-, 4' (1219)- and 5' (1524)-tall windows.

EXTERIORS & INTERIORS

EXTERIOR COLORS

White | Canvas | Sandtone | Terratone

Dark Bronze | Forest Green | Black

INTERIOR OPTIONS

Pine | White | Sandtone

Terratone** | Dark Bronze** | Black**

HARDWARE Sold Separately



Rotating Sash Handle

Antique Brass | Black | Bright Brass
Distressed Bronze | Distressed Nickel
Oil Rubbed Bronze | Satin Nickel
Stone | **White**

Bold name denotes finish shown.

HARDWARE FINISHES

Antique Brass | Black | Bright Brass | Distressed Bronze† | Distressed Nickel

Oil Rubbed Bronze† | Satin Nickel | Stone | White

*Visit andersenwindows.com/warranty for details.
**Terratone, dark bronze and black interiors are only available with matching exteriors. Unfinished pine, white and Sandtone are available with all exterior colors.
†These finishes are "living finishes" that will change with time and use, see limited warranty for details.
"Delrin" and "Teflon" are registered trademarks of E.I. du Pont de Nemours and Company.
Naturally occurring variations in grain, color and texture of wood make each window one of a kind. All wood interiors are unfinished unless a finish is specified.
Printing limitations prevent exact replication of colors and finishes. See your Andersen supplier for actual color and finish samples.
Dimensions in parentheses are in millimeters.

ACCESSORIES Sold Separately

FRAME

Extension Jambs



The base jamb depth is 4 9/16" (116). Extension jambs are available in unfinished pine, maple and oak, or prefinished white, dark bronze and black. Some sizes may be veneered.

Factory-applied and non-applied interior extension jambs are available in 1/16" (1.5) increments between 5 1/16" (129) and 7 1/8" (181).

HARDWARE

Passive Sash Handle



Attaches to the passive sash to aid in operation. Available in Sandtone.

Window Opening Control Device



A window opening control device is available, which limits sash travel to less than 4" (102) when the window is first opened. Available factory applied, or as a field-applied kit in stone or white. Device shown above is on a 200 Series gliding window.

INSECT SCREENS

Choose a fixed full insect screen or a gliding pass-through insect screen. Frames are available in colors to match the product exteriors.

TruScene® Insect Screens

Our TruScene insect screens let in over 25% more fresh air* and provide 50% greater clarity than conventional Andersen® insect screens, all while keeping out unwanted small insects.

Conventional Insect Screens

Conventional insect screens have charcoal gray powder-coated aluminum screen mesh.

GRILLES

Grilles are available in a variety of configurations and widths. See page 18 for details.

EXTERIOR TRIM

Available with Andersen exterior trim. See the Exterior Trim section starting on page 177.

CAUTION: Painting and staining may cause damage to rigid vinyl. Andersen does not warrant the adhesion or performance of homeowner-applied paint over vinyl or other factory-coated surfaces. For vinyl painting instructions and preparation, contact your Andersen supplier. Do not paint weatherstrip. Creosote-based stains should not come in contact with Andersen products. Abrasive cleaners or solutions containing corrosive solvents should not be used on Andersen products. See page 223 for a complete list of cautions.

*TruScene insect screens let in over 25% more fresh air than standard Andersen fiberglass insect screens.
Dimensions in parentheses are in millimeters.

Table of Sizes for Gliding Windows

Scale 1/8" (3) = 1'-0" (305) – 1:96

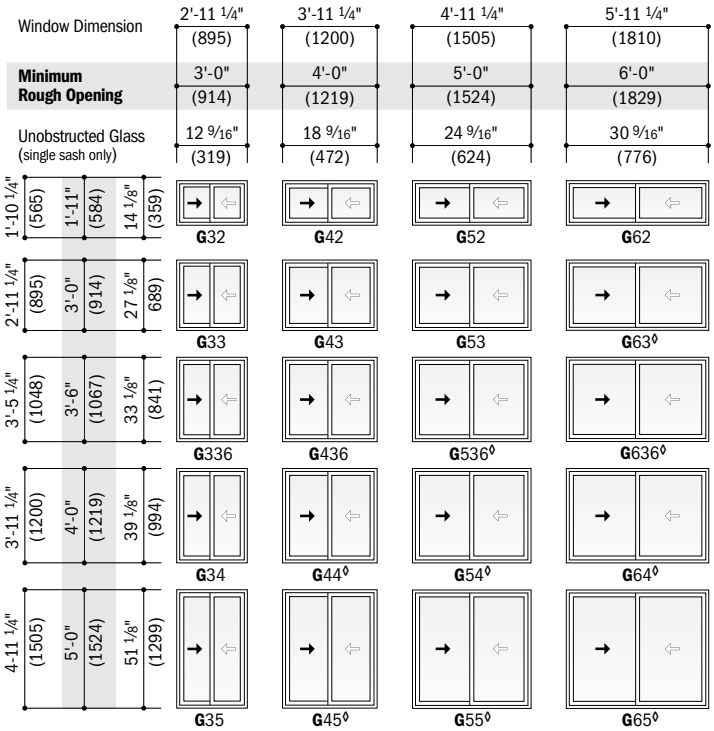

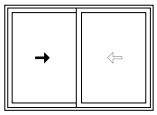

Active Passive

Viewed from the exterior. Passive sash will open after active sash has been opened.

Grille patterns shown on page 117.

Details shown on page 118.

• Window Dimension always refers to outside frame-to-frame dimension.

• Minimum Rough Opening dimensions may need to be increased to allow for use of building wraps, flashing, sill panning, brackets, fasteners or other items. See pages 222-223 for more details.

• Dimensions in parentheses are in millimeters.

◊Meets or exceeds clear opening area of 5.7 sq. ft. or 0.53 m², clear opening width of 20" (508) and clear opening height of 24" (610). See table on page 117.

Handle Location

Dimensions shown are from the top of handle in an open position. Calculations are based on installation with the bottom of the header height at 6'-10 1/2" (2096) from the top of the subfloor.

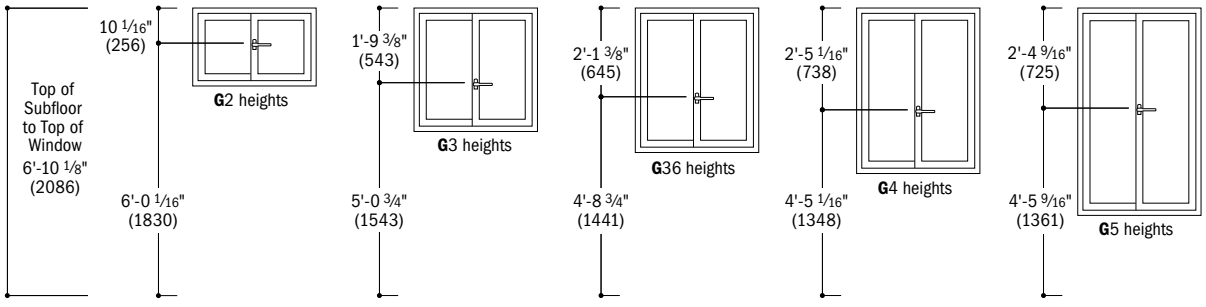

• Dimensions in parentheses are in millimeters.

Opening and Area Specifications for Gliding Windows

Window Number	Clear Opening Area Sq. Ft./(m²)	Clear Opening in Full Open Position Width Inches/(mm)	Clear Opening in Full Open Position Height Inches/(mm)	Glass Area Sq. Ft./(m²)	Vent Area Sq. Ft./(m²)	Top of Subfloor to Top of Sill Parting Stop Inches/(mm)	Overall Window Area Sq. Ft./(m²)
G32	1.70 (0.16)	14 9/32" (363)	17 1/8" (435)	2.5 (0.23)	1.70 (0.16)	62 9/16" (1589)	5.45 (0.51)
G33	3.00 (0.28)	14 9/32" (363)	30 1/8" (765)	4.7 (0.44)	3.00 (0.28)	49 9/16" (1259)	8.63 (0.80)
G336	3.58 (0.33)	14 9/32" (363)	36 1/8" (918)	5.7 (0.53)	3.58 (0.33)	43 9/16" (1107)	10.10 (0.94)
G34	4.18 (0.39)	14 9/32" (363)	42 1/8" (1070)	6.8 (0.63)	4.18 (0.39)	37 9/16" (954)	11.57 (1.08)
G35	5.40 (0.50)	14 9/32" (363)	54 1/8" (1375)	8.9 (0.83)	5.40 (0.50)	25 9/16" (649)	14.50 (1.35)
G42	2.40 (0.22)	20 9/32" (515)	17 1/8" (435)	3.6 (0.33)	2.40 (0.22)	62 9/16" (1589)	7.30 (0.68)
G43	4.40 (0.41)	20 9/32" (515)	30 1/8" (765)	7.0 (0.65)	4.40 (0.41)	49 9/16" (1259)	11.57 (1.08)
G436	5.10 (0.47)	20 9/32" (515)	36 1/8" (918)	8.5 (0.79)	5.10 (0.47)	43 9/16" (1107)	13.54 (1.26)
G44 ◊	6.00 (0.56)	20 9/32" (515)	42 1/8" (1070)	10.0 (0.93)	6.00 (0.56)	37 9/16" (954)	15.50 (1.44)
G45 ◊	7.62 (0.71)	20 9/32" (515)	54 1/8" (1375)	13.1 (1.22)	7.62 (0.71)	25 9/16" (649)	19.44 (1.81)
G52	3.13 (0.29)	26 9/32" (668)	17 1/8" (435)	4.8 (0.45)	3.13 (0.29)	62 9/16" (1589)	9.15 (0.85)
G53	5.50 (0.51)	26 9/32" (668)	30 1/8" (765)	9.2 (0.86)	5.50 (0.51)	49 9/16" (1259)	14.50 (1.35)
G536 ◊	6.60 (0.61)	26 9/32" (668)	36 1/8" (918)	11.3 (1.05)	6.60 (0.61)	43 9/16" (1107)	16.97 (1.58)
G54 ◊	7.70 (0.72)	26 9/32" (668)	42 1/8" (1070)	13.3 (1.24)	7.70 (0.72)	37 9/16" (954)	19.44 (1.81)
G55 ◊	9.90 (0.92)	26 9/32" (668)	54 1/8" (1375)	17.4 (1.62)	9.90 (0.92)	25 9/16" (649)	24.38 (2.27)
G62	3.84 (0.36)	32 9/32" (820)	17 1/8" (435)	6.0 (0.56)	3.84 (0.36)	62 9/16" (1589)	11.01 (1.02)
G63 ◊	6.75 (0.63)	32 9/32" (820)	30 1/8" (765)	11.5 (1.07)	6.75 (0.63)	49 9/16" (1259)	17.44 (1.62)
G636 ◊	8.10 (0.75)	32 9/32" (820)	36 1/8" (918)	14.0 (1.30)	8.10 (0.75)	43 9/16" (1107)	20.41 (1.90)
G64 ◊	9.44 (0.88)	32 9/32" (820)	42 1/8" (1070)	16.6 (1.54)	9.44 (0.88)	37 9/16" (954)	23.38 (2.17)
G65 ◊	12.13 (1.13)	32 9/32" (820)	54 1/8" (1375)	21.7 (2.02)	12.13 (1.13)	25 9/16" (649)	29.32 (2.72)

• Top of Subfloor to Top of Inside Sill Stop is calculated based upon a structural header height of 6'-10 1/2" (2096).
• Dimensions in parentheses are in millimeters or square meters.
◊Meets or exceeds clear opening area of 5.7 sq. ft. or 0.53 m², clear opening width of 20" (508) and clear opening height of 24" (610).

Grille Patterns

	Prairie A	Colonial	Modified Colonial	Modified Colonial with Simulated Meeting Rail	Tall Fractional	Tall Fractional with Simulated Meeting Rail	Short Fractional	Short Fractional with Simulated Meeting Rail
Gliding	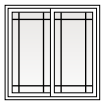	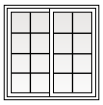						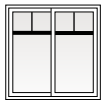

Number of lights and overall pattern varies with window size. Patterns may not be available in all configurations or sizes. Specified equal light and custom patterns are also available. For more grille options, see page 18 or visit **andersenwindows.com/grilles**.

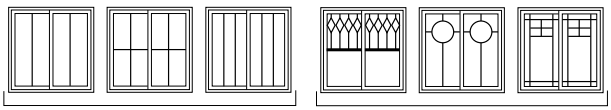

Specified Equal Light Examples

Custom Pattern Examples

Details for Gliding Windows

Scale 1 1/2" (38) = 1'-0" (305) – 1:8

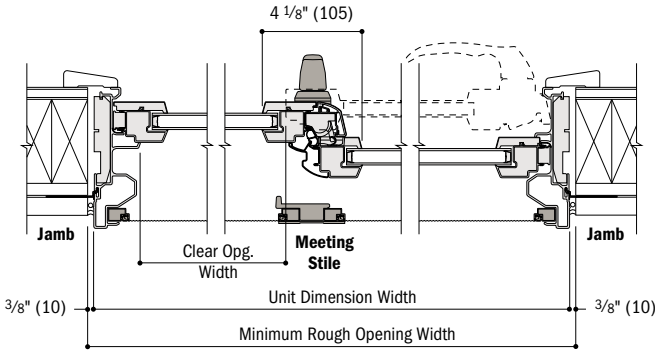

Horizontal Section

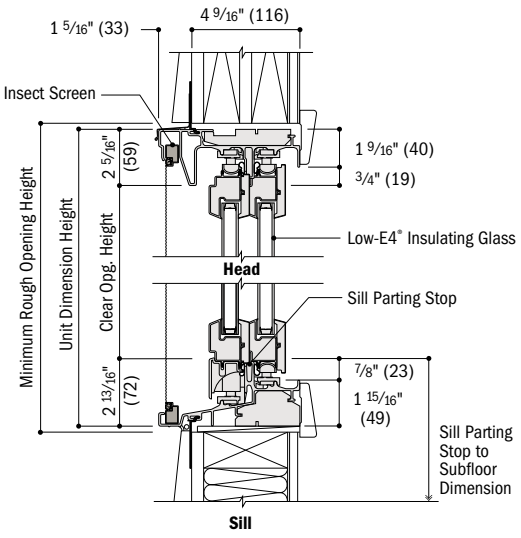

Vertical Section

Separate Rough Openings Detail

Scale 1 1/2" (38) = 1'-0" (305) – 1:8

To meet structural requirements or to achieve a wider joined appearance, windows may be installed into separate rough openings having vertical support by others in combination with Andersen® exterior filler and exterior vinyl trim.

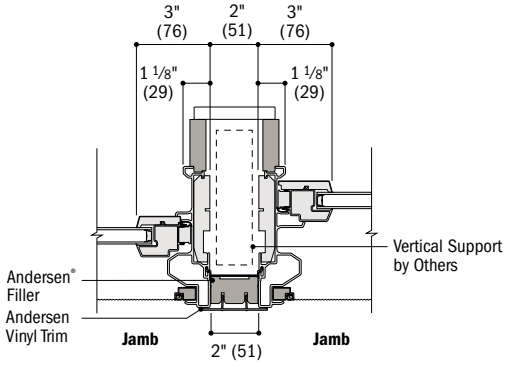

Horizontal Section
Gliding and Gliding

- Light-colored areas are parts included with window. Dark-colored areas are additional Andersen® parts required to complete window assembly as shown.
- **Minimum rough openings may need to be increased to allow for use of building wraps, flashing, sill panning, brackets, fasteners or other items. See installation information on pages 222-223.**
- Details are for illustration only and are not intended to represent product installation methods or materials. Refer to product installation guides at andersenwindows.com.
- Consult with an architect or structural engineer regarding minimum requirements for structural support members between adjacent rough openings.
- Dimensions in parentheses are in millimeters.



SPECIALTY WINDOWS

Half Circle, Quarter Circle, Elliptical, Circle, Oval, Extended Gothic, Octagon, Monumental Quarter Circle, Monumental Circle & Eyebrow Windows

- Tables of Sizes 122-125
- Specifications 123, 125
- Grille Patterns 125
- Window Details 126-127
- Joining Details 128

Custom Arch Windows 129

Arch, Springline™ & Springline Flanker Windows

- Tables of Sizes 130-135
- Specifications 131, 133
- Grille Patterns 134
- Window Details 135

Flexiframe® Windows

- Shapes & Custom Sizes 136
- Window Details 137
- Joining Details 137-138

Combination Designs 183

Product Performance 199

CUSTOM SIZING
in ⅛" (3) increments

CUSTOM SIZES

Dimensions in parentheses are in millimeters.

FEATURES

FRAME

Ⓐ Wood frame members are treated with a water-repellent preservative for long-lasting* protection and performance. Radii are laminated pine, offering improved strength and appearance.

Ⓑ The lineal sections of the jamb and sill on extended gothic, octagon, monumental quarter circle, monumental circle, eyebrow, arch and Flexiframe windows are covered with a low-maintenance fiberglass-reinforced composite. The arched head members and Springline windows are covered with stretch-formed aluminum.

Ⓒ The vinyl installation flange on extended gothic, octagon, monumental quarter circle, monumental circle, eyebrow, arch, Springline and Flexiframe windows extends 1 ¼" (32) around the entire perimeter of the unit to help seal the unit to the structure.

Ⓓ Half circle, quarter circle, elliptical, circle and oval windows are covered with a rigid vinyl cladding. Low-maintenance exterior cladding provides long-lasting* beauty.

Ⓔ Rigid vinyl cladding on half circle, quarter circle, elliptical, circle and oval window frames forms a full-perimeter installation flange for securing the unit to the structure. It also helps maintain an attractive appearance while minimizing maintenance.

Ⓕ Interior trim stops are unfinished pine. Arched interior trim stops are quality full-length laminated pine. Traditional or contemporary interior trim stops are available for Flexiframe windows. Matching contemporary grilles are available for Flexiframe windows with contemporary stops.

Windows are shipped with the interior trim stops tacked on, so removal is easy – expediting finishing and joining procedures.

Ⓖ Unfinished interior wood glass stops help secure the glass in place. Arched glass stops are full-length laminated pine.

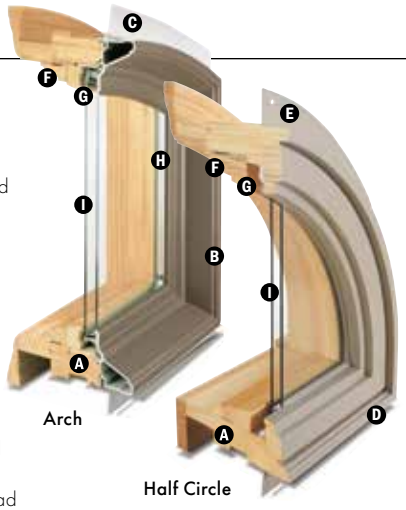

Arch

Half Circle

GLASS

Ⓗ Glass spacers are available in black, stainless steel and white.

Ⓘ High-Performance glass options include:

- Low-E4® glass
- Low-E4 HeatLock® glass
- Low-E4 SmartSun™ glass
- Low-E4 SmartSun HeatLock glass
- Low-E4 Sun glass
- Low-E4 PassiveSun® HeatLock glass

Tempered and other glass options are available. Contact your Andersen supplier.

A removable translucent film helps shield the glass from damage during delivery and construction, and simplifies finishing at the job site.

Patterned Glass

Patterned glass options are available. See page 11 for more details.

PERFORMANCE OPTIONS

Coastal Windows

Most 400 Series specialty windows are available with Stormwatch® Protection. For more information, visit **andersenwindows.com/coastal** or refer to the Andersen 400 Series Coastal Product Guide for more information.

StormWATCH PROTECTION

EXTERIORS & INTERIORS

EXTERIOR COLORS



White | Canvas | Sandtone | Terratone

Dark Bronze | Forest Green | Black

INTERIOR OPTIONS

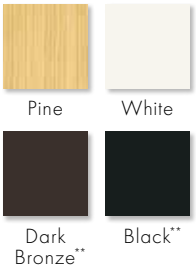

Pine | White

Dark Bronze** | Black**



Circle/Oval



Springline™



Flexiframe®

Traditional interior trim stops are shown. Also available with contemporary trim stops.

*Visit andersenwindows.com/warranty for details.

**Products with dark bronze and black interiors have matching exteriors.

Naturally occurring variations in grain, color and texture of wood make each window one of a kind. All wood interiors are unfinished unless a finish is specified. Printing limitations prevent exact replication of colors. See your Andersen supplier for actual color samples.

Dimensions in parentheses are in millimeters.

ACCESSORIES Sold Separately

FRAME

Extension Jambs

Specify extension jambs when ordering.

The base jamb depth is 2 7/8" (73), except for double-hung half circle and elliptical windows, which have a 4 1/2" (114) base jamb depth. Available in unfinished pine, maple and oak.

Extension jambs are available for most products in 1/16" (1.5) increments between 4 9/16" (116) and 7 1/8" (181). Double-hung half circle and elliptical window extension jambs are available between 5 1/16" (129) and 7 1/8" (181). Some sizes may be veneered.

Springline™ window extension jambs and transition blocks are factory applied when ordered with the window. For windows with a 48" (1219) radius, a key component block is also factory applied.

Extension Jamb Alignment for Joined Combinations

When joining 400 Series arch, Springline and Flexiframe® windows over casement windows, or when joining arch, Springline or Flexiframe windows alongside awning windows, use Method A or Method B for extension jamb alignment. See page 137 for details.

Method A: Individually Framed

Specify Andersen® auxiliary extension jambs when ordering. Available for 4 9/16" (116), 5 1/4" (133), 6 9/16" (167) and 7 1/8" (181) wall thicknesses.

Method B: Perimeter Framed

Specify 1/4" (6) filler in pine or white. Requires modification of extension jambs.

INTERIOR TRIM

Interior Arch Casing, Transition Blocks & Plinth Blocks

Interior arch casing is available in Colonial or Ranch styles, and comes with either transition blocks or plinth blocks depending on the product. Available in pine, maple and oak. For easy integration, and consistency, dimensions are consistent with the Moulding and Millwork Producers Association specifications.

Colonial- or Ranch-style arch casings are available in the widths provided below.



2 1/4" (57) Colonial style WM366



2 1/2" (64) Colonial style WM351



3 1/2" (89) Colonial style WM444



2 1/4" (57) Ranch style WM324
2 1/2" (64) Ranch style WM315



Transition blocks are included with arch casing depending on product type and provide a beautiful accent. Circle and oval windows come with two transition blocks.





Square or arch-shaped plinth blocks are included with arch casing depending on product type, and enhance casing transitions. Decorated with a radial sunburst on one side or use the flush face on the other side. The 2 7/8" (73) square plinth block is used with 2 1/4" (57)- and 2 1/2" (64)-wide arch casing, and the 3 7/8" (98) square plinth block is used with 3 1/2" (89)-wide arch casing. The 2 7/8" (73) x 4" (102) arch plinth block is used with 2 1/4" (57)- and 2 1/2" (64)-wide arch casing, or the 3 7/8" (98) x 5 1/4" (133) arch plinth block is used with 3 1/2" (89)-wide arch casing.

Key Blocks



Key block kits are available for circle and oval windows to create a unique trim design or accent instead of using transition blocks or plinth blocks. Kits include two key blocks and two key components. See pages 124 and 127 for details.

ANDERSEN® ART GLASS

Andersen art glass panels come in a variety of original patterns. For more information, see the Art Glass section starting on page 175 or visit andersenwindows.com/artglass.

GRILLES

Grilles are available in a variety of configurations and widths. See page 18 for details.

EXTERIOR TRIM

Available with Andersen exterior trim. See the Exterior Trim section starting on page 177.

CAUTION: Painting and staining may cause damage to rigid vinyl. Andersen does not warrant the adhesion or performance of homeowner-applied paint over vinyl or other factory-coated surfaces. For vinyl painting instructions and preparation, contact your Andersen supplier. Do not paint weatherstrip. Creosote-based stains should not come in contact with Andersen products. Abrasive cleaners or solutions containing corrosive solvents should not be used on Andersen products. See page 223 for a complete list of cautions.

Dimensions in parentheses are in millimeters.

Table of Sizes for Casement/Awning Half Circle Windows

Scale 1/8" (3) = 1'-0" (305) – 1:96

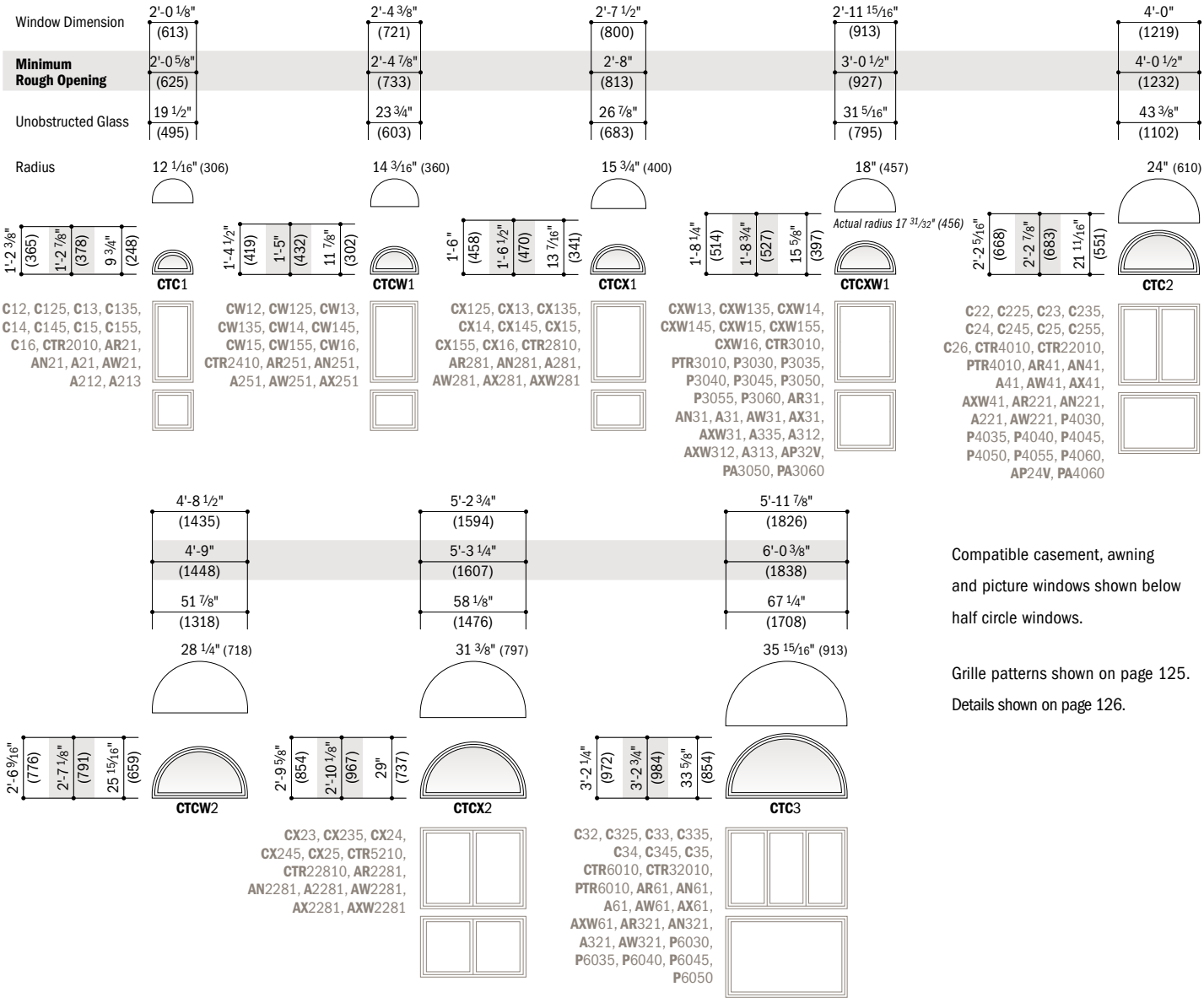

Compatible casement, awning and picture windows shown below half circle windows.

Grille patterns shown on page 125.

Details shown on page 126.

Table of Sizes for Quarter Circle Windows

Scale 1/8" (3) = 1'-0" (305) – 1:96

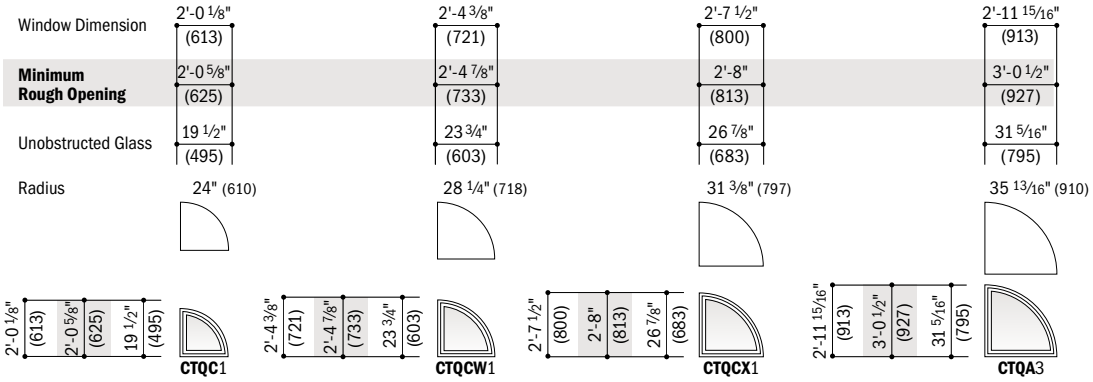

See alignment grid on pages 24-25 for combining quarter circle windows with other standard-size windows.

Grille patterns shown on page 125.

Details shown on page 126.

- Window Dimension always refers to outside frame-to-frame dimension.
- **Minimum Rough Opening dimensions may need to be increased to allow for use of building wraps, flashing, sill panning, brackets, fasteners or other items. See pages 222-223 for more details.**
- Dimensions in parentheses are in millimeters.

Table of Sizes for Double-Hung Half Circle Windows

Scale 1/8" (3) = 1'-0" (305) – 1:96

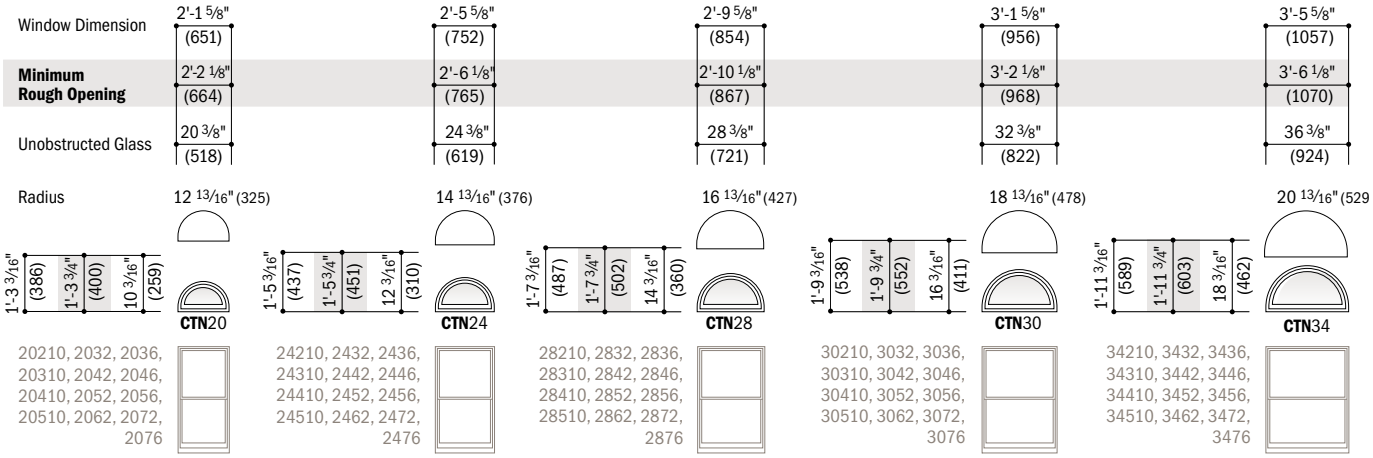

20210, 2032, 2036, 20310, 2042, 2046, 20410, 2052, 2056, 20510, 2062, 2072, 2076

24210, 2432, 2436, 24310, 2442, 2446, 24410, 2452, 2456, 24510, 2462, 2472, 2476

28210, 2832, 2836, 28310, 2842, 2846, 28410, 2852, 2856, 28510, 2862, 2872, 2876

30210, 3032, 3036, 30310, 3042, 3046, 30410, 3052, 3056, 30510, 3062, 3072, 3076

34210, 3432, 3436, 34310, 3442, 3446, 34410, 3452, 3456, 34510, 3462, 3472, 3476

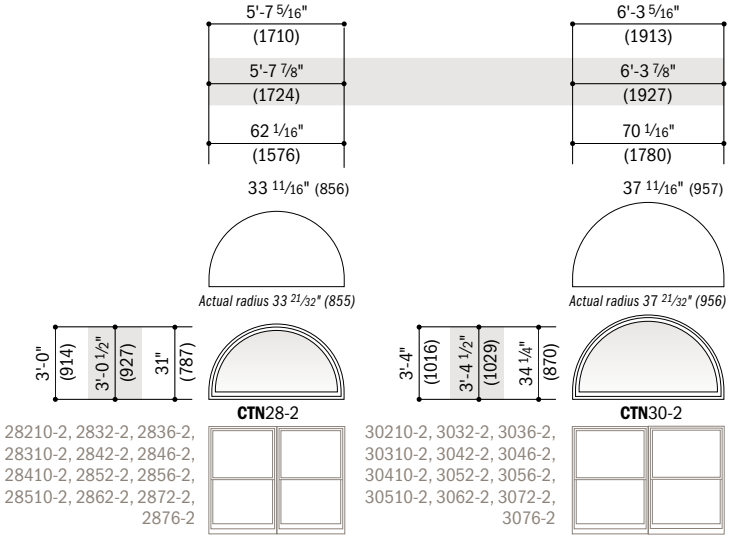

28210-2, 2832-2, 2836-2, 28310-2, 2842-2, 2846-2, 28410-2, 2852-2, 2856-2, 28510-2, 2862-2, 2872-2, 2876-2

30210-2, 3032-2, 3036-2, 30310-2, 3042-2, 3046-2, 30410-2, 3052-2, 3056-2, 30510-2, 3062-2, 3072-2, 3076-2

Compatible double-hung windows shown below half circle windows.

Grille patterns shown on page 125. Details shown on page 126.

Table of Sizes for Elliptical Windows

Scale 1/8" (3) = 1'-0" (305) – 1:96

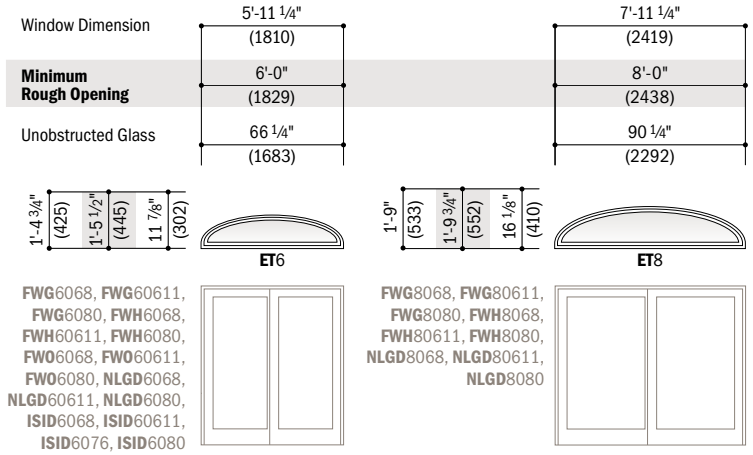

FWG6068, FWG60611, FWG6080, FWH6068, FWH60611, FWH6080, FWO6068, FWO60611, FWO6080, NLGD6068, NLGD60611, NLGD6080, ISID6068, ISID60611, ISID6076, ISID6080

FWG8068, FWG80611, FWG8080, FWH8068, FWH80611, FWH8080, NLGD8068, NLGD80611, NLGD8080

Compatible patio doors shown below elliptical windows.

Grille patterns shown on page 125. Details shown on page 127.

- Window Dimension always refers to outside frame-to-frame dimension.
- **Minimum Rough Opening dimensions may need to be increased to allow for use of building wraps, flashing, sill panning, brackets, fasteners or other items. See pages 222-223 for more details.**
- Dimensions in parentheses are in millimeters.

Area Specifications for Casement/ Awning Half Circle Windows

Window Number	Glass Area Sq. Ft./(m²)
CTC1	1.0 (0.09)
CTCW1	1.5 (0.14)
CTCXW1	2.7 (0.25)
CTC2	5.1 (0.47)
CTCW2	7.3 (0.68)
CTC3	12.3 (1.14)
CTCX1	2.0 (0.19)
CTCX2	9.3 (0.86)

- Dimensions in parentheses are in square meters.

Area Specifications for Double-Hung Half Circle Windows

Window Number	Glass Area Sq. Ft./(m²)
CTN20	1.1 (0.10)
CTN24	1.6 (0.15)
CTN28	2.2 (0.20)
CTN30	2.8 (0.26)
CTN34	3.6 (0.34)
CTN28-2	10.5 (0.98)
CTN30-2	13.4 (1.25)

- Dimensions in parentheses are in square meters.

Area Specifications for Quarter Circle Windows

Window Number	Glass Area Sq. Ft./(m²)
CTQC1	1.9 (0.18)
CTQCW1	3.0 (0.28)
CTQA3	5.2 (0.48)
CTQCX1	3.8 (0.35)

- Dimensions in parentheses are in square meters.

Area Specifications for Elliptical Windows

Window Number	Glass Area Sq. Ft./(m²)
ET6	4.3 (0.40)
ET8	8.0 (0.74)

- Dimensions in parentheses are in square meters.

SPECIALTY WINDOWS

Table of Sizes for Circle Windows

Scale 1/8" (3) = 1'-0" (305) – 1:96

Window Dimension	2'-0 1/8" (613)	2'-4 3/8" (721)	2'-11 15/16" (913)
Minimum Rough Opening	2'-0 5/8" (625)	2'-4 7/8" (733)	3'-0 1/2" (927)
Unobstructed Glass	19 3/4" (502)	24" (610)	31 9/16" (802)



CIR20 **CIR**24 **CIR**30

Circle, oval, extended gothic, octagon, monumental quarter circle, monumental circle and eyebrow specifications shown on page 125.

Grille patterns shown on page 125. Details shown on pages 126-127.

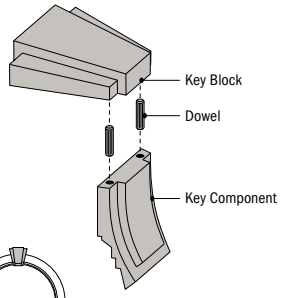

For circle and oval windows, Andersen® key block kits are available, and include two key blocks and two key components.

Table of Sizes for Oval Windows

Scale 1/8" (3) = 1'-0" (305) – 1:96

Window Dimension	1'-7 3/4" (502)	2'-0" (610)	3'-0" (914)
Minimum Rough Opening	1'-8 1/4" (514)	2'-0 1/2" (622)	3'-0 1/2" (927)
Unobstructed Glass	15 3/8" (391)	19 3/8" (492)	31 3/8" (797)

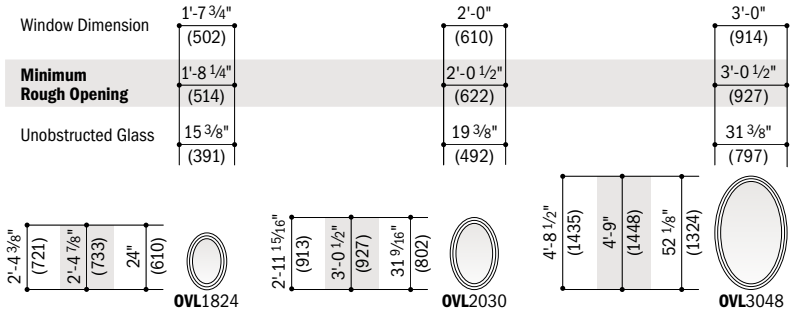

OVL1824 **OVL**2030 **OVL**3048

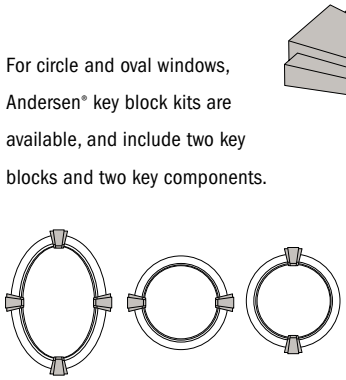

Oval windows can be installed in a vertical or horizontal orientation.



OVL1824 **OVL**2418

Table of Sizes for Extended Gothic Windows

Scale 1/8" = 1'-0" (1:96)

Window Dimension	2'-0 1/8" (613)	2'-4 3/8" (721)	2'-11 15/16" (913)	4'-0" (1219)
Minimum Rough Opening	2'-0 5/8" (625)	2'-4 7/8" (733)	3'-0 1/2" (927)	4'-0 1/2" (1232)
Unobstructed Glass	19 7/16" (495)	23 11/16" (602)	31 1/4" (794)	43 5/16" (110)
Radius	32 1/4" (819)	32 1/4" (819)	36" (914)	48" (1219)

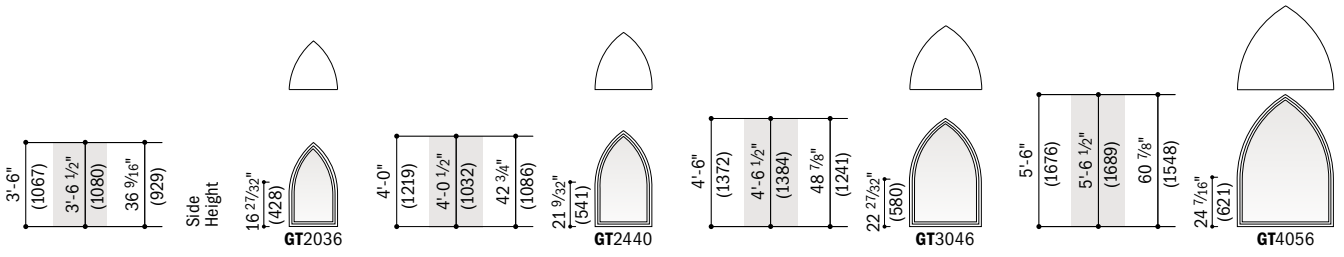

GT2036 **GT**2440 **GT**3046 **GT**4056

Table of Sizes for Octagon Windows

Scale 1/8" (3) = 1'-0" (305) – 1:96

Window Dimension	2'-0" (610)	2'-4" (711)	3'-0" (914)
Minimum Rough Opening	2'-0 1/2" (622)	2'-4 1/2" (724)	3'-0 1/2" (927)
Unobstructed Glass	19 5/16" (491)	23 5/16" (592)	31 5/16" (795)

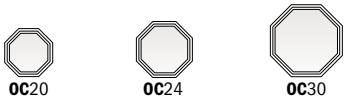

OC20 **OC**24 **OC**30

Table of Sizes for Monumental Quarter Circle and Monumental Circle Windows

Scale 1/8" (3) = 1'-0" (305) – 1:96

Window Dimension	4'-0" (1219)	4'-0" (1219)	6'-0" (1829)
Minimum Rough Opening	4'-0 1/2" (1232)	4'-0 1/2" (1232)	6'-0 1/2" (1842)
Unobstructed Glass	43 1/4" (1099)	43 5/16" (1100)	67 5/16" (1710)
Radius	48" (1219)	24" (610)	36" (914)

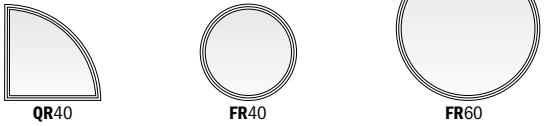

QR40 **FR**40 **FR**60

- Window Dimension always refers to outside frame-to-frame dimension.
- **Minimum Rough Opening dimensions may need to be increased to allow for use of building wraps, flashing, sill panning, brackets, fasteners or other items. See pages 222-223 for more details.**
- Dimensions in parentheses are in millimeters.

Table of Sizes for Eyebrow Windows

Scale 1/8" (3) = 1'-0" (305) – 1:96

Notes on the previous page also apply to this page.

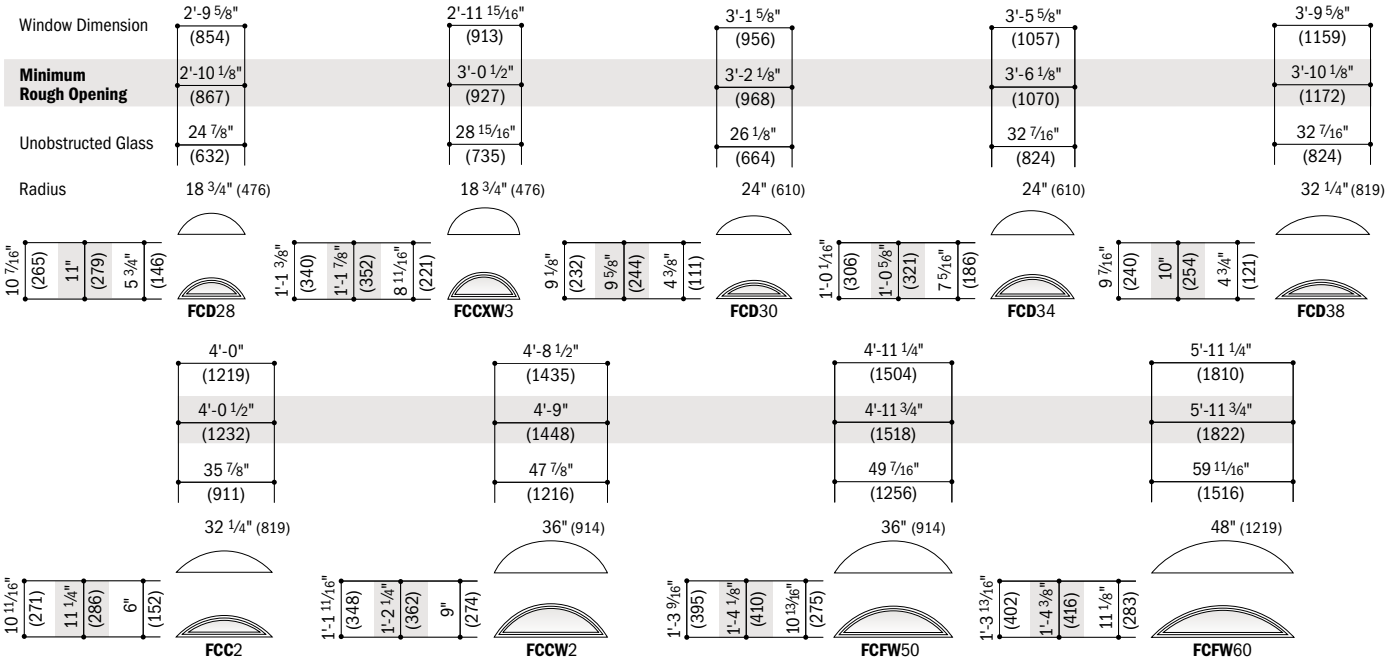

Area Specifications for Circle and Oval Windows

Window Number	Glass Area Sq. Ft./(m²)
CIR20	2.1 (0.20)
CIR24	3.0 (0.28)
CIR30	5.2 (0.48)
OVL1824	1.9 (0.18)
OVL2030	3.2 (0.30)
OVL3048	8.7 (0.81)

• Dimensions in parentheses are in square meters.

Area Specifications for Extended Gothic and Octagon Windows

Window Number	Glass Area Sq. Ft./(m²)
GT2036	4.01 (0.37)
GT2440	5.84 (0.54)
GT3046	8.78 (0.82)
GT4056	14.88 (1.38)
OC20	2.14 (0.20)
OC24	3.12 (0.29)
OC30	5.63 (0.52)

• Dimensions in parentheses are in square meters.

Area Specifications for Monumental Quarter Circle and Monumental Circle

Window Number	Glass Area Sq. Ft./(m²)
QR40	9.91 (0.92)
FR40	10.22 (0.95)
FR60	24.69 (2.29)

• Dimensions in parentheses are in square meters.

Area Specifications for Eyebrow Windows

Window Number	Glass Area Sq. Ft./(m²)
FCD28	0.69 (0.06)
FCD30	0.54 (0.05)
FCD34	1.15 (0.11)
FCD38	0.84 (0.08)
FCCXW3	1.24 (0.12)
FCC2	1.02 (0.09)
FCCW2	2.78 (0.26)
FCFW50	2.57 (0.24)
FCFW60	3.15 (0.29)

• Dimensions in parentheses are in square meters.

Grille Patterns

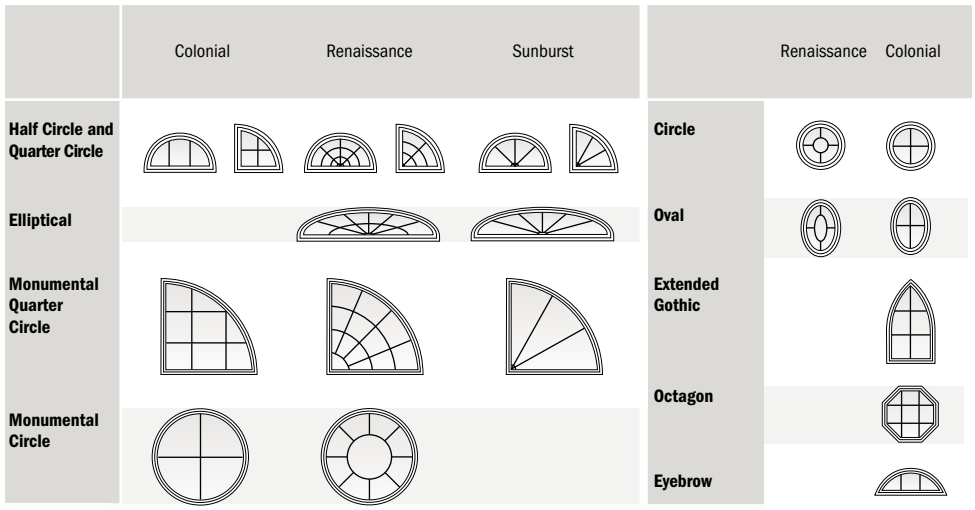

Patterns for specialty windows may not align with patterns for picture windows when horizontally joined. **Number of lights and overall pattern varies with window size. Patterns may not be available in all configurations or sizes.** Specified equal light and custom patterns are also available for most shapes. For more grille options, see page 18 or visit **andersenwindows.com/grilles**.

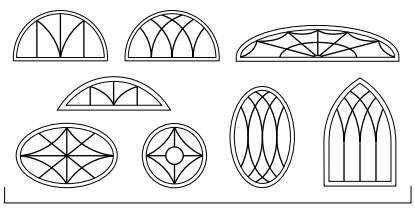

Custom Pattern Examples

Detail for Casement/Awning Half Circle Windows

Scale 1 1/2" (38) = 1'-0" (305) – 1:8

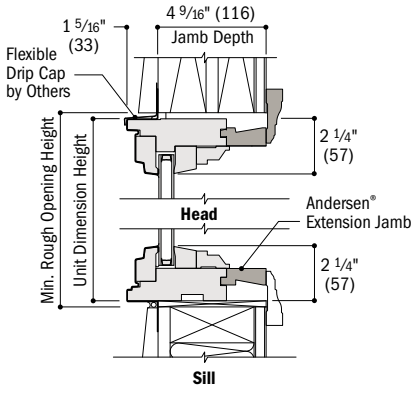

Vertical Section

Detail for Double-Hung Half Circle Windows

Scale 1 1/2" (38) = 1'-0" (305) – 1:8

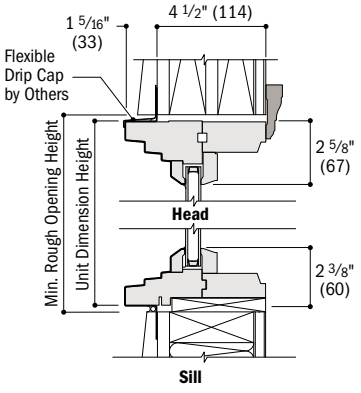

Vertical Section

Detail for Quarter Circle Windows

Scale 1 1/2" (38) = 1'-0" (305) – 1:8

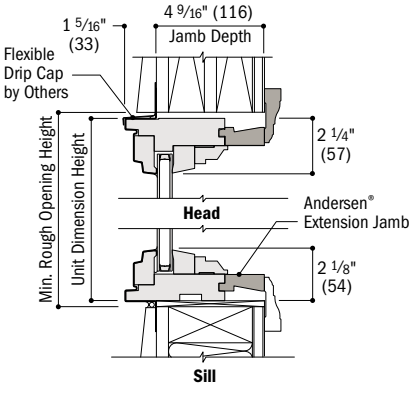

Vertical Section

Details for Extended Gothic Windows

Scale 1 1/2" (38) = 1'-0" (305) – 1:8

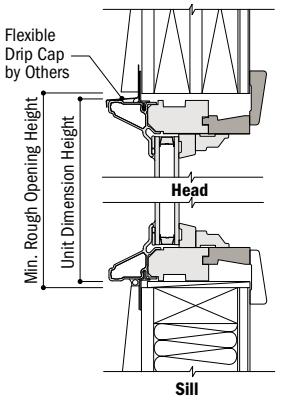

Vertical Section

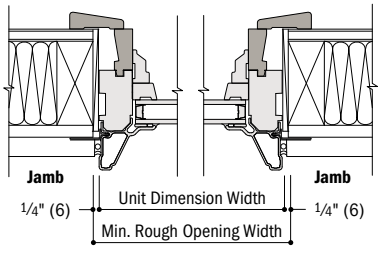

Horizontal Section

Details for Octagon Windows

Scale 1 1/2" (38) = 1'-0" (305) – 1:8

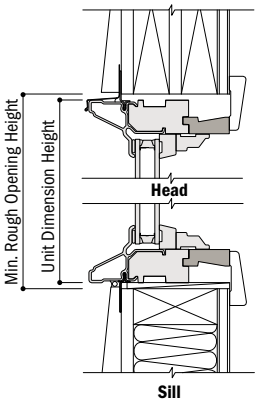

Vertical Section

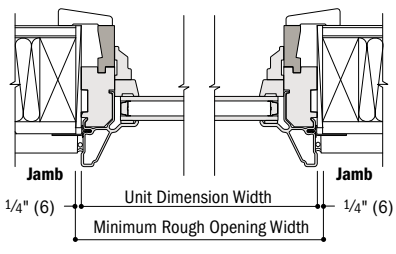

Horizontal Section

Details for Monumental Quarter Circle Windows

Scale 1 1/2" (38) = 1'-0" (305) – 1:8

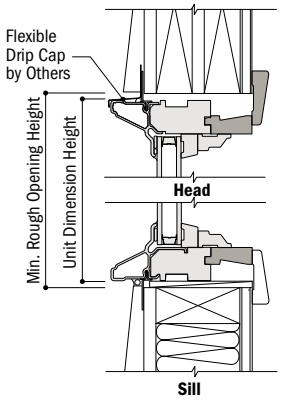

Vertical Section

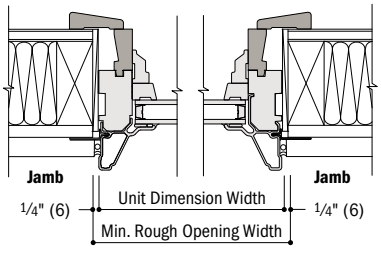

Horizontal Section

- 4 9/16" (116) overall jamb depth measurement is from back side of installation flange.
- Light-colored areas are parts included with window. Dark-colored areas are additional Andersen® parts required to complete window assembly as shown.
- **Minimum rough openings may need to be increased to allow for use of building wraps, flashing, sill panning, brackets, fasteners or other items. See installation information on pages 222-223.**
- Details are for illustration only and are not intended to represent product installation methods or materials. Refer to product installation guides at andersenwindows.com.
- Dimensions in parentheses are in millimeters.

Detail for Elliptical Windows
Scale 1 1/2" (38) = 1'-0" (305) – 1:8

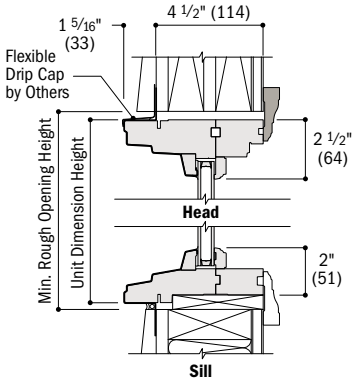

Vertical Section

Detail for Circle Windows
Scale 1 1/2" (38) = 1'-0" (305) – 1:8

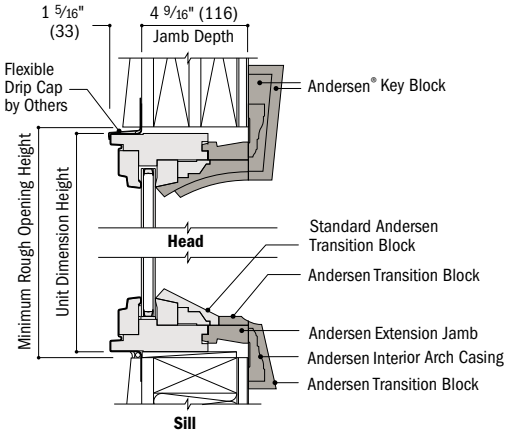

Vertical Section

Detail for Oval Windows
Scale 1 1/2" (38) = 1'-0" (305) – 1:8

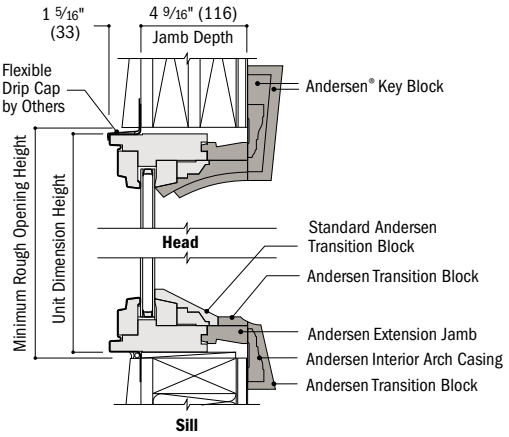

Vertical Section

Details for Monumental Circle Windows
Scale 1 1/2" (38) = 1'-0" (305) – 1:8

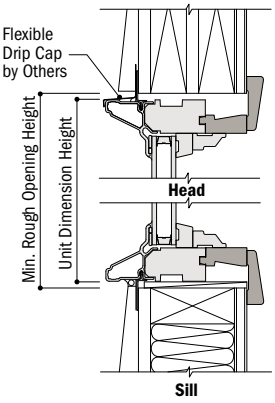

Vertical Section

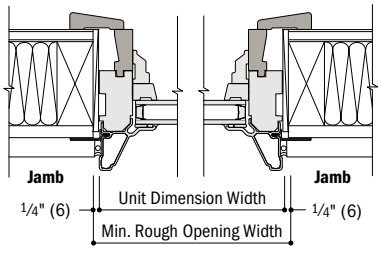

Horizontal Section

Details for Eyebrow Windows
Scale 1 1/2" (38) = 1'-0" (305) – 1:8

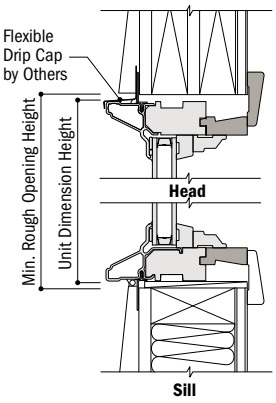

Vertical Section

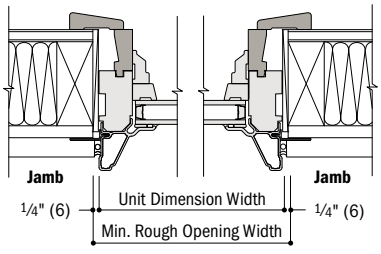

Horizontal Section

- 4 9/16" (116) overall jamb depth measurement is from back side of installation flange.
- Light-colored areas are parts included with window. Dark-colored areas are additional Andersen® parts required to complete window assembly as shown.
- **Minimum rough openings may need to be increased to allow for use of building wraps, flashing, sill panning, brackets, fasteners or other items. See installation information on pages 222-223.**
- Details are for illustration only and are not intended to represent product installation methods or materials. Refer to product installation guides at andersenwindows.com.
- Dimensions in parentheses are in millimeters.

Horizontal (stack) Joining Details

Scale 1 1/2" (38) = 1'-0" (305) – 1:8

Casement/Awning Half Circle Over Casement Window

Overall Window Dimension Height

Sum of individual window heights plus 1/8" (3) per join.

Overall Rough Opening Height

Overall window dimension height plus 5/8" (16).

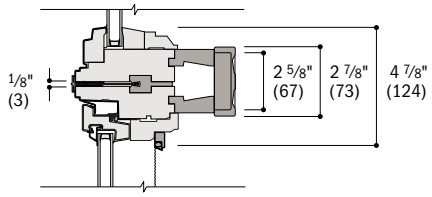

Vertical Section

Double-Hung Half Circle Over Tilt-Wash Double-Hung Window

Overall Window Dimension Height

Sum of individual window heights plus 0" per join.

Overall Rough Opening Height

Overall window dimension height plus 3/8" (10).

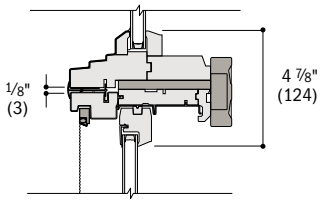

Vertical Section

Elliptical Window Over Frenchwood® Gliding Patio Door

Overall Unit Dimension Height

Sum of individual unit heights plus 3/8" (10).

Overall Rough Opening Height

Overall unit dimension height plus 5/8" (16).

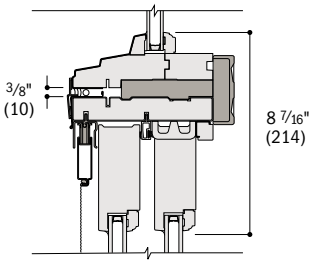

Vertical Section

Elliptical Window Over Frenchwood® Hinged Inswing Patio Door

Overall Unit Dimension Height

Sum of individual unit heights plus 1/8" (3).

Overall Rough Opening Height

Overall unit dimension height plus 1" (25).

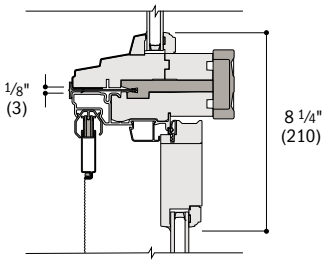

Vertical Section

Elliptical Window Over Perma-Shield® Gliding Patio Door

Overall Unit Dimension Height

Sum of individual unit heights plus 3/8" (10).

Overall Rough Opening Height

Overall unit dimension height plus 5/8" (16).

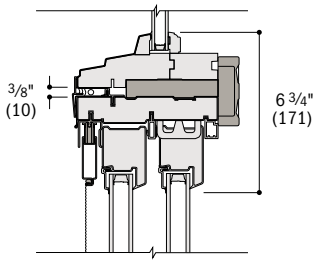

Vertical Section

For more information on joining, refer to the Combination Designs section starting on page 183.

- Light-colored areas are parts included with window. Dark-colored areas are additional Andersen® parts required to complete window assembly as shown.
- **Minimum rough openings may need to be increased to allow for use of building wraps, flashing, sill panning, brackets, fasteners or other items. See installation information on pages 222-223.**
- Details are for illustration only and are not intended to represent product installation methods or materials. Refer to product installation guides at andersenwindows.com.
- Structural performance of any combination is only as high as the lowest structural performance of any individual product or join in the combination.
- Consult with an architect or structural engineer regarding minimum requirements for structural support members between adjacent rough openings.
- Dimensions in parentheses are in millimeters.

Custom Arch Windows

Andersen offers even greater design flexibility with custom-dimensioned arch, unequal leg arch and partial eyebrow windows. Custom arch windows can be designed using one of 10 standard radii, further expanding the existing line of 90 standard sizes of Andersen® arch windows. Custom arch shapes and sizes are specially constructed to be used in combination with other Andersen windows, including casement, awning, double-hung, gliding and Flexiframe® windows, and gliding or hinged patio doors.

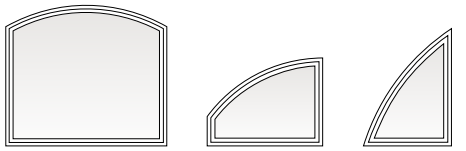

Arch | Unequal Leg Arch | Partial Eyebrow



16' (4877) Radius for Joined Combinations

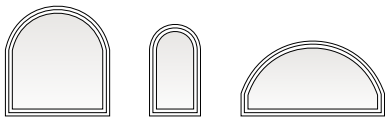

Springline™ Window Expressions

Andersen grilles are available for most styles and sizes. Contact your supplier for availability.

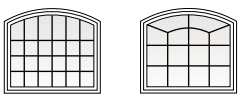

Renaissance | Colonial

Design Criteria

Listed below are some factors that must be considered when deciding on a custom arch size and shape. For specific design criteria, joining instructions and order information, contact your Andersen supplier.

- **All units are fixed**
- **Do all calculations in inches to 3 decimal places**
- **Maximum standard glass area of 60 sq. ft. or 5.57 m²**
- **Ten standard radii:**
  18 3/4" (476), 2' (610), 32 1/4" (819), 34 1/4" (870), 3' (914), 4' (1219), 5' (1524), 6' (1829), 8' (2438), 16' (4877)
- **Maximum radii:** based on available radius piece length; contact supplier for specific information
- **Maximum equal leg arch unit width:**
  36 3/4" (399) for 18 3/4" (476) radius to 12' (3658) for 16' (4877) radius
- **Maximum unequal leg arch unit width:**
  18 3/4" (476) for 18 3/4" radius to 11'-2" (3404) for 16' (4877) radius
- **Maximum partial eyebrow unit width:**
  18 3/4" (476) for 18 3/4" radius to 11'-5 1/2" (3493) for 16' (4877) radius
- **Only one dimension (height or width) can exceed 7'-0" (2134)**
- **No height dimension greater than 12'-0" (3658)**
- **No leg dimension less than 6" (152)**
- **Order extension jambs along with window for correct sizing**

Standard Radii and Maximum Unit Width

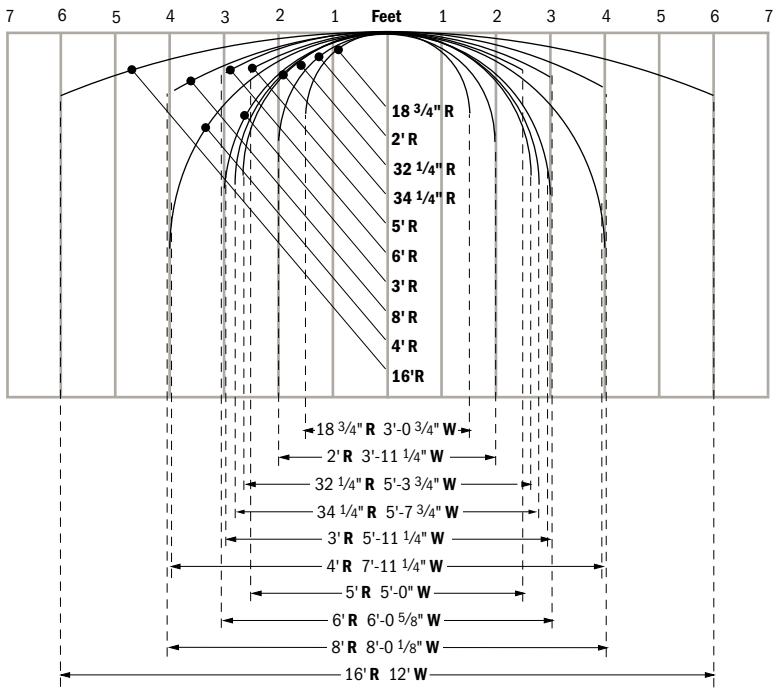

• Dimensions in parentheses are in millimeters.

Table of Sizes for Arch Windows

Scale 1/8" (3) = 1'-0" (305) – 1:96

Notes on the next page also apply to this page.

Window Width Dimension	2'-0 1/8" (613)	2'-4 3/8" (721)	2'-11 15/16" (913)	4'-0" (1219)	4'-8 1/2" (1435)	4'-11 1/4" (1505)	5'-11 1/4" (1810)
Minimum Rough Opening	2'-0 5/8" (625)	2'-4 7/8" (733)	3'-0 1/2" (927)	4'-0 1/2" (1232)	4'-9" (1448)	4'-11 3/4" (1518)	5'-11 3/4" (1822)
Unobstructed Glass	19 3/8" (492)	23 5/8" (600)	31 3/16" (792)	43 1/4" (1099)	51 3/4" (1314)	54 1/2" (1384)	66 1/2" (1689)

Window Height Shown in Table	Radius	2' (610)	2' (610)	3' (914)	4' (1219)	5' (1524)	5' (1524)	6' (1829)
	Chord Height	3 1/4" (83)	4 21/32" (118)	4 13/16" (122)	6 7/16" (164)	7 1/16" (179)	7 13/16" (198)	9 7/16" (240)
	Side Height	9 1/4" (235)	10 21/32" (271)	10 13/16" (275)	1'-0 7/16" (316)	1'-1 1/16" (332)	1'-1 13/16" (351)	1'-3 7/16" (392)
		AFC106	**AFCW**106	**AFCP**3006	**AFC**206	**AFCW**206	**AFFW**5006	**AFFW**6006
		12" (305)	1'-4 21/32" (423)	1'-4 13/16" (427)	1'-6 7/16" (468)	1'-7 1/16" (484)	1'-7 13/16" (503)	1'-9 7/16" (545)
		AFC11	**AFCW**11	**AFCP**301	**AFC**21	**AFCW**21	**AFFW**501	**AFFW**601
	2'-0 1/8" (613)	2'-3 3/8" (695)	2'-4 25/32" (731)	2'-4 15/16" (735)	2'-6 9/16" (776)	2'-7 3/16" (792)	2'-7 15/16" (811)	2'-9 9/16" (852)
		AFC12	**AFCW**12	**AFCP**302	**AFC**22	**AFCW**22	**AFFW**502	**AFFW**602
	2'-11 15/16" (913)	3'-3 3/16" (995)	3'-4 19/32" (1031)	3'-4 3/4" (1035)	3'-6 3/8" (1076)	3'-7" (1092)	3'-7 3/4" (1111)	3'-9 3/8" (1153)
		AFC13	**AFCW**13	**AFCP**303	**AFC**23	**AFCW**23	**AFFW**503	**AFFW**603
	3'-4 13/16" (1037)	3'-8 1/16" (1119)	3'-9 15/32" (1155)	3'-9 5/8" (1159)	3'-11 1/4" (1200)	3'-11 7/8" (1216)	4'-0 5/8" (1235)	4'-2 1/4" (1276)
		AFC135	**AFCW**135	**AFCP**3035	**AFC**235	**AFCW**235	**AFFW**5035	**AFFW**6035
	4'-0" (1219)	4'-3 1/4" (1302)	4'-4 21/32" (1337)	4'-4 13/16" (1341)	4'-6 7/16" (1383)	4'-7 1/16" (1399)	4'-7 13/16" (1418)	4'-9 7/16" (1459)
		AFC14	**AFCW**14	**AFCP**304	**AFC**24	**AFCW**24	**AFFW**504	**AFFW**604
	4'-4 13/16" (1341)	4'-8 1/16" (1424)	4'-9 15/32" (1460)	4'-9 5/8" (1464)	4'-11 1/4" (1505)	4'-11 7/8" (1521)	5'-0 5/8" (1540)	5'-2 1/4" (1581)
		AFC145	**AFCW**145	**AFCP**3045	**AFC**245	**AFCW**245	**AFFW**5045	**AFFW**6045
	4'-11 7/8" (1521)	5'-3 1/8" (1603)	5'-4 17/32" (1639)	5'-4 11/16" (1643)	5'-6 5/16" (1684)	5'-6 15/16" (1700)	5'-7 11/16" (1719)	5'-9 5/16" (1761)
		AFC15	**AFCW**15	**AFCP**305	**AFC**25	**AFCW**25	**AFFW**505	**AFFW**605
	5'-4 13/16" (1646)	5'-8 1/16" (1729)	5'-9 15/32" (1765)	5'-9 5/8" (1768)	5'-11 1/4" (1810)	5'-11 7/8" (1826)	6'-0 5/8" (1845)	6'-2 1/4" (1886)
		AFC155	**AFCW**155	**AFCP**3055	**AFC**255	**AFCW**255	**AFFW**5055	**AFFW**6055
	5'-11 7/8" (1826)	6'-3 1/8" (1908)	6'-4 17/32" (1944)	6'-4 11/16" (1948)	6'-6 5/16" (1989)	6'-6 15/16" (2005)	6'-7 11/16" (2024)	6'-9 5/16" (2065)
		AFC16	**AFCW**16	**AFCP**306	**AFC**26	**AFCW**26	**AFFW**506	**AFFW**606
	8'-0 1/8" (2442)	8'-3 3/8" (2524)	8'-4 25/32" (2560)	8'-4 15/16" (2564)	8'-6 9/16" (2605)	8'-7 3/16" (2621)	8'-7 15/16" (2640)	8'-9 9/16" (2681)
		AFC18	**AFCW**18	**AFCP**308	**AFC**28	**AFCW**28	**AFFW**508	**AFFW**608*

Minimum Rough Opening = window height + 1/2" (13)

Unobstructed Glass = window height – 4 3/4" (121)

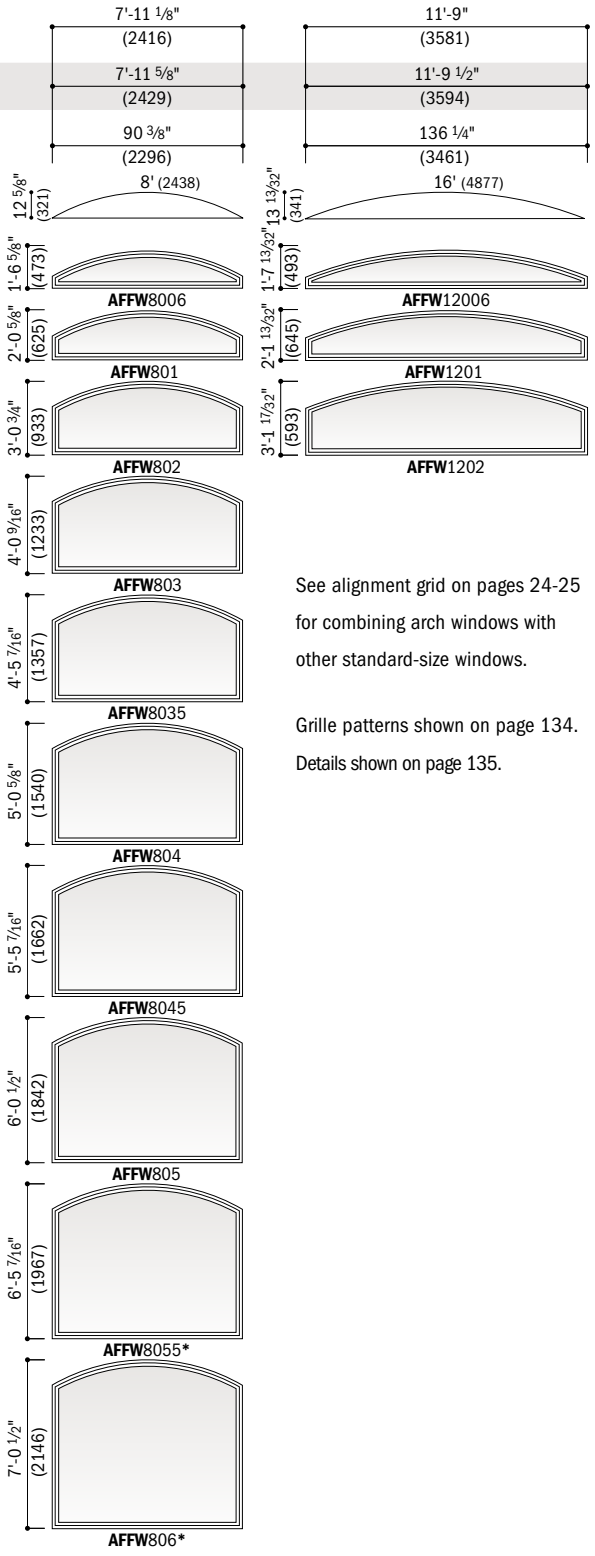

See alignment grid on pages 24-25 for combining arch windows with other standard-size windows.

Grille patterns shown on page 134.

Details shown on page 135.

• Window Dimension always refers to outside frame-to-frame dimension.
• **Minimum Rough Opening dimensions may need to be increased to allow for use of building wraps, flashing, sill panning, brackets, fasteners or other items. See pages 222-223 for more details.**
• Dimensions in parentheses are in millimeters.
*Tempered glass standard.

Area Specifications for Arch Windows

Window Number	Glass Area Sq. Ft./(m^2)	
AFC106	0.7	(0.07)
AFC11	1.6	(0.15)
AFC12	3.4	(0.32)
AFC13	5.1	(0.47)
AFC135	5.8	(0.54)
AFC14	6.8	(0.63)
AFC145	7.5	(0.70)
AFC15	8.5	(0.79)
AFC155	9.2	(0.86)
AFC16	10.3	(0.96)
AFC18	13.8	(1.28)
AFCW106	1.1	(0.10)
AFCW11	2.1	(0.20)
AFCW12	4.2	(0.39)
AFCW13	6.3	(0.59)
AFCW135	7.1	(0.66)
AFCW14	8.4	(0.78)
AFCW145	9.2	(0.86)
AFCW15	10.4	(0.97)
AFCW155	11.3	(1.05)
AFCW16	12.5	(1.16)
AFCW18	16.8	(1.56)
AFCP3006	1.4	(0.13)
AFCP301	2.8	(0.26)
AFCP302	5.5	(0.51)
AFCP303	8.2	(0.76)
AFCP3035	9.3	(0.86)
AFCP304	10.9	(1.01)
AFCP3045	12.0	(1.12)
AFCP305	13.6	(1.26)
AFCP3055	14.7	(1.37)
AFCP306	16.3	(1.51)
AFCP308	21.8	(2.03)
AFC206	2.2	(0.20)
AFC21	4.1	(0.38)
AFC22	7.8	(0.73)
AFC23	11.5	(1.07)
AFC235	13.0	(1.21)
AFC24	15.2	(1.41)
AFC245	16.7	(1.55)
AFC25	18.9	(1.76)
AFC255	20.4	(1.90)
AFC26	22.6	(2.10)
AFC28	30.2	(2.81)
AFCW206	2.8	(0.26)
AFCW21	5.1	(0.47)
AFCW22	9.5	(0.88)
AFCW23	13.9	(1.29)
AFCW235	15.7	(1.46)
AFCW24	18.3	(1.70)
AFCW245	20.1	(1.87)
AFCW25	22.7	(2.11)
AFCW255	24.6	(2.29)
AFCW26	27.2	(2.53)
AFCW28	36.1	(3.35)
AFFW5006	3.2	(0.30)
AFFW501	5.5	(0.51)
AFFW502	10.3	(0.96)
AFFW503	14.8	(1.38)
AFFW5035	16.7	(1.55)

Window Number	Glass Area Sq. Ft./(m^2)	
AFFW504	19.5	(1.81)
AFFW5045	21.4	(1.99)
AFFW505	24.1	(2.24)
AFFW5055	26.1	(2.43)
AFFW506	28.8	(2.68)
AFFW508	38.2	(3.55)
AFFW6006	4.4	(0.41)
AFFW601	7.2	(0.67)
AFFW602	12.9	(1.20)
AFFW603	18.5	(1.72)
AFFW6035	20.8	(1.93)
AFFW604	24.2	(2.25)
AFFW6045	26.5	(2.46)
AFFW605	29.8	(2.77)
AFFW6055	32.1	(2.98)
AFFW606	35.5	(3.30)
AFFW608	46.9	(4.36)
AFFW8006	7.3	(0.68)
AFFW801	11.1	(1.03)
AFFW802	18.8	(1.75)
AFFW803	26.4	(2.45)
AFFW8035	29.5	(2.74)
AFFW804	34.1	(3.17)
AFFW8045	37.1	(3.45)
AFFW805	41.6	(3.87)
AFFW8055	44.8	(4.16)
AFFW806	49.3	(4.58)
AFFW12006	9.9	(0.92)
AFFW1201	15.6	(1.45)
AFFW1202	27.1	(2.52)

• Dimensions in parentheses are in square meters.

Table of Sizes for Springline™ Windows

Scale ⅛" (3) = 1'-0" (305) – 1:96

Notes on the next page also apply to this page.

Window Width Dimension	3'-1 ½" (953)	4'-0" (1219)	5'-4 ½" (1638)	5'-8 ½" (1740)	5'-11 ¼" (1810)	6'-0" (1829)
Minimum Rough Opening	3'-2" (965)	4'-0 ½" (1232)	5'-5" (1651)	5'-9" (1753)	5'-11 ¾" (1822)	6'-0 ½" (1842)
Unobstructed Glass	32 ¾" (832)	43 ¼" (1099)	59 ¾" (1518)	63 ¾" (1619)	66 ½" (1689)	67 ¼" (1708)
Radius	18 ¾" (476)	24" (610)	32 ¼" (819)	34 ¼" (870)	36" (914)	36" (914)

Window Height Shown in Table — Chord Height: 18 ¾" (476); 24" (610); 32 ¼" (819); 34 ¼" (870); 30 ¹³⁄₁₆" (783); 36" (914)

Minimum Rough Opening = window height + ½" (13)

Unobstructed Glass = window height – 4 ¾" (121)

Side Height

Side Height	3'-1 ½" (953)	4'-0" (1219)	5'-4 ½" (1638)	5'-8 ½" (1740)	5'-11 ¼" (1810)	6'-0" (1829)
6" (152)	2'-0 ¾" (629) **SE**3106		3'-2 ¼" (972) **SE**5406	3'-4 ¼" (1022) **SE**5806	3'-0 ¹³⁄₁₆" (935) **ELFW**6006	3'-6" (1067) **SE**6006
12" (305)	2'-6 ¾" (781) **SE**311		3'-8 ¼" (1124) **SE**541	3'-10 ¼" (1175) **SE**581	3'-6 ¹³⁄₁₆" (1087) **ELFW**601	4'-0" (1219) **SE**601
2'-0 ⅛" (613)	3'-6 ⅞" (1089) **SE**312	4'-0 ⅛" (1222) **SP**402	4'-8 ⅜" (1432) **SE**542	4'-10 ⅜" (1483) **SE**582	4'-6 ¹⁵⁄₁₆" (1395) **ELFW**602	5'-0 ⅛" (1527) **SE**602
2'-11 ¹⁵⁄₁₆" (913)	4'-6 ¹¹⁄₁₆" (1389) **SE**313	4'-11 ¹⁵⁄₁₆" (1522) **SP**403	5'-8 ³⁄₁₆" (1732) **SE**543	5'-10 ³⁄₁₆" (1783) **SE**583		5'-11 ¹⁵⁄₁₆" (1827) **SE**603
3'-4 ¹³⁄₁₆" (1037)	4'-11 ⁹⁄₁₆" (1513) **SE**3135	5'-4 ¹³⁄₁₆" (1646) **SP**4035	6'-1 ¹⁄₁₆" (1856) **SE**5435	6'-3 ¹⁄₁₆" (1907) **SE**5835		6'-4 ¹³⁄₁₆" (1951) **SE**6035
4'-0" (1219)	5'-6 ¾" (1695) **SE**314	6'-0" (1829) **SP**404	6'-8 ¼" (2038) **SE**544	6'-10 ¼" (2089) **SE**584		7'-0" (2134) **SE**604
4'-4 ¹³⁄₁₆" (1341)	5'-11 ⁹⁄₁₆" (1818) **SE**3145	6'-4 ¹³⁄₁₆" (1951) **SP**4045	7'-1 ¹⁄₁₆" (2161) **SE**5445	7'-3 ¹⁄₁₆" (2211) **SE**5845		7'-4 ¹³⁄₁₆" (2256) **SE**6045
4'-11 ⅞" (1521)	6'-6 ⅝" (1997) **SE**315	6'-11 ⅞" (2130) **SP**405	7'-8 ⅛" (2340) **SE**545	7'-10 ⅛" (2391) **SE**585		7'-11 ⅞" (2435) **SE**605*

Additional heights on page 134.

continued on next two pages

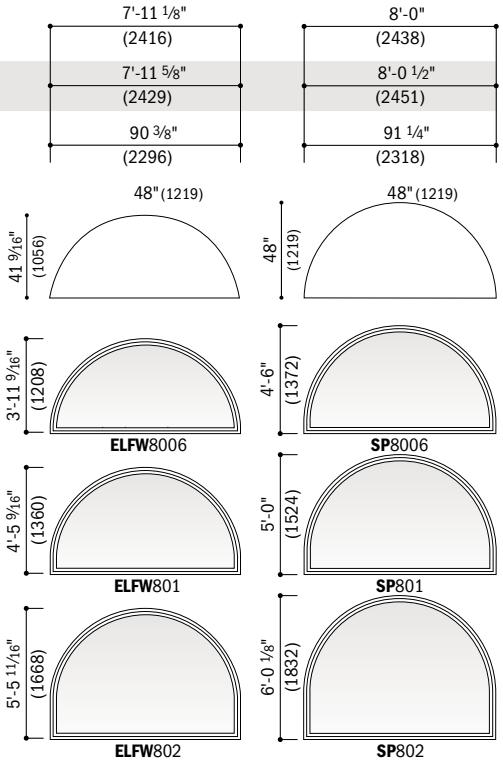

continued on next page

Extension jambs are available factory applied when ordered at the same time as Springline™ windows.

Grille patterns shown on page 134.

Details shown on page 135.

Area Specifications for Springline™ Windows

Window Number	Glass Area Sq. Ft./(m²)	
SE3106	3.74	(0.35)
SE311	5.10	(0.47)
SE312	7.86	(0.73)
SE313	10.54	(0.98)
SE3135	11.65	(1.08)
SE314	13.28	(1.23)
SE3145	14.38	(1.34)
SE315	15.98	(1.49)
SE3155	17.10	(1.59)
SE316	18.71	(1.74)
SE5406	11.22	(1.04)
SE541	13.71	(1.27)
SE542	18.74	(1.74)
SE543	23.64	(2.20)
SE5435	25.66	(2.38)
SE544	28.64	(2.66)
SE5445	30.64	(2.85)
SE545	33.57	(3.12)
SE5455	35.61	(3.31)
SE546	38.54	(3.58)
SE5806	12.67	(1.18)
SE581	15.33	(1.42)
SE582	20.69	(1.92)
SE583	25.92	(2.41)
SE5835	28.08	(2.61)
SE584	31.26	(2.90)
SE5845	33.39	(3.10)
SE585	36.51	(3.39)
SE5855	38.70	(3.60)
SE586	41.82	(3.89)
SE6006	14.01	(1.30)
SE601	16.81	(1.56)
SE602	22.47	(2.09)
SE603	27.98	(2.60)
SE6035	30.26	(2.81)
SE604	33.61	(3.12)
SE6045	35.86	(3.33)
SE605	39.16	(3.64)
SE6055	41.46	(3.85)
SE606	44.76	(4.16)
SP402	11.62	(1.08)
SP403	15.16	(1.41)
SP4035	16.63	(1.55)
SP404	18.78	(1.75)
SP4045	20.23	(1.88)
SP405	22.35	(2.08)
SP4055	23.83	(2.21)
SP406	25.95	(2.41)
SP8006	24.98	(2.32)
SP801	24.98	(2.32)
SP802	36.46	(3.39)
ELFW6006	11.58	(1.08)
ELFW601	14.35	(1.33)
ELFW602	19.95	(1.85)
ELFW8006	20.88	(1.94)
ELFW801	24.64	(2.29)
ELFW802	32.25	(3.00)

• Dimensions in parentheses are in square meters.

• Window Dimension always refers to outside frame-to-frame dimension.
• **Minimum Rough Opening dimensions may need to be increased to allow for use of building wraps, flashing, sill panning, brackets, fasteners or other items. See pages 222-223 for more details.**
• Dimensions in parentheses are in millimeters.
*Tempered glass standard.

Table of Sizes for Springline™ Windows *(continued)*

Scale 1/8" (3) = 1'-0" (305) – 1:96

Window Width Dimension	3'-1 1/2" (953)	4'-0" (1219)	5'-4 1/2" (1638)	5'-8 1/2" (1740)		6'-0" (1829)
Minimum Rough Opening	3'-2" (965)	4'-0 1/2" (1232)	5'-5" (1651)	5'-9" (1753)		6'-0 1/2" (1842)
Unobstructed Glass	32 3/4" (832)	43 1/4" (1099)	59 3/4" (1518)	63 3/4" (1619)		67 1/4" (1708)
Radius	18 3/4" (476)	24" (610)	32 1/4" (819)	34 1/4" (870)		36" (914)
Window Height Shown in Table / Chord Height	18 3/4" (476)	24" (610)	32 1/4" (819)	34 1/4" (870)		36" (914)

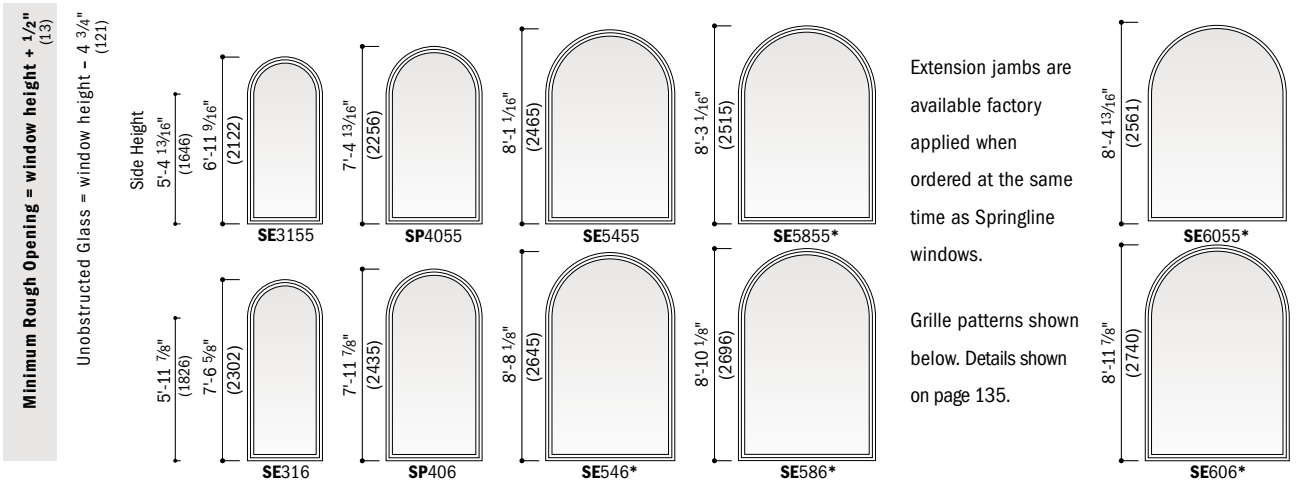

Table is continued from page 132.

Extension jambs are available factory applied when ordered at the same time as Springline windows.

Grille patterns shown below. Details shown on page 135.

- Window Dimension always refers to outside frame-to-frame dimension.
- **Minimum Rough Opening dimensions may need to be increased to allow for use of building wraps, flashing, sill panning, brackets, fasteners or other items. See pages 222-223 for more details.**
- Dimensions in parentheses are in millimeters.

*Tempered glass standard.

Grille Patterns

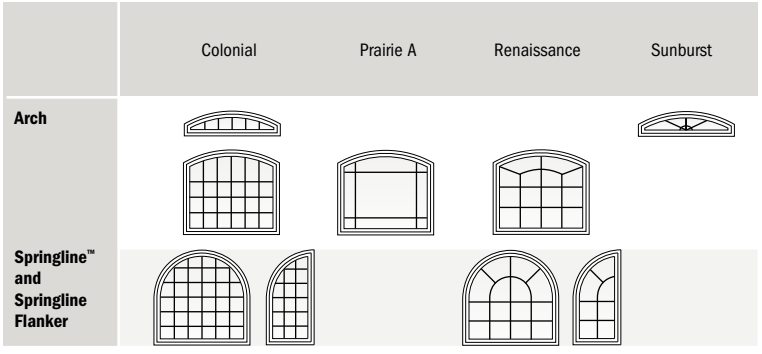

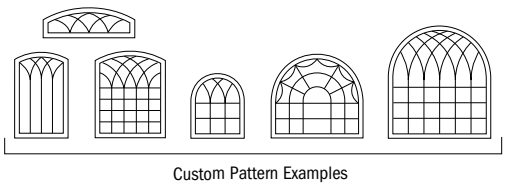

Custom Pattern Examples

Number of lights and overall pattern varies with window size. Patterns may not be available in all configurations or sizes. Specified equal light and custom patterns are also available. For more grille options, see page 18 or visit **andersenwindows.com/grilles**.

Table of Sizes for Springline™ Flanker Windows

Scale 1/8" (3) = 1'-0" (305) – 1:96

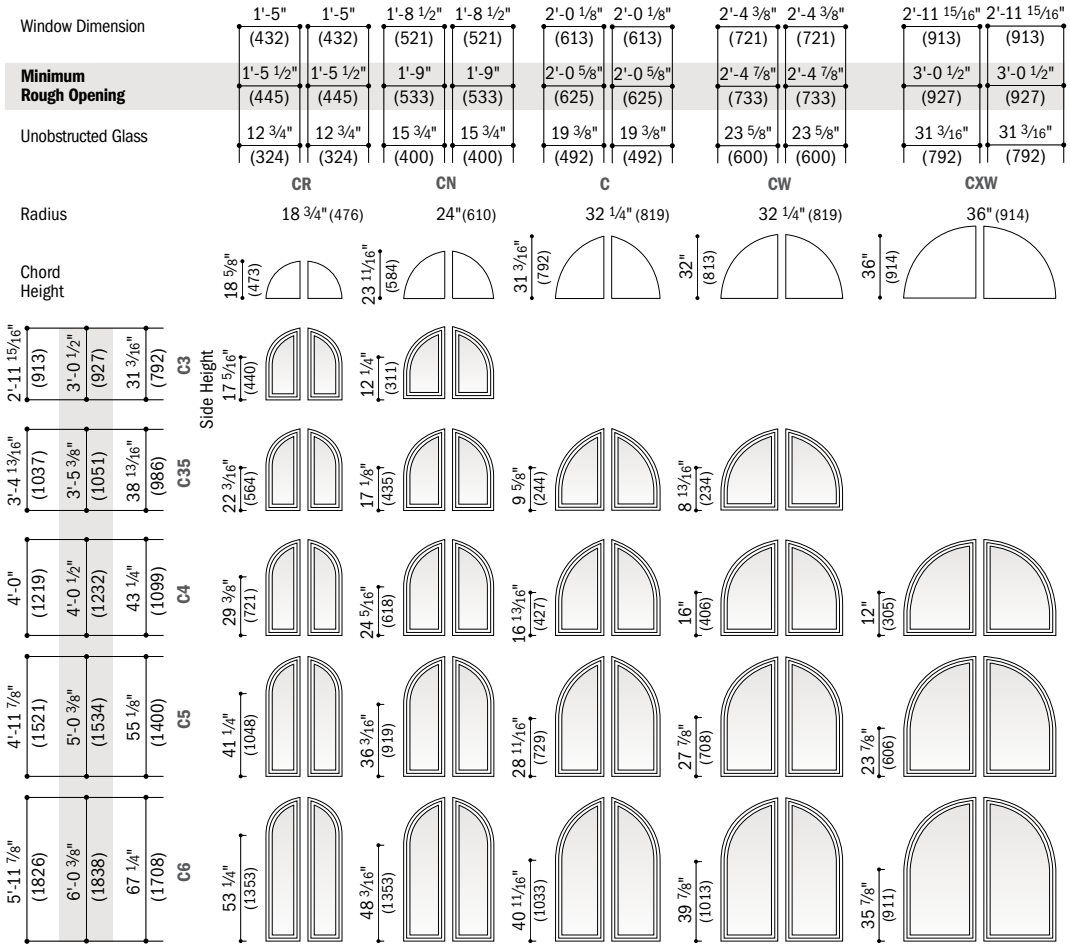

Window dimensions shown in table are compatible with standard casement window widths (**CR**, **CN**, **C**, **CW**, **CXW**) and heights (**C3**, **C35**, **C4**, **C5**, **C6**).

Grille patterns shown on page 134. Details shown below.

- Window Dimension always refers to outside frame-to-frame dimension.
- **Minimum Rough Opening dimensions may need to be increased to allow for use of building wraps, flashing, sill panning, brackets, fasteners or other items. See pages 222-223 for more details.**
- Dimensions in parentheses are in millimeters.

Details for Arch Windows

Scale 1 1/2" (38) = 1'-0" (305) – 1:8

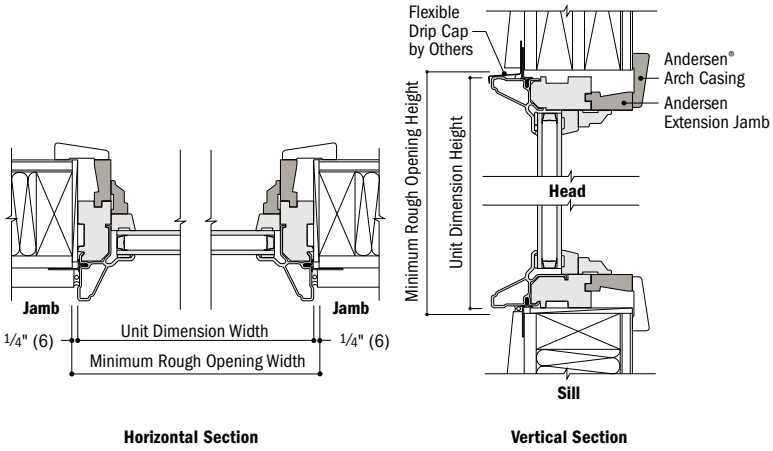

Details for Springline™ Windows

Scale 1 1/2" (38) = 1'-0" (305) – 1:8

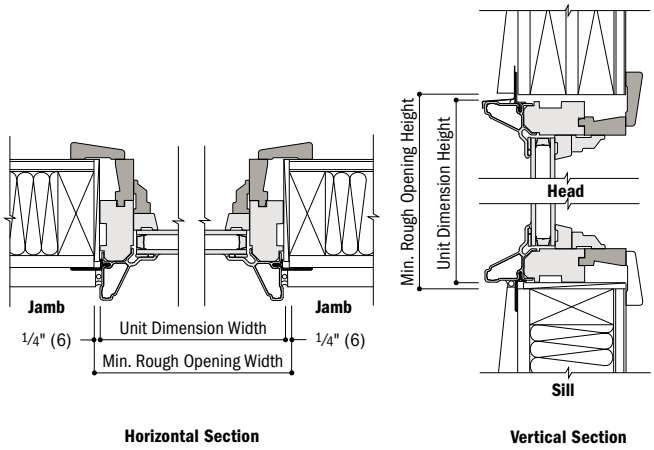

- Light-colored areas are parts included with window. Dark-colored areas are additional Andersen® parts required to complete window assembly as shown.
- **Minimum rough openings may need to be increased to allow for use of building wraps, flashing, sill panning, brackets, fasteners or other items. See installation information on pages 222-223.**
- Details are for illustration only and are not intended to represent product installation methods or materials. Refer to product installation guides at andersenwindows.com.
- Dimensions in parentheses are in millimeters.

Flexiframe® Window Shapes and Design Criteria

Minimum and Maximum Limits

Flexiframe windows are available in many shapes and sizes with these limitations:

Grilles are available with a traditional or contemporary grille bar profile in a variety of types and patterns. Contact your Andersen supplier for more information.

- **Maximum standard glass area of 60 sq. ft. or 5.57 m²**
- **Square footage is based on a square or rectangular shape**
- **No angle may be less than 14°**
- **No leg may be less than 6" (152) or greater than 144" (3658)**
- **No short side may be greater than 84" (2134)**
- **See product information below for additional limitations based on specific shapes**

Triangle

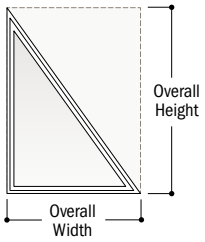

Right triangles contain one 90° corner. Specify overall width and overall height extending from the 90° corner.

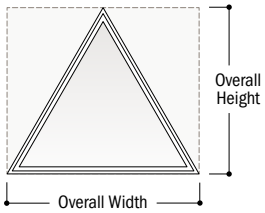

Isosceles triangles contain two sides of equal length and equal angle. Specify overall width and overall height (sill to peak).

Octagon

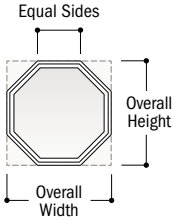

Octagons contain eight equal angles and sides. Specify length of equal side. Standard-size octagons are available in 2' (610), 2'-4" (711) and 3' (914) dimensions. See page 124.

Parallelogram

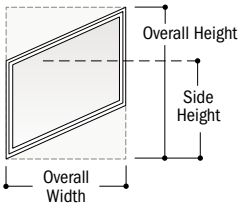

Parallelograms contain two pairs of parallel sides. Specify overall width along with side height and overall window height.

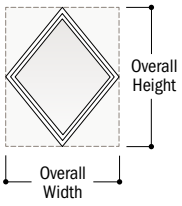

Diamonds contain two pairs of parallel and equal length sides. Specify overall width and overall height.

Hexagon

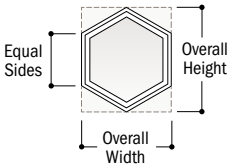

Hexagons contain six equal angles and sides. Specify length of equal sides.

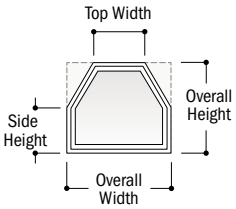

Unequal hexagons contain three pairs of angles and two sets of equal-length sides. Top side is parallel to and centered over the sill. Specify overall width, top width, side height and overall height.

Rectangle

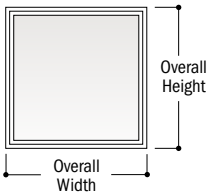

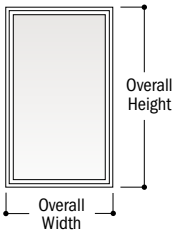

Rectangles contain four equal angles and two equal sides for rectangles, or four equal sides for squares. Specify overall width and overall height.

Trapezoid

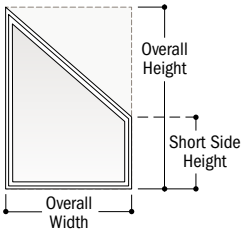

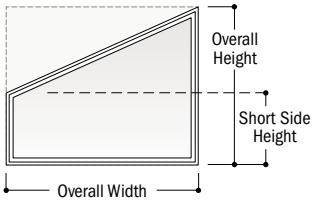

Trapezoids contain an angle face cut to left or right. Specify overall width along with short side height and overall height. Window's pitch is often designed to match a roof's pitch.

Pentagon

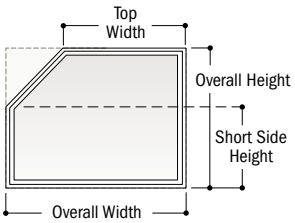

Angled pentagons contain an angle cut, or a "cut-off corner" sloping to left or right. Specify overall width and top width along with short side height and overall height.

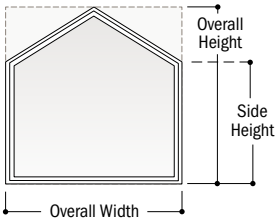

Peak pentagons contain sides of equal length extending at right angles from the sill and two angled sides of equal length that peak above center of sill. Specify overall width, side height and overall height.

• Dimensions in parentheses are in millimeters.

Detail for Flexiframe® Windows – Traditional Trim Stops
Scale 1 1/2" (38) = 1'-0" (305) – 1:8

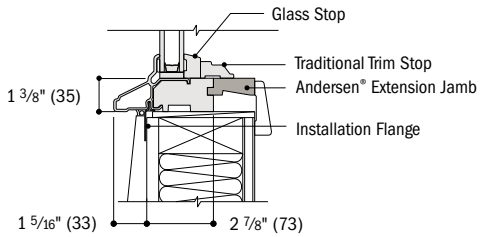

Vertical Section

Detail for Flexiframe® Windows – Contemporary Trim Stops
Scale 1 1/2" (38) = 1'-0" (305) – 1:8

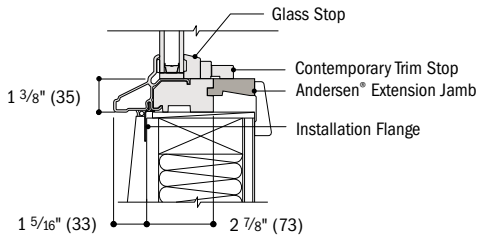

Vertical Section

Combination Designs

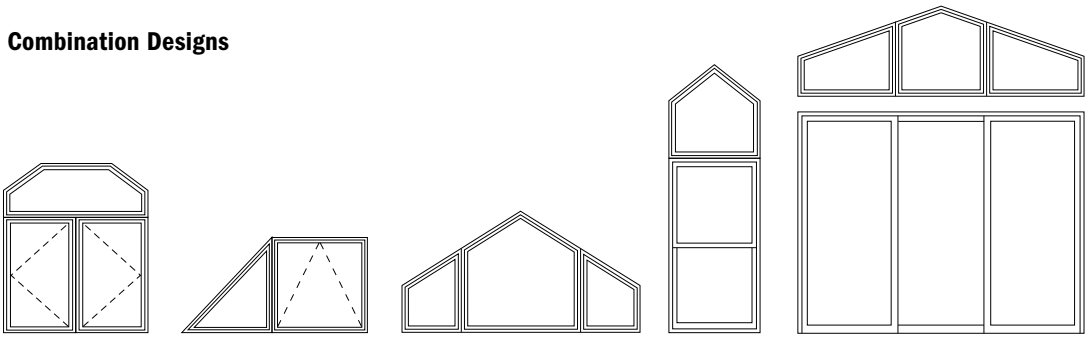

Extension Jamb Alignment

For these joined 400 Series window combinations only:

- Arch, Springline™ or Flexiframe® over Casement
- Arch, Springline or Flexiframe alongside Awning

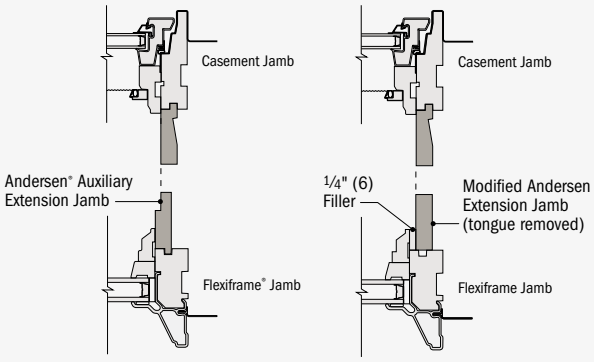

Method A: Individually Framed – Use optional Andersen auxiliary extension jambs for individual picture frame trimming.

Method B: Perimeter Framed – For continuous perimeter trimming, remove extension jamb tongue and use 1/4" (6)-thick filler between Arch, Springline or Flexiframe trim stop and extension jamb.

Vertical (ribbon) Joining Detail
Scale 1 1/2" (38) = 1'-0" (305) – 1:8

Overall Window Dimension Width

Sum of individual window widths plus 3/16" (5) per join.

Overall Rough Opening Width

Overall window dimension width plus 1/2" (13).

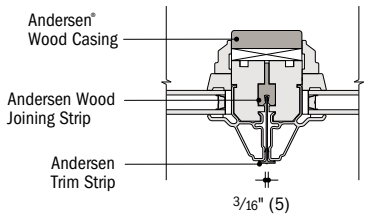

Horizontal Section
Flexiframe® to Flexiframe

Horizontal joining on next page. For more information on joining, refer to the Combination Designs section starting on page 183.

- Light-colored areas are parts included with window. Dark-colored areas are additional Andersen® parts required to complete window assembly as shown.
- **Minimum rough openings may need to be increased to allow for use of building wraps, flashing, sill panning, brackets, fasteners or other items. See installation information on pages 222-223.**
- Details are for illustration only and are not intended to represent product installation methods or materials. Refer to product installation guides at andersenwindows.com.
- Structural performance of any combination is only as high as the lowest structural performance of any individual product or join in the combination.
- Traditional trim stops shown in joining details. Details also apply to products with contemporary trim stops.
- Dimensions in parentheses are in millimeters.

Horizontal (stack) Joining Details

Scale 1 1/2" (38) = 1'-0" (305) – 1:8

Flexiframe® Over Flexiframe Window

Overall Window Dimension Height

Sum of individual window heights plus 3/16" (5) per join.

Overall Rough Opening Height

Overall window dimension height plus 1/2" (13).

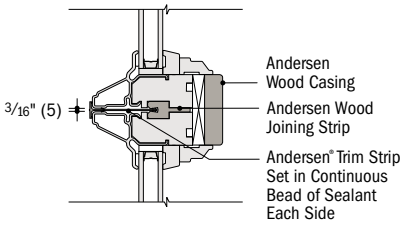

Vertical Section

Flexiframe® Over Casement Window

Overall Window Dimension Height

Sum of individual window heights plus 3/16" (5) per join.

Overall Rough Opening Height

Overall window dimension height plus 1/2" (13).

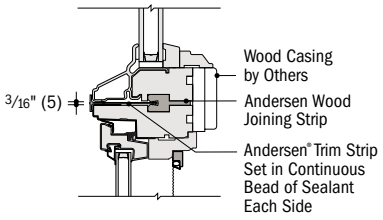

Vertical Section

Flexiframe® Over Tilt-Wash Double-Hung Window

Overall Window Dimension Height

Sum of individual window heights plus 1/8" (3) per join.

Overall Rough Opening Height

Overall window dimension height plus 1/2" (13).

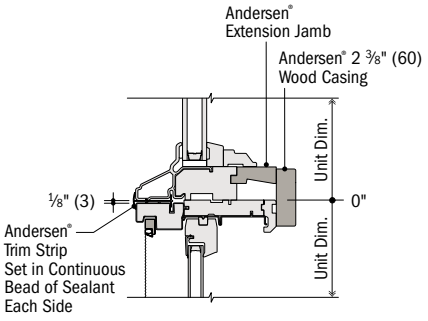

Vertical Section

Vertical joining on previous page. For more information on joining, refer to the Combination Designs section starting on page 183.

Separate Rough Openings Details

Scale 1 1/2" (38) = 1'-0" (305) – 1:8

To meet structural requirements or to achieve a wider joined appearance, windows may be installed into separate rough openings having vertical support by others in combination with Andersen® exterior filler and exterior vinyl trim.

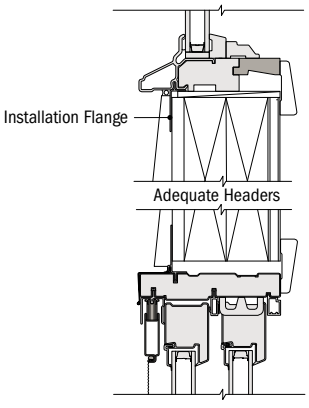

Vertical Section

Flexiframe® and Perma-Shield® Gliding Patio Door

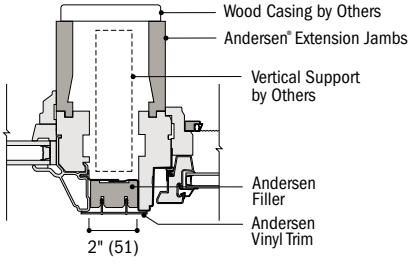

Horizontal Section

Flexiframe® Window and Awning Window

- Light-colored areas are parts included with window. Dark-colored areas are additional Andersen® parts required to complete window assembly as shown.
- **Minimum rough openings may need to be increased to allow for use of building wraps, flashing, sill panning, brackets, fasteners or other items. See installation information on pages 222-223.**
- Details are for illustration only and are not intended to represent product installation methods or materials. Refer to product installation guides at andersenwindows.com.
- Structural performance of any combination is only as high as the lowest structural performance of any individual product or join in the combination.
- Consult with an architect or structural engineer regarding minimum requirements for structural support members between adjacent rough openings.
- Traditional trim stops shown in joining details. Details also apply to products with contemporary trim stops.
- Dimensions in parentheses are in millimeters.



COMPLEMENTARY SPECIALTY WINDOWS

Window Details 142
Joining Details 142
Combination Designs 183
Product Performance 199

CUSTOM SIZING
in ⅛" (3) increments

CUSTOM SIZES

Dimensions in parentheses are in millimeters.

COMPLEMENTARY SPECIALTY WINDOWS

FEATURES

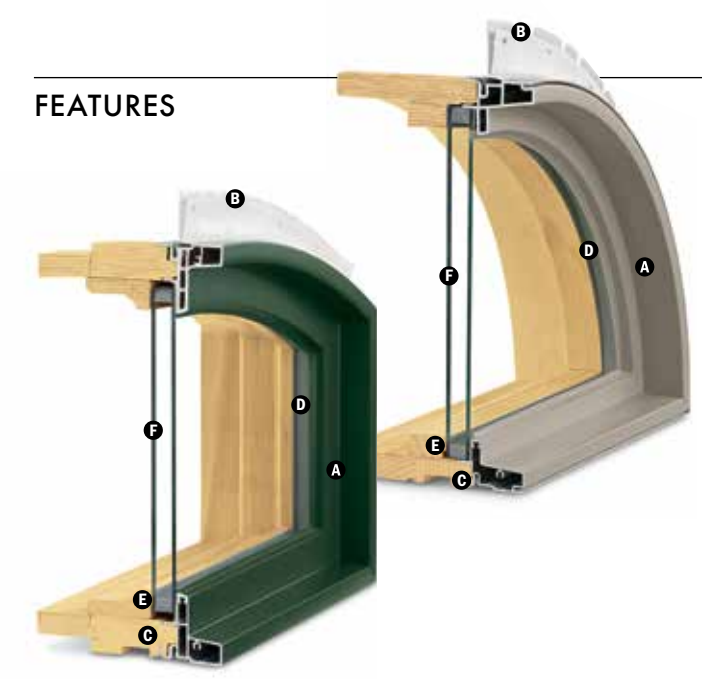

FRAME

A Heavy-duty extruded aluminum cladding protects the frame exterior, providing low-maintenance durability. The standard cladding finish meets AAMA 2604 specification. An optional finish that meets the AAMA 2605 specification is also available.

B A vinyl installation flange extends 1½" (38) around the perimeter of the unit to help properly position the unit in the opening. Installation clips are standard for increased structural anchoring to building members. Mounted around the frame perimeter, the clips rotate into position and can be bent into place against the framing members to suit all jamb conditions.

C Wood frame members are treated with a water-repellent wood preservative for long-lasting* protection and performance. Radii are made of laminated pine veneers. Lineal components are solid or engineered wood with a pine core.

Jamb Options

A variety of basic window jamb designs and depths are available to match 400 Series windows. Specify desired jamb depth when ordering.

CAUTION: Do not paint weatherstrip. Creosote-based stains should not come in contact with Andersen products. Abrasive cleaners or solutions containing corrosive solvents should not be used on Andersen products.

GLASS

D Glass spacers are available in black, stainless steel and white.

E Silicone glazing bead combined with two-sided silicone tape provide superior weathertightness.

F High-Performance glass options include:

- Low-E4® glass
- Low-E4 HeatLock® glass
- Low-E4 SmartSun™ glass
- Low-E4 SmartSun HeatLock glass
- Low-E4 Sun glass
- Low-E4 PassiveSun® HeatLock glass

Tempered and other glass options are available. Contact your Andersen supplier.

A removable translucent film helps shield the glass from damage during delivery and construction, and simplifies finishing at the job site.

Patterned Glass

Patterned glass options are available. See page 11 for more details.

PERFORMANCE OPTIONS

Coastal Windows

Complementary specialty windows are available with Stormwatch® Protection. For more information, visit **andersenwindows.com/coastal** or refer to the Andersen 400 Series Coastal Product Guide for more information.

StormWATCH PROTECTION

EXTERIORS & INTERIORS

EXTERIOR & INTERIOR COLORS



Additional standard interior colors include birch bark or primed for paint. Painted colors are on pine. For custom exterior and interior colors, and interior colors on maple, contact your Andersen supplier.

INTERIOR WOOD SPECIES



Additional standard wood species include vertical-grain Douglas fir, mahogany,** alder and cherry. For mixed-grain Douglas fir, hickory, white oak and walnut, contact your Andersen supplier. All wood interiors are unfinished unless a paint color is specified.

ACCESSORIES Sold Separately

FRAME

Extension Jambs

Base jamb depths are 4 9/16" (116) or 2 7/8" (73). Extension jambs are available in 1/16" (1.5) increments between 4 9/16" (116) and 12" (305). Available for job site application or can be factory applied.

Extension jambs are available in unfinished pine, maple and oak, or prefinished white, dark bronze and black. Additional wood species and prefinished colors are available.

INTERIOR TRIM

Interior Arch Casing, Transition Blocks & Plinth Blocks

Interior arch casing is available in Colonial or Ranch styles, and comes with either transition blocks or plinth blocks, depending on the product. Available in pine, maple and oak. For easy integration, and consistency, dimensions are consistent with the Moulding and Millwork Producers Association specifications.

Transition blocks and plinth blocks provide accents and enhance arch casing transitions. See page 121 for more information.

Colonial- or Ranch-style arch casings are available in the widths provided below.


2 1/4" (57) Colonial style WM366


2 1/2" (64) Colonial style WM351


3 1/2" (89) Colonial style WM444


2 1/4" (57) Ranch style WM324
2 1/2" (64) Ranch style WM315

*Visit andersenwindows.com/warranty for details.

**Actual wood species is either Sapele or Sipo, both non-endangered species grown in Africa, with color and characteristics similar to Central American mahoganies.

Naturally occurring variations in grain, color and texture of wood make each window one of a kind. All wood interiors are unfinished unless a finish is specified.

Printing limitations prevent exact replication of colors. See your Andersen supplier for actual color samples.

Dimensions in parentheses are in millimeters.

SHAPES

Andersen® complementary specialty windows are available in a variety of sizes. Fixed unit profiles may vary dependent upon shape. For specific sizes, details and joining information, contact your Andersen supplier.


Rectangle


Right Triangle


Isosceles Triangle


Trapezoid


Angled Pentagon


Peak Pentagon


Parallelogram


Hexagon


Diamond


Octagon


Unequal Hexagon


Gothic


Half Circle


Quarter Circle


Eyebrow


Partial Eyebrow


Elliptical


Extended Gothic


Springline™


Springline Flanker


Arch


Unequal Leg Arch


Circle


Oval

The additional specialty window shapes below are available, contact your Andersen supplier.


Partial Arch


Partial Elliptical


Reverse Partial Eyebrow


Extended Reverse Partial Eyebrow


Extended Reverse Eyebrow


Quatrefoil


Quarter Arch


Partial Extended Arch


Extended Raised Eyebrow


Extended Raised Eyebrow


Extended Elliptical

Details for Complementary Specialty Windows

Scale 1 1/2" (38) = 1'-0" (305) – 1:8

Complements 400 Series Casement, Awning and Picture Windows

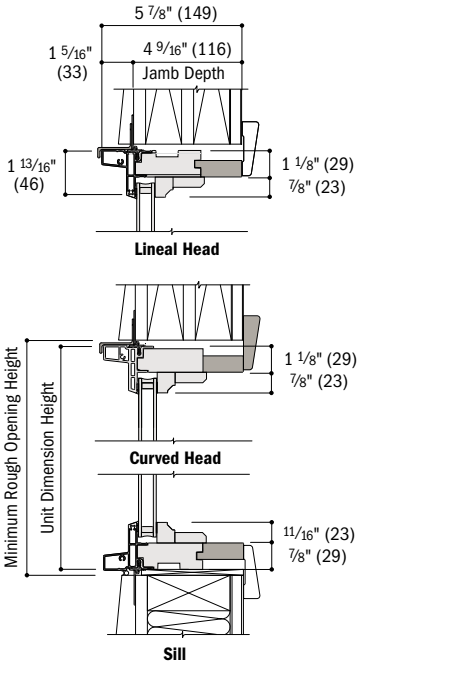

Vertical Section

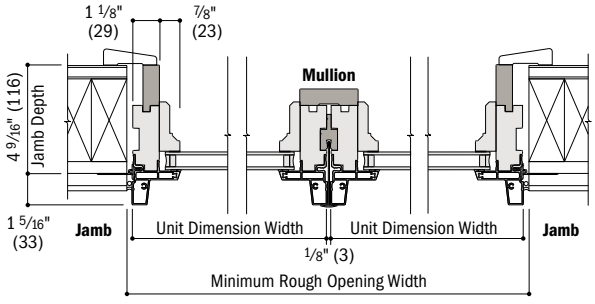

Horizontal Section

Complements 400 Series Double-Hung Windows and Patio Doors

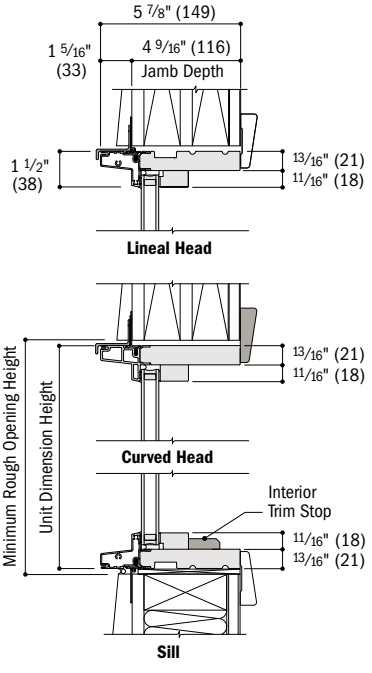

Vertical Section

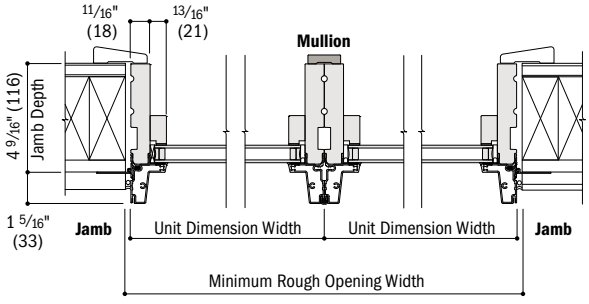

Horizontal Section

Horizontal (stack) Joining Detail

Scale 1 1/2" (38) = 1'-0" (305) – 1:8

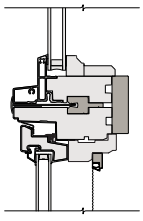

Vertical Section
Complementary Specialty Over
400 Series Casement Window

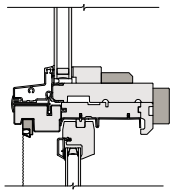

Vertical Section
Complementary Specialty Over
400 Series Tilt-Wash Double-Hung Window

Horizontal (stack) Joining Detail – Fiberglass

Scale 1 1/2" (38) = 1'-0" (305) – 1:8

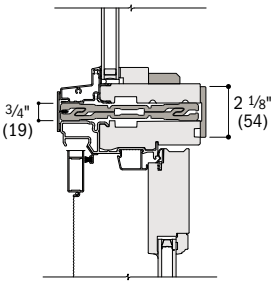

Vertical Section
Complementary Specialty Over
400 Series Frenchwood® Hinged Inswing Patio Door
(Field Joining Kits Only)

For more information on joining, refer to the Combination Designs section starting on page 183.

- 4 9/16" (116) overall jamb depth measurement is from back side of installation flange.
- Light-colored areas are parts included with window. Dark-colored areas are additional Andersen® parts required to complete window assembly as shown.
- **Minimum rough openings may need to be increased to allow for use of building wraps, flashing, sill panning, brackets, fasteners or other items. See installation information on pages 222-223.**
- Details are for illustration only and are not intended to represent product installation methods or materials. Refer to product installation guides at andersenwindows.com.
- Structural performance of any combination is only as high as the lowest structural performance of any individual product or join in the combination.
- Dimensions in parentheses are in millimeters.



FRENCHWOOD® GLIDING PATIO DOORS

Table of Sizes 146
Specifications 148
Custom Sizes 147
Door Details 148-150
Joining Details 150
Grille Patterns 157
Combination Designs 183
Product Performance 199

CUSTOM SIZING
in ⅛" (3) increments

CUSTOM SIZES

Dimensions in parentheses are in millimeters.

FRENCHWOOD® GLIDING PATIO DOORS

FEATURES

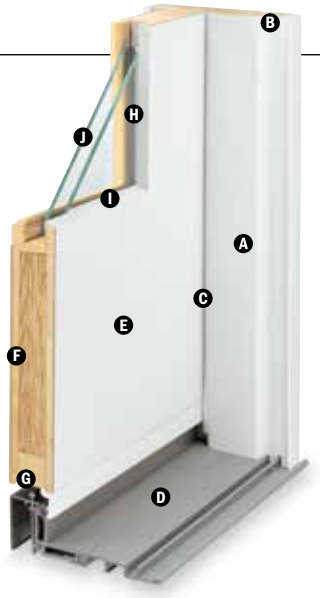

FRAME

A All basic exterior frame members are covered with a Perma-Shield® rigid vinyl sheath that maintains an attractive appearance while minimizing maintenance.

B Wood frame members are treated with a water-repellent preservative for long-lasting* protection and performance. Interior frame trim pieces are unfinished pine. Maple and oak veneers, or prefinished white interior options are available.

Factory-assembled two-panel doors are available and arrive at the job site ready to install. Unassembled doors are also available and require assembly at the job site.

C A flexible vinyl weatherstrip at the head and side jambs provides a positive seal between the frame and panels.

SILL

D The sill has an extruded aluminum track, with a stainless steel cap that resists stains, rust and denting*. A thermal barrier reduces conductive heat loss and limits condensation on the inside. The sill has an attractive wear-resistant heat-baked finish in neutral gray.

PANEL

E The exterior of the wood door panel is protected with a long-lasting* urethane base finish available in white, Sandtone, Terratone and forest green.

F Panel interior surfaces are unfinished pine veneer. Unfinished maple or oak veneers are available as options. Low-maintenance prefinished white interiors are also available.

G Dual ball-bearing rollers on the door panels provide smooth gliding operation with self-contained leveling adjusters.

Mortise-and-Tenon Joints



Panel joints are mortise and tenon, with patented dowel construction for maximum strength.

Flexible Seal



A full-length combination weatherstrip/interlock system provides a flexible seal at the meeting stile.

GLASS

H Glass spacers are available in black, stainless steel and white.

I Panels are silicone bed glazed and finished with an interior wood stop.

J High-Performance dual-pane glass options include:

- Low-E4® tempered glass
- Low-E4 HeatLock® tempered glass
- Low-E4 SmartSun™ tempered glass
- Low-E4 SmartSun HeatLock tempered glass
- Low-E4 Sun tempered glass
- Low-E4 PassiveSun® HeatLock tempered glass

For even greater energy performance, 1" (25) triple-pane glass is available in these options:

- Low-E4 tempered glass
- Low-E4 Enhanced tempered glass
- Low-E4 Enhanced HeatLock tempered glass
- Low-E4 SmartSun tempered glass
- Low-E4 SmartSun Enhanced tempered glass
- Low-E4 SmartSun Enhanced HeatLock tempered glass

Additional glass options are available. Contact your Andersen supplier.

A removable translucent film helps shield the glass from damage during delivery and construction, and simplifies finishing at the job site.

Patterned Glass

Patterned glass options are available. See page 11 for more details.

EXTERIORS & INTERIORS

EXTERIOR COLORS



White | Sandtone | Terratone | Forest Green

INTERIOR OPTIONS

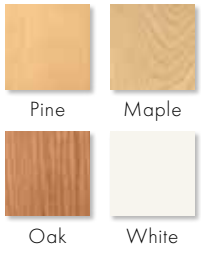

Pine | Maple | Oak | White

HARDWARE Sold Separately



YUMA®
Distressed Bronze
Distressed Nickel

ENCINO®
Distressed Bronze
Distressed Nickel

NEWBURY®
Antique Brass
Bright Brass
Oil Rubbed Bronze
Satin Nickel

ANVERS®
Bright Brass
Oil Rubbed Bronze
Satin Nickel

ALBANY
Black
Stone
White

TRIBECA®
Black
Stone
White

Bold name denotes finish shown.

HARDWARE FINISHES

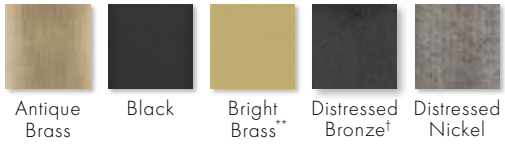

Antique Brass | Black | Bright Brass** | Distressed Bronze† | Distressed Nickel

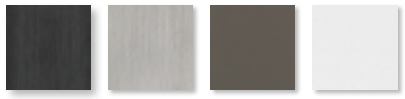

Oil Rubbed Bronze† | Satin Nickel** | Stone | White

*Visit andersenwindows.com/warranty for details.

**Bright brass and satin nickel finishes have a Physical Vapor Deposition (PVD) finish for improved durability, and feature a 10-year limited warranty.

†These finishes are "living finishes" that will change with time and use, see limited warranty for details.

Albany and Tribeca hardware are zinc die cast with a durable powder-coated finish. Other hardware is solid forged brass.

Mix-and-match interior and exterior style and finish options are available.

Andersen® patio doors are not intended for use as entry doors.

Naturally occurring variations in grain, color and texture of wood make each window one of a kind. All wood interiors are unfinished unless a finish is specified.

Printing limitations prevent exact replication of colors and finishes. See your Andersen supplier for actual color and finish samples.

Dimensions in parentheses are in millimeters.

Blinds-Between-the-Glass



Blinds-between-the-glass are available for select gliding patio door sizes when ordered with Low-E4® tempered glass, and a pine or prefinished white door interior and any of our four exterior colors. White ½" (13) aluminum slat blinds come mounted between two panes of insulated glass. Blinds are magnetically controlled and can be tilted, raised and lowered using low-profile controls. Available for 3368, 33611, 6068, 60611, 12068-4 and 120611-4 door sizes. Contact your Andersen supplier for more information.

HARDWARE

PVD Finish

Andersen® bright brass and satin nickel patio door hardware finishes have a Physical Vapor Deposition (PVD) coating. High-quality PVD finishes are especially resistant to corrosion, scratches, and fading for improved hardware durability and extended lifespan.

Reachout Locking Hardware



The unique Andersen® reachout locking hardware pulls the door panel snugly into the jamb for a weathertight seal and enhanced security.

ACCESSORIES Sold Separately

FRAME

Extension Jambs

The base jamb depth is 4 9/16" (116). Pine, maple and oak veneers, or prefinished white interior extension jambs are available in 1/16" (1.5) increments between 5 1/16" (129) and 7 1/8" (181).

Threshold



A maple or oak threshold is available for finishing the interior of the sill.

Ramped Sill Insert

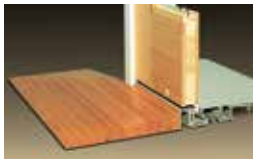

Ramped sills in maple or oak provide a smooth transition from interior to exterior, and can be used with a retractable insect screen but not a gliding insect screen. Check with local and federal officials to determine if product meets accessibility codes.

Sill Support



An aluminum sill support is designed to lock into a channel under the sill and tie back into the wall. This will offer support to the outermost sill section when needed. Available in a neutral gray finish.

HARDWARE

Exterior Keyed Lock



A six-pin key cylinder lock allows the door to be locked and unlocked from the exterior. Available in finishes that coordinate with the hardware.

Auxiliary Foot Lock



Provides an extra measure of security when the door is in a locked position. The lock can be set so the door is fully closed or partially open to provide a secure venting position. Available in all hardware finishes.

INSECT SCREENS

Screens have a long-lasting* fiberglass screen mesh with a charcoal gray finish. Frames are color matched to the exterior of the door.

Gliding Screen

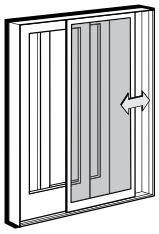

Patented square-corner joint construction adds considerable strength to the frame members. Gliding screens have Delrin® injection-molded bottom rollers with self-contained leveling adjusters, providing smooth operation. Interior and exterior pulls and latch are provided. Available for two-panel doors and four-panel doors.

Retractable Screen

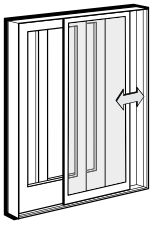

Our premium retractable screen for two- and four-panel doors has an integrated design, allowing it to glide side to side across the width of the opening and disappear when not in use. The screen features high-weather and retention performance, tear-resistant screen mesh and quality metal hardware, along with an owner-to-owner 10-year limited warranty. Available in all exterior colors.

GRILLES

Grilles are available in a variety of configurations and widths. See page 18 for details.

EXTERIOR TRIM

Available with Andersen exterior trim. See the Exterior Trim section starting on page 177.

SIDELIGHTS & TRANSOMS

Andersen Frenchwood® patio door sidelights and transoms feature elegant lines that match our Frenchwood gliding patio doors. Stationary units can also be selected for use as sidelights. See pages 161-164 for details.

CAUTION: Painting and staining may cause damage to rigid vinyl. Andersen does not warrant the adhesion or performance of homeowner-applied paint over vinyl or other factory-coated surfaces. For vinyl painting instructions and preparation, contact your Andersen supplier. Do not paint weatherstrip. Creosote-based stains should not come in contact with Andersen products. Abrasive cleaners or solutions containing corrosive solvents should not be used on Andersen products. See page 223 for a complete list of cautions.

*Visit andersenwindows.com/warranty for details.
"Delrin" is a registered trademark of E.I. du Pont de Nemours and Company.
Dimensions in parentheses are in millimeters.

Patio Door Heights

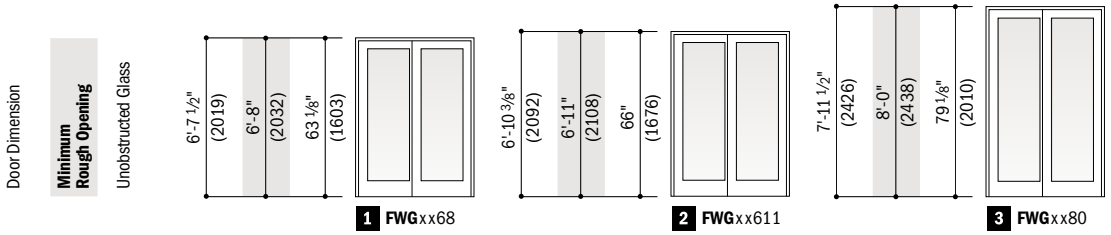

For all four-panel gliding patio doors, add 1/4" (6) to the Minimum Rough Opening height dimension.

Table of Sizes for Frenchwood® Gliding Patio Doors

Scale 1/8" (3) = 1'-0" (305) – 1:96

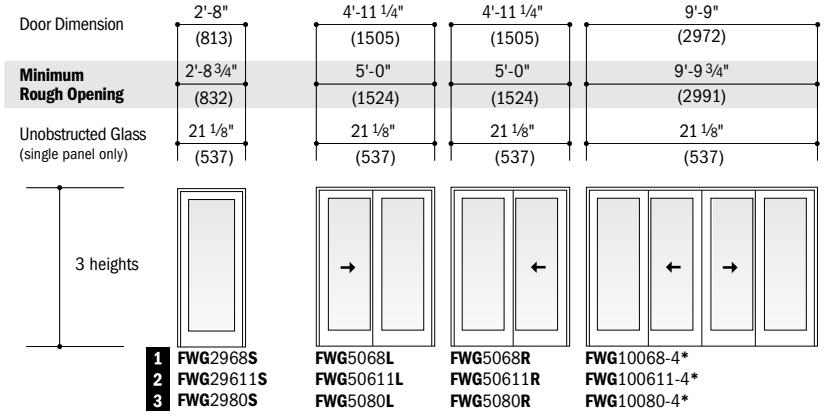

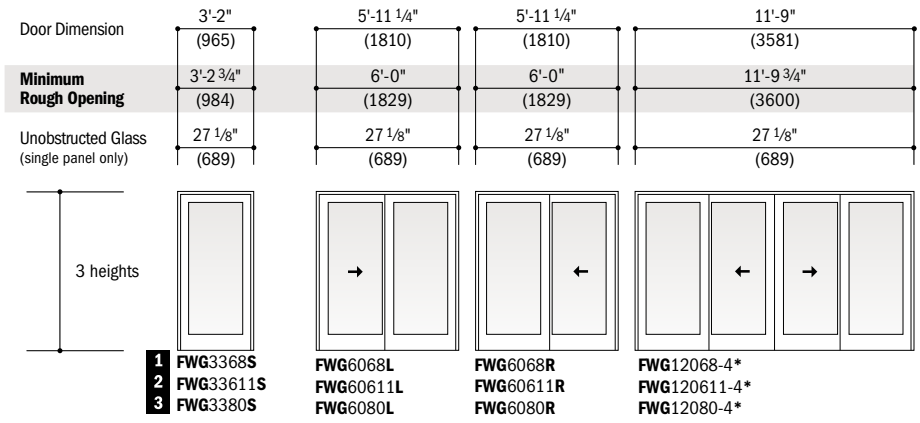

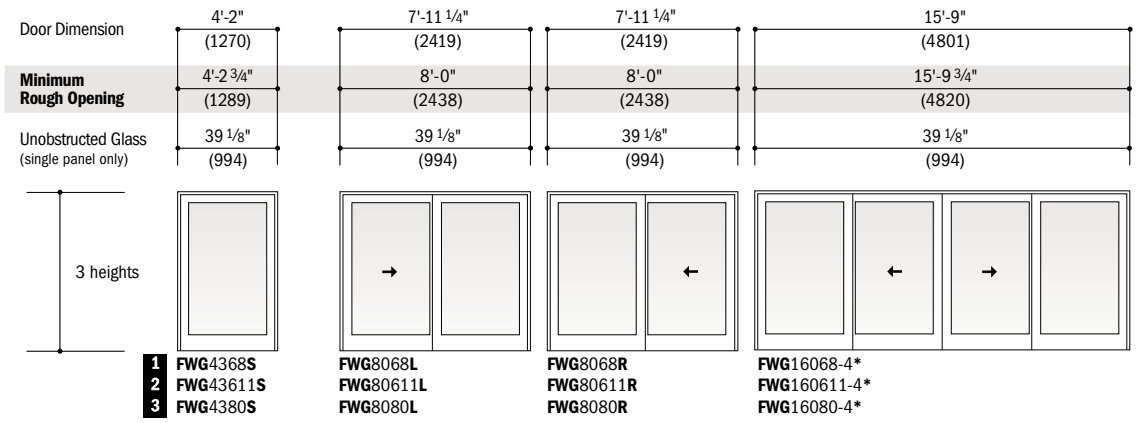



Custom-size patio doors are available in 1/8" (3) increments. See page 147 for custom sizes and specifications.

Viewed from the exterior. Arrow indicates direction of panel operation. Stationary (**S**) doors can be used as an individual unit or as a sidelight. Two-panel doors are available factory assembled and arrive at the job site ready to install.

Grille patterns shown on page 157.

Details shown on pages 148-150.

- Door Dimension always refers to outside frame-to-frame dimension.
- **Minimum Rough Opening dimensions may need to be increased to allow for use of building wraps, flashing, sill panning, brackets, fasteners or other items. See pages 222-223 for more details.**
- Dimensions in parentheses are in millimeters.
- *Add 1/4" (6) to the Minimum Rough Opening height dimension for four-panel doors.

Order Designation Descriptions

Viewed from the exterior.

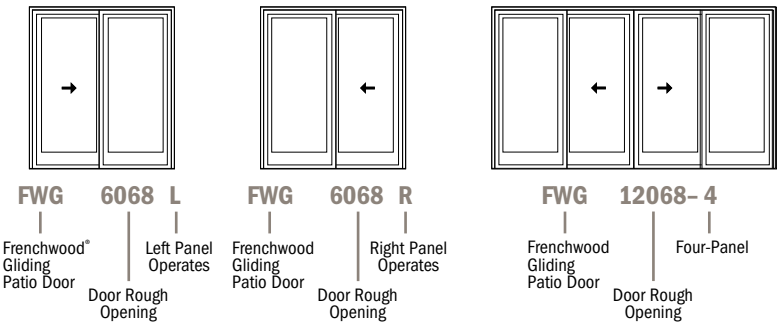

Centerline Astragal Dimensions

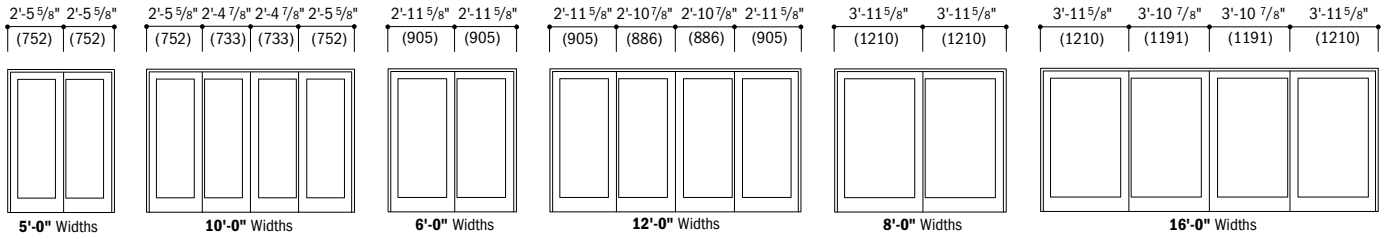

Custom Sizes and Specification Formulas

Available in 1/8" (3) increments between minimum and maximum widths and heights. Some restrictions apply; contact your Andersen supplier.

Measurement guide for custom-size patio doors can be found at **andersenwindows.com/measure**.

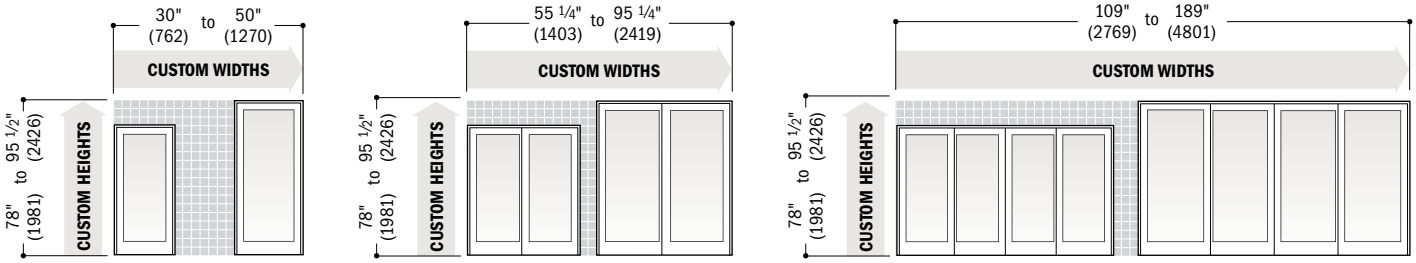

Clear Opening	Minimum R.O.	Unobst. Glass
Two-Panel **Width** = (width ÷ 2) − 7.773" (197) **Height** = height − 4.155" (106) **Four-Panel** **Width** = (width ÷ 2) − 14.322" (364) **Height** = height − 4.155" (106)	**Single-Panel and Two-Panel** **Width** = width + 3/4" (19) **Height** = height + 1/2" (13) **Four-Panel** **Width** = width + 3/4" (19) **Height** = height + 3/4" (19)	**Single-Panel** **Width** = width − 10.876" (276) **Height** = height − 16.391" (416) **Two-Panel** **Width** = width − 17.002" (432) **Height** = height − 16.391" (416) **Four-Panel** **Width** = width − 32.504" (826) **Height** = height − 16.391" (416)

• **Clear Opening** formulas provide dimensions for determining area available for egress. Vent opening, or area available for passage of air, is equal to clear opening. **Minimum R.O.** (minimum rough opening) formulas provide minimum rough opening width and height dimensions. **Unobst. Glass** (unobstructed glass) formulas provide dimensions for determining area available for passage of light.
• Dimensions in parentheses are in millimeters.

Opening and Area Specifications for Frenchwood® Gliding Patio Doors – Two-Panel and Four-Panel

Door Number	Clear Opening Area Sq. Ft./(m²)	Clear Opening in Full Open Position Width Inches/(mm)	Clear Opening in Full Open Position Height Inches/(mm)	Glass Area Sq. Ft./(m²)	Vent Area Sq. Ft./(m²)	Overall Door Area Sq. Ft./(m²)
FWG5068	11.43 (1.06)	21 13/16" (555)	75 5/16" (1914)	18.52 (1.72)	11.43 (1.06)	32.71 (3.04)
FWG6068	14.57 (1.35)	27 13/16" (707)	75 5/16" (1914)	23.77 (2.21)	14.57 (1.35)	39.34 (3.65)
FWG8068	20.85 (1.94)	39 13/16" (1012)	75 5/16" (1914)	34.29 (3.19)	20.85 (1.94)	52.59 (4.89)
FWG10068	23.12 (2.15)	44 1/8" (1122)	75 5/16" (1914)	37.03 (3.44)	23.12 (2.15)	64.59 (6.00)
FWG12068	29.39 (2.73)	56 1/8" (1427)	75 5/16" (1914)	47.55 (4.42)	29.39 (2.73)	77.84 (7.23)
FWG16068	41.95 (3.90)	80 1/8" (2037)	75 5/16" (1914)	68.59 (6.37)	41.95 (3.90)	104.34 (9.69)
FWG50611	11.87 (1.10)	21 13/16" (555)	78 3/16" (1987)	19.36 (1.80)	11.87 (1.10)	33.89 (3.15)
FWG60611	15.13 (1.41)	27 13/16" (707)	78 3/16" (1987)	24.86 (2.31)	15.13 (1.41)	40.76 (3.79)
FWG80611	21.65 (2.01)	39 13/16" (1012)	78 3/16" (1987)	35.85 (3.33)	21.65 (2.01)	54.49 (5.06)
FWG100611	24.00 (2.23)	44 1/8" (1122)	78 3/16" (1987)	38.72 (3.60)	24.00 (2.23)	66.93 (6.22)
FWG120611	30.52 (2.83)	56 1/8" (1427)	78 3/16" (1987)	49.72 (4.62)	30.52 (2.83)	80.66 (7.49)
FWG160611	43.55 (4.05)	80 1/8" (2037)	78 3/16" (1987)	71.71 (6.66)	43.55 (4.05)	108.12 (10.04)
FWG5080	13.86 (1.29)	21 13/16" (555)	91 5/16" (2320)	23.21 (2.16)	13.86 (1.29)	39.29 (3.65)
FWG6080	17.67 (1.64)	27 13/16" (707)	91 5/16" (2320)	29.80 (2.77)	17.67 (1.64)	47.25 (4.39)
FWG8080	25.28 (2.35)	39 13/16" (1012)	91 5/16" (2320)	42.99 (3.99)	25.28 (2.35)	63.17 (5.87)
FWG10080	28.02 (2.60)	44 1/8" (1122)	91 5/16" (2320)	46.42 (4.31)	28.02 (2.60)	77.59 (7.21)
FWG12080	35.64 (3.31)	56 1/8" (1427)	91 5/16" (2320)	59.60 (5.54)	35.64 (3.31)	93.51 (8.69)
FWG16080	50.86 (4.73)	80 1/8" (2037)	91 5/16" (2320)	85.97 (7.99)	50.86 (4.73)	125.34 (11.64)

• Dimensions in parentheses are in millimeters or square meters

Area Specifications for Frenchwood® Gliding Patio Doors – Stationary

Door Number	Glass Area Sq. Ft./(m²)	Overall Door Area Sq. Ft./(m²)
FWG2968	9.26 (0.86)	17.67 (1.64)
FWG3368	11.89 (1.11)	20.98 (1.95)
FWG4368	17.15 (1.59)	27.60 (2.56)
FWG29611	9.68 (0.90)	18.31 (1.70)
FWG33611	12.43 (1.16)	21.74 (2.02)
FWG43611	17.93 (1.67)	28.60 (2.66)
FWG2980	11.60 (1.08)	21.22 (1.97)
FWG3380	14.90 (1.38)	25.20 (2.34)
FWG4380	21.49 (2.00)	33.16 (3.08)

• Dimensions in parentheses are in square meters

Details for Frenchwood® Gliding Patio Doors

Scale 1 1/2" (38) = 1'-0" (305) – 1:8

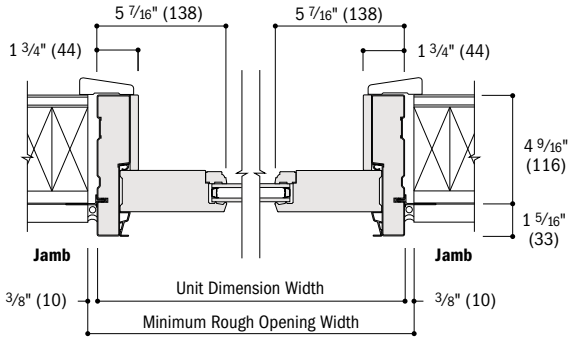

Horizontal Section
Stationary

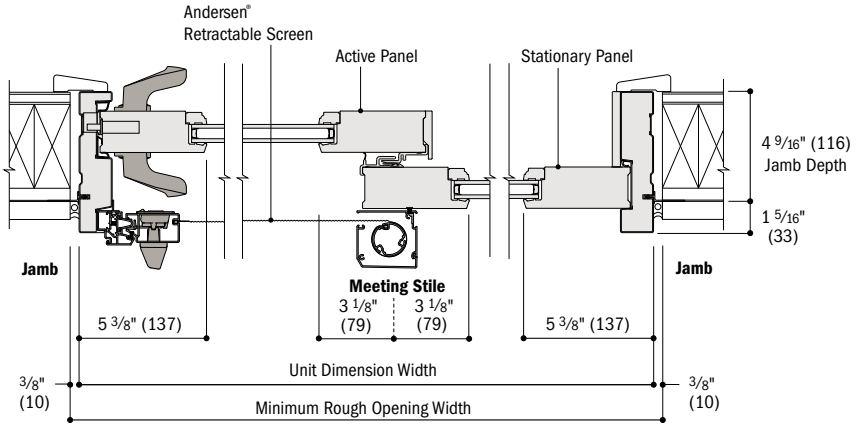

Horizontal Section
Two-Panel

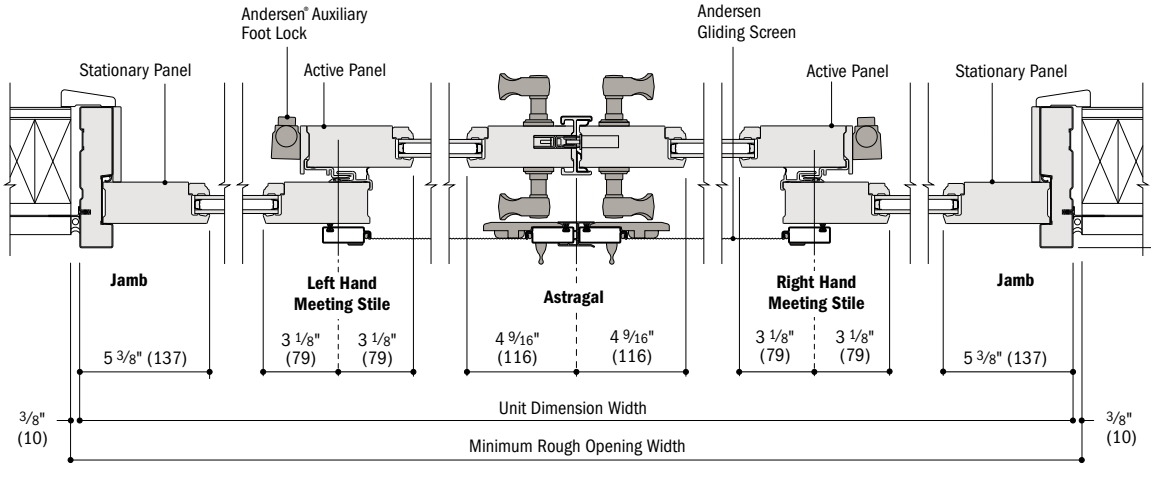

Horizontal Section
Four-Panel

• 4 9/16" (116) overall jamb depth measurement is from back side of installation flange.
• Light-colored areas are parts included with door. Dark-colored areas are additional Andersen® parts required to complete door assembly as shown.
• **Minimum rough openings may need to be increased to allow for use of building wraps, flashing, sill panning, brackets, fasteners or other items. See installation information on pages 222-223.**
• Details are for illustration only and are not intended to represent product installation methods or materials. Refer to product installation guides at andersenwindows.com.
• Dimensions in parentheses are in millimeters.

Details for Frenchwood® Gliding Patio Doors

Scale 1 1/2" (38) = 1'-0" (305) – 1:8

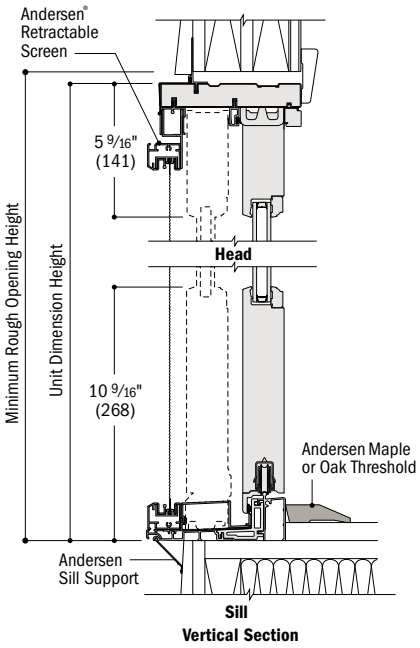

Vertical Section

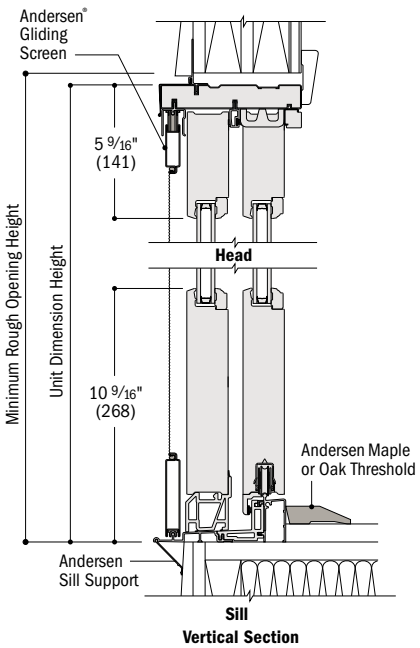

Vertical Section

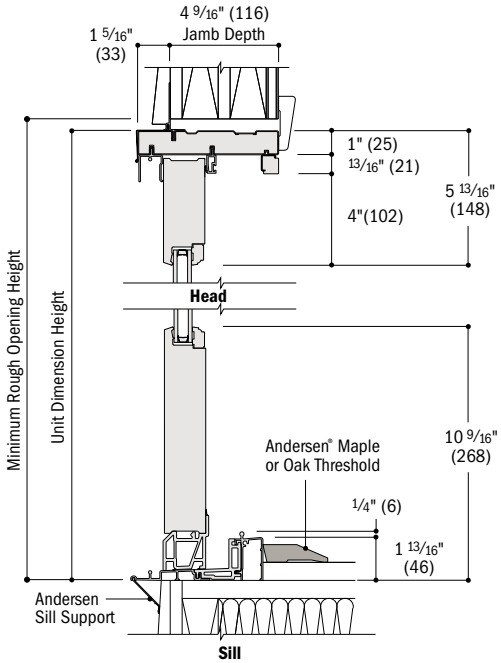

Vertical Section
Stationary

Clear Opening Details

Scale 1 1/2" (38) = 1'-0" (305) – 1:8

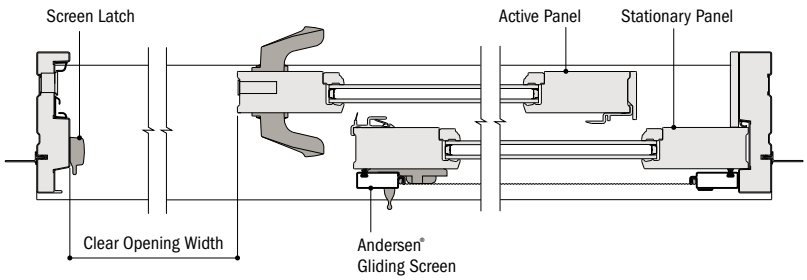

Horizontal Section
Two-Panel

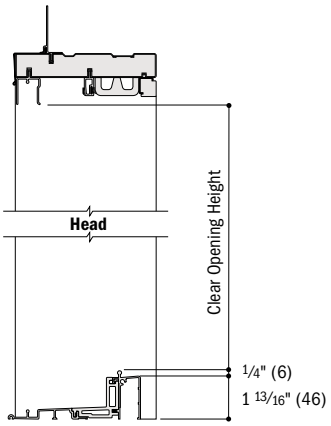

Vertical Section

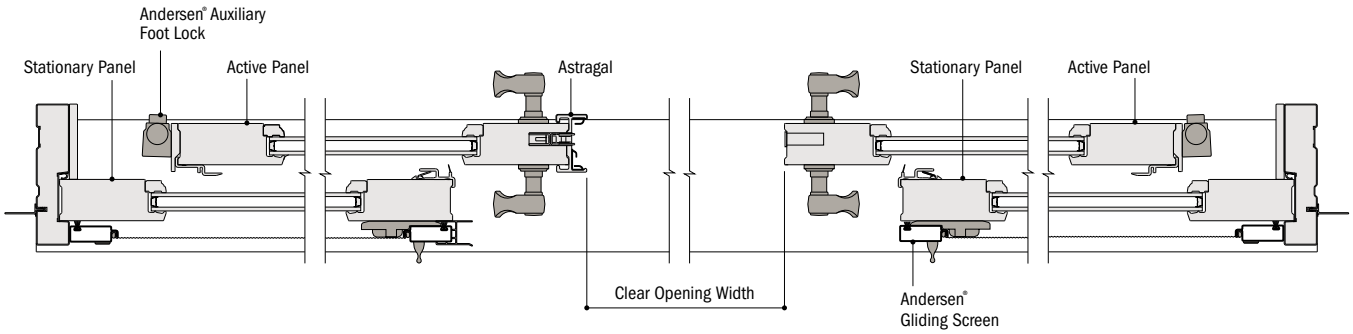

Horizontal Section
Four-Panel

- 4 9/16" (116) overall jamb depth measurement is from back side of installation flange.
- Light-colored areas are parts included with door. Dark-colored areas are additional Andersen® parts required to complete door assembly as shown.
- **Minimum rough openings may need to be increased to allow for use of building wraps, flashing, sill panning, brackets, fasteners or other items. See installation information on pages 222-223.**
- Details are for illustration only and are not intended to represent product installation methods or materials. Refer to product installation guides at andersenwindows.com.
- Dimensions in parentheses are in millimeters.

Ramped Sill Detail

Scale 1 1/2" (38) = 1'-0" (305) – 1:8

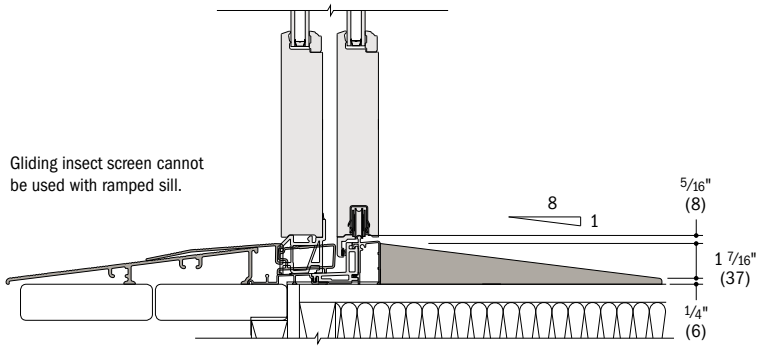

Vertical Joining Detail – Fiberglass

Scale 1 1/2" (38) = 1'-0" (305) – 1:8

Overall Door Dimension Width

Sum of individual door widths plus 3/4" (19) per join.

Overall Rough Opening Width

Overall door width plus 3/4" (19).

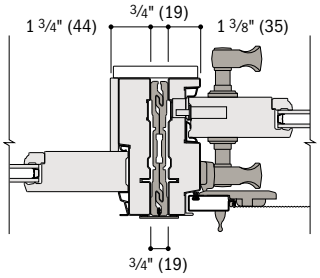

Horizontal Section

Frenchwood® Gliding to Frenchwood Gliding

Vertical Joining Detail – Jamb-to-Jamb

Scale 1 1/2" (38) = 1'-0" (305) – 1:8

Overall Door Dimension Width

Sum of individual door widths plus 1/16" (1.5) per join.

Overall Rough Opening Width

Overall door width plus 3/4" (19).

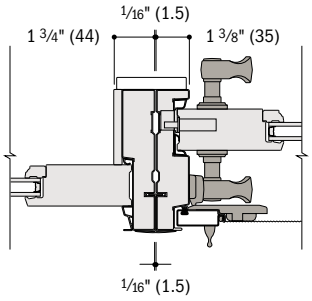

Horizontal Section

Frenchwood® Gliding to Frenchwood Gliding

Andersen does not recommend joining receiver jamb to receiver jamb.

For more information on joining, refer to the Combination Designs section starting on page 183.

Separate Rough Openings Detail

Scale 1 1/2" (38) = 1'-0" (305) – 1:8

To meet structural requirements or to achieve a wider joined appearance, patio doors may be installed into separate rough openings having vertical support by others in combination with Andersen® exterior filler and exterior vinyl trim.

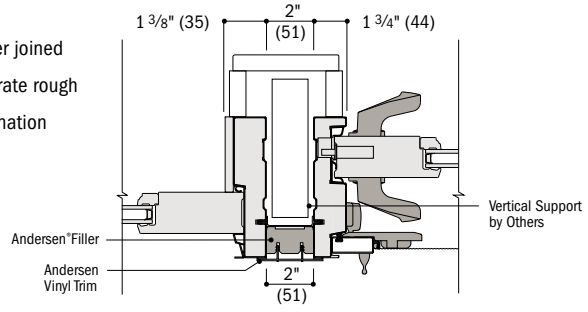

Horizontal Section

Frenchwood® Gliding and Frenchwood Gliding

- Light-colored areas are parts included with door. Dark-colored areas are additional Andersen® parts required to complete door assembly as shown.
- **Minimum rough openings may need to be increased to allow for use of building wraps, flashing, sill panning, brackets, fasteners or other items. See installation information on pages 222-223.**
- Details are for illustration only and are not intended to represent product installation methods or materials. Refer to product installation guides at andersenwindows.com.
- Structural performance of any combination is only as high as the lowest structural performance of any individual product or join in the combination.
- Andersen recommends installation of doors into separate rough openings. Consult with an architect or structural engineer regarding minimum requirements for structural support members between adjacent rough openings.
- Dimensions in parentheses are in millimeters.



FRENCHWOOD® HINGED INSWING PATIO DOORS

Table of Sizes 154-155
Specifications 156
Custom Sizes 157
Grille Patterns 157
Door Details 158-160
Joining Details 160
Combination Designs 183
Product Performance 199

CUSTOM SIZING
in ⅛" (3) increments

CUSTOM SIZES

Dimensions in parentheses are in millimeters.

FRENCHWOOD® HINGED INSWING PATIO DOORS

FEATURES

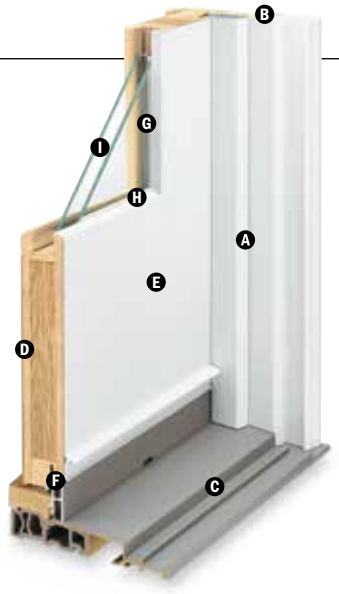

FRAME

A All basic exterior frame members are fiberglass reinforced composite that maintains an attractive appearance while minimizing maintenance.

B The exterior frame members are attached to a water-repellent preservative-treated wood subframe for long-lasting* protection and performance. The subframe is grooved to accept extension jambs.

SILL

C The sill is made with three-piece construction. The subsill is made of Fibrex® material, and the sill step is solid oak. The exterior sill member is made of extruded aluminum with an attractive wear-resistant heat-baked finish in neutral gray. This combination of materials combines durability and low maintenance with excellent insulating characteristics.

PANEL

D Panel interior surfaces are unfinished pine veneer. Unfinished maple or oak veneers are available as options. Low-maintenance prefinished white interiors are also available.

Hinged inswing operating panels are left-hand active, right-hand active or two-panel active-passive jamb hinged.

E The exterior of the wood door panel is protected with a long-lasting* urethane base finish available in white, Sandtone, Terratone and forest green.

F A factory-applied one-piece compression-type rubber weatherstrip continues in one plane around the panel to provide maximum effectiveness against water and air infiltration. Corners of the weatherstrip are welded to eliminate gaps between the panel and the frame/sill shoulder.

GLASS

G Glass spacers are available in black, stainless steel and white.

H Panels are silicone bed glazed and finished with an interior wood stop.

I High-Performance dual-pane glass options include:

- Low-E4® tempered glass
- Low-E4 HeatLock® tempered glass
- Low-E4 SmartSun™ tempered glass
- Low-E4 SmartSun HeatLock tempered glass
- Low-E4 Sun tempered glass
- Low-E4 PassiveSun® HeatLock tempered glass

For even greater energy performance, 1" (25) triple-pane glass is available in these options:

- Low-E4 tempered glass
- Low-E4 Enhanced tempered glass
- Low-E4 Enhanced HeatLock tempered glass
- Low-E4 SmartSun tempered glass
- Low-E4 SmartSun Enhanced tempered glass
- Low-E4 SmartSun Enhanced HeatLock tempered glass

Additional glass options are available. Contact your Andersen supplier.

A removable translucent film helps shield the glass from damage during delivery and construction, and simplifies finishing at the job site.

Patterned glass options are available. See page 11 for more details.

*Visit andersenwindows.com/warranty for details.

**Bright brass and satin nickel finishes have a Physical Vapor Deposition (PVD) finish for improved durability, and feature a 10-year limited warranty.

†These finishes are "living finishes" that will change with time and use, see limited warranty for details.

Albany and Tribeca hardware are zinc die cast with a durable powder-coated finish. Other hardware is solid forged brass.

Mix-and-match interior and exterior style and finish options are available.

Matching hinges are available in most finishes for inswing patio doors.

Andersen patio doors are not intended for use as entry doors.

All trademarks where denoted are marks of their respective owners.

Naturally occurring variations in grain, color and texture of wood make each window one of a kind. All wood interiors are unfinished unless a finish is specified.

EXTERIORS & INTERIORS

EXTERIOR COLORS



White, Sandtone



Terratone, Forest Green

INTERIOR OPTIONS



Pine, Maple

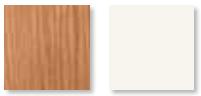

Oak, White

ANDERSEN® HARDWARE Sold Separately



YUMA®
Distressed Bronze
Distressed Nickel



ENCINO®
Distressed Bronze
Distressed Nickel



NEWBURY®
Antique Brass
Bright Brass
Oil Rubbed Bronze
Satin Nickel



ANVERS®
Bright Brass
Oil Rubbed Bronze
Satin Nickel



ALBANY
Black
Stone
White



TRIBECA®
Black
Stone
White

Bold name denotes finish shown.

HARDWARE FINISHES



Antique Brass, Black, Bright Brass**, Distressed Bronze†, Distressed Nickel

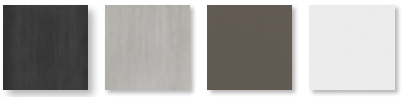

Oil Rubbed Bronze†, Satin Nickel**, Stone, White

DESIGNER HARDWARE Sold Separately

See pages 16-17 for designer hinged patio door hardware options.

In addition to Andersen hardware, Andersen also offers Ashley Norton,® Baldwin® and FSB® designer hardware, which is available in an extensive variety of styles and finishes for hinged patio doors.

Printing limitations prevent exact replication of colors and finishes. See your Andersen supplier for actual color and finish samples.

Dimensions in parentheses are in millimeters.

ACCESSORIES Sold Separately

Blinds-Between-the-Glass



Blinds-between-the-glass are available for select hinged patio door sizes when ordered with Low-E4® tempered glass, and a pine or prefinished white door interior and any of our four exterior colors. White ½" (13) aluminum slat blinds come mounted between two panes of insulated glass. Blinds are magnetically controlled and can be tilted, raised and lowered using low-profile controls. Available in 2768, 27611, 3168, 31611, 5068, 50611, 6068, 60611, 9068 and 90611 door sizes. Contact your Andersen supplier for more information.

HARDWARE

PVD Finish

Andersen® bright brass and satin nickel patio door hardware finishes have a Physical Vapor Deposition (PVD) coating. High-quality PVD finishes are especially resistant to corrosion, scratches, and fading for improved hardware durability and extended lifespan.

Multi-Point Locking System



The multi-point locking system, with a hook bolt above and below the center dead bolt, provides a weathertight seal and enhanced security.

Adjustable Hinges



Adjustable hinges have ball-bearing pivots for smooth, frictionless movement, and feature easy horizontal and vertical adjustments, plus release tabs for easy panel removal. Available in finishes that coordinate with Anderson hardware trim sets.

*Exterior extension jambs for hinged inswing patio doors must be applied before installing into opening.

**Visit andersenwindows.com/warranty for details.

"Delrin" is a registered trademark of E.I. du Pont de Nemours and Company.

Dimensions in parentheses are in millimeters.

FRAME

Interior Extension Jambs

The base jamb depth is 4 9/16" (116). Pine, maple and oak veneers, or prefinished white interior extension jambs are available in 1/16" (1.5) increments between 5 1/16" (129) and 7 1/8" (181). Interior extension jambs will restrict the full opening of the inswing door. See page 157.

Exterior Extension Jambs*

An exterior extension jamb system is available for 5 1/4" (133), 6 9/16" (167) and 7 9/16" (192) wall thicknesses. For walls over 4 1/2" (114), the exterior sill extender and exterior extension jamb system allows the door to be installed flush to the interior, so the hinged door will open flat against the interior wall. Color matched to the exterior of the finished door, this system provides a low-maintenance finished exterior appearance. Exterior extension jambs can also be used with the double screen track.

Threshold



A maple or oak threshold is available for finishing the interior of the sill.

Ramped Sill Insert

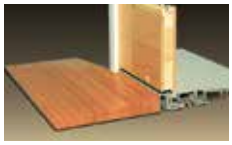

Ramped sills in maple or oak provide a smooth transition from interior to exterior. Ramped sills cannot be used with insect screens. Check with local and federal officials to determine if product meets accessibility codes. Shown with a gliding patio door.

Sill Support



An aluminum sill support is designed to lock into a channel under the sill and tie back into the wall. This will offer support to the outermost sill section when needed. Available in a neutral gray finish.

HARDWARE

Exterior Keyed Lock



A six-pin key cylinder lock allows the door to be locked and unlocked from the exterior. Available in styles and finishes that coordinate with Andersen hardware trim sets.

Handle Extension



Extends interior door handle an additional 1" (25) from the door interior panel to accommodate blinds or shades. Kit includes one handle extender and spindle. A second extender may be added to the spindle to increase the length an additional 1" (25) to a 2" (51) total extension. Extenders are available in finishes that coordinate with Andersen hardware trim sets.

Strike Plate Extensions

Antique brass, bright brass, oil rubbed bronze and satin nickel strike plate extensions are available for 5 1/4" (133), 6 9/16" (167), 7 1/8" (181) and 7 9/16" (192) wall depths.

Construction Lock



This hardware can be used to help secure the structure during the construction phase of the project. It features an undersized escutcheon plate, which makes on-site finishing easier.

Panel Stop



A hinged door panel stop helps prevent wall damage when opening an inswing door. Available in finishes that coordinate with Andersen door hardware.

ANDERSEN® ART GLASS

Andersen art glass panels come in a variety of original patterns. For more information, see the Art Glass section starting on page 175 or visit andersenwindows.com/artglass.

INSECT SCREENS

Screens have a long-lasting** fiberglass screen mesh with a charcoal gray finish. Frames are color matched to the exterior of the door.

Gliding Screen

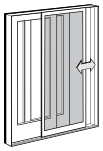

Available for all two- and three-panel doors. Features Delrin® material injection-molded bottom rollers with self-contained leveling adjusters. Gliding screens are not available for 4' (1219)-wide doors. A double-screen track is required for some two-panel doors, see below.

Double-Screen Track



A double-screen track is required to install gliding insect screens on two-panel doors when both panels open.

Hinged Screens

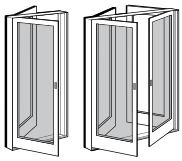

Available for single-panel doors and two-panel doors when both panels open.

GRILLES

Grilles are available in a variety of configurations and widths. See page 18 for details.

EXTERIOR TRIM

Available with Andersen exterior trim. See the Exterior Trim section starting on page 175.

SIDELIGHTS & TRANSOMS

Andersen Frenchwood® patio door sidelights and transoms feature elegant lines that match our Frenchwood hinged patio doors. See pages 161-164 for details.

CAUTION: Painting and staining may cause damage to rigid vinyl. Andersen does not warrant the adhesion or performance of homeowner-applied paint over vinyl or other factory-coated surfaces. For vinyl painting instructions and preparation, contact your Andersen supplier. Do not paint weatherstrip. Creosote-based stains should not come in contact with Andersen products. Abrasive cleaners or solutions containing corrosive solvents should not be used on Andersen products. See page 223 for a complete list of cautions.

Table of Sizes for Frenchwood® Hinged Inswing Patio Doors

Scale 1⁄8" (3) = 1'-0" (305) – 1:96

Door Dimension	2'-0 1⁄2" (620)			4'-0" (1219)	4'-0" (1219)			
Minimum Rough Opening	2'-1" (634)			4'-1" (1242)	4'-1" (1242)			
Unobstructed Glass (single panel only)	13 1⁄4" (336)			13 1⁄4" (336)	13 1⁄4" (336)			
3 heights								
1	**FWH**2168**S**			**FWH**4168**APLR**	**FWH**4168**PALR**			
2	**FWH**21611**S**			**FWH**41611**APLR**	**FWH**41611**PALR**			
3	**FWH**2180**S**			**FWH**4180**APLR**	**FWH**4180**PALR**			

Door Dimension	2'-6 1⁄8" (765)	2'-6 1⁄8" (765)	2'-6 1⁄8" (765)	4'-11 1⁄4" (1504)	4'-11 1⁄4" (1504)	4'-11 1⁄4" (1504)	4'-11 1⁄4" (1504)	4'-11 1⁄4" (1504)
Minimum Rough Opening	2'-7" (787)	2'-7" (787)	2'-7" (787)	5'-0" (1524)	5'-0" (1524)	5'-0" (1524)	5'-0" (1524)	5'-0" (1524)
Unobstructed Glass (single panel only)	18 7⁄8" (479)	18 7⁄8" (479)	18 7⁄8" (479)	18 7⁄8" (479)	18 7⁄8" (479)	18 7⁄8" (479)	18 7⁄8" (479)	18 7⁄8" (479)
3 heights								
1	**FWH**2768**S**	**FWH**2768**AR**	**FWH**2768**AL**	**FWH**5068**SS**	**FWH**5068**ASR**	**FWH**5068**SAL**	**FWH**5068**APLR**	**FWH**5068**PALR**
2	**FWH**27611**S**	**FWH**27611**AR**	**FWH**27611**AL**	**FWH**50611**SS**	**FWH**50611**ASR**	**FWH**50611**SAL**	**FWH**50611**APLR**	**FWH**50611**PALR**
3	**FWH**2780**S**	**FWH**2780**AR**	**FWH**2780**AL**	**FWH**5080**SS**	**FWH**5080**ASR**	**FWH**5080**SAL**	**FWH**5080**APLR**	**FWH**5080**PALR**

Door Dimension	2'-8 1⁄8" (816)	2'-8 1⁄8" (816)	2'-8 1⁄8" (816)	5'-3 1⁄4" (1607)	5'-3 1⁄4" (1607)	5'-3 1⁄4" (1607)	5'-3 1⁄4" (1607)	5'-3 1⁄4" (1607)
Minimum Rough Opening	2'-9" (838)	2'-9" (838)	2'-9" (838)	5'-4" (1626)	5'-4" (1626)	5'-4" (1626)	5'-4" (1626)	5'-4" (1626)
Unobstructed Glass (single panel only)	20 7⁄8" (530)	20 7⁄8" (530)	20 7⁄8" (530)	20 7⁄8" (530)	20 7⁄8" (530)	20 7⁄8" (530)	20 7⁄8" (530)	20 7⁄8" (530)
3 heights								
1	**FWH**2968**S**	**FWH**2968**AR**	**FWH**2968**AL**	**FWH**5468**SS**	**FWH**5468**ASR**	**FWH**5468**SAL**	**FWH**5468**APLR**	**FWH**5468**PALR**
2	**FWH**29611**S**	**FWH**29611**AR**	**FWH**29611**AL**	**FWH**54611**SS**	**FWH**54611**ASR**	**FWH**54611**SAL**	**FWH**54611**APLR**	**FWH**54611**PALR**
3	**FWH**2980**S**	**FWH**2980**AR**	**FWH**2980**AL**	**FWH**5480**SS**	**FWH**5480**ASR**	**FWH**5480**SAL**	**FWH**5480**APLR**	**FWH**5480**PALR**

Door Dimension	3'-0 1⁄8" (918)	3'-0 1⁄8" (918)	3'-0 1⁄8" (918)	5'-11 1⁄4" (1810)	5'-11 1⁄4" (1810)	5'-11 1⁄4" (1810)	5'-11 1⁄4" (1810)	5'-11 1⁄4" (1810)
Minimum Rough Opening	3'-1" (940)	3'-1" (940)	3'-1" (940)	6'-0" (1829)	6'-0" (1829)	6'-0" (1829)	6'-0" (1829)	6'-0" (1829)
Unobstructed Glass (single panel only)	24 7⁄8" (632)	24 7⁄8" (632)	24 7⁄8" (632)	24 7⁄8" (632)	24 7⁄8" (632)	24 7⁄8" (632)	24 7⁄8" (632)	24 7⁄8" (632)
3 heights								
1	**FWH**3168**S**	**FWH**3168**AR**	**FWH**3168**AL**	**FWH**6068**SS**	**FWH**6068**ASR**	**FWH**6068**SAL**	**FWH**6068**APLR**	**FWH**6068**PALR**
2	**FWH**31611**S**	**FWH**31611**AR**	**FWH**31611**AL**	**FWH**60611**SS**	**FWH**60611**ASR**	**FWH**60611**SAL**	**FWH**60611**APLR**	**FWH**60611**PALR**
3	**FWH**3180**S**	**FWH**3180**AR**	**FWH**3180**AL**	**FWH**6080**SS**	**FWH**6080**ASR**	**FWH**6080**SAL**	**FWH**6080**APLR**	**FWH**6080**PALR**

Custom-size patio doors are available in 1⁄8" (3) increments. See page 157 for custom sizes and specifications.

Viewed from the exterior. Stationary (**S**) doors can be used as an individual unit or as a sidelight. In addition to venting door panels shown in the table, other standard configurations are available for two- and three-panel doors. Grille patterns shown on page 157. Details shown on pages 158-160.

- Door Dimension always refers to outside frame-to-frame dimension.
- **Minimum Rough Opening dimensions may need to be increased to allow for use of building wraps, flashing, sill panning, brackets, fasteners or other items. See pages 222-223 for more details.**
- Dimensions in parentheses are in millimeters.

Patio Door Heights

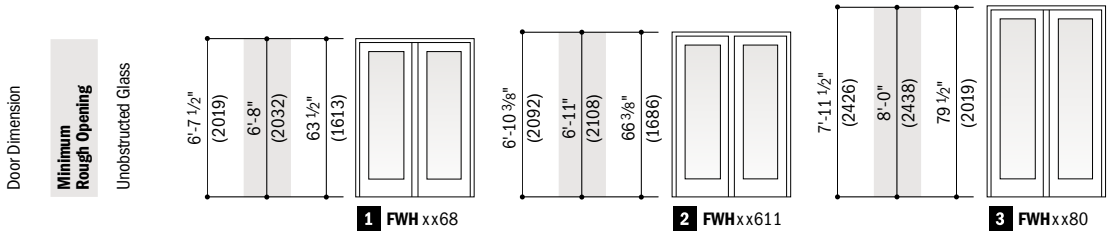

Order Designation Description

Viewed from the exterior.

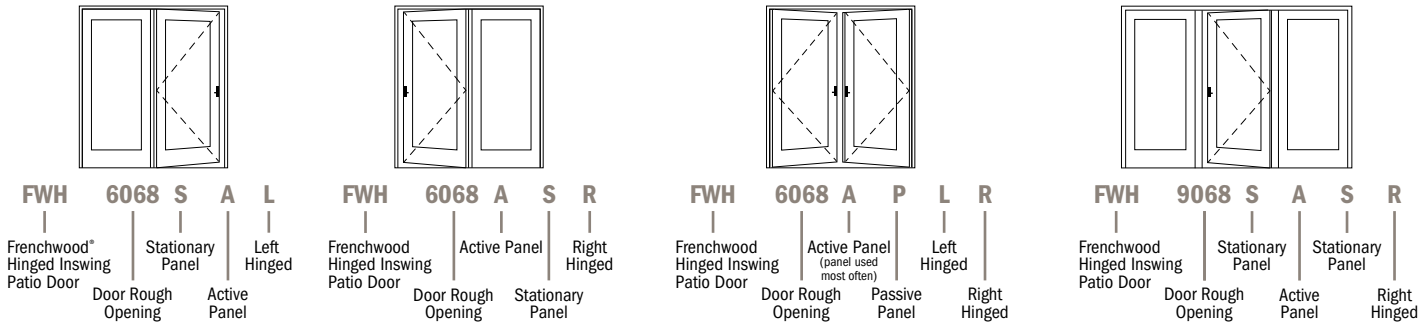

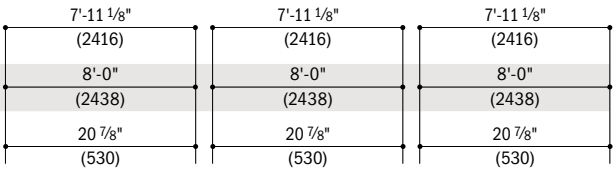

FWH8068**SSS**
FWH80611**SSS**
FWH8080**SSS**

FWH8068**SASR**
FWH80611**SASR**
FWH8080**SASR**

FWH8068**SASL**
FWH80611**SASL**
FWH8080**SASL**

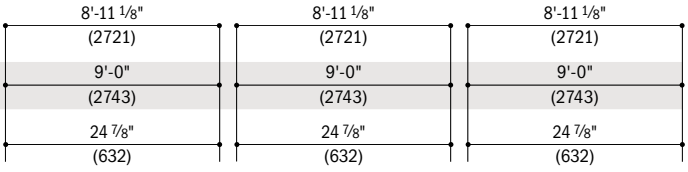

FWH9068**SSS**
FWH90611**SSS**
FWH9080**SSS**

FWH9068**SASR**
FWH90611**SASR**
FWH9080**SASR**

FWH9068**SASL**
FWH90611**SASL**
FWH9080**SASL**

- Door Dimension always refers to outside frame-to-frame dimension.
- **Minimum Rough Opening dimensions may need to be increased to allow for use of building wraps, flashing, sill panning, brackets, fasteners or other items. See pages 222-223 for more details.**
- Dimensions in parentheses are in millimeters.

Opening and Area Specifications for Frenchwood® Hinged Inswing Patio Doors

Door Number	Number of Panels in Open Position*	Clear Opening Maximums													
		Clear Opening Area Sq. Ft./(m²)		90° Open Position Width Inches/(mm)		Full Open Position Width Inches/(mm)		Height Inches/(mm)		Glass Area Sq. Ft./(m²)		Vent Area Sq. Ft./(m²)		Overall Door Area Sq. Ft./(m²)	
FWH2168**S**	-	-		-		-		-		5.74	(0.53)	-		13.39	(1.24)
FWH2768	1	12.98	(1.21)	24 13/16"	(630)	26"	(660)	75 1/4"	(1911)	8.32	(0.77)	12.98	(1.21)	16.63	(1.55)
FWH2968	1	14.02	(1.30)	26 13/16"	(681)	28"	(711)	75 1/4"	(1911)	9.20	(0.86)	14.02	(1.30)	17.74	(1.65)
FWH3168	1	16.11	(1.50)	30 13/16"	(783)	32"	(813)	75 1/4"	(1911)	10.96	(1.02)	16.11	(1.50)	19.95	(1.85)
FWH4168	2	21.43	(1.99)	41"	(1039)	43 7/8"	(1112)	75 1/4"	(1911)	11.68	(1.09)	21.43	(1.99)	26.50	(2.46)
FWH4168	1	11.01	(1.02)	19 7/8"	(505)	21 1/16"	(535)	75 1/4"	(1911)	11.68	(1.09)	11.01	(1.02)	26.50	(2.46)
FWH5068	1 - AS/SA	12.98	(1.21)	24 13/16"	(630)	26"	(660)	75 1/4"	(1911)	16.64	(1.55)	12.98	(1.21)	32.71	(3.04)
FWH5068	2 - AP/PA	27.30	(2.54)	52 1/4"	(1327)	55 1/8"	(1400)	75 1/4"	(1911)	16.64	(1.55)	27.30	(2.54)	32.71	(3.04)
FWH5068	1 - AP/PA	13.32	(1.23)	25 1/2"	(647)	26 11/16"	(678)	75 1/4"	(1911)	16.64	(1.55)	13.32	(1.23)	32.71	(3.04)
FWH5468	1 - AS/SA	14.02	(1.30)	26 13/16"	(681)	28"	(711)	75 1/4"	(1911)	18.39	(1.71)	14.02	(1.30)	34.92	(3.24)
FWH5468	2 - AP/PA	29.39	(2.73)	56 1/4"	(1429)	59 1/8"	(1502)	75 1/4"	(1911)	18.39	(1.71)	29.39	(2.73)	34.92	(3.24)
FWH5468	1 - AP/PA	14.37	(1.33)	27 1/2"	(698)	28 11/16"	(729)	75 1/4"	(1911)	18.39	(1.71)	14.37	(1.33)	34.92	(3.24)
FWH6068	1 - AS/SA	16.11	(1.50)	30 13/16"	(783)	32"	(813)	75 1/4"	(1911)	21.92	(2.04)	16.11	(1.50)	39.34	(3.66)
FWH6068	2 - AP/PA	33.58	(3.12)	64 1/2"	(1632)	67 1/8"	(1705)	75 1/4"	(1911)	21.92	(2.04)	33.58	(3.12)	39.34	(3.66)
FWH6068	1 - AP/PA	16.46	(1.52)	31 1/2"	(800)	32 11/16"	(830)	75 1/4"	(1911)	21.92	(2.04)	16.46	(1.52)	39.34	(3.66)
FWH8068	1	14.02	(1.30)	26 13/16"	(681)	28"	(711)	75 1/4"	(1911)	27.60	(2.56)	14.02	(1.30)	52.52	(4.88)
FWH9068	1	16.11	(1.50)	30 13/16"	(783)	32"	(813)	75 1/4"	(1911)	32.88	(3.06)	16.11	(1.50)	59.14	(5.49)
FWH21611**S**	-	-		-		-		-		6.01	(0.56)	-		13.89	(1.29)
FWH27611	1	13.48	(1.25)	24 13/16"	(630)	26"	(660)	78 1/8"	(1984)	8.69	(0.81)	13.48	(1.25)	17.21	(1.60)
FWH29611	1	14.55	(1.35)	26 13/16"	(681)	28"	(711)	78 1/8"	(1984)	9.61	(0.89)	14.55	(1.35)	18.36	(1.71)
FWH31611	1	16.72	(1.55)	30 13/16"	(783)	32"	(813)	78 1/8"	(1984)	11.45	(1.06)	16.72	(1.55)	20.64	(1.92)
FWH41611	2	22.24	(2.07)	41"	(1039)	43 7/8"	(1112)	78 1/8"	(1984)	12.20	(1.13)	22.24	(2.07)	27.46	(2.55)
FWH41611	1	11.43	(1.06)	19 7/8"	(505)	21 1/16"	(535)	78 1/8"	(1984)	12.20	(1.13)	11.43	(1.06)	27.46	(2.55)
FWH50611	1 - AS/SA	13.48	(1.25)	24 13/16"	(630)	26"	(660)	78 1/8"	(1984)	17.38	(1.62)	13.48	(1.25)	33.89	(3.15)
FWH50611	2 - AP/PA	28.34	(2.63)	52 1/4"	(1327)	55 1/8"	(1400)	78 1/8"	(1984)	17.38	(1.62)	28.34	(2.63)	33.89	(3.15)
FWH50611	1 - AP/PA	13.83	(1.28)	25 1/2"	(647)	26 11/16"	(678)	78 1/8"	(1984)	17.38	(1.62)	13.83	(1.28)	33.89	(3.15)
FWH54611	1 - AS/SA	14.55	(1.35)	26 13/16"	(681)	28"	(660)	78 1/8"	(1984)	19.22	(1.79)	14.55	(1.35)	36.18	(3.36)
FWH54611	2 - AP/PA	30.51	(2.83)	56 1/4"	(1429)	59 1/8"	(1502)	78 1/8"	(1984)	19.22	(1.79)	30.51	(2.83)	36.18	(3.36)
FWH54611	1 - AP/PA	14.91	(1.58)	27 1/2"	(698)	28 11/16"	(729)	78 1/8"	(1984)	19.22	(1.79)	14.91	(1.58)	36.18	(3.36)
FWH60611	1 - AS/SA	16.72	(1.55)	30 13/16"	(783)	32"	(813)	78 1/8"	(1984)	22.91	(2.13)	16.72	(1.55)	40.76	(3.79)
FWH60611	2 - AP/PA	34.86	(3.24)	64 1/2"	(1632)	67 1/8"	(1705)	78 1/8"	(1984)	22.91	(2.13)	34.86	(3.24)	40.76	(3.79)
FWH60611	1 - AP/PA	17.08	(1.68)	31 1/2"	(800)	32 11/16"	(830)	78 1/8"	(1984)	22.91	(2.13)	17.08	(1.68)	40.76	(3.79)
FWH80611	1	14.55	(1.35)	26 13/16"	(681)	28"	(660)	78 1/8"	(1984)	28.83	(2.68)	14.55	(1.35)	54.43	(5.06)
FWH90611	1	16.72	(1.55)	30 13/16"	(783)	32"	(813)	78 1/8"	(1984)	34.36	(3.19)	16.72	(1.55)	61.30	(5.70)
FWH2180**S**	-	-		-		-		-		7.19	(0.67)	-		16.08	(1.49)
FWH2780	1	15.73	(1.46)	24 13/16"	(630)	26"	(660)	91 1/4"	(2318)	10.41	(0.97)	15.73	(1.46)	19.98	(1.86)
FWH2980	1	17.00	(1.58)	26 13/16"	(681)	28"	(711)	91 1/4"	(2318)	11.52	(1.07)	17.00	(1.58)	21.31	(1.98)
FWH3180	1	19.54	(1.82)	30 13/16"	(783)	32"	(813)	91 1/4"	(2318)	13.72	(1.28)	19.54	(1.82)	23.96	(2.23)
FWH4180	2	25.98	(2.41)	41"	(1039)	43 7/8"	(1112)	91 1/4"	(2318)	14.62	(1.36)	25.98	(2.41)	31.83	(2.96)
FWH4180	1	13.35	(1.24)	19 7/8"	(505)	21 1/16"	(535)	91 1/4"	(2318)	14.62	(1.36)	13.35	(1.24)	31.83	(2.96)
FWH5080	1 - AS/SA	15.73	(1.46)	24 13/16"	(630)	26"	(660)	91 1/4"	(2318)	20.82	(1.93)	15.73	(1.46)	39.30	(3.65)
FWH5080	2 - AP/PA	33.11	(3.08)	52 1/4"	(1327)	55 1/8"	(1400)	91 1/4"	(2318)	20.82	(1.93)	33.11	(3.08)	39.30	(3.65)
FWH5080	1 - AP/PA	16.15	(1.50)	25 1/2"	(647)	26 11/16"	(678)	91 1/4"	(2318)	20.82	(1.93)	16.15	(1.50)	39.30	(3.65)
FWH5480	1 - AS/SA	17.00	(1.58)	26 13/16"	(681)	28"	(660)	91 1/4"	(2318)	23.03	(2.14)	17.00	(1.58)	41.95	(3.90)
FWH5480	2 - AP/PA	35.64	(3.31)	56 1/4"	(1429)	59 1/8"	(1502)	91 1/4"	(2318)	23.03	(2.14)	35.64	(3.31)	41.95	(3.90)
FWH5480	1 - AP/PA	17.42	(1.61)	27 1/2"	(698)	28 11/16"	(729)	91 1/4"	(2318)	23.03	(2.14)	17.42	(1.61)	41.95	(3.90)
FWH6080	1 - AS/SA	19.54	(1.82)	30 13/16"	(783)	32"	(813)	91 1/4"	(2318)	27.44	(2.55)	19.54	(1.82)	47.25	(4.39)
FWH6080	2 - AP/PA	40.71	(3.78)	64 1/2"	(1632)	67 1/8"	(1705)	91 1/4"	(2318)	27.44	(2.55)	40.71	(3.78)	47.25	(4.39)
FWH6080	1 - AP/PA	19.96	(1.85)	31 1/2"	(800)	32 11/16"	(830)	91 1/4"	(2318)	27.44	(2.55)	19.96	(1.85)	47.25	(4.39)
FWH8080	1	17.00	(1.58)	26 13/16"	(681)	28"	(660)	91 1/4"	(2318)	34.55	(3.21)	17.00	(1.58)	63.09	(5.86)
FWH9080	1	19.54	(1.82)	30 13/16"	(783)	32"	(813)	91 1/4"	(2318)	41.16	(3.82)	19.54	(1.82)	71.05	(6.60)

• Dimensions in parentheses are in millimeters or square meters.
*For two-panel active-passive or passive-active patio doors with one panel open, clear opening is based on active panel open and passive panel closed.

Custom Sizes and Specification Formulas

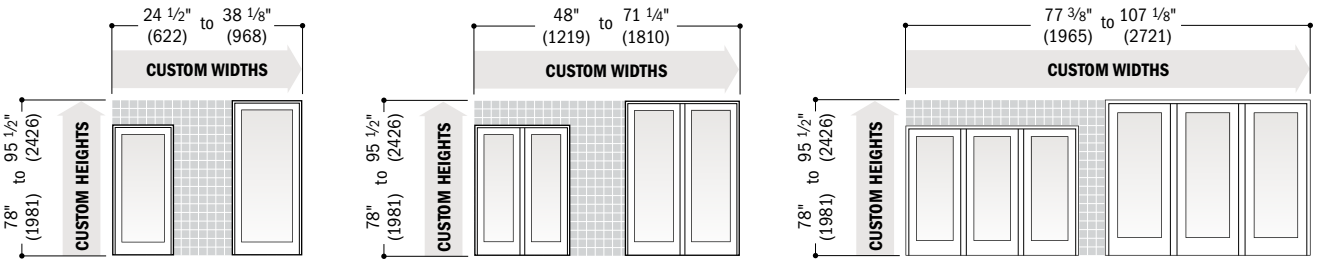

Clear Opening	Minimum R.O.	Unobst. Glass
Height = height − 4.22" (107) **Single-Panel** **Width =** width − 5.744" (145) **Two-Panel, two panels open** **Width =** width − 7.394" (187) **Two-Panel, one panel open** **Width =** (width − 10.550" (267)) ÷ 2 **Three-Panel** **Width =** (width − 16.106" (409)) ÷ 3	**Width =** width + 3/4" (19) **Height =** height + 1/2" (13)	**Single-Panel** **Width =** width − 11.22" (285) **Height =** height − 16.05" (408) **Two-Panel** **Width =** width − 21.5" (546) **Height =** height − 16.05" (408) **Three-Panel** **Width =** width − 32.55" (827) **Height =** height − 16.05" (408)

Available in 1/8" (3) increments between minimum and maximum widths and heights. Some restrictions apply; contact your Andersen supplier. Measurement guide can be found at **andersenwindows.com/measure**.

- **Clear Opening** formulas provide dimensions for determining area available for egress. Vent opening, or area available for passage of air, is equal to clear opening. **Minimum R.O.** (minimum rough opening) formulas provide minimum rough opening width and height dimensions. **Unobst. Glass** (unobstructed glass) formulas provide dimensions for determining area available for passage of light.
- Clear opening width formulas are based on panel(s) in a 90° open position.
- Dimensions in parentheses are in millimeters.

Grille Patterns

	Prairie A	Colonial	Modified Colonial	Modified Colonial with Simulated Meeting Rail	Tall Fractional	Tall Fractional with Simulated Meeting Rail	Short Fractional	Short Fractional with Simulated Meeting Rail
Frenchwood® Gliding and Hinged Inswing Patio Doors	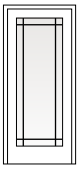	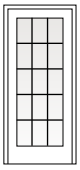	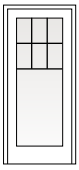	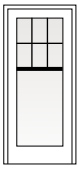	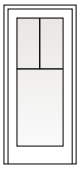	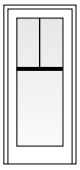	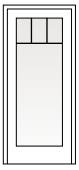	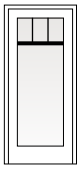

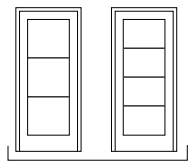
Specified Equal Light Examples

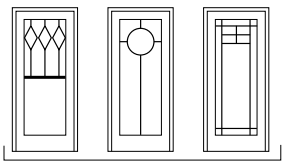
Custom Pattern Examples

Number of lights and overall pattern varies with panel size. Patterns may not be available in all configurations. Specified equal light and custom patterns are also available. For more grille options, see page 18 or visit **andersenwindows.com/grilles**.

Interior Extension Jambs

Use of interior extension jambs or drywall return will restrict panel operation on jamb-hinged patio doors. Jamb-hinged patio doors must be installed flush to the interior to achieve full panel operation.

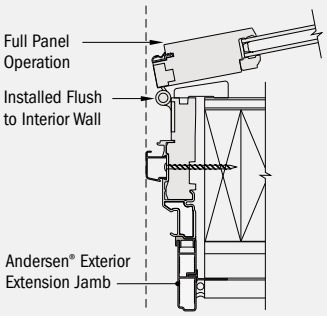

Jamb-Hinged Patio Door in 2 x 6 Wall Without Interior Extension Jambs

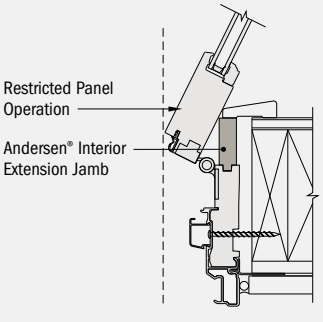

Jamb-Hinged Patio Door in 2 x 6 Wall With Interior Extension Jambs

Details for Frenchwood® Hinged Inswing Patio Doors

Scale 1 1/2" (38) = 1'-0" (305) – 1:8

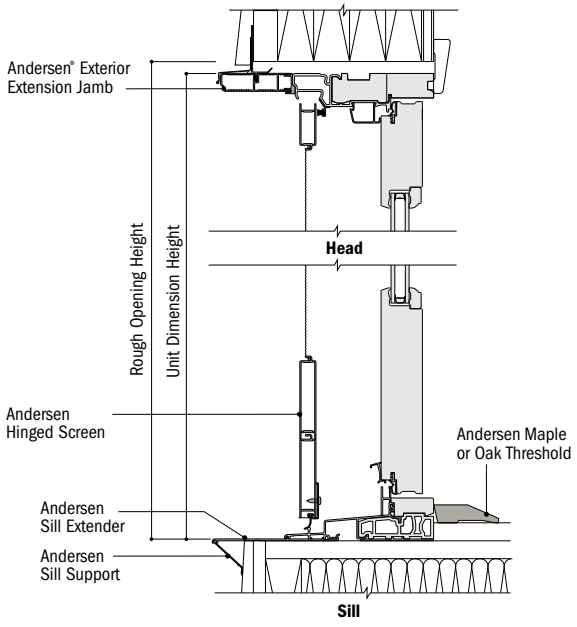

Vertical Section

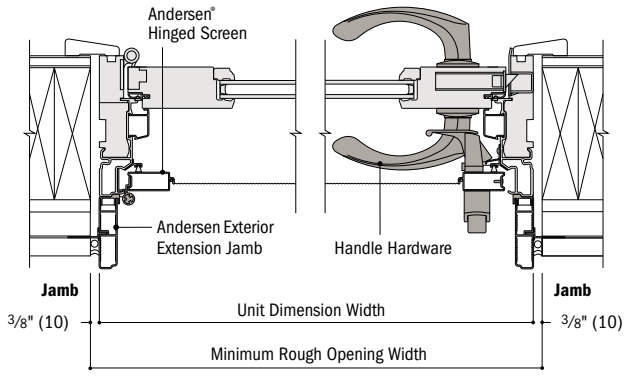

Horizontal Section
Active

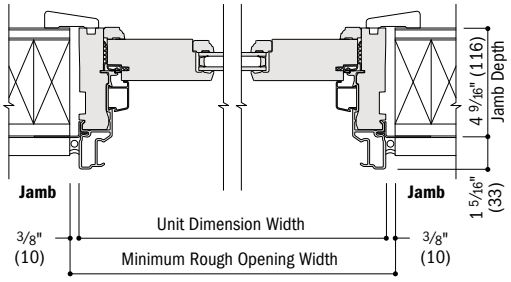

Horizontal Section
Stationary

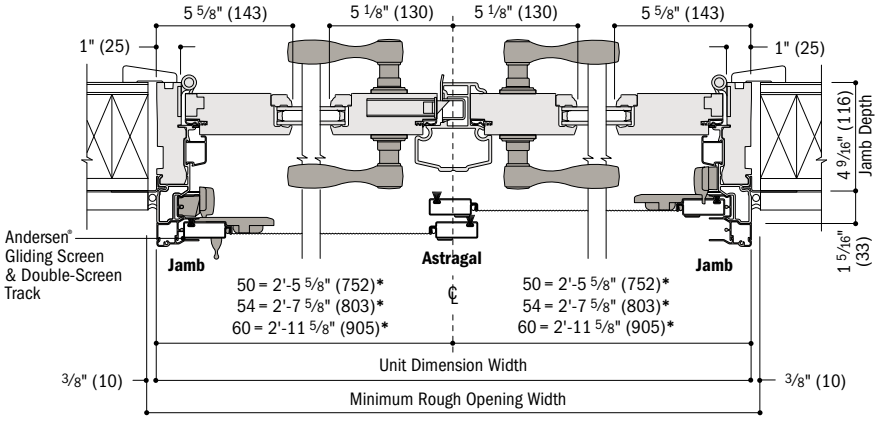

Horizontal Section
Two-Panel

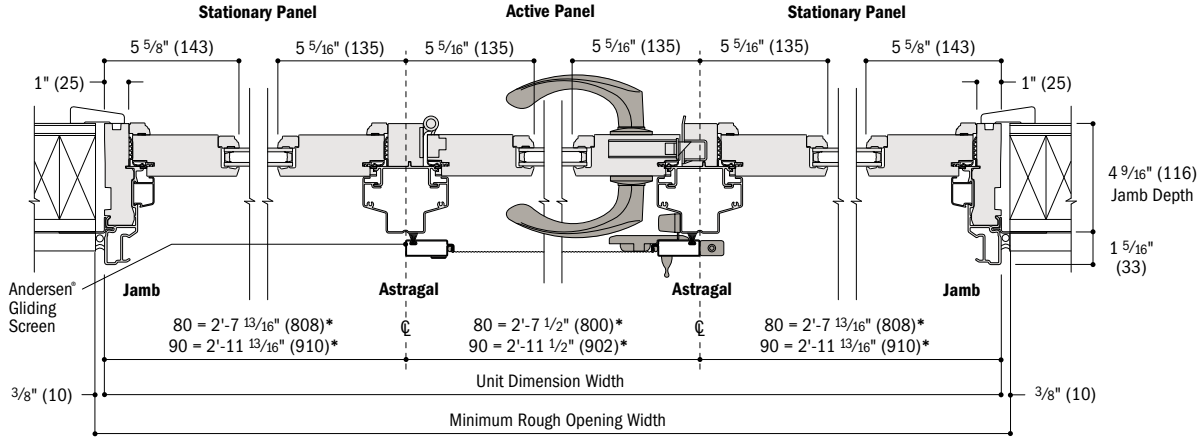

Horizontal Section
Three-Panel

- 4 9/16" (116) overall jamb depth measurement is from back side of installation flange.
- Light-colored areas are parts included with door. Dark-colored areas are additional Andersen® parts required to complete door assembly as shown.
- **Minimum rough openings may need to be increased to allow for use of building wraps, flashing, sill panning, brackets, fasteners or other items. See installation information on pages 222-223.**
- Details are for illustration only and are not intended to represent product installation methods or materials. Refer to product installation guides at andersenwindows.com.
- Dimensions in parentheses are in millimeters.
- *Dimension indicates location of astragal centerline.

Clear Opening Details

Scale 1 1/2" (38) = 1'-0" (305) – 1:8

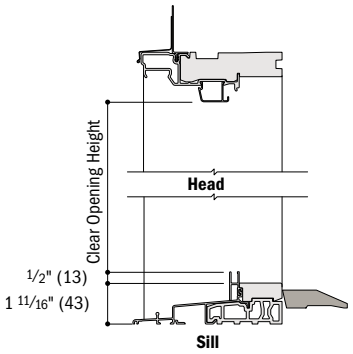

Vertical Section

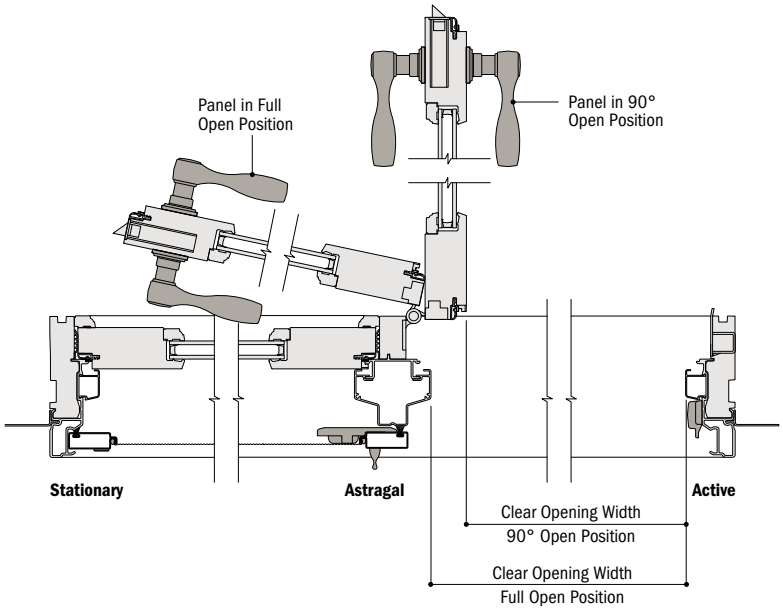

Horizontal Section
Two-Panel, Stationary-Active (open)

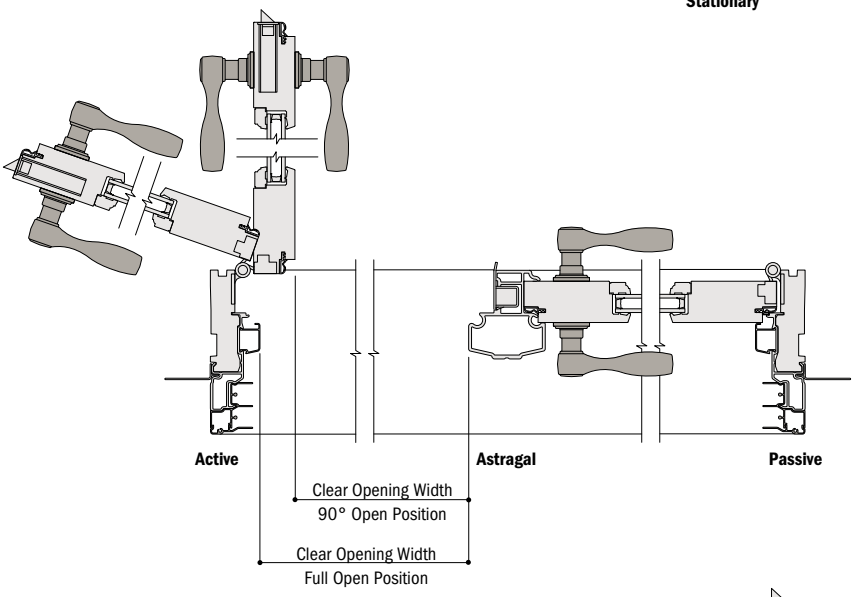

Horizontal Section
Two-Panel, Active (open) and Passive (closed)

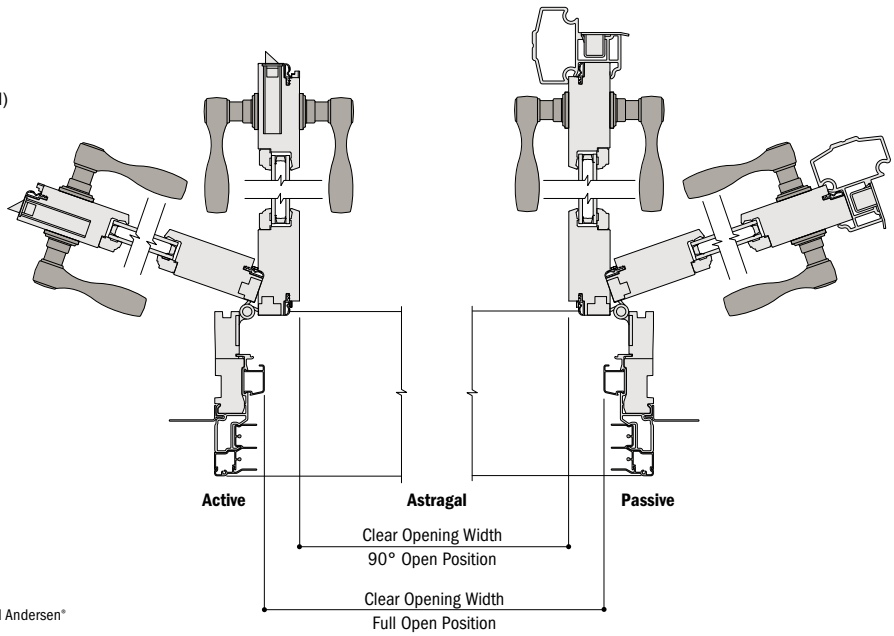

Horizontal Section
Two-Panel, Active (open) and Passive (open)

- Light-colored areas are parts included with door. Dark-colored areas are additional Andersen® parts required to complete door assembly as shown.
- **Minimum rough openings may need to be increased to allow for use of building wraps, flashing, sill panning, brackets, fasteners or other items. See installation information on pages 222-223.**
- Details are for illustration only and are not intended to represent product installation methods or materials. Refer to product installation guides at andersenwindows.com.
- Dimensions in parentheses are in millimeters.

Ramped Sill Detail
Scale 1 1/2" (38) = 1'-0" (305) – 1:8

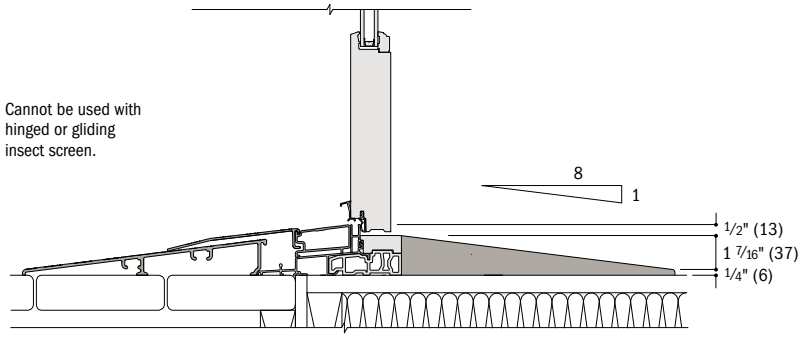

Vertical Section

Vertical Joining Detail – Fiberglass
Scale 1 1/2" (38) = 1'-0" (305) – 1:8

Overall Door Dimension Width

Sum of individual door widths plus 3/4" (19) for each join.

Overall Rough Opening Width

Overall door dimension width plus 3/4" (19).

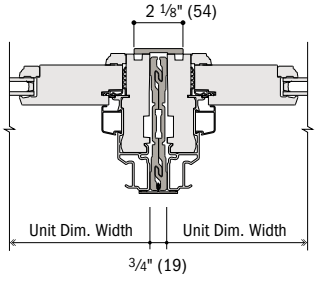

Horizontal Section
Frenchwood® Hinged Inswing to Frenchwood Hinged Inswing

Vertical Joining Detail – Aluminum
Scale 1 1/2" (38) = 1'-0" (305) – 1:8

Overall Door Dimension Width

Sum of individual door widths plus 3/16" (5) for each join.

Overall Rough Opening Width

Overall door dimension width plus 3/4" (19).

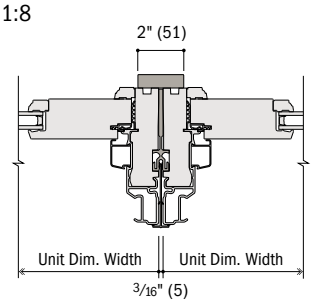

Horizontal Section
Frenchwood® Hinged Inswing to Frenchwood Hinged Inswing

Andersen does not recommend joining of hinge jamb to hinge jamb.

For more information on joining, refer to the Combination Designs section starting on page 183.

Separate Rough Openings Detail
Scale 1 1/2" (38) = 1'-0" (305) – 1:8

To meet structural requirements or to achieve a wider joined appearance, doors may be installed into separate rough openings having vertical support (by others) in combination with Andersen® exterior filler and exterior vinyl trim.

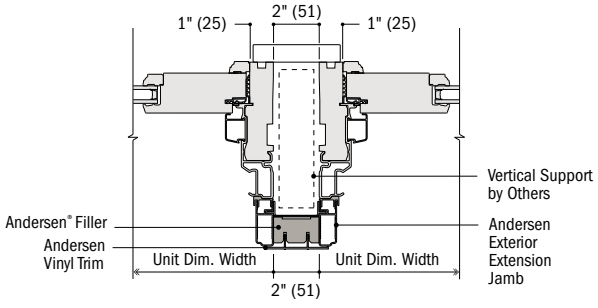

Horizontal Section
Frenchwood® Hinged Inswing and Frenchwood Hinged Inswing

- Light-colored areas are parts included with door. Dark-colored areas are additional Andersen® parts required to complete door assembly as shown.
- **Minimum rough openings may need to be increased to allow for use of building wraps, flashing, sill panning, brackets, fasteners or other items. See installation information on pages 222-223.**
- Details are for illustration only and are not intended to represent product installation methods or materials. Refer to product installation guides at andersenwindows.com.
- Structural performance of any combination is only as high as the lowest structural performance of any individual product or join in the combination.
- Andersen recommends installation of doors into separate rough openings. Consult with an architect or structural engineer regarding minimum requirements for structural support members between adjacent rough openings.
- Dimensions in parentheses are in millimeters.



FRENCHWOOD® PATIO DOOR SIDELIGHTS & TRANSOMS

Table of Sizes 163
Specifications 163
Custom Sizes 164
Sidelight & Transom Details 164
Combination Designs 183
Product Performance 199

CUSTOM SIZING
in ⅛" (3) increments

CUSTOM SIZES

Dimensions in parentheses are in millimeters.

FRENCHWOOD® PATIO DOOR SIDELIGHTS & TRANSOMS

FEATURES

FRAME

A All basic exterior frame members are fiberglass-reinforced composite that maintains an attractive appearance while minimizing maintenance.

B The exterior frame members are attached to a water-repellent preservative-treated wood subframe for long-lasting* protection and performance. The subframe is grooved to accept extension jambs.

SILL

C The sill of the Frenchwood patio door sidelight is made with three-piece construction. The subsill is made of Fibrex® material, and the sill step is solid oak. The exterior sill member is made of extruded aluminum with an attractive wear-resistant heat-baked finish in neutral gray. This combination of materials combines durability and low maintenance with excellent insulating characteristics.

PANEL

D The exterior of the wood panels are protected with a long-lasting* urethane base finish available in white, Sandtone, Terratone and forest green.

E Panel interior surfaces are unfinished pine veneer. Unfinished maple or oak veneers are available as options. Low-maintenance prefinished white interiors are also available.

GLASS

F Glass spacers are available in black, stainless steel and white.

G Panels are silicone bed glazed and finished with an interior wood stop.

H High-Performance dual-pane glass options include:

- Low-E4® tempered glass
- Low-E4 HeatLock® tempered glass
- Low-E4 SmartSun™ tempered glass
- Low-E4 SmartSun HeatLock tempered glass
- Low-E4 Sun tempered glass
- Low-E4 PassiveSun® HeatLock tempered glass

For even greater energy performance, 1" (25) triple-pane glass is available in these options:

- Low-E4 tempered glass
- Low-E4 Enhanced tempered glass
- Low-E4 Enhanced HeatLock tempered glass
- Low-E4 SmartSun tempered glass
- Low-E4 SmartSun Enhanced tempered glass
- Low-E4 SmartSun Enhanced HeatLock tempered glass

Additional glass options are available. Contact your Andersen supplier.



Sidelight

Transom

A removable translucent film helps shield the glass from damage during delivery and construction, and simplifies finishing at the job site.

Patterned Glass

Patterned glass options are available. See page 11 for more details.

COMBINATIONS

Elegantly frame our 400 Series Frenchwood patio doors with Frenchwood patio door sidelights, sidelight transoms and transoms.



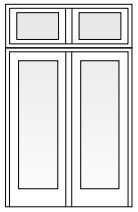

FWT-2-54110
FWH5468

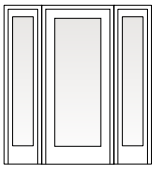

FWH3168
FWSL1768 **FWSL**1768

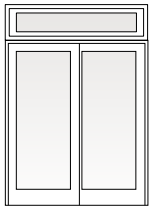

FWT6016
FWG60611

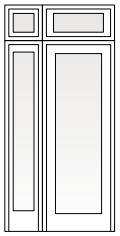

FWSLT1716 **FWT**3116
FWSL1780 **FWH**3180

Fiberglass joining material is available in 4 9/16" (116) and 6 9/16" (167) depths. See the Combination Designs section starting on page 183.

EXTERIORS & INTERIORS

EXTERIOR COLORS



White Sandtone



Terratone Forest Green

INTERIOR OPTIONS



Pine Maple

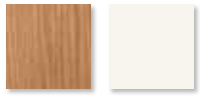

Oak White

ACCESSORIES Sold Separately

FRAME

Extension Jambs

The base jamb depth is 4 9/16" (116). Pine, maple and oak veneers, or prefinished white interior extension jambs are available in 1/16" (1.5) increments between 5 1/16" (129) and 7 1/8" (181).

ANDERSEN® ART GLASS

Andersen art glass panels come in a variety of original patterns. Available for stationary door panels, sidelights and transoms. For more information, see the Art Glass section starting on page 175 or visit andersenwindows.com/artglass.

GRILLES

Grilles are available in a variety of configurations and widths. See page 18 for details.

EXTERIOR TRIM

Available with Andersen exterior trim. See the Exterior Trim section starting on page 177.

CAUTION: Painting and staining may cause damage to rigid vinyl. Andersen does not warrant the adhesion or performance of homeowner-applied paint over vinyl or other factory-coated surfaces. For vinyl painting instructions and preparation, contact your Andersen supplier. Do not paint weatherstrip. Creosote-based stains should not come in contact with Andersen products. Abrasive cleaners or solutions containing corrosive solvents should not be used on Andersen products. See page 223 for a complete list of cautions.

*Visit andersenwindows.com/warranty for details.

Naturally occurring variations in grain, color and texture of wood make each window one of a kind. All wood interiors are unfinished unless a finish is specified.

Printing limitations prevent exact replication of colors and finishes. See your Andersen supplier for actual color and finish samples.

Dimensions in parentheses are in millimeters.

Table of Sizes for Frenchwood® Patio Door Sidelights, Sidelight Transoms and Transoms

Scale 1/8" (3) = 1'-0" (305) – 1:96

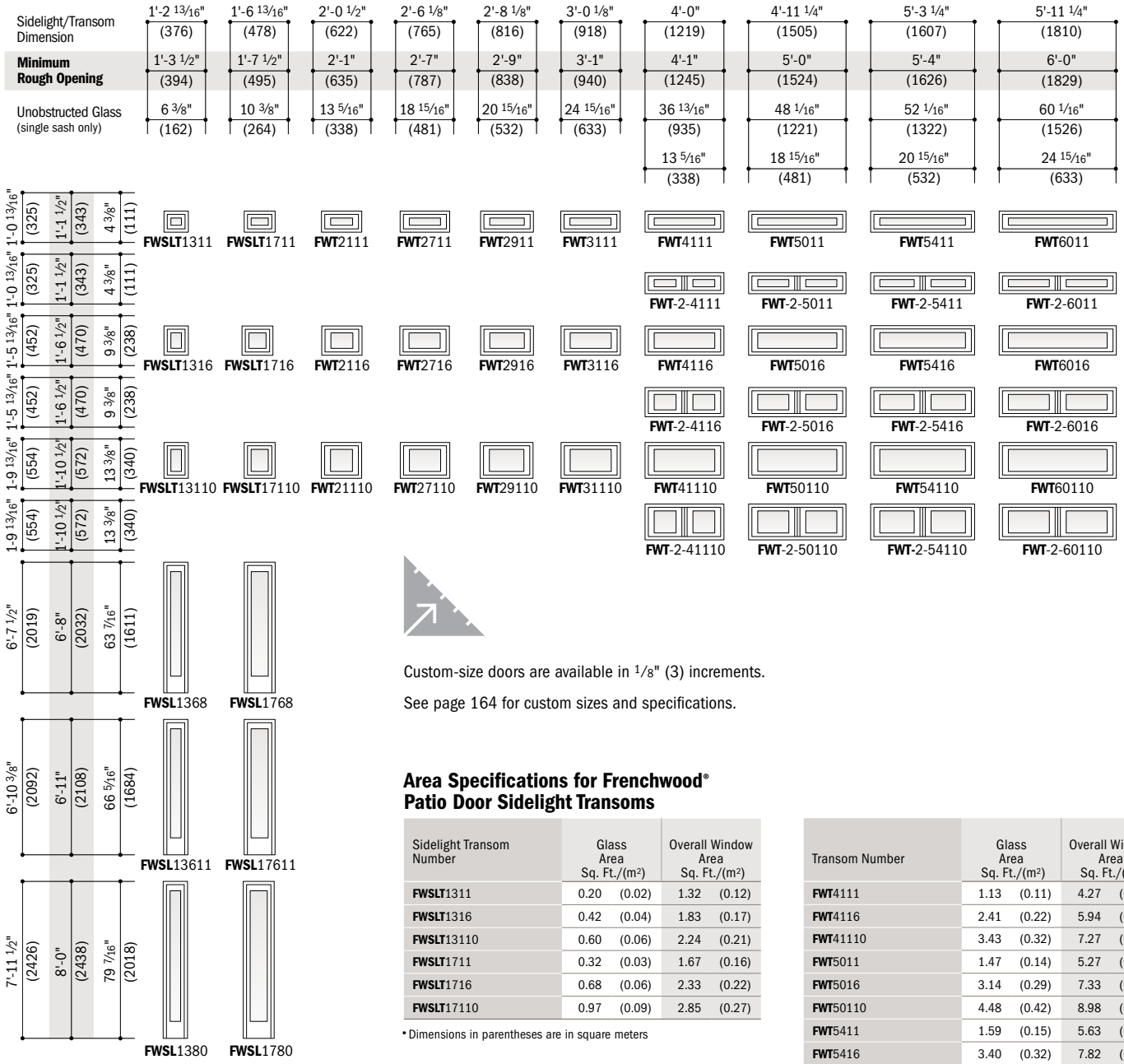

Custom-size doors are available in 1/8" (3) increments.

See page 164 for custom sizes and specifications.

- Sidelight/Transom Dimension always refers to outside frame-to-frame dimension.
- **Minimum Rough Opening dimensions may need to be increased to allow for use of building wraps, flashing, sill panning, brackets, fasteners or other items. See pages 222-223 for more details.**
- Dimensions in parentheses are in millimeters.

Area Specifications for Frenchwood® Patio Door Sidelights

Sidelight Number	Glass Area Sq. Ft./(m²)		Overall Window Area Sq. Ft./(m²)	
FWSL1368	2.82	(0.26)	8.18	(0.76)
FWSL1768	4.58	(0.43)	10.39	(0.97)
FWSL13611	2.95	(0.27)	8.47	(0.79)
FWSL17611	4.79	(0.45)	10.76	(1.00)
FWSL1380	3.53	(0.33)	9.82	(0.91)
FWSL1780	5.74	(0.53)	12.48	(0.16)

- Dimensions in parentheses are in square meters

Area Specifications for Frenchwood® Patio Door Sidelight Transoms

Sidelight Transom Number	Glass Area Sq. Ft./(m²)		Overall Window Area Sq. Ft./(m²)	
FWSLT1311	0.20	(0.02)	1.32	(0.12)
FWSLT1316	0.42	(0.04)	1.83	(0.17)
FWSLT13110	0.60	(0.06)	2.24	(0.21)
FWSLT1711	0.32	(0.03)	1.67	(0.16)
FWSLT1716	0.68	(0.06)	2.33	(0.22)
FWSLT17110	0.97	(0.09)	2.85	(0.27)

- Dimensions in parentheses are in square meters

Area Specifications for Frenchwood® Patio Door Transoms

Transom Number	Glass Area Sq. Ft./(m²)		Overall Window Area Sq. Ft./(m²)	
FWT2111	0.41	(0.04)	2.18	(0.20)
FWT2116	0.87	(0.08)	3.03	(0.28)
FWT21110	1.24	(0.12)	3.71	(0.35)
FWT2711	0.58	(0.05)	2.68	(0.25)
FWT2716	1.24	(0.12)	3.73	(0.35)
FWT27110	1.77	(0.16)	4.56	(0.42)
FWT2911	0.64	(0.06)	2.86	(0.27)
FWT2916	1.37	(0.13)	3.97	(0.37)
FWT29110	1.95	(0.18)	4.87	(0.45)
FWT3111	0.76	(0.07)	3.21	(0.30)
FWT3116	1.63	(0.15)	4.47	(0.42)
FWT31110	2.33	(0.22)	5.47	(0.51)

Transom Number	Glass Area Sq. Ft./(m²)		Overall Window Area Sq. Ft./(m²)	
FWT4111	1.13	(0.11)	4.27	(0.40)
FWT4116	2.41	(0.22)	5.94	(0.55)
FWT41110	3.43	(0.32)	7.27	(0.68)
FWT5011	1.47	(0.14)	5.27	(0.49)
FWT5016	3.14	(0.29)	7.33	(0.68)
FWT50110	4.48	(0.42)	8.98	(0.83)
FWT5411	1.59	(0.15)	5.63	(0.52)
FWT5416	3.40	(0.32)	7.82	(0.73)
FWT54110	4.85	(0.45)	9.58	(0.89)
FWT6011	1.84	(0.17)	6.34	(0.59)
FWT6016	3.93	(0.37)	8.81	(0.82)
FWT60110	5.60	(0.52)	10.79	(1.00)
FWT-2 4111	0.82	(0.08)	4.27	(0.40)
FWT-2 4116	1.74	(0.16)	5.94	(0.55)
FWT-2 41110	2.49	(0.23)	7.27	(0.68)
FWT-2 5011	1.16	(0.11)	5.27	(0.49)
FWT-2 5016	2.48	(0.23)	7.33	(0.68)
FWT-2 50110	3.53	(0.33)	8.98	(0.83)
FWT-2 5411	1.28	(0.12)	5.63	(0.52)
FWT-2 5416	2.74	(0.26)	7.82	(0.73)
FWT-2 54110	3.91	(0.36)	9.58	(0.89)
FWT-2 6011	1.53	(0.14)	6.34	(0.59)
FWT-2 6016	3.26	(0.30)	8.81	(0.82)
FWT-2 60110	4.65	(0.43)	10.79	(1.00)

- Dimensions in parentheses are in square meters

Custom Sizes and Specification Formulas

Available in 1/8" (3) increments between minimum and maximum widths and heights. Some restrictions apply. Measurement guide can be found at **andersenwindows.com/measure**.

Sidelight Transoms

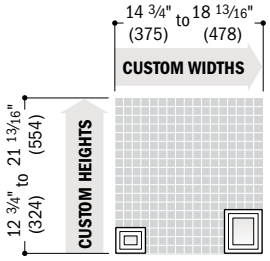

Transoms

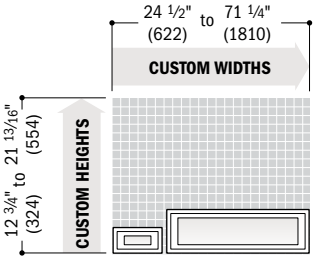

Sidelights

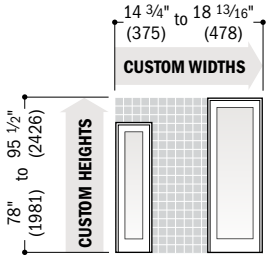

Twin Transoms

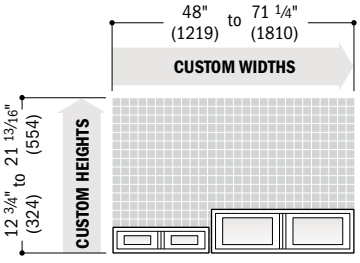

Minimum R.O. 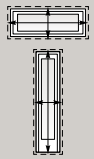	**Transoms, Twin Transoms and Sidelight Transoms** **Width** = width + 3/4" (19) **Height** = height + 3/4" (19) **Sidelights** **Width** = width + 3/4" (19) **Height** = height + 1/2" (13)
Unobst. Glass 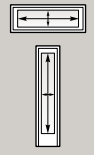	**Transoms** **Width** = window width − 11.15" (283) **Height** = window height − 8.4" (213) **Twin Transoms** **Width** = window width − 21.30" (541) **Height** = window height − 8.4" (213) **Sidelight Transoms** **Width** = window width − 8.4" (213) **Height** = window height − 8.4" (213) **Sidelights** **Width** = window width − 8.4" (213) **Height** = window height − 16.06" (408)

• **Minimum R.O.** (minimum rough opening) formulas provide minimum rough opening width and height dimensions. **Unobst. Glass** (unobstructed glass) formulas provide dimensions for determining area available for passage of light.

Frenchwood® Patio Door Sidelight and Transom Details

Scale 1 1/2" (38) = 1'-0" (305) – 1:8

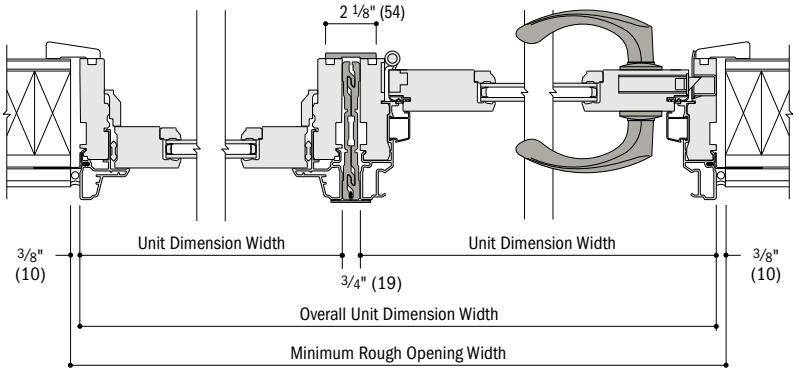

Horizontal Section

Frenchwood® Patio Door Sidelight to Frenchwood Hinged Inswing Patio Door

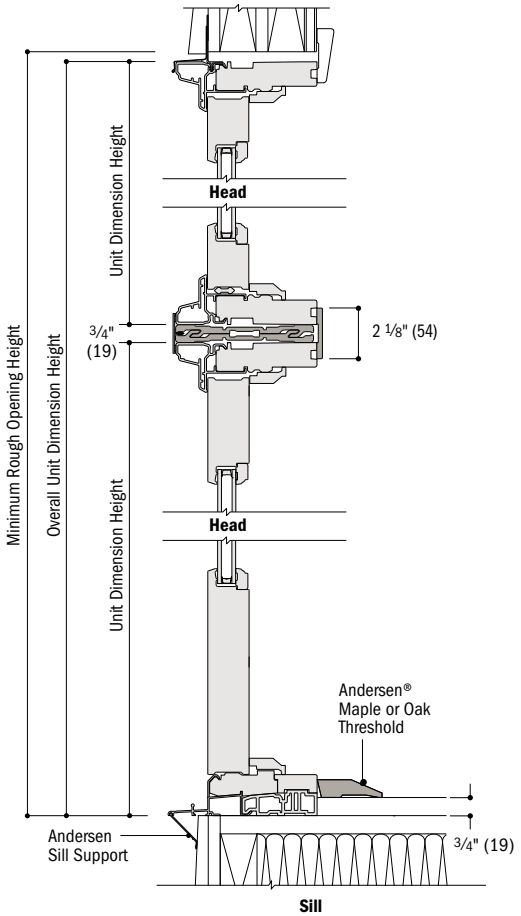

Vertical Section

Frenchwood® Patio Door Transom Over Frenchwood Patio Door Sidelight

For more information on joining, refer to the Combination Designs section starting on page 183.

• Light-colored areas are parts included with patio door sidelights/transoms or doors. Dark-colored areas are additional Andersen® parts required to complete patio door sidelights/transoms or door assembly as shown.
• **Minimum rough openings may need to be increased to allow for use of building wraps, flashing, sill panning, brackets, fasteners or other items. See installation information on pages 222-223.**
• Details are for illustration only and are not intended to represent product installation methods or materials. Refer to product installation guides at andersenwindows.com.
• Structural performance of any combination is only as high as the lowest structural performance of any individual product or join in the combination.
• Dimensions in parentheses are in millimeters.



COMPLEMENTARY CURVED TOP PATIO DOORS

Springline™ Hinged Inswing & Outswing Patio Doors

Dimensions & Specifications 167

Door Details 168-169

Arch Hinged Inswing & Outswing Patio Doors

Dimensions & Specifications 170-172

Sidelight Details 172

Joining Details 172

Door Details 173-174

Product Performance 199

CUSTOM SIZING
in ⅛" (3) increments

CUSTOM SIZES

Dimensions in parentheses are in millimeters.

COMPLEMENTARY CURVED TOP PATIO DOORS

FEATURES

FRAME

Ⓐ Heavy-duty extruded aluminum cladding protects the frame exterior, providing low-maintenance durability. The standard cladding finish meets AAMA 2604 specification. An optional finish that meets the AAMA 2605 specification is also available.

A vinyl installation flange extends 1 ½" (38) around three sides of the door frame to help properly position it in the opening. Installation clips are standard for increased structural anchoring to building members. Mounted around the frame perimeter, the clips rotate into position and can be bent into place against the framing members to suit all jamb conditions.

Ⓑ Wood frame members are treated with a water-repellent wood preservative for long-lasting* protection and performance. Radii are made of laminated continuous veneers. Lineal components are engineered wood with a pine core.

Ⓒ A one-piece compression weatherstrip at the frame sides and head protects against air and water infiltration. A flexible thermoplastic sweep is featured at the bottom of the panel on inswing doors. Outswing doors also feature a polypropylene rain skirt at the panel sides and top for added protection.

SILL

Ⓓ An extruded aluminum sill is thermally broken and available in a painted bronze or gray finish. The innovative sill design provides superior water management. Standard outswing sills have an oak cap. Maple or mahogany** is optional. Inswing sills have an interior wood trim strip to match the interior finish.

OPERATION

Inswing and outswing doors are available. Choose left-hinged, right-hinged or stationary as viewed from the exterior.

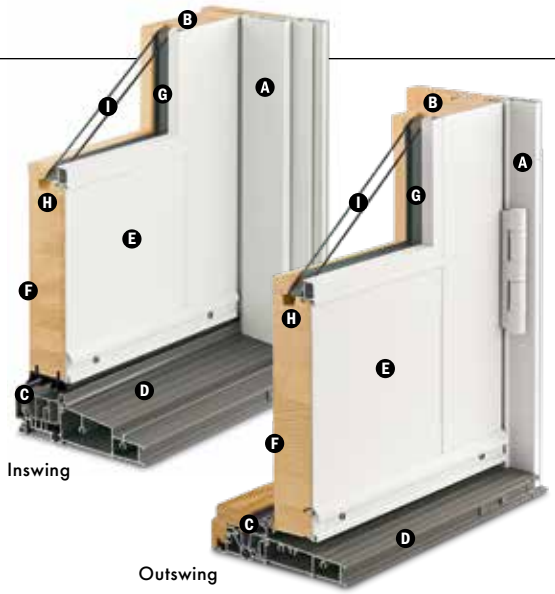

PANEL

Ⓔ Heavy-duty extruded aluminum cladding protects the panel exterior, providing low-maintenance durability.

Ⓕ Panel interior surfaces are unfinished wood veneers.

GLASS

Ⓖ Glass spacers are available in black, stainless steel and white.

Ⓗ Silicone glazing bead combined with two-sided silicone tape provide superior weathertightness.

Ⓘ High-Performance glass options include:

- Low-E4® tempered glass
- Low-E4 HeatLock® tempered glass
- Low-E4 SmartSun™ tempered glass
- Low-E4 SmartSun HeatLock tempered glass
- Low-E4 Sun tempered glass
- Low-E4 PassiveSun® HeatLock tempered glass

Additional glass options are available. Contact your Andersen supplier.

A removable translucent film helps shield the glass from damage during delivery and construction, and simplifies finishing at the job site.

HARDWARE

Multi-Point Locking System

The multi-point locking system, with a hook bolt above and below the center dead bolt, provides a weathertight seal and enhanced security.

Adjustable Hinges

Adjustable hinges are standard on inswing doors and have ball-bearing pivots for smooth, frictionless movement, and feature easy horizontal and vertical adjustments, plus release tabs for easy panel removal.

Ball-bearing hinges are standard on outswing doors and are available in finishes that coordinate with Andersen® hardware trim sets.

Hardware

Mix-and-match style and finish options are available to get just the right look inside and out.

In addition to Andersen hardware, Andersen also offers Ashley Norton,® Baldwin® and FSB® designer hardware, which is available in an extensive variety of styles and finishes for hinged doors; see pages 14-17. Hardware is sold separately.

EXTERIORS & INTERIORS

EXTERIOR & INTERIOR COLORS

White, Canvas, Prairie Grass, Sandtone, Terratone, Cocoa Bean

Dark Bronze, Red Rock, Forest Green, Dove Gray, Black

INTERIOR WOOD SPECIES

Pine, Maple, Oak

Additional standard interior colors include birch bark, anodized silver and primed for paint. Painted colors are on poplar, except anodized silver; anodized silver is on maple only. For custom exterior and interior colors, contact your Andersen supplier. Additional standard wood species include vertical-grain Douglas fir, mahogany,** alder, mixed-grain Douglas fir, hickory, cherry, white oak and walnut. All wood interiors are unfinished unless a paint color is specified.

ACCESSORIES Sold Separately

FRAME

Extension Jambs

Inswing and outswing base jamb depth is 4 9/16" (116). Inswing is also available in a 6 9/16" (167) base jamb depth. Available in all wood species and prefinished colors. Extension jambs are available in 1/16" (1.5) increments between 4 9/16" (116) and 7 1/8" (181). Additional dimensions are available. Contact your Andersen supplier for more information.

Extension jambs will restrict the full opening of inswing doors.

CASING



Curved interior casings are available in the same profiles as other Andersen products. Curved exterior aluminum and wood casings are available in matching radii and a variety of profiles.

HARDWARE

Exterior Keyed Lock



A six-pin key cylinder lock allows the door to be locked and unlocked from the exterior. Available in styles and finishes that coordinate with Andersen door hardware.

GRILLES & ART GLASS

Grilles are available in a variety of configurations and widths. Decorative insulated art glass designs are also available.

*Visit andersenwindows.com/warranty for details.

**Actual wood species is either Sapele or Sipo, both non-endangered species grown in Africa, with color and characteristics similar to Central American mahoganies.

All trademarks where denoted are marks of their respective owners.

Andersen patio doors are not intended for use as entry doors.

Naturally occurring variations in grain, color and texture of wood make each window one of a kind. All wood interiors are unfinished unless a finish is specified.

Printing limitations prevent exact replication of colors and finishes. See your Andersen supplier for actual color and finish samples.

Dimensions in parentheses are in millimeters.

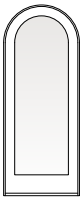

1 **AHISD**xx80

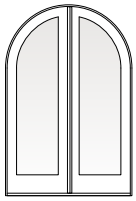

1 **AHISD**xx80**AP/PA**

Custom-size patio doors are available in 1/8" (3) increments.

Traditional panels are standard. Custom-design and 3/4-light panels are available. Stationary doors are also available (i.e., 3180**S** or 4080**SS**). Add **AHISD** to the Door Number listed in the table (i.e., **AHISD**3180).

Dimensions and Specifications for Complementary Springline™ Hinged Inswing Patio Doors

Door Number	Number of Panels Open*	Door Dimensions				Min. Rough Opening		Clear Opening Area Sq. Ft./(m²)	Clear Opening Maximums			Glass Area Sq. Ft./(m²)	Vent Area Sq. Ft./(m²)	Overall Door Area Sq. Ft./(m²)
		Radius Inches/(mm)	Side Height Inches/(mm)	Width Inches/(mm)	Height Inches/(mm)	Width Inches/(mm)	Height Inches/(mm)		90° Open Position Width Inches/(mm)	Full Open Position Width Inches/(mm)	Height Inches/(mm)			
3180	1	18" (457)	77 1/2" (1969)	35 15/16" (913)	95 1/2" (2426)	37" (940)	96" (2438)	17.26 (1.60)	30 7/8" (784)	32 13/16" (833)	75 3/4" (1924)	13.28 (1.23)	20.27 (1.88)	22.88 (2.13)
3380	1	19" (483)	76 1/2" (1943)	37 15/16" (964)	95 1/2" (2426)	39" (991)	96" (2438)	18.07 (1.68)	32 7/8" (835)	34 13/16" (884)	74 3/4" (1899)	14.31 (1.33)	21.45 (1.99)	24.09 (2.24)
4080	2	23 5/8" (600)	71 7/8" (1826)	47 1/4" (1200)	95 1/2" (2426)	48" (1219)	96" (2438)	21.34 (1.98)	39 15/16" (1014)	43 13/16" (1113)	70 1/8" (1781)	13.27 (1.23)	26.72 (2.48)	29.67 (2.76)
4080	1	23 5/8" (600)	71 7/8" (1826)	47 1/4" (1200)	95 1/2" (2426)	48" (1219)	96" (2438)	10.17 (0.94)	18 15/16" (481)	20 7/8" (530)	70 1/8" (1781)	13.27 (1.23)	11.72 (1.09)	29.67 (2.76)
5080	2	29 5/8" (752)	65 7/8" (1673)	59 1/4" (1505)	95 1/2" (2426)	60" (1524)	96" (2438)	24.85 (2.31)	51 15/16" (1319)	55 13/16" (1418)	64 1/8" (1629)	19.14 (1.78)	33.54 (3.12)	36.68 (3.41)
5080	1	29 5/8" (752)	65 7/8" (1673)	59 1/4" (1505)	95 1/2" (2426)	60" (1524)	96" (2438)	11.97 (1.11)	24 15/16" (633)	26 7/8" (683)	64 1/8" (1629)	19.14 (1.78)	14.53 (1.35)	36.68 (3.41)
5480	2	31 5/8" (803)	63 7/8" (1622)	63 1/4" (1607)	95 1/2" (2426)	64" (1626)	96" (2438)	25.80 (2.40)	55 15/16" (1421)	59 13/16" (1519)	62 1/8" (1578)	21.05 (1.96)	35.77 (3.32)	38.97 (3.62)
5480	1	31 5/8" (803)	63 7/8" (1622)	63 1/4" (1607)	95 1/2" (2426)	64" (1626)	96" (2438)	12.46 (1.16)	26 15/16" (684)	28 7/8" (733)	62 1/8" (1578)	21.05 (1.96)	15.45 (1.44)	38.97 (3.62)
6080	2	35 5/8" (905)	59 7/8" (1521)	71 1/4" (1810)	95 1/2" (2426)	72" (1829)	96" (2438)	27.37 (2.54)	63 15/16" (1624)	67 13/16" (1722)	58 1/8" (1476)	24.79 (2.30)	40.15 (3.73)	43.47 (4.04)
6080	1	35 5/8" (905)	59 7/8" (1521)	71 1/4" (1810)	95 1/2" (2426)	72" (1829)	96" (2438)	13.27 (1.23)	30 15/16" (786)	32 7/8" (835)	58 1/8" (1476)	24.79 (2.30)	17.24 (1.60)	43.47 (4.04)
6480	2	37 5/8" (956)	57 7/8" (1470)	75 1/4" (1911)	95 1/2" (2426)	76" (1930)	96" (2438)	27.99 (2.60)	67 15/16" (1726)	71 13/16" (1824)	56 1/8" (1426)	26.63 (2.47)	42.30 (3.93)	45.69 (4.24)
6480	1	37 5/8" (956)	57 7/8" (1470)	75 1/4" (1911)	95 1/2" (2426)	76" (1930)	96" (2438)	13.59 (1.26)	32 15/16" (837)	34 7/8" (886)	56 1/8" (1426)	26.63 (2.47)	19.84 (1.84)	45.69 (4.24)

• Door Dimension always refers to outside frame-to-frame dimension.
• **Minimum Rough Opening dimensions may need to be increased to allow for use of building wraps, flashing, sill panning, brackets, fasteners or other items. See pages 222-223 for more details.**
• Dimensions in parentheses are in millimeters or square meters.
*For two-panel patio doors with one panel open, clear opening is based on active panel open and passive panel closed.

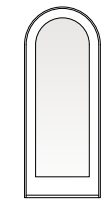

1 **AOSD**xx80

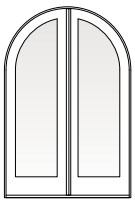

1 **AOSD**xx80**AP/PA**

Custom-size patio doors are available in 1/8" (3) increments.

Traditional panels are standard. Custom-design and 3/4-light panels are available. Stationary doors are also available (i.e., 3180**S** or 4080**SS**). Add **AOSD** to the Door Number listed in the table (i.e., **AOSD**3180).

Dimensions and Specifications for Complementary Springline™ Hinged Outswing Patio Doors

Door Number	Number of Panels Open*	Door Dimensions				Min. Rough Opening		Clear Opening Area Sq. Ft./(m²)	Clear Opening Maximums			Glass Area Sq. Ft./(m²)	Vent Area Sq. Ft./(m²)	Overall Door Area Sq. Ft./(m²)
		Radius Inches/(mm)	Side Height Inches/(mm)	Width Inches/(mm)	Height Inches/(mm)	Width Inches/(mm)	Height Inches/(mm)		90° Open Position Width Inches/(mm)	Full Open Position Width Inches/(mm)	Height Inches/(mm)			
3180	1	18" (457)	77 1/2" (1969)	35 15/16" (913)	95 1/2" (2426)	37" (940)	96" (2438)	17.52 (1.63)	31 3/8" (797)	33 5/16" (846)	75 3/4" (1924)	13.28 (1.23)	20.53 (1.91)	22.88 (2.13)
3380	1	19" (483)	76 1/2" (1943)	37 15/16" (964)	95 1/2" (2426)	39" (991)	96" (2438)	18.33 (1.70)	33 3/8" (848)	35 5/16" (897)	74 3/4" (1899)	14.31 (1.33)	21.71 (2.02)	24.09 (2.24)
4080	2	23 5/8" (600)	71 7/8" (1826)	47 1/4" (1200)	95 1/2" (2426)	48" (1219)	96" (2438)	21.73 (2.02)	40 11/16" (1033)	44 5/8" (1133)	70 1/8" (1781)	13.27 (1.23)	27.12 (2.52)	29.67 (2.76)
4080	1	23 5/8" (600)	71 7/8" (1826)	47 1/4" (1200)	95 1/2" (2426)	48" (1219)	96" (2438)	10.35 (0.96)	19 1/4" (489)	21 1/4" (540)	70 1/8" (1781)	13.27 (1.23)	11.72 (1.09)	29.67 (2.76)
5080	2	29 5/8" (752)	65 7/8" (1673)	59 1/4" (1505)	95 1/2" (2426)	60" (1524)	96" (2438)	25.22 (2.34)	52 11/16" (1338)	56 5/8" (1438)	64 1/8" (1629)	19.14 (1.78)	33.90 (3.15)	36.68 (3.41)
5080	1	29 5/8" (752)	65 7/8" (1673)	59 1/4" (1505)	95 1/2" (2426)	60" (1524)	96" (2438)	12.13 (1.13)	25 1/4" (641)	27 1/4" (692)	64 1/8" (1629)	19.14 (1.78)	14.53 (1.35)	36.68 (3.41)
5480	2	31 5/8" (803)	63 7/8" (1622)	63 1/4" (1607)	95 1/2" (2426)	64" (1626)	96" (2438)	26.16 (2.43)	56 11/16" (1440)	60 5/8" (1540)	62 1/8" (1578)	21.05 (1.96)	36.12 (3.36)	38.97 (3.62)
5480	1	31 5/8" (803)	63 7/8" (1622)	63 1/4" (1607)	95 1/2" (2426)	64" (1626)	96" (2438)	12.62 (1.17)	27 1/4" (692)	29 1/4" (743)	62 1/8" (1578)	21.05 (1.96)	15.45 (1.44)	38.97 (3.62)
6080	2	35 5/8" (905)	59 7/8" (1521)	71 1/4" (1810)	95 1/2" (2426)	72" (1829)	96" (2438)	27.70 (2.57)	64 11/16" (1643)	68 5/8" (1743)	58 1/8" (1476)	24.79 (2.30)	40.48 (3.76)	43.47 (4.04)
6080	1	35 5/8" (905)	59 7/8" (1521)	71 1/4" (1810)	95 1/2" (2426)	72" (1829)	96" (2438)	13.42 (1.25)	31 1/4" (794)	33 1/4" (845)	58 1/8" (1476)	24.79 (2.30)	17.24 (1.60)	43.47 (4.04)
6480	2	37 5/8" (956)	57 7/8" (1470)	75 1/4" (1911)	95 1/2" (2426)	76" (1930)	96" (2438)	28.31 (2.63)	68 11/16" (1745)	72 5/8" (1845)	56 1/8" (1426)	26.63 (2.47)	42.62 (3.96)	45.69 (4.24)
6480	1	37 5/8" (956)	57 7/8" (1470)	75 1/4" (1911)	95 1/2" (2426)	76" (1930)	96" (2438)	13.74 (1.28)	33 1/4" (845)	35 1/4" (895)	56 1/8" (1426)	26.63 (2.47)	19.84 (1.84)	45.69 (4.24)

• Door Dimension always refers to outside frame-to-frame dimension.
• **Minimum Rough Opening dimensions may need to be increased to allow for use of building wraps, flashing, sill panning, brackets, fasteners or other items. See pages 222-223 for more details.**
• Dimensions in parentheses are in millimeters or square meters.
*For two-panel patio doors with one panel open, clear opening is based on active panel open and passive panel closed.

COMPLEMENTARY CURVED TOP PATIO DOORS

Details for Complementary Springline™ Hinged Inswing Patio Doors – 4 9/16" (116) Jamb Depth

Scale 1 1/2" (38) = 1'-0" (305) – 1:8

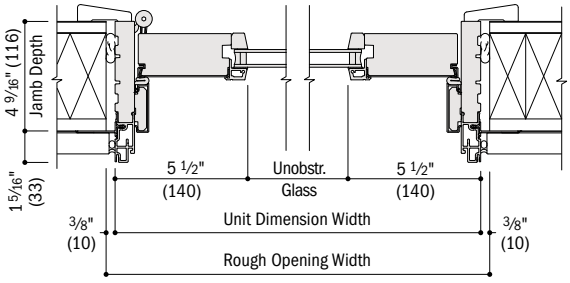

Horizontal Section

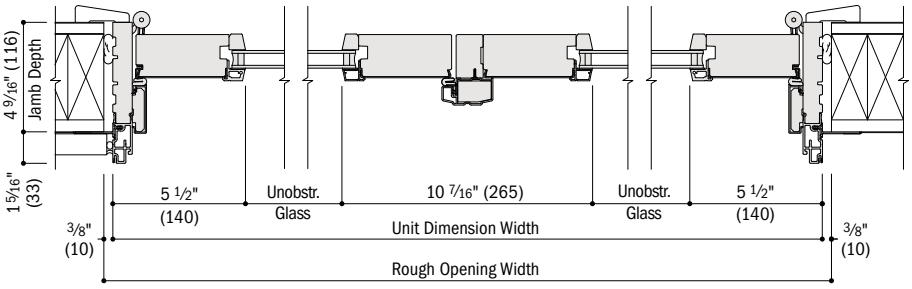

Horizontal Section

Two-Panel

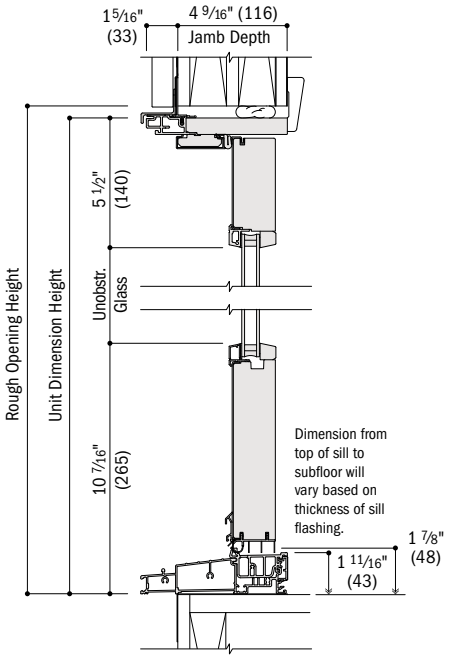

Vertical Section

Details for Complementary Springline™ Hinged Inswing Patio Doors – 6 9/16" (167) Jamb Depth

Scale 1 1/2" (38) = 1'-0" (305) – 1:8

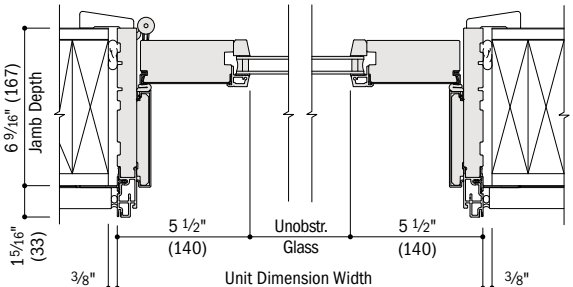

Horizontal Section

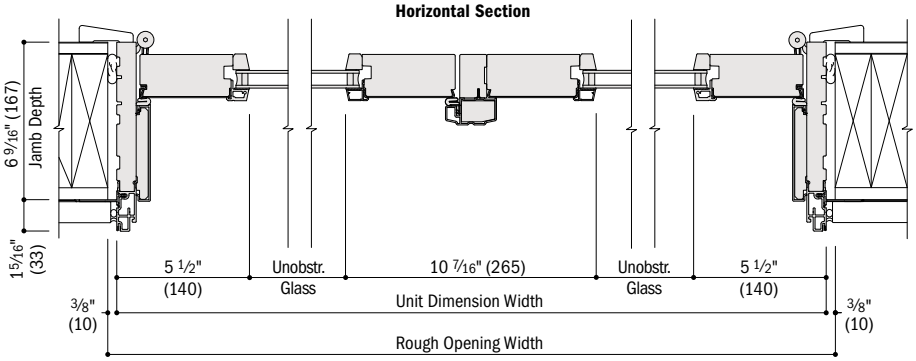

Horizontal Section

Two-Panel

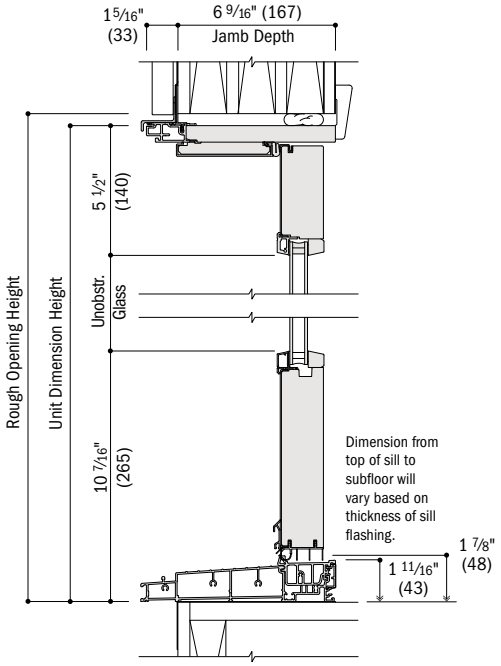

Vertical Section

- 4 9/16" (116) and 6 9/16" (167) overall jamb depth measurements are from back side of installation flange.
- Light-colored areas are parts included with door. Dark-colored areas are additional Andersen® parts required to complete door assembly as shown.
- **Minimum rough openings may need to be increased to allow for use of building wraps, flashing, sill panning, brackets, fasteners or other items. See installation information on pages 222-223.**
- Details are for illustration only and are not intended to represent product installation methods or materials. Refer to product installation guides at andersenwindows.com.
- Dimensions in parentheses are in millimeters.

Details for Complementary Springline™ Hinged Outswing Patio Doors – 4 9/16" (116) Jamb Depth

Scale 1 1/2" (38) = 1'-0" (305) – 1:8

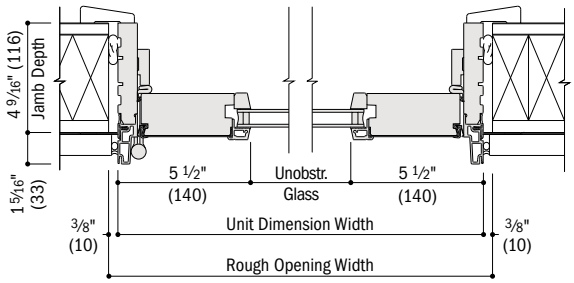

Horizontal Section

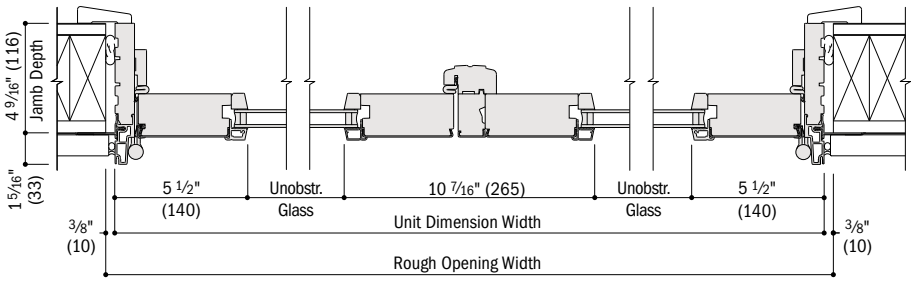

Horizontal Section
Two-Panel

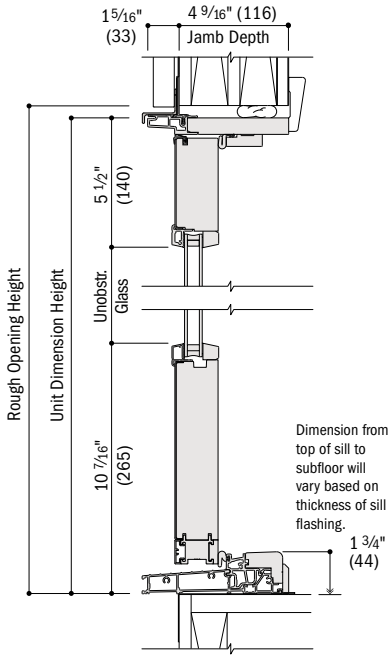

Vertical Section

- 4 9/16" (116) overall jamb depth measurements are from back side of installation flange.
- Light-colored areas are parts included with door. Dark-colored areas are additional Andersen® parts required to complete door assembly as shown.
- **Minimum rough openings may need to be increased to allow for use of building wraps, flashing, sill panning, brackets, fasteners or other items. See installation information on pages 222-223.**
- Details are for illustration only and are not intended to represent product installation methods or materials. Refer to product installation guides at andersenwindows.com.
- Dimensions in parentheses are in millimeters.

COMPLEMENTARY CURVED TOP PATIO DOORS

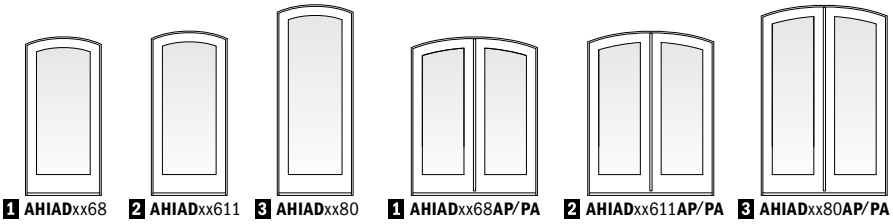

1 AHIADxx68 **2 AHIAD**xx611 **3 AHIAD**xx80 **1 AHIAD**xx68**AP/PA** **2 AHIAD**xx611**AP/PA** **3 AHIAD**xx80**AP/PA**

Custom-size patio doors are available in 1/8" (3) increments. Traditional panels are standard. Custom-design and 3/4-light panels are available. Stationary doors are also available (i.e., 2168**S** or 4068**SS**). Add **AHIAD** to the Door Number listed in the table (i.e., **AHIAD**2168).

Dimensions and Specifications for Complementary Arch Hinged Inswing Patio Doors

Door Number	Number of Panels Open*	Door Dimensions				Min. Rough Opening		Clear Opening Area Sq. Ft./(m²)	Clear Opening Maximums			Glass Area Sq. Ft./(m²)	Vent Area Sq. Ft./(m²)	Overall Door Area Sq. Ft./(m²)
		Radius Inches/(mm)	Side Height Inches/(mm)	Width Inches/(mm)	Height Inches/(mm)	Width Inches/(mm)	Height Inches/(mm)		90° Open Position Width Inches/(mm)	Full Open Position Width Inches/(mm)	Height Inches/(mm)			
2168	1	36" (914)	77 7/16" (1967)	23 15/16" (608)	79 1/2" (2019)	25" (635)	80" (2032)	10.79 (1.00)	18 7/8" (479)	20 13/16" (529)	74 11/16" (1897)	5.66 (0.53)	12.46 (1.16)	14.49 (1.35)
2768	1	48" (1219)	77 1/8" (1959)	29 15/16" (760)	79 1/2" (2019)	31" (787)	80" (2032)	13.84 (1.29)	24 7/8" (632)	26 13/16" (681)	74 5/16" (1888)	8.28 (0.77)	15.70 (1.46)	17.85 (1.66)
2968	1	48" (1219)	76 3/4" (1949)	31 15/16" (811)	79 1/2" (2019)	33" (838)	80" (2032)	14.81 (1.38)	26 7/8" (683)	28 13/16" (732)	74" (1880)	9.15 (0.85)	16.77 (1.56)	18.95 (1.76)
3168	1	48" (1219)	76" (1930)	35 15/16" (913)	79 1/2" (2019)	37" (940)	80" (2032)	16.71 (1.55)	30 7/8" (784)	32 13/16" (833)	73 5/16" (1862)	10.87 (1.01)	18.88 (1.75)	21.13 (1.96)
3368	1	48" (1219)	75 5/8" (1921)	37 15/16" (964)	79 1/2" (2019)	39" (991)	80" (2032)	17.86 (1.66)	32 7/8" (835)	34 13/16" (884)	73 7/8" (1876)	11.72 (1.09)	22.01 (2.04)	24.36 (2.26)
21611	1	36" (914)	80 5/16" (2040)	23 15/16" (608)	82 3/8" (2092)	25" (635)	83" (2108)	11.21 (1.04)	18 7/8" (479)	20 13/16" (529)	77 9/16" (1970)	5.93 (0.55)	14.39 (1.34)	16.65 (1.55)
27611	1	48" (1219)	80" (2032)	29 15/16" (760)	82 3/8" (2092)	31" (787)	83" (2108);	14.37 (1.33)	24 7/8" (632)	26 13/16" (681)	77 3/16" (1961)	8.68 (0.81)	18.17 (1.69)	20.55 (1.91)
29611	1	48" (1219)	79 5/8" (2022)	31 15/16" (811)	82 3/8" (2092)	33" (838)	83" (2108)	15.38 (1.43)	26 7/8" (683)	28 13/16" (732)	76 7/8" (1953)	9.58 (0.89)	19.41 (1.80)	21.83 (2.03)
31611	1	48" (1219)	78 7/8" (2003)	35 15/16" (913)	82 3/8" (2092)	37" (940)	83" (2108)	17.36 (1.61)	30 7/8" (784)	32 13/16" (833)	76 3/16" (1935)	11.39 (1.06)	21.89 (2.03)	24.37 (2.26)
33611	1	48" (1219)	78 1/2" (1994)	37 15/16" (964)	82 3/8" (2092)	39" (991)	83" (2108)	18.55 (1.72)	32 7/8" (835)	34 13/16" (884)	76 3/4" (1949)	12.28 (1.14)	25.19 (2.34)	27.78 (2.58)
2180	1	36" (914)	93 7/16" (2373)	23 15/16" (608)	95 1/2" (2426)	25" (635)	96" (2438)	13.11 (1.22)	18 7/8" (479)	20 13/16" (529)	90 11/16" (2303)	7.09 (0.66)	16.31 (1.52)	18.81 (1.75)
2780	1	48" (1219)	93 1/8" (2365)	29 15/16" (760)	95 1/2" (2426)	31" (787)	96" (2438)	16.82 (1.56)	24 7/8" (632)	26 13/16" (681)	90 5/16" (2294)	10.38 (0.96)	20.63 (1.92)	23.25 (2.16)
2980	1	48" (1219)	92 3/4" (2356)	31 15/16" (811)	95 1/2" (2426)	33" (838)	96" (2438)	18.01 (1.67)	26 7/8" (683)	28 13/16" (732)	90" (2286)	11.47 (1.07)	22.06 (2.05)	24.71 (2.30)
3180	1	48" (1219)	92" (2337)	35 15/16" (913)	95 1/2" (2426)	37" (940)	96" (2438)	20.35 (1.89)	30 7/8" (784)	32 13/16" (833)	89 5/16" (2269)	13.63 (1.27)	24.89 (2.31)	27.62 (2.57)
3380	1	48" (1219)	91 5/8" (2327)	37 15/16" (964)	95 1/2" (2426)	39" (991)	96" (2438)	21.73 (2.02)	32 7/8" (835)	34 13/16" (884)	89 7/8" (2283)	14.71 (1.37)	28.38 (2.64)	31.20 (2.90)
4068	2	48" (1219)	73 5/16" (1862)	47 1/4" (1200)	79 1/2" (2019)	48" (1219)	80" (2032)	21.56 (2.00)	39 15/16" (1014)	43 13/16" (1113)	70 7/8" (1800)	10.93 (1.02)	25.61 (2.38)	28.07 (2.61)
4068	1	48" (1219)	73 5/16" (1862)	47 1/4" (1200)	79 1/2" (2019)	48" (1219)	80" (2032)	10.27 (0.95)	18 15/16" (481)	20 7/8" (530)	70 7/8" (1800)	10.93 (1.02)	12.22 (1.14)	28.07 (2.61)
5068	2	96" (2438)	74 13/16" (1900)	59 1/4" (1505)	79 1/2" (2019)	60" (1524)	80" (2032)	27.95 (2.60)	51 15/16" (1319)	55 13/16" (1418)	72 1/8" (1832)	16.30 (1.51)	32.24 (3.00)	34.97 (3.25)
5068	1	96" (2438)	74 13/16" (1900)	59 1/4" (1505)	79 1/2" (2019)	60" (1524)	80" (2032)	13.46 (1.25)	24 15/16" (633)	26 7/8" (683)	72 1/8" (1832)	16.30 (1.51)	15.54 (1.44)	34.97 (3.25)
5468	2	96" (2438)	74 1/8" (1883)	63 1/4" (1607)	79 1/2" (2019)	64" (1626)	80" (2032)	29.70 (2.76)	55 15/16" (1421)	59 13/16" (1519)	71 1/2" (1816)	17.97 (1.67)	34.29 (3.19)	37.09 (3.45)
5468	1	96" (2438)	74 1/8" (1883)	63 1/4" (1607)	79 1/2" (2019)	64" (1626)	80" (2032)	14.34 (1.33)	26 15/16" (684)	28 7/8" (733)	71 1/2" (1816)	17.97 (1.67)	16.56 (1.54)	37.09 (3.45)
6068	2	96" (2438)	72 5/8" (1845)	71 1/4" (1810)	79 1/2" (2019)	72" (1829)	80" (2032)	32.99 (3.06)	63 15/16" (1624)	67 13/16" (1722)	70 1/16" (1780)	21.25 (1.97)	38.33 (3.56)	41.27 (3.83)
6068	1	96" (2438)	72 5/8" (1845)	71 1/4" (1810)	79 1/2" (2019)	72" (1829)	80" (2032)	16.00 (1.49)	30 15/16" (786)	32 7/8" (835)	70 1/16" (1780)	21.25 (1.97)	18.58 (1.73)	41.27 (3.83)
6468	2	96" (2438)	71 13/16" (1824)	75 1/4" (1911)	79 1/2" (2019)	76" (1930)	80" (2032)	34.53 (3.21)	67 15/16" (1726)	71 13/16" (1824)	69 1/4" (1759)	22.86 (2.12)	44.22 (4.11)	47.36 (4.40)
6468	1	96" (2438)	71 13/16" (1824)	75 1/4" (1911)	79 1/2" (2019)	76" (1930)	80" (2032)	16.77 (1.56)	32 15/16" (837)	34 7/8" (886)	69 1/4" (1759)	22.86 (2.12)	21.53 (2.00)	47.36 (4.40)
40611	2	48" (1219)	76 3/16" (1935)	47 1/4" (1200)	82 3/8" (2092)	48" (1219)	83" (2108)	22.44 (2.08)	39 15/16" (1014)	43 13/16" (1113)	73 3/4" (1873)	11.46 (1.06)	29.64 (2.75)	32.34 (3.00)
40611	1	48" (1219)	76 3/16" (1935)	47 1/4" (1200)	82 3/8" (2092)	48" (1219)	83" (2108)	10.69 (0.99)	18 15/16" (481)	20 7/8" (530)	73 3/4" (1873)	11.46 (1.06)	14.29 (1.33)	32.34 (3.00)
50611	2	96" (2438)	77 11/16" (1973)	59 1/4" (1505)	82 3/8" (2092)	60" (1524)	83" (2108)	29.07 (2.70)	51 15/16" (1319)	55 13/16" (1418)	75" (1905)	17.09 (1.59)	37.35 (3.47)	40.32 (3.75)
50611	1	96" (2438)	77 11/16" (1973)	59 1/4" (1505)	82 3/8" (2092)	60" (1524)	83" (2108)	14.00 (1.30)	24 15/16" (633)	26 7/8" (683)	75" (1905)	17.09 (1.59)	18.15 (1.69)	40.32 (3.75)
54611	2	96" (2438)	77" (1956)	63 1/4" (1607)	82 3/8" (2092)	64" (1626)	83" (2108)	30.89 (2.87)	55 15/16" (1421)	59 13/16" (1519)	74 3/8" (1889)	18.84 (1.75)	39.77 (3.69)	42.80 (3.98)
54611	1	96" (2438)	77" (1956)	63 1/4" (1607)	82 3/8" (2092)	64" (1626)	83" (2108)	14.91 (1.39)	26 15/16" (684)	28 7/8" (733)	74 3/8" (1889)	18.84 (1.75)	19.35 (1.80)	42.80 (3.98)
60611	2	96" (2438)	75 1/2" (1918)	71 1/4" (1810)	82 3/8" (2092)	72" (1829)	83" (2108)	34.35 (3.19)	63 15/16" (1624)	67 13/16" (1722)	72 15/16" (1853)	22.28 (2.07)	44.53 (4.14)	47.71 (4.43)
60611	1	96" (2438)	75 1/2" (1918)	71 1/4" (1810)	82 3/8" (2092)	72" (1829)	83" (2108)	16.65 (1.55)	30 15/16" (786)	32 7/8" (835)	72 15/16" (1853)	22.28 (2.07)	21.74 (2.02)	47.71 (4.43)
64611	2	96" (2438)	74 11/16" (1897)	75 1/4" (1911)	82 3/8" (2092)	76" (1930)	83" (2108)	35.97 (3.34)	67 15/16" (1726)	71 13/16" (1824)	72 1/8" (1832)	23.98 (2.23)	50.78 (4.72)	54.16 (5.03)
64611	1	96" (2438)	74 11/16" (1897)	75 1/4" (1911)	82 3/8" (2092)	76" (1930)	83" (2108)	17.47 (1.62)	32 15/16" (837)	34 7/8" (886)	72 1/8" (1832)	23.98 (2.23)	25.22 (2.34)	54.16 (5.03)
4080	2	48" (1219)	89 5/16" (2269)	47 1/4" (1200)	95 1/2" (2426)	48" (1219)	96" (2438)	26.43 (2.46)	39 15/16" (1014)	43 13/16" (1113)	86 7/8" (2207)	13.76 (1.28)	33.66 (3.13)	36.60 (3.40)
4080	1	48" (1219)	89 5/16" (2269)	47 1/4" (1200)	95 1/2" (2426)	48" (1219)	96" (2438)	12.59 (1.17)	18 15/16" (481)	20 7/8" (530)	86 7/8" (2207)	13.76 (1.28)	14.29 (1.33)	36.60 (3.40)
5080	2	96" (2438)	90 13/16" (2307)	59 1/4" (1505)	95 1/2" (2426)	60" (1524)	96" (2438)	34.16 (3.17)	51 15/16" (1319)	55 13/16" (1418)	88 1/8" (2238)	20.50 (1.90)	42.47 (3.95)	45.67 (4.24)
5080	1	96" (2438)	90 13/16" (2307)	59 1/4" (1505)	95 1/2" (2426)	60" (1524)	96" (2438)	16.45 (1.53)	24 15/16" (633)	26 7/8" (683)	88 1/8" (2238)	20.50 (1.90)	18.15 (1.69)	45.67 (4.24)
5480	2	96" (2438)	90 1/8" (2289)	63 1/4" (1607)	95 1/2" (2426)	64" (1626)	96" (2438)	36.34 (3.38)	55 15/16" (1421)	59 13/16" (1519)	87 1/2" (2223)	22.61 (2.10)	45.24 (4.20)	48.51 (4.51)
5480	1	96" (2438)	90 1/8" (2289)	63 1/4" (1607)	95 1/2" (2426)	64" (1626)	96" (2438)	17.55 (1.63)	26 15/16" (684)	28 7/8" (733)	87 1/2" (2223)	22.61 (2.10)	19.35 (1.80)	48.51 (4.51)
6080	2	96" (2438)	88 5/8" (2251)	71 1/4" (1810)	95 1/2" (2426)	72" (1829)	96" (2438)	40.53 (3.77)	63 15/16" (1624)	67 13/16" (1722)	86 1/16" (2186)	26.78 (2.49)	50.73 (4.71)	54.14 (5.03)
6080	1	96" (2438)	88 5/8" (2251)	71 1/4" (1810)	95 1/2" (2426)	72" (1829)	96" (2438)	19.65 (1.83)	30 15/16" (786)	32 7/8" (835)	86 1/16" (2186)	26.78 (2.49)	21.74 (2.02)	54.14 (5.03)
6480	2	96" (2438)	87 13/16" (2230)	75 1/4" (1911)	95 1/2" (2426)	76" (1930)	96" (2438)	42.51 (3.95)	67 15/16" (1726)	71 13/16" (1824)	85 1/4" (2165)	28.83 (2.68)	57.33 (5.33)	60.95 (5.66)
6480	1	96" (2438)	87 13/16" (2230)	75 1/4" (1911)	95 1/2" (2426)	76" (1930)	96" (2438)	20.65 (1.92)	32 15/16" (837)	34 7/8" (886)	85 1/4" (2165)	28.83 (2.68)	25.22 (2.34)	60.95 (5.66)

- Door Dimension always refers to outside frame-to-frame dimension.
- **Minimum Rough Opening dimensions may need to be increased to allow for use of building wraps, flashing, sill panning, brackets, fasteners or other items. See pages 222-223 for more details.**
- Dimensions in parentheses are in millimeters or square meters.

*For two-panel patio doors with one panel open, clear opening is based on active panel open and passive panel closed.

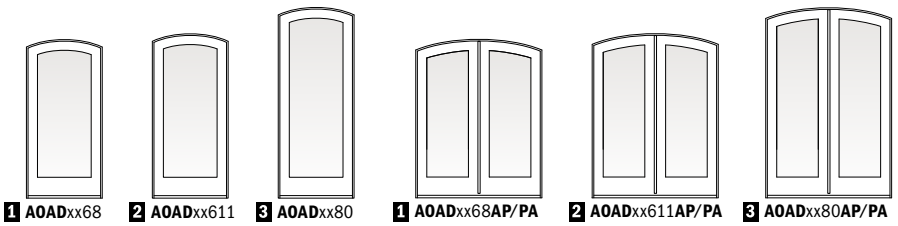

1 AOADxx68 **2 AOAD**xx611 **3 AOAD**xx80 **1 AOAD**xx68**AP/PA** **2 AOAD**xx611**AP/PA** **3 AOAD**xx80**AP/PA**

Custom-size patio doors are available in 1/8" (3) increments. Traditional panels are standard. Custom-design and 3/4-light panels are available. Stationary doors are also available (i.e., 2168**S** or 4068**SS**). Add **AOAD** to the Door Number listed in the table (i.e., **AOAD**2168).

Dimensions and Specifications for Complementary Arch Hinged Outswing Patio Doors

Door Number	Number of Panels Open*	Door Dimensions				Min. Rough Opening		Clear Opening Area Sq. Ft./(m²)	Clear Opening Maximums			Glass Area Sq. Ft./(m²)	Vent Area Sq. Ft./(m²)	Overall Door Area Sq. Ft./(m²)
		Radius Inches/(mm)	Side Height Inches/(mm)	Width Inches/(mm)	Height Inches/(mm)	Width Inches/(mm)	Height Inches/(mm)		90° Open Position Width Inches/(mm)	Full Open Position Width Inches/(mm)	Height Inches/(mm)			
2168	1	36" (914)	77 7/16" (1967)	23 15/16" (608)	79 1/2" (2019)	25" (635)	80" (2032)	11.06 (1.03)	19 3/8" (492)	21 5/16" (541)	74 3/4" (1899)	5.66 (0.53)	12.46 (1.16)	14.49 (1.35)
2768	1	48" (1219)	77 1/8" (1959)	29 15/16" (760)	79 1/2" (2019)	31" (787)	80" (2032)	14.11 (1.31)	25 3/8" (645)	27 5/16" (694)	74 3/8" (1889)	8.28 (0.77)	15.70 (1.46)	17.85 (1.66)
2968	1	48" (1219)	76 3/4" (1949)	31 15/16" (811)	79 1/2" (2019)	33" (838)	80" (2032)	15.08 (1.40)	27 3/8" (695)	29 5/16" (745)	74 1/16" (1881)	9.15 (0.85)	16.77 (1.56)	18.95 (1.76)
3168	1	48" (1219)	76" (1930)	35 15/16" (913)	79 1/2" (2019)	37" (940)	80" (2032)	16.97 (1.58)	31 3/8" (797)	33 5/16" (846)	73 3/8" (1864)	10.87 (1.01)	18.88 (1.75)	21.13 (1.96)
3368	1	48" (1219)	75 5/8" (1921)	37 15/16" (964)	79 1/2" (2019)	39" (991)	80" (2032)	17.90 (1.66)	33 3/8" (848)	35 5/16" (897)	73" (1854)	11.72 (1.09)	22.01 (2.04)	24.36 (2.26)
21611	1	36" (914)	80 5/16" (2040)	23 15/16" (608)	82 3/8" (2092)	25" (635)	83" (2108)	11.49 (1.07)	19 3/8" (492)	21 5/16" (541)	77 5/8" (1972)	5.93 (0.55)	14.39 (1.34)	16.65 (1.55)
27611	1	48" (1219)	80" (2032)	29 15/16" (760)	82 3/8" (2092)	31" (787)	83" (2108)	14.65 (1.36)	25 3/8" (645)	27 5/16" (694)	77 1/4" (1962)	8.68 (0.81)	18.17 (1.69)	20.55 (1.91)
29611	1	48" (1219)	79 5/8" (2022)	31 15/16" (811)	82 3/8" (2092)	33" (838)	83" (2108)	15.66 (1.45)	27 3/8" (695)	29 5/16" (745)	76 15/16" (1954)	9.58 (0.89)	19.41 (1.80)	21.83 (2.03)
31611	1	48" (1219)	78 7/8" (2003)	35 15/16" (913)	82 3/8" (2092)	37" (940)	83" (2108)	17.64 (1.64)	31 3/8" (797)	33 5/16" (846)	76 1/4" (1937)	11.39 (1.06)	21.89 (2.03)	24.37 (2.26)
33611	1	48" (1219)	78 1/2" (1994)	37 15/16" (964)	82 3/8" (2092)	39" (991)	83" (2108)	18.61 (1.73)	33 3/8" (848)	35 5/16" (897)	75 7/8" (1927)	12.28 (1.14)	25.19 (2.34)	27.78 (2.58)
2180	1	36" (914)	93 7/16" (2373)	23 15/16" (608)	95 1/2" (2426)	25" (635)	96" (2438)	13.43 (1.25)	19 3/8" (492)	21 5/16" (541)	90 3/4" (2305)	7.09 (0.66)	16.31 (1.52)	18.81 (1.75)
2780	1	48" (1219)	93 1/8" (2365)	29 15/16" (760)	95 1/2" (2426)	31" (787)	96" (2438)	17.14 (1.59)	25 3/8" (645)	27 5/16" (694)	90 3/8" (2296)	10.38 (0.96)	20.63 (1.92)	23.25 (2.16)
2980	1	48" (1219)	92 3/4" (2356)	31 15/16" (811)	95 1/2" (2426)	33" (838)	96" (2438)	18.33 (1.70)	27 3/8" (695)	29 5/16" (745)	90 1/16" (2288)	11.47 (1.07)	22.06 (2.05)	24.71 (2.30)
3180	1	48" (1219)	92" (2337)	35 15/16" (913)	95 1/2" (2426)	37" (940)	96" (2438)	20.68 (1.92)	31 3/8" (797)	33 5/16" (846)	89 3/8" (2270)	13.63 (1.27)	24.89 (2.31)	27.62 (2.57)
3380	1	48" (1219)	91 5/8" (2327)	37 15/16" (964)	95 1/2" (2426)	39" (991)	96" (2438)	21.83 (2.03)	33 3/8" (848)	35 5/16" (897)	89" (2261)	14.71 (1.37)	28.38 (2.64)	31.20 (2.90)
4068	2	48" (1219)	73 5/16" (1862)	47 1/4" (1200)	79 1/2" (2019)	48" (1219)	80" (2032)	21.93 (2.04)	40 11/16" (1033)	44 5/8" (1133)	70 3/4" (1797)	10.93 (1.02)	25.61 (2.38)	28.07 (2.61)
4068	1	48" (1219)	73 5/16" (1862)	47 1/4" (1200)	79 1/2" (2019)	48" (1219)	80" (2032)	10.44 (0.97)	19 1/4" (489)	21 1/4" (540)	70 3/4" (1797)	10.93 (1.02)	12.22 (1.14)	28.07 (2.61)
5068	2	96" (2438)	74 13/16" (1900)	59 1/4" (1505)	79 1/2" (2019)	60" (1524)	80" (2032)	28.36 (2.63)	52 11/16" (1338)	56 5/8" (1438)	72 1/8" (1832)	16.30 (1.51)	32.24 (3.00)	34.97 (3.25)
5068	1	96" (2438)	74 13/16" (1900)	59 1/4" (1505)	79 1/2" (2019)	60" (1524)	80" (2032)	13.65 (1.27)	25 1/4" (641)	27 1/4" (692)	72 1/8" (1832)	16.30 (1.51)	15.54 (1.44)	34.97 (3.25)
5468	2	96" (2438)	74 1/8" (1883)	63 1/4" (1607)	79 1/2" (2019)	64" (1626)	80" (2032)	30.08 (2.79)	56 11/16" (1440)	60 5/8" (1540)	71 7/16" (1815)	17.97 (1.67)	34.29 (3.19)	37.09 (3.45)
5468	1	96" (2438)	74 1/8" (1883)	63 1/4" (1607)	79 1/2" (2019)	64" (1626)	80" (2032)	14.51 (1.35)	27 1/4" (692)	29 1/4" (743)	71 7/16" (1815)	17.97 (1.67)	16.56 (1.54)	37.09 (3.45)
6068	2	96" (2438)	72 5/8" (1845)	71 1/4" (1810)	79 1/2" (2019)	72" (1829)	80" (2032)	33.36 (3.10)	64 11/16" (1643)	68 5/8" (1743)	70" (1778)	21.25 (1.97)	38.33 (3.56)	41.27 (3.83)
6068	1	96" (2438)	72 5/8" (1845)	71 1/4" (1810)	79 1/2" (2019)	72" (1829)	80" (2032)	16.16 (1.50)	31 1/4" (794)	33 1/4" (845)	70" (1778)	21.25 (1.97)	18.58 (1.73)	41.27 (3.83)
6468	2	96" (2438)	71 13/16" (1824)	75 1/4" (1911)	79 1/2" (2019)	76" (1930)	80" (2032)	34.89 (3.24)	68 11/16" (1745)	72 5/8" (1845)	69 3/16" (1757)	22.86 (2.12)	44.22 (4.11)	47.36 (4.40)
6468	1	96" (2438)	71 13/16" (1824)	75 1/4" (1911)	79 1/2" (2019)	76" (1930)	80" (2032)	16.94 (1.57)	33 1/4" (845)	35 1/4" (895)	69 3/16" (1757)	22.86 (2.12)	21.53 (2.00)	47.36 (4.40)
40611	2	48" (1219)	76 3/16" (1935)	47 1/4" (1200)	82 3/8" (2092)	48" (1219)	83" (2108)	22.82 (2.12)	40 11/16" (1033)	44 5/8" (1133)	73 5/8" (1870)	11.46 (1.06)	29.64 (2.75)	32.34 (3.00)
40611	1	48" (1219)	76 3/16" (1935)	47 1/4" (1200)	82 3/8" (2092)	48" (1219)	83" (2108)	10.86 (1.01)	19 1/4" (489)	21 1/4" (540)	73 5/8" (1870)	11.46 (1.06)	14.29 (1.33)	32.34 (3.00)
50611	2	96" (2438)	77 11/16" (1973)	59 1/4" (1505)	82 3/8" (2092)	60" (1524)	83" (2108)	29.49 (2.74)	52 11/16" (1338)	56 5/8" (1438)	75" (1905)	17.09 (1.59)	37.35 (3.47)	40.32 (3.75)
50611	1	96" (2438)	77 11/16" (1973)	59 1/4" (1505)	82 3/8" (2092)	60" (1524)	83" (2108)	14.19 (1.32)	25 1/4" (641)	27 1/4" (692)	75" (1905)	17.09 (1.59)	18.15 (1.69)	40.32 (3.75)
54611	2	96" (2438)	77" (1956)	63 1/4" (1607)	82 3/8" (2092)	64" (1626)	83" (2108)	31.29 (2.91)	56 11/16" (1440)	60 5/8" (1540)	74 5/16" (1888)	18.84 (1.75)	39.77 (3.69)	42.80 (3.98)
54611	1	96" (2438)	77" (1956)	63 1/4" (1607)	82 3/8" (2092)	64" (1626)	83" (2108)	15.09 (1.40)	27 1/4" (692)	29 1/4" (743)	74 5/16" (1888)	18.84 (1.75)	19.35 (1.80)	42.80 (3.98)
60611	2	96" (2438)	75 1/2" (1918)	71 1/4" (1810)	82 3/8" (2092)	72" (1829)	83" (2108)	34.73 (3.23)	64 11/16" (1643)	68 5/8" (1743)	72 7/8" (1851)	22.28 (2.07)	44.53 (4.14)	47.71 (4.43)
60611	1	96" (2438)	75 1/2" (1918)	71 1/4" (1810)	82 3/8" (2092)	72" (1829)	83" (2108)	16.83 (1.56)	31 1/4" (794)	33 1/4" (845)	72 7/8" (1851)	22.28 (2.07)	21.74 (2.02)	47.71 (4.43)
64611	2	96" (2438)	74 11/16" (1897)	75 1/4" (1911)	82 3/8" (2092)	76" (1930)	83" (2108)	36.34 (3.38)	68 11/16" (1745)	72 5/8" (1845)	72 1/16" (1830)	23.98 (2.23)	50.78 (4.72)	54.16 (5.03)
64611	1	96" (2438)	74 11/16" (1897)	75 1/4" (1911)	82 3/8" (2092)	76" (1930)	83" (2108)	17.64 (1.64)	33 1/4" (845)	35 1/4" (895)	72 1/16" (1830)	23.98 (2.23)	25.22 (2.34)	54.16 (5.03)
4080	2	48" (1219)	89 5/16" (2269)	47 1/4" (1200)	95 1/2" (2426)	48" (1219)	96" (2438)	26.88 (2.50)	40 11/16" (1033)	44 5/8" (1133)	86 3/4" (2203)	13.76 (1.28)	33.66 (3.13)	36.60 (3.40)
4080	1	48" (1219)	89 5/16" (2269)	47 1/4" (1200)	95 1/2" (2426)	48" (1219)	96" (2438)	12.80 (1.19)	19 1/4" (489)	21 1/4" (540)	86 3/4" (2203)	13.76 (1.28)	14.29 (1.33)	36.60 (3.40)
5080	2	96" (2438)	90 13/16" (2307)	59 1/4" (1505)	95 1/2" (2426)	60" (1524)	96" (2438)	34.65 (3.22)	52 11/16" (1338)	56 5/8" (1438)	88 1/8" (2238)	20.50 (1.90)	42.47 (3.95)	45.67 (4.24)
5080	1	96" (2438)	90 13/16" (2307)	59 1/4" (1505)	95 1/2" (2426)	60" (1524)	96" (2438)	16.68 (1.55)	25 1/4" (641)	27 1/4" (692)	88 1/8" (2238)	20.50 (1.90)	18.15 (1.69)	45.67 (4.24)
5480	2	96" (2438)	90 1/8" (2289)	63 1/4" (1607)	95 1/2" (2426)	64" (1626)	96" (2438)	36.81 (3.42)	56 11/16" (1440)	60 5/8" (1540)	87 7/16" (2221)	22.61 (2.10)	45.24 (4.20)	48.51 (4.51)
5480	1	96" (2438)	90 1/8" (2289)	63 1/4" (1607)	95 1/2" (2426)	64" (1626)	96" (2438)	17.76 (1.65)	27 1/4" (692)	29 1/4" (743)	87 7/16" (2221)	22.61 (2.10)	19.35 (1.80)	48.51 (4.51)
6080	2	96" (2438)	88 5/8" (2251)	71 1/4" (1810)	95 1/2" (2426)	72" (1829)	96" (2438)	40.98 (3.81)	64 11/16" (1643)	68 5/8" (1743)	86" (2184)	26.78 (2.49)	50.73 (4.71)	54.14 (5.03)
6080	1	96" (2438)	88 5/8" (2251)	71 1/4" (1810)	95 1/2" (2426)	72" (1829)	96" (2438)	19.86 (1.84)	31 1/4" (794)	33 1/4" (845)	86" (2184)	26.78 (2.49)	21.74 (2.02)	54.14 (5.03)
6480	2	96" (2438)	87 13/16" (2230)	75 1/4" (1911)	95 1/2" (2426)	76" (1930)	96" (2438)	42.96 (3.99)	68 11/16" (1745)	72 5/8" (1845)	85 3/16" (2164)	28.83 (2.68)	57.33 (5.33)	60.95 (5.66)
6480	1	96" (2438)	87 13/16" (2230)	75 1/4" (1911)	95 1/2" (2426)	76" (1930)	96" (2438)	20.85 (1.94)	33 1/4" (845)	35 1/4" (895)	85 3/16" (2164)	28.83 (2.68)	25.22 (2.34)	60.95 (5.66)

- Door Dimension always refers to outside frame-to-frame dimension.
- **Minimum Rough Opening dimensions may need to be increased to allow for use of building wraps, flashing, sill panning, brackets, fasteners or other items. See pages 222-223 for more details.**
- Dimensions in parentheses are in millimeters or square meters.

*For two-panel patio doors with one panel open, clear opening is based on active panel open and passive panel closed.

COMPLEMENTARY CURVED TOP PATIO DOORS

Complementary Arch Patio Door Sidelights

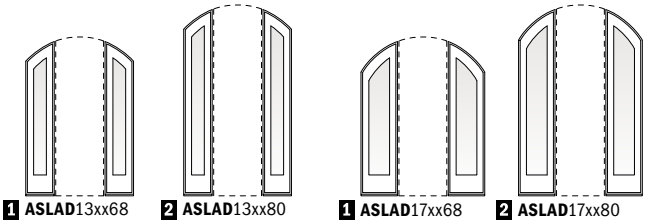

1 **ASLAD**13xx68 **2** **ASLAD**13xx80 **1** **ASLAD**17xx68 **2** **ASLAD**17xx80

Custom sized in 1/8" (3) increments.

Standard sizes in two widths and heights. Contact your Andersen supplier for sidelight dimensions and specifications. Sash-set arch patio door sidelights, shown, are standard. Direct-set sidelights are available by special order.

Order Designation Description

Viewed from the exterior.

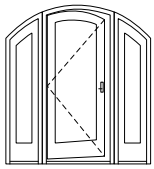

17	AHIAD	3168	A	L
Flanking Unit Width	Andersen® Arch Hinged Inswing Door	Door Rough Opg.	Active Panel	Left Hinged

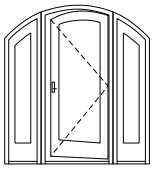

17	AHIAD	3168	A	R
Flanking Unit Width	Andersen Arch Hinged Inswing Door	Door Rough Opg.	Active Panel	Right Hinged

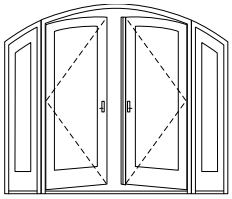

17	AHIAD	6480	A	P	L	R
Flanking Unit Width	Andersen Arch Hinged Inswing Door	Door Rough Opg.	Active Panel	Passive Panel	Left Hinged	Right Hinged

Arch inswing patio doors (**AHIAD**) shown above; for arch outswing patio doors use **AOAD**. Outswing patio doors open outward to the exterior.

Details for Complementary Arch Patio Door Sidelights

Scale 1 1/2" (38) = 1'-0" (305) – 1:8

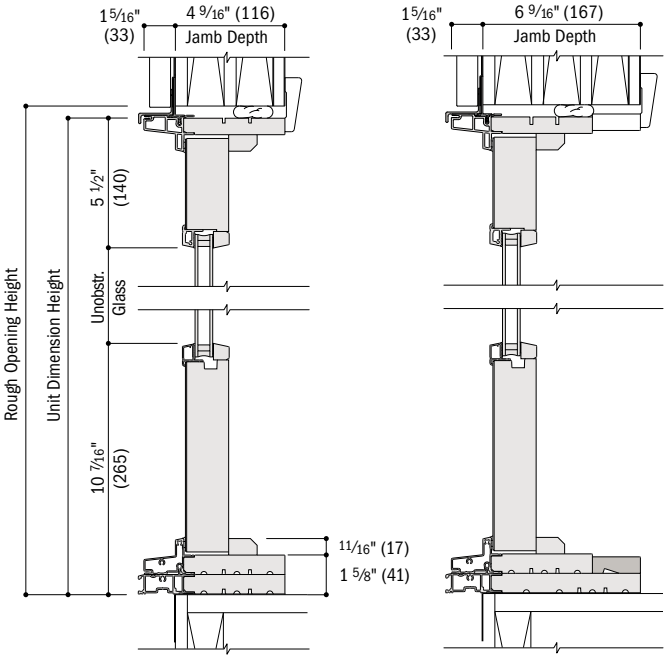

Vertical Sections

Vertical Joining Details

Scale 1 1/2" (38) = 1'-0" (305) – 1:8

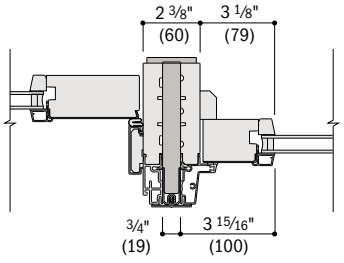

Complementary Arch Inswing Patio Door to Complementary Arch Patio Door Sidelight
4 9/16" (116) Jamb Depth

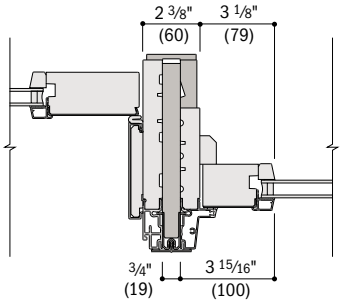

Complementary Arch Inswing Patio Door to Complementary Arch Patio Door Sidelight
6 9/16" (167) Jamb Depth

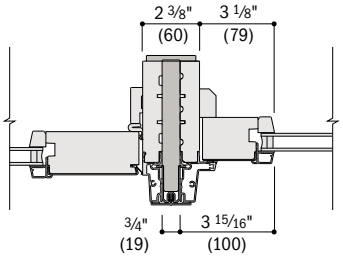

Complementary Arch Outswing Patio Door to Complementary Arch Patio Door Sidelight

- 4 9/16" (116) and 6 9/16" (167) overall jamb depth measurements are from back side of installation flange.
- Light-colored areas are parts included with window and/or door. Dark-colored areas are additional Andersen® parts required to complete window and/or door assembly as shown.
- **Minimum rough openings may need to be increased to allow for use of building wraps, flashing, sill panning, brackets, fasteners or other items. See installation information on pages 222-223.**
- Details are for illustration only and are not intended to represent product installation methods or materials. Refer to product installation guides at andersenwindows.com.
- Structural performance of any combination is only as high as the lowest structural performance of any individual product or join in the combination.
- Dimensions in parentheses are in millimeters.

Details for Complementary Arch Hinged Inswing Patio Doors – 4 9/16" (116) Jamb Depth

Scale 1 1/2" (38) = 1'-0" (305) – 1:8

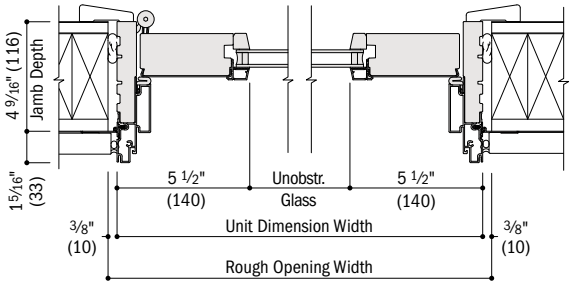

Horizontal Section

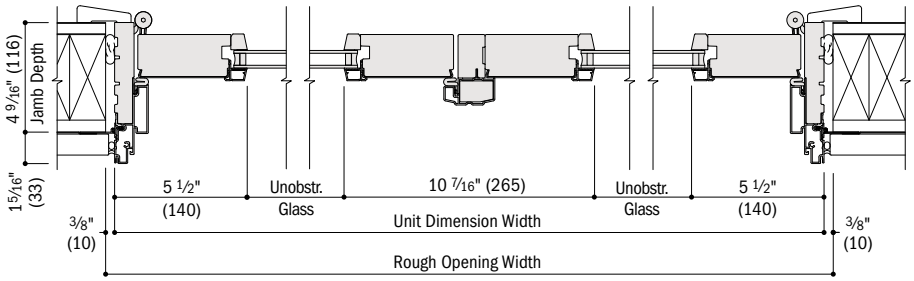

Horizontal Section
Two-Panel

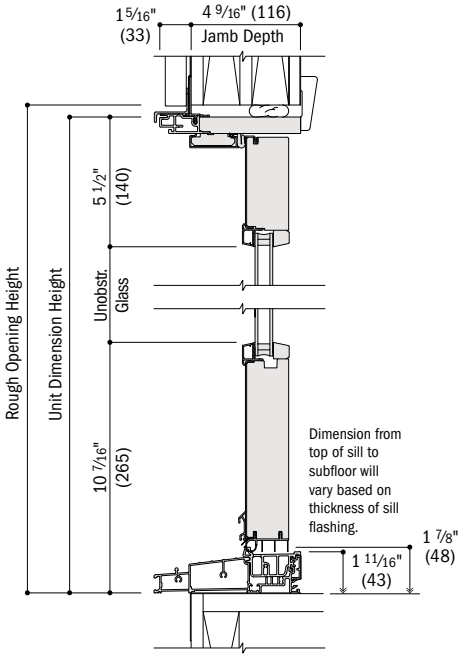

Vertical Section

Details for Complementary Arch Hinged Inswing Patio Doors – 6 9/16" (167) Jamb Depth

Scale 1 1/2" (38) = 1'-0" (305) – 1:8

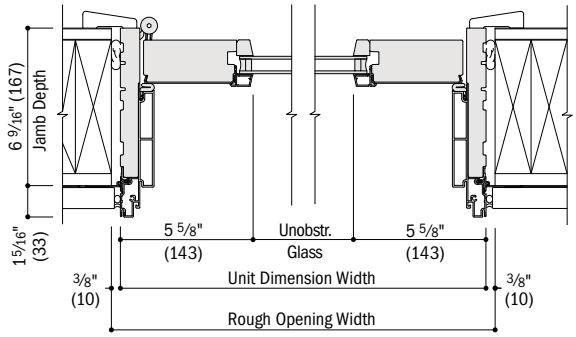

Horizontal Section

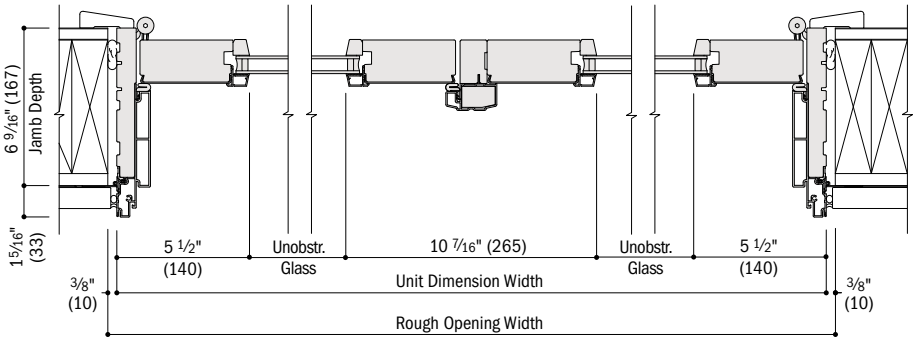

Horizontal Section
Two-Panel

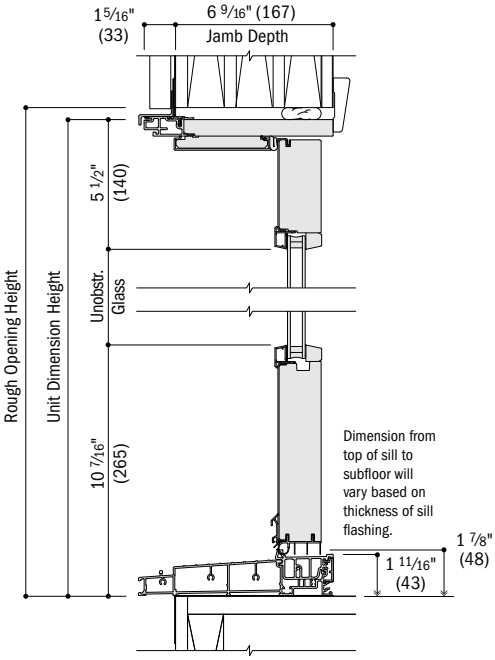

Vertical Section

- 4 9/16" (116) and 6 9/16" (167) overall jamb depth measurements are from back side of installation flange.
- Light-colored areas are parts included with door. Dark-colored areas are additional Andersen® parts required to complete door assembly as shown.
- **Minimum rough openings may need to be increased to allow for use of building wraps, flashing, sill panning, brackets, fasteners or other items. See installation information on pages 222-223.**
- Details are for illustration only and are not intended to represent product installation methods or materials. Refer to product installation guides at andersenwindows.com.
- Dimensions in parentheses are in millimeters.

COMPLEMENTARY CURVED TOP PATIO DOORS

Details for Complementary Arch Hinged Outswing Patio Doors – 4 9/16" (116) Jamb Depth

Scale 1 1/2" (38) = 1'-0" (305) – 1:8

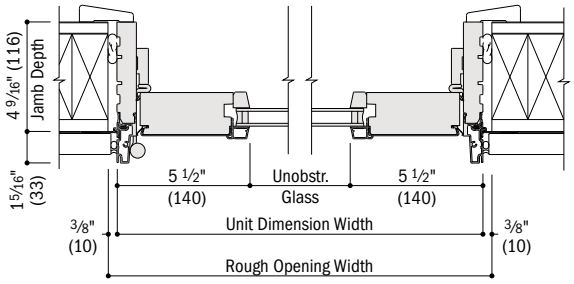

Horizontal Section

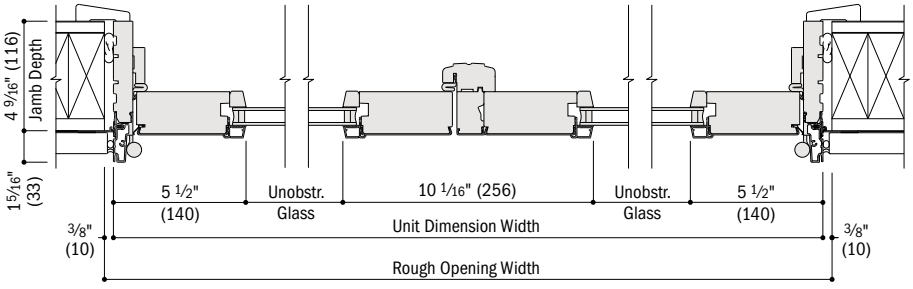

Horizontal Section

Two-Panel

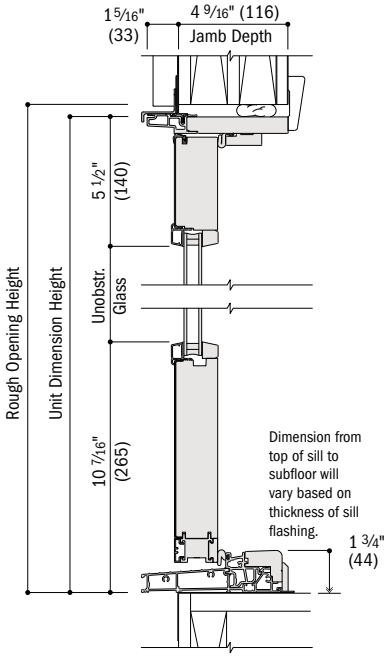

Vertical Section

- 4 9/16" (116) overall jamb depth measurement is from back side of installation flange.
- Light-colored areas are parts included with door. Dark-colored areas are additional Andersen® parts required to complete door assembly as shown.
- **Minimum rough openings may need to be increased to allow for use of building wraps, flashing, sill panning, brackets, fasteners or other items. See installation information on pages 222-223.**
- Details are for illustration only and are not intended to represent product installation methods or materials. Refer to product installation guides at andersenwindows.com.
- Dimensions in parentheses are in millimeters.

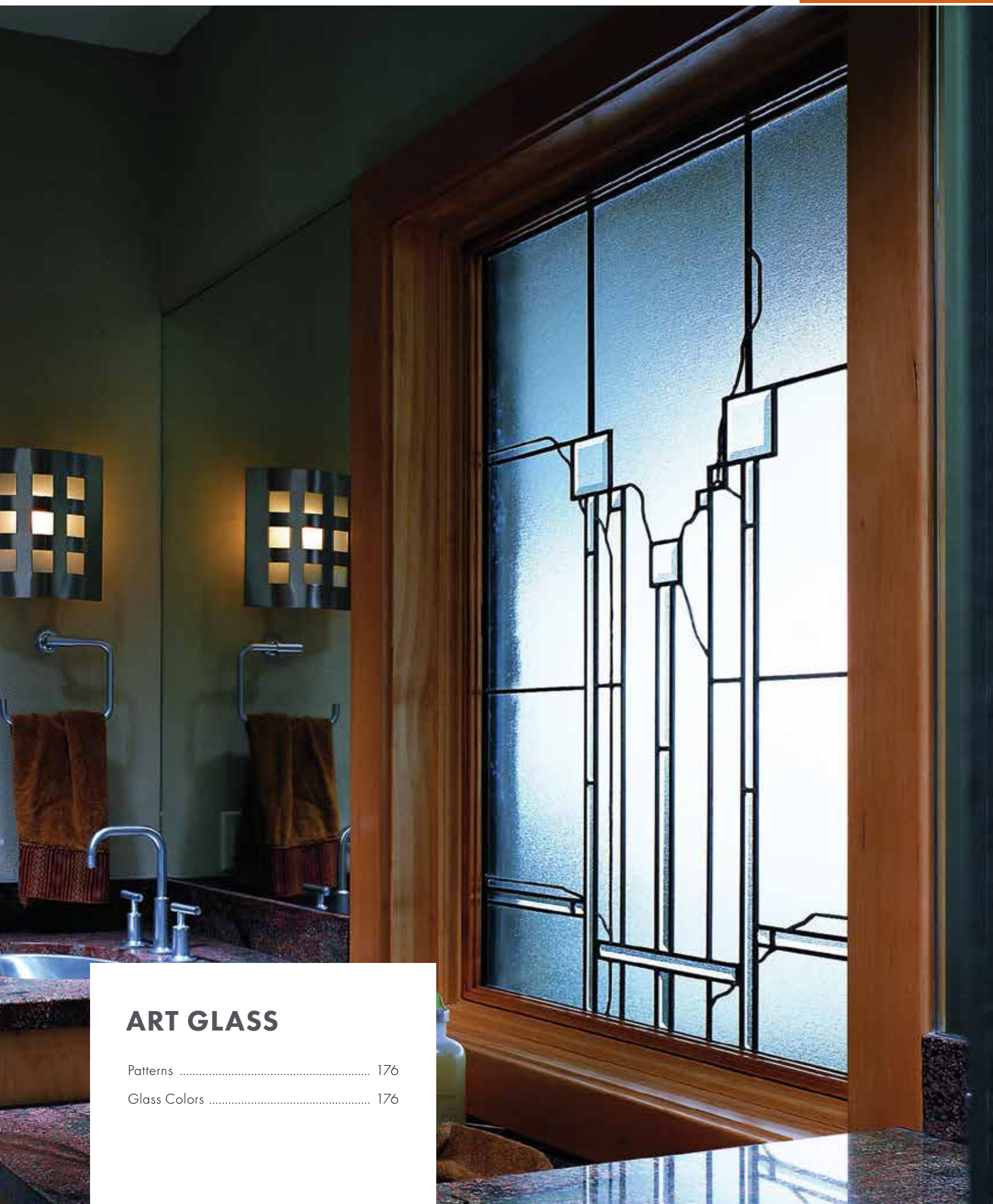

ART GLASS

Patterns 176
Glass Colors 176

ART GLASS

FEATURES

FRAME

Andersen® art glass panel kits, for most units, include pine and laminated maple trim to give each installation a finished appearance. Panels are edged with steel-reinforced zinc caming for stability.

INSTALLATION

Package Contents

Installation brackets, wood trim pieces (when applicable), brass screws, and complete installation and cleaning instructions are included with each Andersen art glass panel.

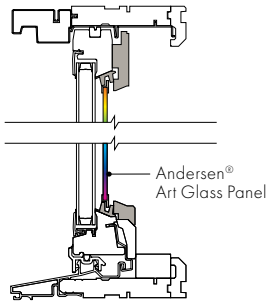

Installation Brackets

Panels are secured with polypropylene snap-lock installation brackets.

AVAILABILITY

Andersen art glass panels are sized to fit Andersen casement, awning, tilt-wash transom and picture, half circle, elliptical, circle, oval, arch and Flexiframe® windows; Frenchwood® hinged patio doors; and Frenchwood patio door sidelights and transoms.

GLASS OPTIONS

Patterns

Available in Classic and Artisan Series patterns. Contact your Andersen supplier for more information including pattern details for specific unit sizes.

Colors

Patterns are offered in standard color palletes, or choose from the colors shown below for glass and jewel accents to create custom color combinations.

Caming

Andersen gives you a choice of antique, bright goldtone or silvertone caming, the ornamental material used to hold sections of decorative glass in place.

Visit andersenwindows.com/artglass for more information.

PATTERNS

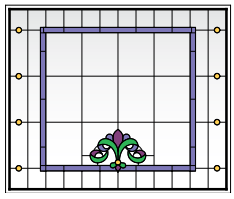

Victoria
Violet, deep rose and deep green with amber jewels

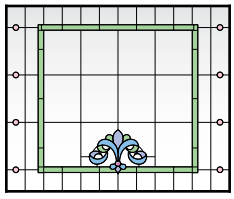

Victoria
Light green, lilac and light blue with pink and lilac jewels

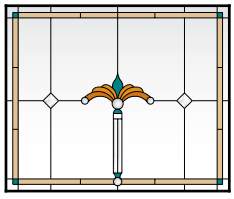

Regency
Sand, deep teal, topaz and copper with smoke jewels

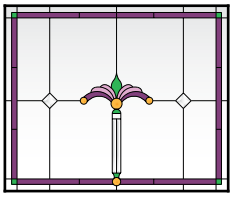

Regency
Deep rose, deep green and rose with opal amber jewels

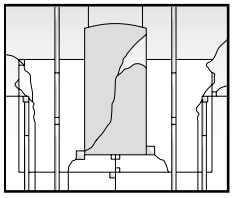

Harmonics
Opal, sage and clear bevels (right orientation)

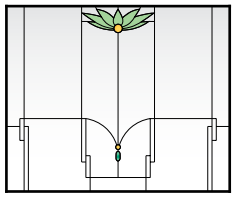

Lotus
Light green with amber and green jewels

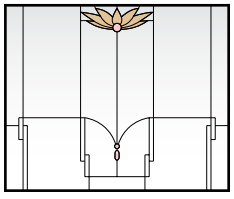

Lotus
Sand with pink jewels

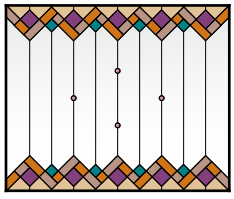

Taos
Dusty coral, copper, sand, deep rose and deep teal with lilac jewels

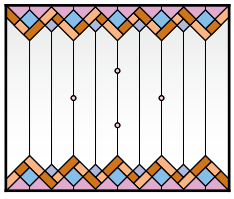

Taos
Peach, copper, rose, lilac and light blue with pink jewels

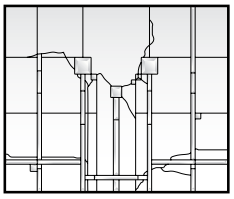

Affinity
No color and clear bevels (right orientation)

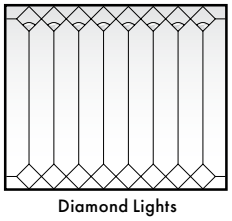

Diamond Lights
Clear fan-shaped bevels

CLASSIC SERIES

The Classic Series includes five styles that represent major architectural design themes from the late 1800s through the 1930s, as well as a Southwestern-inspired design. Classic Series glass patterns are also available with semi-privacy glass or clear antique glass in place of colored glass.

ARTISAN SERIES

These two designs influenced by 20th century American and European architectural schools feature striking visual patterns that evoke an extraordinary blend of art and nature. Artisan Series glass patterns are available in a left or right orientation as viewed from the exterior.

GLASS COLORS

Clear, semi-privacy and clear antique glass are also available for custom color combinations.

Peach | Dusty Coral | Topaz | Sand | Copper | Deep Rose | Rose

Deep Green | Sage | Light Green | Deep Teal | Light Blue | Violet | Lilac

Jewel Accents

Opal Amber | Amber | Smoke

Pink | Lilac | Green

Andersen art glass panel patterns vary based on window size and shape. Contact your Andersen supplier for complete pattern information.
Classic Series and Artisan Series colors may vary from photos and actual glass samples due to the unique character of the mouth-blown glass.
Art glass changes appearance greatly based on lighting in its environment, making it beautiful to look at yet difficult to represent accurately. Printing limitations prevent exact duplication of colors.



EXTERIOR TRIM

Flat Casings 180
Brick Mould 181
Sill Nose 181
Decorative Drip Cap 182
Cornices 182
Mull Cover 182

EXTERIOR TRIM

FEATURES

EXTERIOR TRIM SYSTEM

Thick trim profiles overlap the window frame to create clean lines without visible sealant joints. Profiles are shown on page 179.

Ⓐ For exceptional long-lasting* performance, exterior trim is made from Fibrex® material or high-density urethane with low-maintenance exterior finishes.

Ⓑ Sill nose profile, made from Fibrex material, is placed at the sill for a traditional look.

Ⓒ Rigid vinyl exterior trim attachment strips (field applied) allow the trim to be securely fastened to the home.

Ⓓ Trim surrounds are assembled with corner keys and stainless steel fasteners for stability and strength.

ENGINEERED WITH FIBREX®

Made of Fibrex material that is an environmentally smart composite, containing 40% pre-consumer recycled wood fiber by weight.



Flat casing and sill nose in white shown with a Terratone window.

Drip Cap

Full-length, color-matched aluminum drip cap is included with kits and surrounds.

End Caps

End caps provide a clean appearance when joining two trim members.

Corner Keys

Corner keys provide tight alignment of corner joints.

Fasteners

Screws are made of high-quality stainless steel and provide corner joints with a secure, tight fit.

Optional Head Trim

Head trim can be added above our flat casing and includes an integrated installation flange. The decorative drip cap is made from our Fibrex material. Both the 2" (51) cornice and 3⅝" (92) cornice are made from highly durable urethane material. See page 179.

Easy Installation

- Installs independently of a water management system
- No nail holes to fill
- No visible fasteners
- No painting

INSTALLATION OPTIONS

Preassembled Trim Surrounds

Factory-assembled surrounds install quickly and eliminate measuring, cutting, mitering and filling nail holes.

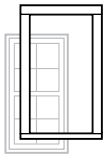

Precut Kits

Knock-down kits include precut and predrilled trim with all the necessary components for on-site assembly for windows.

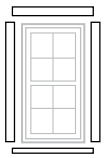

Individual Trim Components

13' (3962) factory-finished trim lineals, end caps, corner keys, fasteners, metal drip caps and field attachment strips allow for field fabrication and assembly.



Visit **andersenwindows.com** for exterior trim installation instructions.

EXTERIOR TRIM COLORS

White | Canvas | Prairie Grass | Sandtone | Terratone | Cocoa Bean | Dark Bronze | Red Rock | Forest Green | Dove Gray | Black

COMBINATIONS

Mix and match trim to create a variety of combinations. For more information or to design a window with exterior trim, visit **andersenwindows.com/exteriortrim**.

Flat Casing

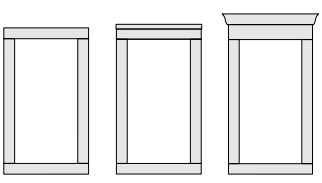

Flat casing on four sides and optional decorative drip cap or cornice.

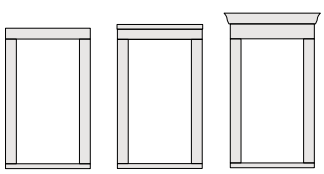

Flat casing on three sides and optional decorative drip cap or cornice with sill nose

Brick Mould

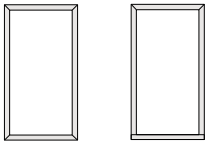

Brick mould on four sides.

Brick mould on three sides with sill nose.

*See the 400 Series limited warranty for exterior trim applied to 400 Series products. Visit andersenwindows.com/warranty for details.

Printing limitations prevent exact duplication of colors. See your Andersen supplier for actual color samples.

Dimensions in parentheses are in millimeters.

PROFILES



2" (51) Brick Mould in dove gray with Terratone window



3 ½" (89) Flat Casing in dark bronze with white window



4 ½" (114) Flat Casing in canvas with black window

HEAD OPTIONS



Decorative Drip Cap over 3 ½" (89) flat casing in cocoa bean with Sandtone window



2" (51) Cornice over 3 ½" (89) flat casing in cocoa bean with Sandtone window



3 ⅝" (92) Cornice over 3 ½" (89) flat casing in cocoa bean with Sandtone window

SILL OPTIONS



2" (51) Brick Mould and sill nose in dove gray with Terratone window



3 ½" (89) Flat Casing and sill nose in dark bronze with white window



4 ½" (114) Flat Casing and sill nose in canvas with black window

ACCESSORIES

INSTALLATION

Specialty Trim



Made of highly durable factory-finished urethane material for selected shapes. Contact your Andersen supplier for availability.

Fibrex® Trim Board



Available in the same 11 colors as our exterior trim, this solid cellular Fibrex trim board can be cut or ripped to size, and fastened using nails or screws. 3 ½" (89) wide by ¾" (19) thick in 10' (3048) lengths.

Coil Stock

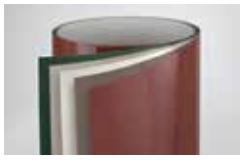

Andersen® aluminum coil stock allows you to form your own profiles in the field and can be ordered to match any of our 11 exterior trim colors. Made from .018"-thick aluminum, coil stock is available in 24" (610) x 50' (15240) rolls. Color-matched 1 ¼" (32)-long stainless steel trim nails are also available and can be ordered in 1 lb/.454 kg boxes.

Dimensions in parentheses are in millimeters.

Window and Patio Door Attachment

Field-Applied Attachment Strip

A field-applied attachment strip fastens to the framing through the window or patio door installation flange and flashing tape with screws. Exterior trim connects securely to the field-applied attachment strip. Follow window and patio door installation guides for flashing instructions.

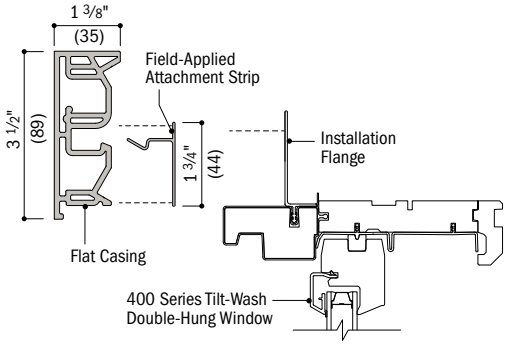

3 1/2" and 4 1/2" Flat Casings

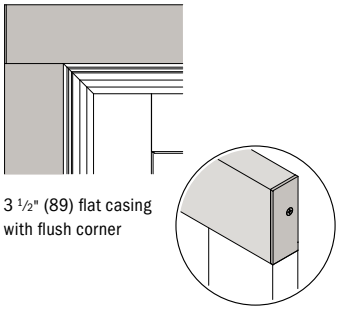

3 1/2" (89) flat casing with flush corner

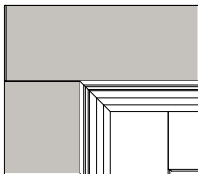

4 1/2" (114) flat casing with flush corner

Formula for dimension of window/door plus exterior trim:

Add 4 1/4" (108) per side for 4 1/2" (114) flat casing

Add 3 1/4" (83) per side for 3 1/2" (89) flat casing

End caps are used at the corners for flat casing and are handed as viewed from the exterior.

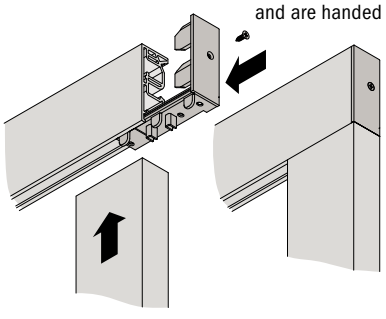

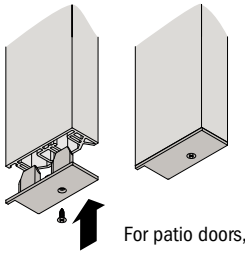

For patio doors, end caps are used at the sill.

Trim Details

Scale 3" (76) = 1'-0" (305) – 1:4

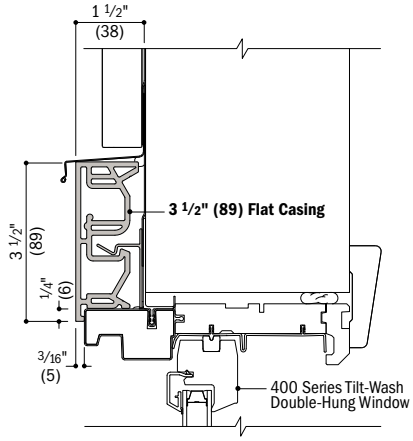

Vertical Section

400 Series Tilt-Wash Double-Hung Window with 3 1/2" (89) Flat Casing

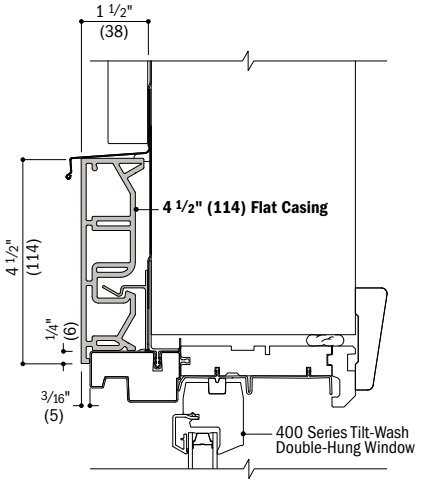

Vertical Section

400 Series Tilt-Wash Double-Hung Window with 4 1/2" (114) Flat Casing

- Typical trim combinations shown. Additional combinations may also be used. Some restrictions apply. For more information, contact your Andersen supplier.
- Details are for illustration only and are not intended to represent product installation methods or materials. Refer to product installation guides at andersenwindows.com.
- Dimensions in parentheses are in millimeters.

Brick Mould

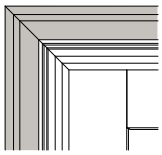

Brick mould with mitered corners

Formula for dimension of window/door plus exterior trim:

Add 1 3/4" (44) per side for brick mould

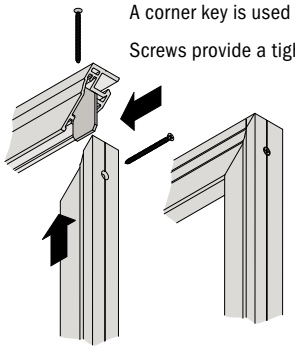

A corner key is used at the corner joints.

Screws provide a tight fit.

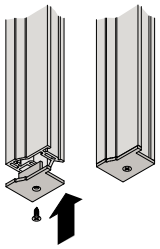

For patio doors, end caps are used at the sill.

Trim Detail

Scale 3" (76) = 1'-0" (305) – 1:4

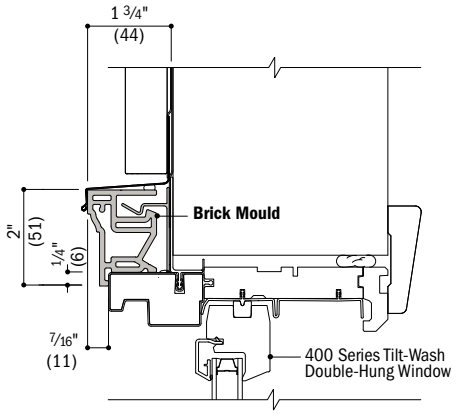

Vertical Section

400 Series Tilt-Wash Double-Hung Window with Brick Mould

Sill Nose

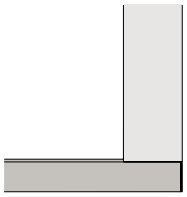

Sill nose and 3 1/2" (89) flat casing with flush corner

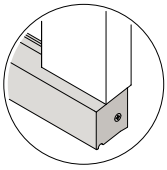

Formula for dimension of window plus exterior trim:

Add 1 15/16" (49) for sill nose

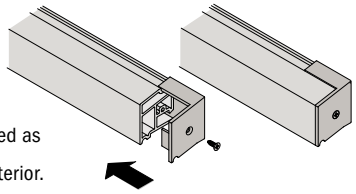

End caps are handed as viewed from the exterior.

Trim Detail

Scale 3" (76) = 1'-0" (305) – 1:4

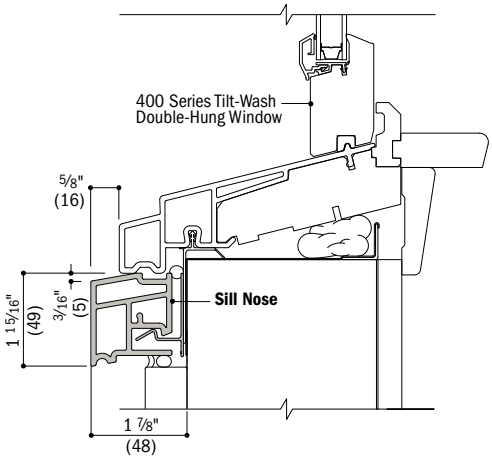

Vertical Section

400 Series Tilt-Wash Double-Hung Window with Sill Nose

- Typical trim combinations shown. Additional combinations may also be used. Some restrictions apply. For more information, contact your Andersen supplier.
- Details are for illustration only and are not intended to represent product installation methods or materials. Refer to product installation guides at andersenwindows.com.
- Dimensions in parentheses are in millimeters.

Decorative Drip Cap

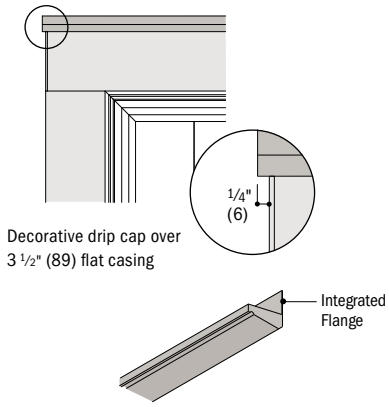

Decorative drip cap over
3 1/2" (89) flat casing

Cornices

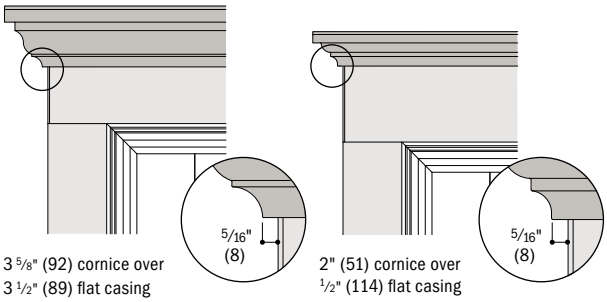

3 5/8" (92) cornice over
3 1/2" (89) flat casing

2" (51) cornice over
1/2" (114) flat casing

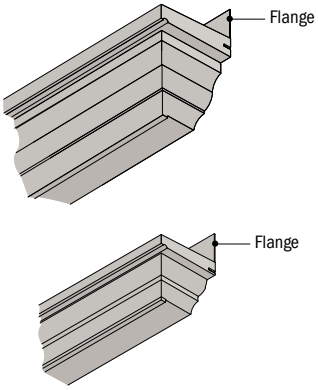

Trim Details

Scale 3" (76) = 1'-0" (305) – 1:4

Trim Detail

Scale 3" (76) = 1'-0" (305) – 1:4

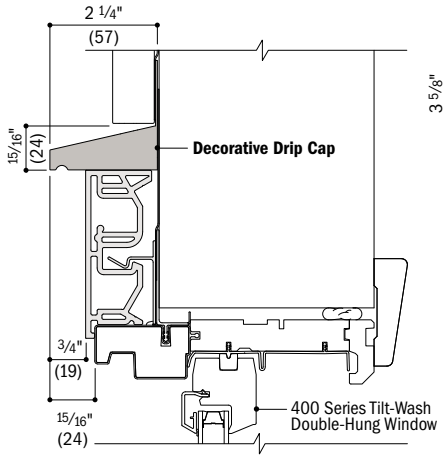

Vertical Section
400 Series Tilt-Wash Double-Hung Window
with Decorative Drip Cap over 3 1/2" (89) Flat Casing

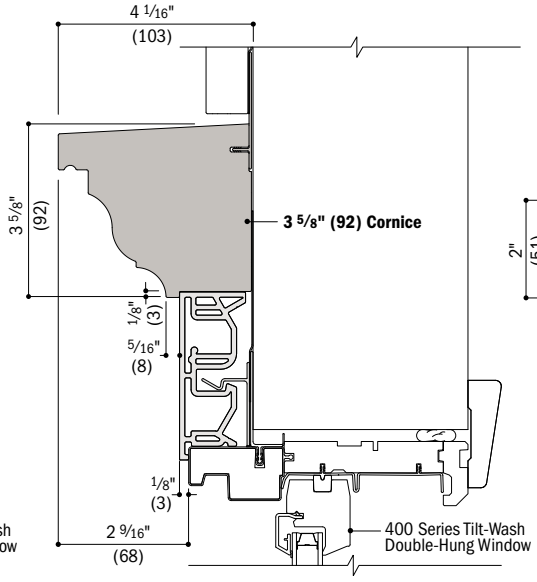

Vertical Section
400 Series Tilt-Wash Double-Hung Window
with 3 5/8" (92) Cornice over 3 1/2" (89) Flat Casing

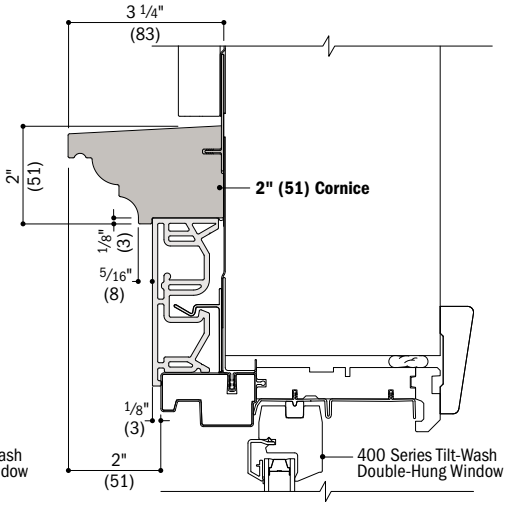

Vertical Section
400 Series Tilt-Wash Double-Hung Window
with 2" (51) Cornice over 3 1/2" (89) Flat Casing

Mull Cover

A 3 3/4" (95) mull cover is available for installations where windows or patio doors have been installed into separate rough openings to obtain a joined appearance.

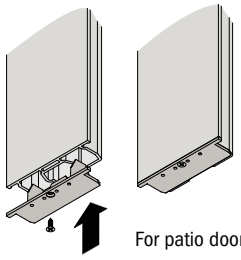

For patio doors, end caps are used at the sill.

Separate Rough Openings Detail

Scale 3" (76) = 1'-0" (305) – 1:4

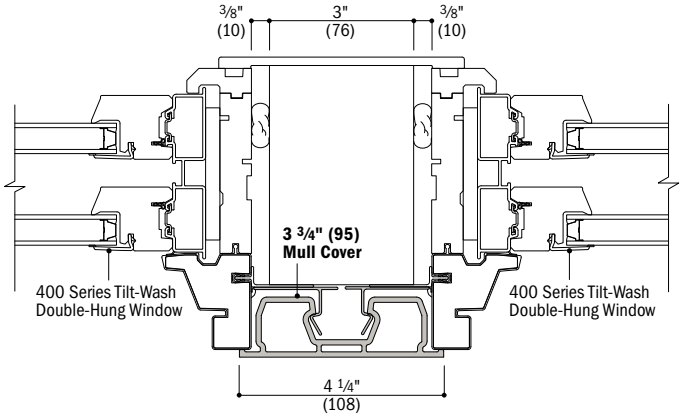

Horizontal Section
400 Series Tilt-Wash Double-Hung Windows and 3 3/4" (95) Mull Cover

- Typical trim combinations shown. Additional combinations may also be used. Some restrictions apply. For more information, contact your Andersen supplier.
- Details are for illustration only and are not intended to represent product installation methods or materials. Refer to product installation guides at andersenwindows.com.
- Consult with an architect or structural engineer regarding minimum requirements for structural support members between adjacent rough openings.
- Dimensions in parentheses are in millimeters.

Andersen® windows and patio doors make it easy to create a wide variety of combination designs

Combination Types

Ribbons

Ribbons are horizontal window combinations (vertical joins) where opposite ends (head and sill) of individual windows are fastened to the building structure.

Stacks

Stacks are vertical window combinations (horizontal joins) where opposite sides (both side jambs) of individual windows are fastened to the building structure.

Two basic configurations are used in combination designs: 1-way or 2-way configurations.

1-Way

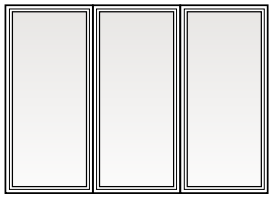

Ribbon Combination

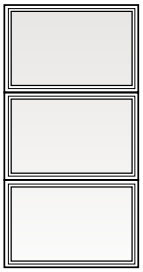

Stack Combination

2-Way

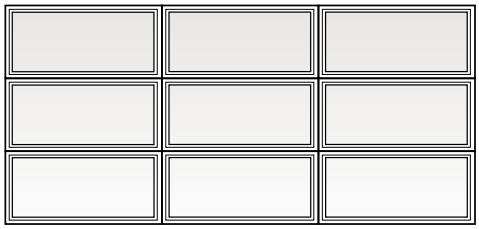

Multiple Ribbon/Stack Combination

2-way combinations exist when multiple vertical stacks and horizontal ribbons are joined together. Unlike 1-way combinations, the adjacent sides (head and sill, or both side jambs) of individual units are not necessarily fastened directly to the building structure. 2-way combinations are joined with both vertical and horizontal joining material, and may require reinforced joining materials and brackets depending on the local building code requirement for design wind load (measured in pounds per square foot, psf).

Determining Design Wind Load Performance

Proper combination design in conformance with local wind load requirements is vital to the success of your project. To make sure a combination is safe and that it complies with local building codes, the combination design wind load performance capacity must be determined.

Correctly determining this performance capacity involves the following three steps:

STEP 1

Determine Building Code Requirement

Make sure that you have the proper local codes and have identified specified compliance values. This calculated value (psf) will be used to determine if the combination will be acceptable (STEP 3).

STEP 2

Determine Product Performance

Compare product Design Pressure Rating data to the local building code (psf) requirement. This will show whether the individual units in a combination design are acceptable.

STEP 3

Determine Combination Performance

This step helps determine whether a given product, size, configuration and joining material type will meet the local building code design wind load requirement. To determine what joining material type to use (fiberglass, LVL, steel, aluminum or wood), compare the local building code design wind load requirement to the design wind load table value for a particular joining material on the following pages.

Andersen® Joining Materials

For a successful installation, one engineered to provide the required design pressure, it is important Andersen joining materials and installation accessories be specified by a project architect or contractor. For 1-way and 2-way combinations, Andersen offers joining materials to meet specified performance requirements. Combinations are joined using either fiberglass, steel or wood material depending on the product types. Each creates a joining system that enhances the look of Andersen products without sacrificing performance.

The addition of joining materials will affect the overall rough opening dimension; see page 222. **For all joining methods, read and follow product joining installation instructions in their entirety. Visit andersenwindows.com for instructions.**

A variety of exterior trim strips for finishing the space between joined products are available in colors to match Andersen windows and patio doors. Interior casing is available in several wood types, pre-finished options, sizes and style options. Components used with each joining system will vary depending on products being joined. Contact your Andersen supplier for more information.

Materials vary depending on type of units being joined and wind load requirements. Non-reinforced joining material is used to create alignment and positive joining between windows. Joining materials are not connected to the rough opening structure. Non-reinforced joins can also be achieved using accessory items such as V-notch gusset plates. Contact your Andersen supplier for specific performance and product recommendations.

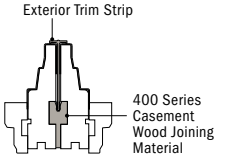

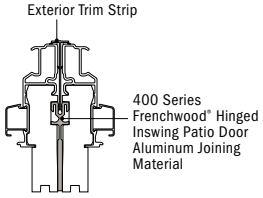

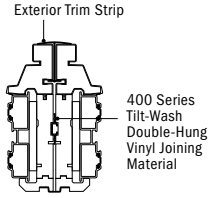

Reinforced joining materials are used to create product alignment, positive joining and load transfer between the Andersen windows and patio doors and the rough opening. They provide added strength capable of withstanding a greater range of wind load pressures. The structural performance of any combination is only as high as the lowest structural performance rating of any individual window or joining material in the combination.

Fiberglass Joining Material

Fiberglass joining material is available for 400 Series patio doors. The fiberglass joining material utilizes either 3/4" (19) x 5 3/4" (146) fiberglass interlocking joining plates for 4 9/16" (116) jamb depths or 3/4" (19) x 7 3/4" (197) fiberglass interlocking joining plates for higher performance for 1-way and 2-way joining, and is required for Frenchwood® hinged inswing patio doors with 6 9/16" (167) exterior extension jambs. Fiberglass reinforced joining kits are available for joining and installing patio door, sidelight and/or transom combinations at the job site. Extension jamb kits are also available. In some situations, joining material may prohibit the application of perimeter extension jambs. For more information, contact your Andersen supplier.

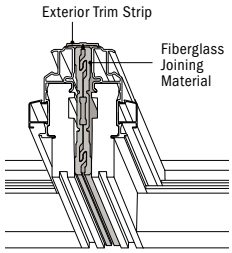

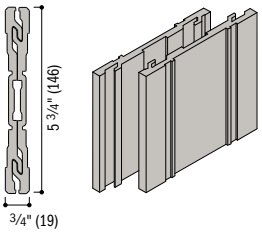

3/4" (19) x 5 3/4" (146)
Fiberglass Joining Material
For 4 9/16" (116) jamb depths.

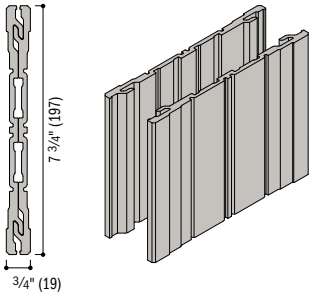

3/4" (19) x 7 3/4" (197)
Fiberglass Joining Material
For higher performance for 1-way and 2-way joining. Required for Frenchwood® hinged inswing patio doors with 6 9/16" (167) base jamb depths.

Laminated Veneer Lumber (LVL) Joining Material

Available in 3/4" (19) x 4 9/16" (116) and 3/4" (19) x 6 9/16" (167) sizes and includes an aluminum exterior trim strip retainer. Available in a variety of lengths up to 10' (3048). Use with casement, awning, double-hung and select specialty windows.

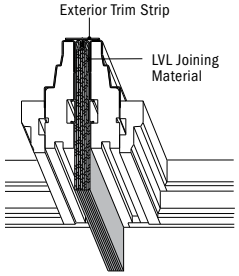

Steel Joining Material

Available in 8'-0 1/4" (2445), 9'-6" (2896) and 12'-6" (3810) lengths. Treated for corrosion resistance, a 4" (102) depth of material provides strength and rigidity. Adjacent windows attach to the steel joining material with screws. Use with casement, awning, double-hung, select specialty windows and patio doors.

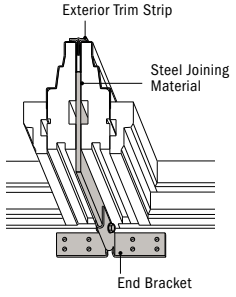

Aluminum Joining Material

Available in 6'-0 3/32" (1831) and 7'-8" (2337) lengths. High-quality aluminum provides increased stiffness and is anodized for corrosion resistance. Aluminum joining material stays within the basic jamb of the window so interior casing can be used without extension jambs. Adjacent windows attach to the aluminum joining material with screws. Use with casement, awning, select specialty windows and patio doors.

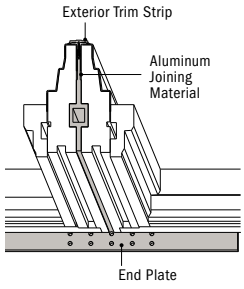

• Dimensions in parentheses are in millimeters.
• Structural performance of any combination is only as high as the lowest structural performance of any individual unit or joining material in the combination.

Casement and Awning Windows

1-Way Wood Joining

400 Series Casement, Awning, Picture, Transom and Complementary Specialty Windows Joined with Flexiframe® Windows

Average Adjacent Window Dimension											
(A + B) ÷ 2 = **12'-6"** (3810)	70	58	40	29	22						
(A + B) ÷ 2 = **12'-0"** (3658)	70	58	40	29	22						
(A + B) ÷ 2 = **11'-6"** (3505)	70	58	40	29	22						
(A + B) ÷ 2 = **11'-0"** (3353)	70	58	40	29	22						
(A + B) ÷ 2 = **10'-6"** (3200)	70	58	40	29	22						
(A + B) ÷ 2 = **10'-0"** (3048)	70	58	40	29	22						
(A + B) ÷ 2 = **9'-6"** (2896)	70	58	40	29	22						
(A + B) ÷ 2 = **9'-0"** (2743)	70	58	40	29	22						
(A + B) ÷ 2 = **8'-6"** (2591)	70	58	40	29	22						
(A + B) ÷ 2 = **8'-0"** (2438)	70	58	40	29	22						
(A + B) ÷ 2 = **7'-6"** (2286)	70	58	40	29	22						
(A + B) ÷ 2 = **7'-0"** (2134)	70	58	40	29	22						
(A + B) ÷ 2 = **6'-6"** (1981)	70	58	40	29	22						
(A + B) ÷ 2 = **6'-0"** (1829)	70	58	40	29	22						
(A + B) ÷ 2 = **5'-6"** (1676)	70	58	40	29	22						
(A + B) ÷ 2 = **5'-0"** (1524)	70	58	40	29	22						
(A + B) ÷ 2 = **4'-6"** (1372)	70	58	40	30	23						
(A + B) ÷ 2 = **4'-0"** (1219)	70	58	41	31	24	20					
(A + B) ÷ 2 = **3'-6"** (1067)	70	59	43	33	27	22					
(A + B) ÷ 2 = **3'-0"** (914)	70	63	47	37	30	25	21				
(A + B) ÷ 2 = **2'-6"** (762)	70	70	54	43	35	29	24	21			
(A + B) ÷ 2 = **2'-0"** (610)	70	70	65	52	42	35	30	26	22		
(A + B) ÷ 2 = **1'-6"** (457)	70	70	70	68	56	46	39	34	29	26	
C = (length of join)	**3'-6"** (1067)	**4'-0"** (1219)	**4'-6"** (1372)	**5'-0"** (1524)	**5'-6"** (1676)	**6'-0"** (1829)	**6'-6"** (1981)	**7'-0"** (2134)	**7'-6"** (2286)	**8'-0"** (2438)	

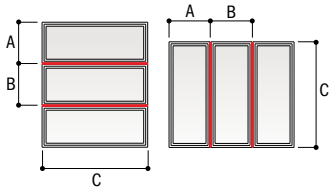

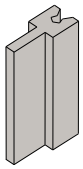

Wood Joining Material

Stacking of windows is allowed to a maximum height of 12'-6" (3810). Contact your Andersen supplier for information about taller combination heights.

1-Way Wood Joining

400 Series Casement, Awning, Picture, Transom and Complementary Specialty Windows

Average Adjacent Window Dimension											
(A + B) ÷ 2 = **12'-6"** (3810)	70	70	58	42	32	24	20				
(A + B) ÷ 2 = **12'-0"** (3658)	70	70	58	42	32	24	20				
(A + B) ÷ 2 = **11'-6"** (3505)	70	70	58	42	32	24	20				
(A + B) ÷ 2 = **11'-0"** (3353)	70	70	58	42	32	24	20				
(A + B) ÷ 2 = **10'-6"** (3200)	70	70	58	42	32	24	20				
(A + B) ÷ 2 = **10'-0"** (3048)	70	70	58	42	32	24	20				
(A + B) ÷ 2 = **9'-6"** (2896)	70	70	58	42	32	24	20				
(A + B) ÷ 2 = **9'-0"** (2743)	70	70	58	42	32	24	20				
(A + B) ÷ 2 = **8'-6"** (2591)	70	70	58	42	32	24	20				
(A + B) ÷ 2 = **8'-0"** (2438)	70	70	58	42	32	24	20				
(A + B) ÷ 2 = **7'-6"** (2286)	70	70	58	42	32	24	20				
(A + B) ÷ 2 = **7'-0"** (2134)	70	70	58	42	32	24	20				
(A + B) ÷ 2 = **6'-6"** (1981)	70	70	58	42	32	24	20				
(A + B) ÷ 2 = **6'-0"** (1829)	70	70	58	42	32	24	20				
(A + B) ÷ 2 = **5'-6"** (1676)	70	70	58	42	32	25	20				
(A + B) ÷ 2 = **5'-0"** (1524)	70	70	58	42	32	25	21				
(A + B) ÷ 2 = **4'-6"** (1372)	70	70	58	43	33	27	22				
(A + B) ÷ 2 = **4'-0"** (1219)	70	70	59	45	35	29	24	20			
(A + B) ÷ 2 = **3'-6"** (1067)	70	70	63	48	38	31	26	22			
(A + B) ÷ 2 = **3'-0"** (914)	70	70	68	54	43	36	30	25	22		
(A + B) ÷ 2 = **2'-6"** (762)	70	70	70	62	50	42	35	30	26	22	
(A + B) ÷ 2 = **2'-0"** (610)	70	70	70	70	61	51	43	37	32	27	
(A + B) ÷ 2 = **1'-6"** (457)	70	70	70	70	70	67	57	49	42	35	
C = (length of join)	**3'-6"** (1067)	**4'-0"** (1219)	**4'-6"** (1372)	**5'-0"** (1524)	**5'-6"** (1676)	**6'-0"** (1829)	**6'-6"** (1981)	**7'-0"** (2134)	**7'-6"** (2286)	**8'-0"** (2438)	

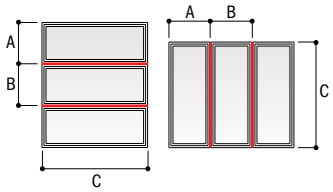

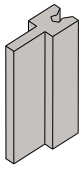

Wood Joining Material

Stacking of windows is allowed to a maximum height of 12'-6" (3810). Contact your Andersen supplier for information about taller combination heights.

- Numerical values in charts represent structural pressure only.
- Structural performance of any combination is only as high as the lowest structural performance of any individual unit or joining material in the combination.
- Andersen® products must be installed and anchored properly according to joining and installation instructions to meet rated structural performance. Refer to product joining and installation instructions at andersenwindows.com.
- Dimensions in parentheses are in millimeters.

COMBINATION DESIGNS

Casement and Awning Windows

2-Way Wood Joining

400 Series Casement, Awning, Picture, Transom, Flexiframe® and Complementary Specialty Windows

Average Adjacent Window Dimension	C = (length of join)								
(A + B) ÷ 2 = **8'-6"** (2591)	**3'-6"** (1067)	20							
(A + B) ÷ 2 = **8'-0"** (2438)	**4'-0"** (1219)	21							
(A + B) ÷ 2 = **7'-6"** (2286)	**4'-6"** (1372)	23							
(A + B) ÷ 2 = **7'-0"** (2134)	**5'-0"** (1524)	24							
(A + B) ÷ 2 = **6'-6"** (1981)	**5'-6"** (1676)	26	20						
(A + B) ÷ 2 = **6'-0"** (1829)	**6'-0"** (1829)	28	22						
(A + B) ÷ 2 = **5'-6"** (1676)	**6'-6"** (1981)	31	24						
(A + B) ÷ 2 = **5'-0"** (1524)	**7'-0"** (2134)	34	26	20					
(A + B) ÷ 2 = **4'-6"** (1372)	**7'-6"** (2286)	38	29	23					
(A + B) ÷ 2 = **4'-0"** (1219)		43	33	26	21				
(A + B) ÷ 2 = **3'-6"** (1067)		49	37	29	24				
(A + B) ÷ 2 = **3'-0"** (914)		57	44	34	28	23			
(A + B) ÷ 2 = **2'-6"** (762)		69	52	41	33	27	23		
(A + B) ÷ 2 = **2'-0"** (610)		70	66	52	42	34	29	23	
(A + B) ÷ 2 = **1'-6"** (457)		70	70	69	56	46	39	31	24	20

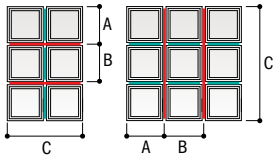

Red lines represent priority join (dimension C in table).

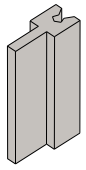

Wood Joining Material

1-Way or 2-Way Aluminum Joining

400 Series Casement, Awning, Picture, Transom, Flexiframe® and Complementary Specialty Windows

Average Adjacent Window Dimension	C = (length of join)								
(A + B) ÷ 2 = **9'-0"** (2743)	**4'-0"** (1219)	70	56	41	31	23			
(A + B) ÷ 2 = **8'-6"** (2591)	**4'-6"** (1372)	70	60	43	32	25			
(A + B) ÷ 2 = **8'-0"** (2438)	**5'-0"** (1524)	70	63	46	34	26	21		
(A + B) ÷ 2 = **7'-6"** (2286)	**5'-6"** (1676)	70	67	49	36	28	22		
(A + B) ÷ 2 = **7'-0"** (2134)	**6'-0"** (1829)	70	70	52	39	30	23		
(A + B) ÷ 2 = **6'-6"** (1981)	**6'-6"** (1981)	70	70	56	42	32	25	20	
(A + B) ÷ 2 = **6'-0"** (1829)	**7'-0"** (2134)	70	70	60	45	35	27	21	
(A + B) ÷ 2 = **5'-6"** (1676)	**7'-6"** (2286)	70	70	66	49	38	29	23	
(A + B) ÷ 2 = **5'-0"** (1524)		70	70	70	54	41	32	26	21
(A + B) ÷ 2 = **4'-6"** (1372)		70	70	70	59	45	35	28	23
(A + B) ÷ 2 = **4'-0"** (1219)		70	70	70	66	50	39	31	25
(A + B) ÷ 2 = **3'-6"** (1067)		70	70	70	70	57	44	35	28
(A + B) ÷ 2 = **3'-0"** (914)		70	70	70	70	65	51	40	33
(A + B) ÷ 2 = **2'-6"** (762)		70	70	70	70	70	60	48	39
(A + B) ÷ 2 = **2'-0"** (610)		70	70	70	70	70	70	59	48
(A + B) ÷ 2 = **1'-6"** (457)		70	70	70	70	70	70	70	63

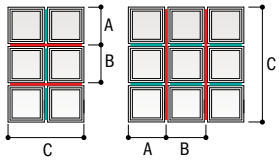

Red lines represent priority join (dimension C in table).



Aluminum Joining Material

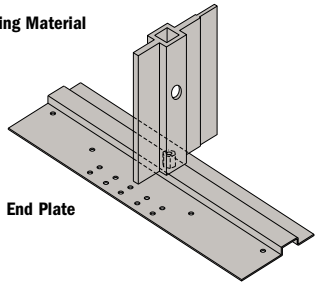

End Plate

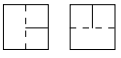

For a join with a continuous jamb on one side, multiply psf by 1.2.

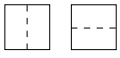

For a join with a continuous jamb on both sides, multiply psf by 1.4.

- Numerical values in charts represent structural pressure only.
- Structural performance of any combination is only as high as the lowest structural performance of any individual unit or joining material in the combination.
- Andersen® products must be installed and anchored properly according to joining and installation instructions to meet rated structural performance. Refer to product joining and installation instructions at andersenwindows.com.
- Dimensions in parentheses are in millimeters.

Casement and Awning Windows

1-Way or 2-Way Steel Joining

400 Series Casement, Awning, Picture, Transom, Flexiframe® and Complementary Specialty Windows

Average Adjacent Window Dimension	C = (length of join)	3'-0" (914)	3'-6" (1067)	4'-0" (1219)	4'-6" (1372)	5'-0" (1524)	5'-6" (1676)	6'-0" (1829)	6'-6" (1981)	7'-0" (2134)	7'-6" (2286)	8'-0" (2438)	8'-6" (2591)	9'-0" (2743)	9'-6" (2896)	10'-0" (3048)	10'-6" (3200)	11'-0" (3353)	11'-6" (3505)	12'-0" (3658)	12'-6" (3810)
(A + B) ÷ 2 = **12'-6"** (3810)		50	37	28	22																
(A + B) ÷ 2 = **12'-0"** (3658)		52	38	29	23																
(A + B) ÷ 2 = **11'-6"** (3505)		54	40	30	24																
(A + B) ÷ 2 = **11'-0"** (3353)		57	42	32	25	20															
(A + B) ÷ 2 = **10'-6"** (3200)		59	44	33	26	21															
(A + B) ÷ 2 = **10'-0"** (3048)		62	46	35	28	22															
(A + B) ÷ 2 = **9'-6"** (2896)		66	48	37	29	24															
(A + B) ÷ 2 = **9'-0"** (2743)		69	51	39	31	25	21														
(A + B) ÷ 2 = **8'-6"** (2591)		70	54	41	33	26	22														
(A + B) ÷ 2 = **8'-0"** (2438)		70	57	44	35	28	23														
(A + B) ÷ 2 = **7'-6"** (2286)		70	61	47	37	30	25	21													
(A + B) ÷ 2 = **7'-0"** (2134)		70	66	50	40	32	26	22													
(A + B) ÷ 2 = **6'-6"** (1981)		70	70	54	43	34	28	24	20												
(A + B) ÷ 2 = **6'-0"** (1829)		70	70	58	46	37	31	26	22												
(A + B) ÷ 2 = **5'-6"** (1676)		70	70	64	50	41	34	28	24	21											
(A + B) ÷ 2 = **5'-0"** (1524)		70	70	70	55	45	37	31	27	23	20										
(A + B) ÷ 2 = **4'-6"** (1372)		70	70	70	62	50	41	35	30	26	22										
(A + B) ÷ 2 = **4'-0"** (1219)		70	70	70	69	56	46	39	33	29	25	22									
(A + B) ÷ 2 = **3'-6"** (1067)		70	70	70	70	64	53	45	38	33	28	25	22								
(A + B) ÷ 2 = **3'-0"** (914)		70	70	70	70	70	62	52	44	38	33	29	26	23	21						
(A + B) ÷ 2 = **2'-6"** (762)		70	70	70	70	70	70	62	53	46	40	35	31	28	25	22	20				
(A + B) ÷ 2 = **2'-0"** (610)		70	70	70	70	70	70	70	66	57	50	44	39	35	31	28	26	23	21		
(A + B) ÷ 2 = **1'-6"** (457)		70	70	70	70	70	70	70	70	70	66	58	52	46	42	37	34	31	28	25	24

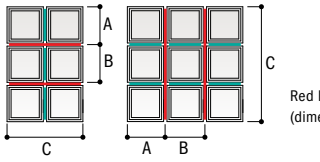

Red lines represent priority join (dimension C in table).

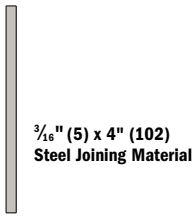

3/16" (5) x 4" (102) Steel Joining Material

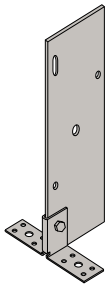

End Bracket



For a join with a continuous jamb on one side, multiply psf by 1.2.



For a join with a continuous jamb on both sides, multiply psf by 1.4.

- Numerical values in charts represent structural pressure only.
- Structural performance of any combination is only as high as the lowest structural performance of any individual unit or joining material in the combination.
- Andersen® products must be installed and anchored properly according to joining and installation instructions to meet rated structural performance. Refer to product joining and installation instructions at andersenwindows.com.
- Dimensions in parentheses are in millimeters.

COMBINATION DESIGNS

Casement and Awning Windows

1-Way LVL Joining

400 Series Casement, Awning, Picture, Transom, Flexiframe® and Complementary Specialty Windows

4 9/16" (116) Minimum Wall Depth

Average Adjacent Window Dim.								
(A + B) ÷ 2 = **6'-0"** (1829)	70	70	56	45				
(A + B) ÷ 2 = **5'-6"** (1676)	70	70	61	50				
(A + B) ÷ 2 = **5'-0"** (1524)	70	70	68	55	45	36		
(A + B) ÷ 2 = **4'-6"** (1372)	70	70	70	61	51	43	37	
(A + B) ÷ 2 = **4'-0"** (1219)	70	70	70	70	58	49	42	35
(A + B) ÷ 2 = **3'-6"** (1067)	70	70	70	70	68	56	49	39
(A + B) ÷ 2 = **3'-0"** (914)	70	70	70	70	70	63	53	45
(A + B) ÷ 2 = **2'-6"** (762)	70	70	70	70	70	70	62	53
(A + B) ÷ 2 = **2'-0"** (610)	70	70	70	70	70	70	62	53
(A + B) ÷ 2 = **1'-6"** (457)	70	70	70	70	70	70	62	53
C = (length of join)	**3'-6"** (1067)	**4'-0"** (1219)	**4'-6"** (1372)	**5'-0"** (1524)	**5'-6"** (1676)	**6'-0"** (1829)	**6'-0"** (1981)	**7'-0"** (2134)

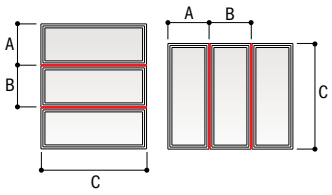

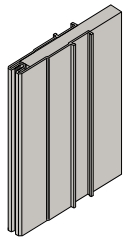

¾" (19) x 5 ¾" (146) LVL Joining Material
For 4 9/16" (116) jamb depths.

2-Way LVL Joining

400 Series Casement, Awning, Picture, Transom, Flexiframe® and Complementary Specialty Windows

4 9/16" (116) Minimum Wall Depth

Average Adjacent Window Dim.								
(A + B) ÷ 2 = **6'-0"** (1829)	65	65	51	41				
(A + B) ÷ 2 = **5'-6"** (1676)	70	70	56	45				
(A + B) ÷ 2 = **5'-0"** (1524)	70	70	62	50	41	34		
(A + B) ÷ 2 = **4'-6"** (1372)	70	70	68	55	46	38	33	
(A + B) ÷ 2 = **4'-0"** (1219)	70	70	70	62	51	43	37	32
(A + B) ÷ 2 = **3'-6"** (1067)	70	70	70	70	59	49	42	36
(A + B) ÷ 2 = **3'-0"** (914)	70	70	70	70	69	58	49	42
(A + B) ÷ 2 = **2'-6"** (762)	70	70	70	70	70	69	59	51
(A + B) ÷ 2 = **2'-0"** (610)	70	70	70	70	61	69	59	51
(A + B) ÷ 2 = **1'-6"** (457)	70	70	70	70	61	69	59	51
C = (length of join)	**3'-6"** (1067)	**4'-0"** (1219)	**4'-6"** (1372)	**5'-0"** (1524)	**5'-6"** (1676)	**6'-0"** (1829)	**6'-0"** (1981)	**7'-0"** (2134)

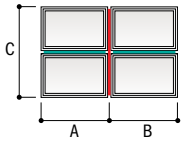

Red lines represent priority join (dimension C in table).

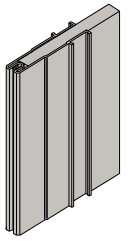

¾" (19) x 5 ¾" (146) LVL Joining Material
For 4 9/16" (116) jamb depths.

6 9/16" (167) Minimum Wall Depth

Average Adjacent Window Dimension									
(A + B) ÷ 2 = **10'-0"** (3048)	70	70	63	56	48	44	37	31	24
(A + B) ÷ 2 = **9'-6"** (2896)	70	70	63	56	48	44	37	31	24
(A + B) ÷ 2 = **9'-0"** (2743)	70	70	63	56	48	44	37	31	24
(A + B) ÷ 2 = **8'-6"** (2591)	70	70	63	56	48	44	37	31	25
(A + B) ÷ 2 = **8'-0"** (2438)	70	70	63	56	48	44	37	31	25
(A + B) ÷ 2 = **7'-6"** (2286)	70	70	63	56	48	44	38	32	26
(A + B) ÷ 2 = **7'-0"** (2134)	70	70	63	56	49	45	39	33	26
(A + B) ÷ 2 = **6'-6"** (1981)	70	70	63	57	50	46	40	34	28
(A + B) ÷ 2 = **6'-0"** (1829)	70	70	64	58	51	47	41	35	29
(A + B) ÷ 2 = **5'-6"** (1676)	70	70	66	60	54	50	44	37	30
(A + B) ÷ 2 = **5'-0"** (1524)	70	70	68	63	56	52	46	39	32
(A + B) ÷ 2 = **4'-6"** (1372)	70	70	70	67	60	56	50	43	35
(A + B) ÷ 2 = **4'-0"** (1219)	70	70	70	70	64	60	53	46	38
(A + B) ÷ 2 = **3'-6"** (1067)	70	70	70	70	70	67	60	52	42
(A + B) ÷ 2 = **3'-0"** (914)	70	70	70	70	70	70	66	57	47
(A + B) ÷ 2 = **2'-6"** (762)	70	70	70	70	70	70	70	68	56
(A + B) ÷ 2 = **2'-0"** (610)	70	70	70	70	70	70	70	70	66
(A + B) ÷ 2 = **1'-6"** (457)	70	70	70	70	70	70	70	70	70
C = (length of join)	**6'-0"** (1829) **or less**	**6'-6"** (1981)	**7'-0"** (2134)	**7'-6"** (2286)	**8'-0"** (2438)	**8'-6"** (2591)	**9'-0"** (2743)	**9'-6"** (2896)	**10'-0"** (3048)

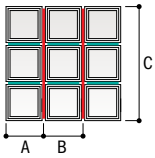

Red lines represent priority join (dimension C in table).

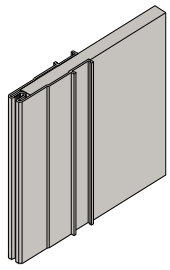

¾" (19) x 7 ¾" (197) LVL Joining Material
For 6 9/16" (167) jamb depths.

2-way joining must be assembled on the job site within the rough opening.

- Numerical values in charts represent structural pressure only.
- Structural performance of any combination is only as high as the lowest structural performance of any individual unit or joining material in the combination.
- Andersen® products must be installed and anchored properly according to joining and installation instructions to meet rated structural performance. Refer to product joining and installation instructions at andersenwindows.com.
- Dimensions in parentheses are in millimeters.

Double-Hung Windows

1-Way Joining With Joining Brackets

400 Series Woodwright® and Tilt-Wash Double-Hung, Picture and Transom Insert Windows

Average Adjacent Window Dimension	C = (length of join)
(A + B) ÷ 2 = **12'-0"** (3658)	50
(A + B) ÷ 2 = **11'-0"** (3353)	50
(A + B) ÷ 2 = **10'-0"** (3048)	50
(A + B) ÷ 2 = **9'-0"** (2743)	50
(A + B) ÷ 2 = **8'-0"** (2438)	50
(A + B) ÷ 2 = **7'-0"** (2134)	50
(A + B) ÷ 2 = **6'-0"** (1829)	50
(A + B) ÷ 2 = **5'-0"** (1524)	50
(A + B) ÷ 2 = **4'-0"** (1219)	50
(A + B) ÷ 2 = **3'-0"** (914)	50
(A + B) ÷ 2 = **2'-0"** (610)	50
	3'-6" (1067) **or less**

Average Adjacent Window Dimension	C = (length of join)
(A + B) ÷ 2 = **12'-0"** (3658)	34
(A + B) ÷ 2 = **11'-0"** (3353)	34
(A + B) ÷ 2 = **10'-0"** (3048)	34
(A + B) ÷ 2 = **9'-0"** (2743)	34
(A + B) ÷ 2 = **8'-0"** (2438)	34
(A + B) ÷ 2 = **7'-0"** (2134)	35
(A + B) ÷ 2 = **6'-0"** (1829)	38
(A + B) ÷ 2 = **5'-0"** (1524)	42
(A + B) ÷ 2 = **4'-0"** (1219)	50
(A + B) ÷ 2 = **3'-0"** (914)	50
(A + B) ÷ 2 = **2'-0"** (610)	50
	4'-0" (1219)

Average Adjacent Window Dimension	C = (length of join)
(A + B) ÷ 2 = **12'-0"** (3658)	24
(A + B) ÷ 2 = **11'-0"** (3353)	24
(A + B) ÷ 2 = **10'-0"** (3048)	24
(A + B) ÷ 2 = **9'-0"** (2743)	24
(A + B) ÷ 2 = **8'-0"** (2438)	25
(A + B) ÷ 2 = **7'-0"** (2134)	26
(A + B) ÷ 2 = **6'-0"** (1829)	28
(A + B) ÷ 2 = **5'-0"** (1524)	32
(A + B) ÷ 2 = **4'-0"** (1219)	39
(A + B) ÷ 2 = **3'-0"** (914)	50
(A + B) ÷ 2 = **2'-0"** (610)	50
	4'-6" (1372)

Average Adjacent Window Dimension	C = (length of join)
(A + B) ÷ 2 = **12'-0"** (3658)	18
(A + B) ÷ 2 = **11'-0"** (3353)	18
(A + B) ÷ 2 = **10'-0"** (3048)	18
(A + B) ÷ 2 = **9'-0"** (2743)	18
(A + B) ÷ 2 = **8'-0"** (2438)	19
(A + B) ÷ 2 = **7'-0"** (2134)	20
(A + B) ÷ 2 = **6'-0"** (1829)	22
(A + B) ÷ 2 = **5'-0"** (1524)	26
(A + B) ÷ 2 = **4'-0"** (1219)	31
(A + B) ÷ 2 = **3'-0"** (914)	40
(A + B) ÷ 2 = **2'-0"** (610)	50
	5'-0" (1524)

Average Adjacent Window Dimension	C = (length of join)
(A + B) ÷ 2 = **12'-0"** (3658)	
(A + B) ÷ 2 = **11'-0"** (3353)	
(A + B) ÷ 2 = **10'-0"** (3048)	
(A + B) ÷ 2 = **9'-0"** (2743)	
(A + B) ÷ 2 = **8'-0"** (2438)	15
(A + B) ÷ 2 = **7'-0"** (2134)	16
(A + B) ÷ 2 = **6'-0"** (1829)	18
(A + B) ÷ 2 = **5'-0"** (1524)	21
(A + B) ÷ 2 = **4'-0"** (1219)	25
(A + B) ÷ 2 = **3'-0"** (914)	33
(A + B) ÷ 2 = **2'-0"** (610)	49
	5'-6" (1676)

Average Adjacent Window Dimension	C = (length of join)
(A + B) ÷ 2 = **12'-0"** (3658)	
(A + B) ÷ 2 = **11'-0"** (3353)	
(A + B) ÷ 2 = **10'-0"** (3048)	
(A + B) ÷ 2 = **9'-0"** (2743)	
(A + B) ÷ 2 = **8'-0"** (2438)	
(A + B) ÷ 2 = **7'-0"** (2134)	
(A + B) ÷ 2 = **6'-0"** (1829)	15
(A + B) ÷ 2 = **5'-0"** (1524)	17
(A + B) ÷ 2 = **4'-0"** (1219)	21
(A + B) ÷ 2 = **3'-0"** (914)	28
(A + B) ÷ 2 = **2'-0"** (610)	41
	6'-0" (1829)

Average Adjacent Window Dimension	C = (length of join)
(A + B) ÷ 2 = **12'-0"** (3658)	
(A + B) ÷ 2 = **11'-0"** (3353)	
(A + B) ÷ 2 = **10'-0"** (3048)	
(A + B) ÷ 2 = **9'-0"** (2743)	
(A + B) ÷ 2 = **8'-0"** (2438)	
(A + B) ÷ 2 = **7'-0"** (2134)	
(A + B) ÷ 2 = **6'-0"** (1829)	
(A + B) ÷ 2 = **5'-0"** (1524)	
(A + B) ÷ 2 = **4'-0"** (1219)	17
(A + B) ÷ 2 = **3'-0"** (914)	23
(A + B) ÷ 2 = **2'-0"** (610)	34
	6'-6" (1981)

Average Adjacent Window Dimension	C = (length of join)
(A + B) ÷ 2 = **12'-0"** (3658)	
(A + B) ÷ 2 = **11'-0"** (3353)	
(A + B) ÷ 2 = **10'-0"** (3048)	
(A + B) ÷ 2 = **9'-0"** (2743)	
(A + B) ÷ 2 = **8'-0"** (2438)	
(A + B) ÷ 2 = **7'-0"** (2134)	
(A + B) ÷ 2 = **6'-0"** (1829)	
(A + B) ÷ 2 = **5'-0"** (1524)	
(A + B) ÷ 2 = **4'-0"** (1219)	
(A + B) ÷ 2 = **3'-0"** (914)	18
(A + B) ÷ 2 = **2'-0"** (610)	27
	7'-0" (2134)

Average Adjacent Window Dimension	C = (length of join)
(A + B) ÷ 2 = **12'-0"** (3658)	
(A + B) ÷ 2 = **11'-0"** (3353)	
(A + B) ÷ 2 = **10'-0"** (3048)	
(A + B) ÷ 2 = **9'-0"** (2743)	
(A + B) ÷ 2 = **8'-0"** (2438)	
(A + B) ÷ 2 = **7'-0"** (2134)	
(A + B) ÷ 2 = **6'-0"** (1829)	
(A + B) ÷ 2 = **5'-0"** (1524)	
(A + B) ÷ 2 = **4'-0"** (1219)	
(A + B) ÷ 2 = **3'-0"** (914)	15
(A + B) ÷ 2 = **2'-0"** (610)	22
	7'-6" (2286)

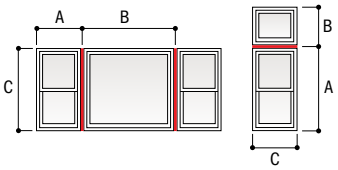

Only 1-way combinations similar to those shown above are allowed.

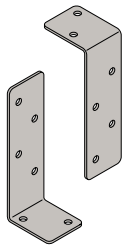

Joining Brackets

Joining brackets are used at the ends of each join to attach units to the opening.

1-Way Vinyl Joining

400 Series Woodwright® and Tilt-Wash Double-Hung, Picture and Transom Full-Frame Windows

Average Adjacent Window Dimension	C = (length of join)
(A + B) ÷ 2 = **12'-6"** (3810)	50
(A + B) ÷ 2 = **12'-0"** (3658)	50
(A + B) ÷ 2 = **11'-6"** (3505)	50
(A + B) ÷ 2 = **11'-0"** (3353)	50
(A + B) ÷ 2 = **10'-6"** (3200)	50
(A + B) ÷ 2 = **10'-0"** (3048)	50
(A + B) ÷ 2 = **9'-6"** (2896)	50
(A + B) ÷ 2 = **9'-0"** (2743)	50
(A + B) ÷ 2 = **8'-6"** (2591)	50
(A + B) ÷ 2 = **8'-0"** (2438)	50
(A + B) ÷ 2 = **7'-6"** (2286)	50
(A + B) ÷ 2 = **7'-0"** (2134)	50
(A + B) ÷ 2 = **6'-6"** (1981)	50
(A + B) ÷ 2 = **6'-0"** (1829)	50
(A + B) ÷ 2 = **5'-6"** (1676)	50
(A + B) ÷ 2 = **5'-0"** (1524)	50
(A + B) ÷ 2 = **4'-6"** (1372)	50
(A + B) ÷ 2 = **4'-0"** (1219)	50
(A + B) ÷ 2 = **3'-6"** (1067)	50
(A + B) ÷ 2 = **3'-0"** (914)	50
(A + B) ÷ 2 = **2'-6"** (762)	50
(A + B) ÷ 2 = **2'-0"** (610)	50
(A + B) ÷ 2 = **1'-6"** (457)	50
	4'-0" (1219) **or less**

Average Adjacent Window Dimension	C = (length of join)
(A + B) ÷ 2 = **12'-6"** (3810)	42
(A + B) ÷ 2 = **12'-0"** (3658)	42
(A + B) ÷ 2 = **11'-6"** (3505)	42
(A + B) ÷ 2 = **11'-0"** (3353)	42
(A + B) ÷ 2 = **10'-6"** (3200)	42
(A + B) ÷ 2 = **10'-0"** (3048)	42
(A + B) ÷ 2 = **9'-6"** (2896)	42
(A + B) ÷ 2 = **9'-0"** (2743)	42
(A + B) ÷ 2 = **8'-6"** (2591)	42
(A + B) ÷ 2 = **8'-0"** (2438)	42
(A + B) ÷ 2 = **7'-6"** (2286)	42
(A + B) ÷ 2 = **7'-0"** (2134)	42
(A + B) ÷ 2 = **6'-6"** (1981)	42
(A + B) ÷ 2 = **6'-0"** (1829)	42
(A + B) ÷ 2 = **5'-6"** (1676)	42
(A + B) ÷ 2 = **5'-0"** (1524)	42
(A + B) ÷ 2 = **4'-6"** (1372)	42
(A + B) ÷ 2 = **4'-0"** (1219)	42
(A + B) ÷ 2 = **3'-6"** (1067)	44
(A + B) ÷ 2 = **3'-0"** (914)	47
(A + B) ÷ 2 = **2'-6"** (762)	50
(A + B) ÷ 2 = **2'-0"** (610)	50
(A + B) ÷ 2 = **1'-6"** (457)	50
	4'-6" (1372)

Average Adjacent Window Dimension	C = (length of join)
(A + B) ÷ 2 = **12'-6"** (3810)	33
(A + B) ÷ 2 = **12'-0"** (3658)	33
(A + B) ÷ 2 = **11'-6"** (3505)	33
(A + B) ÷ 2 = **11'-0"** (3353)	33
(A + B) ÷ 2 = **10'-6"** (3200)	33
(A + B) ÷ 2 = **10'-0"** (3048)	33
(A + B) ÷ 2 = **9'-6"** (2896)	33
(A + B) ÷ 2 = **9'-0"** (2743)	33
(A + B) ÷ 2 = **8'-6"** (2591)	33
(A + B) ÷ 2 = **8'-0"** (2438)	33
(A + B) ÷ 2 = **7'-6"** (2286)	33
(A + B) ÷ 2 = **7'-0"** (2134)	33
(A + B) ÷ 2 = **6'-6"** (1981)	33
(A + B) ÷ 2 = **6'-0"** (1829)	33
(A + B) ÷ 2 = **5'-6"** (1676)	33
(A + B) ÷ 2 = **5'-0"** (1524)	33
(A + B) ÷ 2 = **4'-6"** (1372)	33
(A + B) ÷ 2 = **4'-0"** (1219)	34
(A + B) ÷ 2 = **3'-6"** (1067)	37
(A + B) ÷ 2 = **3'-0"** (914)	39
(A + B) ÷ 2 = **2'-6"** (762)	44
(A + B) ÷ 2 = **2'-0"** (610)	50
(A + B) ÷ 2 = **1'-6"** (457)	50
	5'-0" (1524)

Average Adjacent Window Dimension	C = (length of join)
(A + B) ÷ 2 = **12'-6"** (3810)	28
(A + B) ÷ 2 = **12'-0"** (3658)	28
(A + B) ÷ 2 = **11'-6"** (3505)	28
(A + B) ÷ 2 = **11'-0"** (3353)	28
(A + B) ÷ 2 = **10'-6"** (3200)	28
(A + B) ÷ 2 = **10'-0"** (3048)	28
(A + B) ÷ 2 = **9'-6"** (2896)	28
(A + B) ÷ 2 = **9'-0"** (2743)	28
(A + B) ÷ 2 = **8'-6"** (2591)	28
(A + B) ÷ 2 = **8'-0"** (2438)	28
(A + B) ÷ 2 = **7'-6"** (2286)	28
(A + B) ÷ 2 = **7'-0"** (2134)	28
(A + B) ÷ 2 = **6'-6"** (1981)	28
(A + B) ÷ 2 = **6'-0"** (1829)	28
(A + B) ÷ 2 = **5'-6"** (1676)	28
(A + B) ÷ 2 = **5'-0"** (1524)	28
(A + B) ÷ 2 = **4'-6"** (1372)	29
(A + B) ÷ 2 = **4'-0"** (1219)	30
(A + B) ÷ 2 = **3'-6"** (1067)	32
(A + B) ÷ 2 = **3'-0"** (914)	35
(A + B) ÷ 2 = **2'-6"** (762)	40
(A + B) ÷ 2 = **2'-0"** (610)	46
(A + B) ÷ 2 = **1'-6"** (457)	50
	5'-6" (1676)

Average Adjacent Window Dimension	C = (length of join)
(A + B) ÷ 2 = **12'-6"** (3810)	23
(A + B) ÷ 2 = **12'-0"** (3658)	23
(A + B) ÷ 2 = **11'-6"** (3505)	23
(A + B) ÷ 2 = **11'-0"** (3353)	23
(A + B) ÷ 2 = **10'-6"** (3200)	23
(A + B) ÷ 2 = **10'-0"** (3048)	23
(A + B) ÷ 2 = **9'-6"** (2896)	23
(A + B) ÷ 2 = **9'-0"** (2743)	23
(A + B) ÷ 2 = **8'-6"** (2591)	23
(A + B) ÷ 2 = **8'-0"** (2438)	23
(A + B) ÷ 2 = **7'-6"** (2286)	23
(A + B) ÷ 2 = **7'-0"** (2134)	23
(A + B) ÷ 2 = **6'-6"** (1981)	23
(A + B) ÷ 2 = **6'-0"** (1829)	23
(A + B) ÷ 2 = **5'-6"** (1676)	23
(A + B) ÷ 2 = **5'-0"** (1524)	24
(A + B) ÷ 2 = **4'-6"** (1372)	25
(A + B) ÷ 2 = **4'-0"** (1219)	26
(A + B) ÷ 2 = **3'-6"** (1067)	28
(A + B) ÷ 2 = **3'-0"** (914)	30
(A + B) ÷ 2 = **2'-6"** (762)	35
(A + B) ÷ 2 = **2'-0"** (610)	41
(A + B) ÷ 2 = **1'-6"** (457)	50
	6'-0" (1829)

Average Adjacent Window Dimension	C = (length of join)
(A + B) ÷ 2 = **12'-6"** (3810)	20
(A + B) ÷ 2 = **12'-0"** (3658)	20
(A + B) ÷ 2 = **11'-6"** (3505)	20
(A + B) ÷ 2 = **11'-0"** (3353)	20
(A + B) ÷ 2 = **10'-6"** (3200)	20
(A + B) ÷ 2 = **10'-0"** (3048)	20
(A + B) ÷ 2 = **9'-6"** (2896)	20
(A + B) ÷ 2 = **9'-0"** (2743)	20
(A + B) ÷ 2 = **8'-6"** (2591)	20
(A + B) ÷ 2 = **8'-0"** (2438)	20
(A + B) ÷ 2 = **7'-6"** (2286)	20
(A + B) ÷ 2 = **7'-0"** (2134)	20
(A + B) ÷ 2 = **6'-6"** (1981)	20
(A + B) ÷ 2 = **6'-0"** (1829)	20
(A + B) ÷ 2 = **5'-6"** (1676)	21
(A + B) ÷ 2 = **5'-0"** (1524)	21
(A + B) ÷ 2 = **4'-6"** (1372)	22
(A + B) ÷ 2 = **4'-0"** (1219)	23
(A + B) ÷ 2 = **3'-6"** (1067)	26
(A + B) ÷ 2 = **3'-0"** (914)	28
(A + B) ÷ 2 = **2'-6"** (762)	32
(A + B) ÷ 2 = **2'-0"** (610)	37
(A + B) ÷ 2 = **1'-6"** (457)	49
	6'-6" (1981)

Average Adjacent Window Dimension	C = (length of join)
(A + B) ÷ 2 = **12'-6"** (3810)	
(A + B) ÷ 2 = **12'-0"** (3658)	
(A + B) ÷ 2 = **11'-6"** (3505)	
(A + B) ÷ 2 = **11'-0"** (3353)	
(A + B) ÷ 2 = **10'-6"** (3200)	
(A + B) ÷ 2 = **10'-0"** (3048)	
(A + B) ÷ 2 = **9'-6"** (2896)	
(A + B) ÷ 2 = **9'-0"** (2743)	
(A + B) ÷ 2 = **8'-6"** (2591)	
(A + B) ÷ 2 = **8'-0"** (2438)	
(A + B) ÷ 2 = **7'-6"** (2286)	
(A + B) ÷ 2 = **7'-0"** (2134)	
(A + B) ÷ 2 = **6'-6"** (1981)	
(A + B) ÷ 2 = **6'-0"** (1829)	
(A + B) ÷ 2 = **5'-6"** (1676)	
(A + B) ÷ 2 = **5'-0"** (1524)	
(A + B) ÷ 2 = **4'-6"** (1372)	20
(A + B) ÷ 2 = **4'-0"** (1219)	21
(A + B) ÷ 2 = **3'-6"** (1067)	23
(A + B) ÷ 2 = **3'-0"** (914)	25
(A + B) ÷ 2 = **2'-6"** (762)	29
(A + B) ÷ 2 = **2'-0"** (610)	34
(A + B) ÷ 2 = **1'-6"** (457)	45
	7'-0" (2134)

Average Adjacent Window Dimension	C = (length of join)
(A + B) ÷ 2 = **12'-6"** (3810)	
(A + B) ÷ 2 = **12'-0"** (3658)	
(A + B) ÷ 2 = **11'-6"** (3505)	
(A + B) ÷ 2 = **11'-0"** (3353)	
(A + B) ÷ 2 = **10'-6"** (3200)	
(A + B) ÷ 2 = **10'-0"** (3048)	
(A + B) ÷ 2 = **9'-6"** (2896)	
(A + B) ÷ 2 = **9'-0"** (2743)	
(A + B) ÷ 2 = **8'-6"** (2591)	
(A + B) ÷ 2 = **8'-0"** (2438)	
(A + B) ÷ 2 = **7'-6"** (2286)	
(A + B) ÷ 2 = **7'-0"** (2134)	
(A + B) ÷ 2 = **6'-6"** (1981)	
(A + B) ÷ 2 = **6'-0"** (1829)	
(A + B) ÷ 2 = **5'-6"** (1676)	
(A + B) ÷ 2 = **5'-0"** (1524)	
(A + B) ÷ 2 = **4'-6"** (1372)	
(A + B) ÷ 2 = **4'-0"** (1219)	
(A + B) ÷ 2 = **3'-6"** (1067)	21
(A + B) ÷ 2 = **3'-0"** (914)	23
(A + B) ÷ 2 = **2'-6"** (762)	27
(A + B) ÷ 2 = **2'-0"** (610)	32
(A + B) ÷ 2 = **1'-6"** (457)	42
	7'-6" (2286)

Average Adjacent Window Dimension	C = (length of join)
(A + B) ÷ 2 = **12'-6"** (3810)	
(A + B) ÷ 2 = **12'-0"** (3658)	
(A + B) ÷ 2 = **11'-6"** (3505)	
(A + B) ÷ 2 = **11'-0"** (3353)	
(A + B) ÷ 2 = **10'-6"** (3200)	
(A + B) ÷ 2 = **10'-0"** (3048)	
(A + B) ÷ 2 = **9'-6"** (2896)	
(A + B) ÷ 2 = **9'-0"** (2743)	
(A + B) ÷ 2 = **8'-6"** (2591)	
(A + B) ÷ 2 = **8'-0"** (2438)	
(A + B) ÷ 2 = **7'-6"** (2286)	
(A + B) ÷ 2 = **7'-0"** (2134)	
(A + B) ÷ 2 = **6'-6"** (1981)	
(A + B) ÷ 2 = **6'-0"** (1829)	
(A + B) ÷ 2 = **5'-6"** (1676)	
(A + B) ÷ 2 = **5'-0"** (1524)	
(A + B) ÷ 2 = **4'-6"** (1372)	
(A + B) ÷ 2 = **4'-0"** (1219)	
(A + B) ÷ 2 = **3'-6"** (1067)	
(A + B) ÷ 2 = **3'-0"** (914)	20
(A + B) ÷ 2 = **2'-6"** (762)	24
(A + B) ÷ 2 = **2'-0"** (610)	37
(A + B) ÷ 2 = **1'-6"** (457)	49
	8'-0" (2438)

Average Adjacent Window Dimension	C = (length of join)
(A + B) ÷ 2 = **12'-6"** (3810)	
(A + B) ÷ 2 = **12'-0"** (3658)	
(A + B) ÷ 2 = **11'-6"** (3505)	
(A + B) ÷ 2 = **11'-0"** (3353)	
(A + B) ÷ 2 = **10'-6"** (3200)	
(A + B) ÷ 2 = **10'-0"** (3048)	
(A + B) ÷ 2 = **9'-6"** (2896)	
(A + B) ÷ 2 = **9'-0"** (2743)	
(A + B) ÷ 2 = **8'-6"** (2591)	
(A + B) ÷ 2 = **8'-0"** (2438)	
(A + B) ÷ 2 = **7'-6"** (2286)	
(A + B) ÷ 2 = **7'-0"** (2134)	
(A + B) ÷ 2 = **6'-6"** (1981)	
(A + B) ÷ 2 = **6'-0"** (1829)	
(A + B) ÷ 2 = **5'-6"** (1676)	
(A + B) ÷ 2 = **5'-0"** (1524)	
(A + B) ÷ 2 = **4'-6"** (1372)	
(A + B) ÷ 2 = **4'-0"** (1219)	
(A + B) ÷ 2 = **3'-6"** (1067)	
(A + B) ÷ 2 = **3'-0"** (914)	
(A + B) ÷ 2 = **2'-6"** (762)	21
(A + B) ÷ 2 = **2'-0"** (610)	34
(A + B) ÷ 2 = **1'-6"** (457)	49
	8'-6" (2591)

Average Adjacent Window Dimension	C = (length of join)
(A + B) ÷ 2 = **12'-6"** (3810)	
(A + B) ÷ 2 = **12'-0"** (3658)	
(A + B) ÷ 2 = **11'-6"** (3505)	
(A + B) ÷ 2 = **11'-0"** (3353)	
(A + B) ÷ 2 = **10'-6"** (3200)	
(A + B) ÷ 2 = **10'-0"** (3048)	
(A + B) ÷ 2 = **9'-6"** (2896)	
(A + B) ÷ 2 = **9'-0"** (2743)	
(A + B) ÷ 2 = **8'-6"** (2591)	
(A + B) ÷ 2 = **8'-0"** (2438)	
(A + B) ÷ 2 = **7'-6"** (2286)	
(A + B) ÷ 2 = **7'-0"** (2134)	
(A + B) ÷ 2 = **6'-6"** (1981)	
(A + B) ÷ 2 = **6'-0"** (1829)	
(A + B) ÷ 2 = **5'-6"** (1676)	
(A + B) ÷ 2 = **5'-0"** (1524)	
(A + B) ÷ 2 = **4'-6"** (1372)	
(A + B) ÷ 2 = **4'-0"** (1219)	
(A + B) ÷ 2 = **3'-6"** (1067)	
(A + B) ÷ 2 = **3'-0"** (914)	
(A + B) ÷ 2 = **2'-6"** (762)	
(A + B) ÷ 2 = **2'-0"** (610)	25
(A + B) ÷ 2 = **1'-6"** (457)	42
	9'-0" (2743)

Average Adjacent Window Dimension	C = (length of join)
(A + B) ÷ 2 = **12'-6"** (3810)	
(A + B) ÷ 2 = **12'-0"** (3658)	
(A + B) ÷ 2 = **11'-6"** (3505)	
(A + B) ÷ 2 = **11'-0"** (3353)	
(A + B) ÷ 2 = **10'-6"** (3200)	
(A + B) ÷ 2 = **10'-0"** (3048)	
(A + B) ÷ 2 = **9'-6"** (2896)	
(A + B) ÷ 2 = **9'-0"** (2743)	
(A + B) ÷ 2 = **8'-6"** (2591)	
(A + B) ÷ 2 = **8'-0"** (2438)	
(A + B) ÷ 2 = **7'-6"** (2286)	
(A + B) ÷ 2 = **7'-0"** (2134)	
(A + B) ÷ 2 = **6'-6"** (1981)	
(A + B) ÷ 2 = **6'-0"** (1829)	
(A + B) ÷ 2 = **5'-6"** (1676)	
(A + B) ÷ 2 = **5'-0"** (1524)	
(A + B) ÷ 2 = **4'-6"** (1372)	
(A + B) ÷ 2 = **4'-0"** (1219)	
(A + B) ÷ 2 = **3'-6"** (1067)	
(A + B) ÷ 2 = **3'-0"** (914)	
(A + B) ÷ 2 = **2'-6"** (762)	
(A + B) ÷ 2 = **2'-0"** (610)	
(A + B) ÷ 2 = **1'-6"** (457)	30
	10'-0" (3048)

Average Adjacent Window Dimension	C = (length of join)
(A + B) ÷ 2 = **12'-6"** (3810)	
(A + B) ÷ 2 = **12'-0"** (3658)	
(A + B) ÷ 2 = **11'-6"** (3505)	
(A + B) ÷ 2 = **11'-0"** (3353)	
(A + B) ÷ 2 = **10'-6"** (3200)	
(A + B) ÷ 2 = **10'-0"** (3048)	
(A + B) ÷ 2 = **9'-6"** (2896)	
(A + B) ÷ 2 = **9'-0"** (2743)	
(A + B) ÷ 2 = **8'-6"** (2591)	
(A + B) ÷ 2 = **8'-0"** (2438)	
(A + B) ÷ 2 = **7'-6"** (2286)	
(A + B) ÷ 2 = **7'-0"** (2134)	
(A + B) ÷ 2 = **6'-6"** (1981)	
(A + B) ÷ 2 = **6'-0"** (1829)	
(A + B) ÷ 2 = **5'-6"** (1676)	
(A + B) ÷ 2 = **5'-0"** (1524)	
(A + B) ÷ 2 = **4'-6"** (1372)	
(A + B) ÷ 2 = **4'-0"** (1219)	
(A + B) ÷ 2 = **3'-6"** (1067)	
(A + B) ÷ 2 = **3'-0"** (914)	
(A + B) ÷ 2 = **2'-6"** (762)	
(A + B) ÷ 2 = **2'-0"** (610)	
(A + B) ÷ 2 = **1'-6"** (457)	29
	10'-6" (3200)

Average Adjacent Window Dimension	C = (length of join)
(A + B) ÷ 2 = **12'-6"** (3810)	
(A + B) ÷ 2 = **12'-0"** (3658)	
(A + B) ÷ 2 = **11'-6"** (3505)	
(A + B) ÷ 2 = **11'-0"** (3353)	
(A + B) ÷ 2 = **10'-6"** (3200)	
(A + B) ÷ 2 = **10'-0"** (3048)	
(A + B) ÷ 2 = **9'-6"** (2896)	
(A + B) ÷ 2 = **9'-0"** (2743)	
(A + B) ÷ 2 = **8'-6"** (2591)	
(A + B) ÷ 2 = **8'-0"** (2438)	
(A + B) ÷ 2 = **7'-6"** (2286)	
(A + B) ÷ 2 = **7'-0"** (2134)	
(A + B) ÷ 2 = **6'-6"** (1981)	
(A + B) ÷ 2 = **6'-0"** (1829)	
(A + B) ÷ 2 = **5'-6"** (1676)	
(A + B) ÷ 2 = **5'-0"** (1524)	
(A + B) ÷ 2 = **4'-6"** (1372)	
(A + B) ÷ 2 = **4'-0"** (1219)	
(A + B) ÷ 2 = **3'-6"** (1067)	
(A + B) ÷ 2 = **3'-0"** (914)	
(A + B) ÷ 2 = **2'-6"** (762)	
(A + B) ÷ 2 = **2'-0"** (610)	
(A + B) ÷ 2 = **1'-6"** (457)	27
	11'-0" (3353)

Average Adjacent Window Dimension	C = (length of join)
(A + B) ÷ 2 = **12'-6"** (3810)	
(A + B) ÷ 2 = **12'-0"** (3658)	
(A + B) ÷ 2 = **11'-6"** (3505)	
(A + B) ÷ 2 = **11'-0"** (3353)	
(A + B) ÷ 2 = **10'-6"** (3200)	
(A + B) ÷ 2 = **10'-0"** (3048)	
(A + B) ÷ 2 = **9'-6"** (2896)	
(A + B) ÷ 2 = **9'-0"** (2743)	
(A + B) ÷ 2 = **8'-6"** (2591)	
(A + B) ÷ 2 = **8'-0"** (2438)	
(A + B) ÷ 2 = **7'-6"** (2286)	
(A + B) ÷ 2 = **7'-0"** (2134)	
(A + B) ÷ 2 = **6'-6"** (1981)	
(A + B) ÷ 2 = **6'-0"** (1829)	
(A + B) ÷ 2 = **5'-6"** (1676)	
(A + B) ÷ 2 = **5'-0"** (1524)	
(A + B) ÷ 2 = **4'-6"** (1372)	
(A + B) ÷ 2 = **4'-0"** (1219)	
(A + B) ÷ 2 = **3'-6"** (1067)	
(A + B) ÷ 2 = **3'-0"** (914)	
(A + B) ÷ 2 = **2'-6"** (762)	
(A + B) ÷ 2 = **2'-0"** (610)	
(A + B) ÷ 2 = **1'-6"** (457)	26
	11'-6" (3505)

Average Adjacent Window Dimension	C = (length of join)
(A + B) ÷ 2 = **12'-6"** (3810)	
(A + B) ÷ 2 = **12'-0"** (3658)	
(A + B) ÷ 2 = **11'-6"** (3505)	
(A + B) ÷ 2 = **11'-0"** (3353)	
(A + B) ÷ 2 = **10'-6"** (3200)	
(A + B) ÷ 2 = **10'-0"** (3048)	
(A + B) ÷ 2 = **9'-6"** (2896)	
(A + B) ÷ 2 = **9'-0"** (2743)	
(A + B) ÷ 2 = **8'-6"** (2591)	
(A + B) ÷ 2 = **8'-0"** (2438)	
(A + B) ÷ 2 = **7'-6"** (2286)	
(A + B) ÷ 2 = **7'-0"** (2134)	
(A + B) ÷ 2 = **6'-6"** (1981)	
(A + B) ÷ 2 = **6'-0"** (1829)	
(A + B) ÷ 2 = **5'-6"** (1676)	
(A + B) ÷ 2 = **5'-0"** (1524)	
(A + B) ÷ 2 = **4'-6"** (1372)	
(A + B) ÷ 2 = **4'-0"** (1219)	
(A + B) ÷ 2 = **3'-6"** (1067)	
(A + B) ÷ 2 = **3'-0"** (914)	
(A + B) ÷ 2 = **2'-6"** (762)	
(A + B) ÷ 2 = **2'-0"** (610)	
(A + B) ÷ 2 = **1'-6"** (457)	25
	12'-0" (3658)

Average Adjacent Window Dimension	C = (length of join)
(A + B) ÷ 2 = **12'-6"** (3810)	
(A + B) ÷ 2 = **12'-0"** (3658)	
(A + B) ÷ 2 = **11'-6"** (3505)	
(A + B) ÷ 2 = **11'-0"** (3353)	
(A + B) ÷ 2 = **10'-6"** (3200)	
(A + B) ÷ 2 = **10'-0"** (3048)	
(A + B) ÷ 2 = **9'-6"** (2896)	
(A + B) ÷ 2 = **9'-0"** (2743)	
(A + B) ÷ 2 = **8'-6"** (2591)	
(A + B) ÷ 2 = **8'-0"** (2438)	
(A + B) ÷ 2 = **7'-6"** (2286)	
(A + B) ÷ 2 = **7'-0"** (2134)	
(A + B) ÷ 2 = **6'-6"** (1981)	
(A + B) ÷ 2 = **6'-0"** (1829)	
(A + B) ÷ 2 = **5'-6"** (1676)	
(A + B) ÷ 2 = **5'-0"** (1524)	
(A + B) ÷ 2 = **4'-6"** (1372)	
(A + B) ÷ 2 = **4'-0"** (1219)	
(A + B) ÷ 2 = **3'-6"** (1067)	
(A + B) ÷ 2 = **3'-0"** (914)	
(A + B) ÷ 2 = **2'-6"** (762)	
(A + B) ÷ 2 = **2'-0"** (610)	
(A + B) ÷ 2 = **1'-6"** (457)	24
	12'-6" (3810)

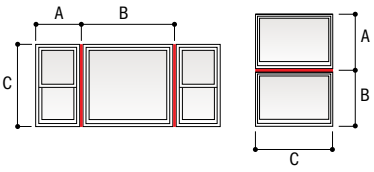

Only 1-way combinations similar to those shown above are allowed.

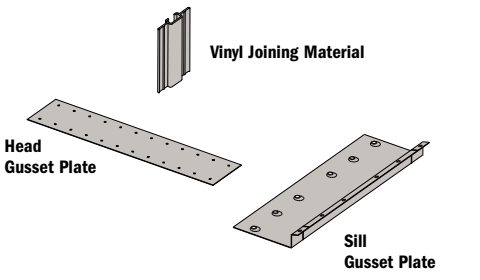
Vinyl Joining Material
Head
Gusset Plate
Sill
Gusset Plate</ant

COMBINATION DESIGNS

Double-Hung Windows

1-Way Vinyl Joining With V-Notch Gusset Plates

400 Series Woodwright® and Tilt-Wash Double-Hung, Picture and Transom Full-Frame Windows

Average Adjacent Window Dimension	C = (length of join)	4'-6" (1372) or less	5'-0" (1524)	5'-6" (1676)	6'-0" (1829)	6'-6" (1981)	7'-0" (2134)	7'-6" (2286)	8'-0" (2438)	8'-6" (2591)	9'-0" (2743)	9'-6" (2896)	10'-0" (3048)	10'-6" (3200)	11'-0" (3353)	11'-6" (3505)	12'-0" (3658)	12'-6" (3810)
(A + B) ÷ 2 = **12'-6"** (3810)		50	48	41	33	29	24	22										
(A + B) ÷ 2 = **12'-0"** (3658)		50	48	41	33	29	24	22										
(A + B) ÷ 2 = **11'-6"** (3505)		50	48	41	33	29	24	22										
(A + B) ÷ 2 = **11'-0"** (3353)		50	48	41	33	29	24	22										
(A + B) ÷ 2 = **10'-6"** (3200)		50	48	41	33	29	24	22										
(A + B) ÷ 2 = **10'-0"** (3048)		50	48	41	33	29	24	22										
(A + B) ÷ 2 = **9'-6"** (2896)		50	48	41	33	29	24	22										
(A + B) ÷ 2 = **9'-0"** (2743)		50	48	41	33	29	24	22										
(A + B) ÷ 2 = **8'-6"** (2591)		50	48	41	33	29	24	22										
(A + B) ÷ 2 = **8'-0"** (2438)		50	48	41	33	29	24	22										
(A + B) ÷ 2 = **7'-6"** (2286)		50	48	41	33	29	24	22										
(A + B) ÷ 2 = **7'-0"** (2134)		50	48	41	33	29	24	22										
(A + B) ÷ 2 = **6'-6"** (1981)		50	48	41	33	29	25	22										
(A + B) ÷ 2 = **6'-0"** (1829)		50	48	41	33	29	25	23	20									
(A + B) ÷ 2 = **5'-6"** (1676)		50	48	41	33	30	26	24	21									
(A + B) ÷ 2 = **5'-0"** (1524)		50	48	41	34	31	27	24	22	20								
(A + B) ÷ 2 = **4'-6"** (1372)		50	48	42	36	32	28	26	23	22								
(A + B) ÷ 2 = **4'-0"** (1219)		50	49	43	37	34	30	28	25	23	21							
(A + B) ÷ 2 = **3'-6"** (1067)		50	50	47	40	37	33	31	28	26	24	23	20					
(A + B) ÷ 2 = **3'-0"** (914)		50	50	50	44	40	36	33	30	29	26	25	22	20				
(A + B) ÷ 2 = **2'-6"** (762)		50	50	50	50	47	42	39	36	34	31	30	26	24	21	20		
(A + B) ÷ 2 = **2'-0"** (610)		50	50	50	50	50	49	46	42	40	37	35	31	31	27	25	22	
(A + B) ÷ 2 = **1'-6"** (457)		50	50	50	50	50	50	50	50	50	49	47	44	41	37	34	30	26

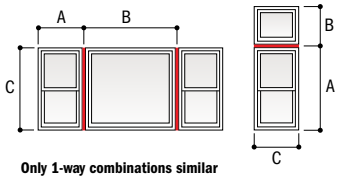

Only 1-way combinations similar to those shown above are allowed.



Vinyl Joining Material

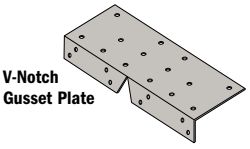

V-Notch Gusset Plate

1-Way or 2-Way Steel Joining With V-Notch Gusset Plates

400 Series Woodwright® and Tilt-Wash Double-Hung, Picture and Transom Full-Frame Windows

Average Adjacent Window Dimension	C = (length of join)	5'-6" (1676) or less	6'-0" (1829)	6'-6" (1981)	7'-0" (2134)	7'-6" (2286)	8'-0" (2438)	8'-6" (2591)	9'-0" (2743)	9'-6" (2896)	10'-0" (3048)	10'-6" (3200)	11'-0" (3353)	11'-6" (3505)	12'-0" (3658)	12'-6" (3810)
(A + B) ÷ 2 = **7'-6"** (2286)		50	40	35	30	27	23	21								
(A + B) ÷ 2 = **7'-0"** (2134)		50	40	35	30	27	23	21								
(A + B) ÷ 2 = **5'-6"** (1676)		50	41	36	31	29	26	24	21	20						
(A + B) ÷ 2 = **5'-0"** (1524)		50	42	37	32	30	27	25	22	21						
(A + B) ÷ 2 = **4'-6"** (1372)		50	43	39	34	32	28	27	24	23	21					
(A + B) ÷ 2 = **4'-0"** (1219)		50	45	41	36	34	30	28	26	25	22	21				
(A + B) ÷ 2 = **3'-6"** (1067)		50	50	45	40	37	34	32	29	28	26	24	20			
(A + B) ÷ 2 = **3'-0"** (914)		50	50	50	44	41	37	35	32	30	28	26	22			
(A + B) ÷ 2 = **2'-6"** (762)		50	50	50	50	48	44	41	38	36	34	31	26	23		
(A + B) ÷ 2 = **2'-0"** (610)		50	50	50	50	50	50	48	44	41	38	36	34	30	24	21

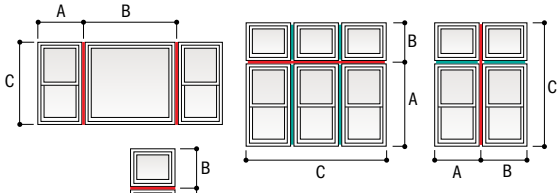

Red lines represent priority join (dimension C in table).

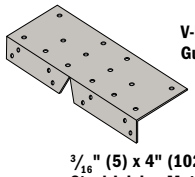

V-Notch Gusset Plate

$^{3}/_{16}$" (5) x 4" (102) Steel Joining Material



- Numerical values in charts represent structural pressure only.
- Structural performance of any combination is only as high as the lowest structural performance of any individual unit or joining material in the combination.
- Andersen® products must be installed and anchored properly according to joining and installation instructions to meet rated structural performance. Refer to product joining and installation instructions at andersenwindows.com.
- Dimensions in parentheses are in millimeters.

Double-Hung Windows

1-Way LVL Joining

400 Series Woodwright® and Tilt-Wash Double-Hung, Picture and Transom Full-Frame Windows, and Flexiframe® Windows

4 9/16" (116) Minimum Wall Depth

Average Adjacent Window Dimension							
(A + B) ÷ 2 = **6'-0"** (1829)	50	50	50	50	40	32
(A + B) ÷ 2 = **5'-6"** (1676)	50	50	50	50	42	33
(A + B) ÷ 2 = **5'-0"** (1524)	50	50	50	50	43	35
(A + B) ÷ 2 = **4'-6"** (1372)	50	50	50	50	46	38
(A + B) ÷ 2 = **4'-0"** (1219)	50	50	50	50	49	39
(A + B) ÷ 2 = **3'-6"** (1067)	50	50	50	50	50	44
(A + B) ÷ 2 = **3'-0"** (914)	50	50	50	50	50	48
(A + B) ÷ 2 = **2'-6"** (762)	50	50	50	50	50	50
(A + B) ÷ 2 = **2'-0"** (610)	50	50	50	50	50	50
(A + B) ÷ 2 = **1'-6"** (457)	50	50	50	50	50	50
(A + B) ÷ 2 = **1'-0"** (305)	50	50	50	50	50	50
C = (length of join)	**5'-6"** (1676) **or less**	**6'-0"** (1829)	**6'-6"** (1981)	**7'-0"** (2134)	**7'-6"** (2286)	**8'-0"** (2438)

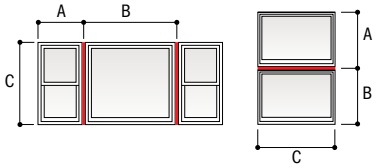

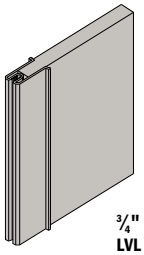

¾" (19) x 5 ¾" (146) LVL Joining Material
For 4 9/16" (116) jamb depths.

2-Way LVL Joining

400 Series Woodwright® and Tilt-Wash Double-Hung, Picture and Transom Full-Frame Windows, and Flexiframe® Windows

6 9/16" (167) Minimum Wall Depth

Average Adjacent Window Dimension									
(A + B) ÷ 2 = **10'-0"** (3048)	50	50	50	50	48	44	37	31	24
(A + B) ÷ 2 = **9'-6"** (2896)	50	50	50	50	48	44	37	31	24
(A + B) ÷ 2 = **9'-0"** (2743)	50	50	50	50	48	44	37	31	24
(A + B) ÷ 2 = **8'-6"** (2591)	50	50	50	50	48	44	37	31	25
(A + B) ÷ 2 = **8'-0"** (2438)	50	50	50	50	48	44	37	31	25
(A + B) ÷ 2 = **7'-6"** (2286)	50	50	50	50	48	44	38	32	26
(A + B) ÷ 2 = **7'-0"** (2134)	50	50	50	50	49	45	39	33	26
(A + B) ÷ 2 = **6'-6"** (1981)	50	50	50	50	50	46	40	34	28
(A + B) ÷ 2 = **6'-0"** (1829)	50	50	50	50	50	47	41	35	29
(A + B) ÷ 2 = **5'-6"** (1676)	50	50	50	50	50	50	44	37	30
(A + B) ÷ 2 = **5'-0"** (1524)	50	50	50	50	50	50	46	39	32
(A + B) ÷ 2 = **4'-6"** (1372)	50	50	50	50	50	50	50	43	35
(A + B) ÷ 2 = **4'-0"** (1219)	50	50	50	50	50	50	50	46	38
(A + B) ÷ 2 = **3'-6"** (1067)	50	50	50	50	50	50	50	50	42
(A + B) ÷ 2 = **3'-0"** (914)	50	50	50	50	50	50	50	50	47
(A + B) ÷ 2 = **2'-6"** (762)	50	50	50	50	50	50	50	50	50
(A + B) ÷ 2 = **2'-0"** (610)	50	50	50	50	50	50	50	50	50
(A + B) ÷ 2 = **1'-6"** (457)	50	50	50	50	50	50	50	50	50
C = (length of join)	**6'-0"** (1829) **or less**	**6'-6"** (1981)	**7'-0"** (2134)	**7'-6"** (2286)	**8'-0"** (2438)	**8'-6"** (2591)	**9'-0"** (2743)	**9'-6"** (2896)	**10'-0"** (3048)

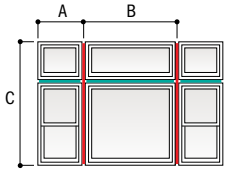

Red lines represent priority join (dimension C in table).

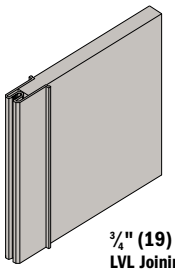

¾" (19) x 7 ¾" (197) LVL Joining Material
For 6 9/16" (167) jamb depths.

2-way joining must be assembled on the job site within the rough opening. When creating 2-way combinations for 6 9/16" (167) minimum wall thickness, 6 9/16" (167) LVL joining material is required.

- Numerical values in charts represent structural pressure only.
- Structural performance of any combination is only as high as the lowest structural performance of any individual unit or joining material in the combination.
- Andersen® products must be installed and anchored properly according to joining and installation instructions to meet rated structural performance. Refer to product joining and installation instructions at andersenwindows.com.
- Dimensions in parentheses are in millimeters.

COMBINATION DESIGNS

Patio Doors

1-Way Jamb-to-Jamb Joining

400 Series Stationary and Two-Panel Frenchwood® Gliding Patio Doors

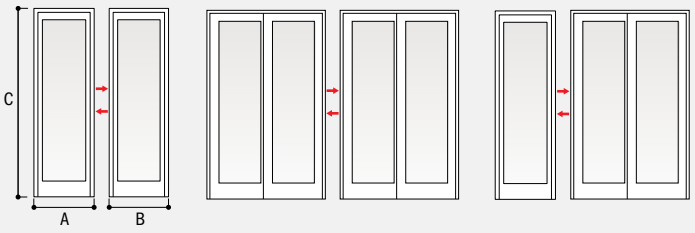

Maximum design pressure 20 psf

1-Way Jamb-to-Jamb Vertical (Ribbon) Joining

400 Series Stationary and Two-Panel Frenchwood® Gliding Patio Doors, and Frenchwood Patio Door Sidelights

Average Adjacent Door/Sidelight Dimension										
(A + B) ÷ 2 = **8'-0"** (2438)	65	65	65	65	61	51	44	37	33	29
(A + B) ÷ 2 = **7'-6"** (2286)	65	65	65	65	61	51	44	37	33	29
(A + B) ÷ 2 = **7'-0"** (2134)	65	65	65	65	61	51	44	37	33	29
(A + B) ÷ 2 = **6'-6"** (1981)	65	65	65	65	61	51	44	38	33	30
(A + B) ÷ 2 = **6'-0"** (1829)	65	65	65	65	61	51	44	38	34	31
(A + B) ÷ 2 = **5'-6"** (1676)	65	65	65	65	61	52	45	39	35	32
(A + B) ÷ 2 = **5'-0"** (1524)	65	65	65	65	62	53	46	41	37	33
(A + B) ÷ 2 = **4'-6"** (1372)	65	65	65	65	63	55	48	43	39	35
(A + B) ÷ 2 = **4'-0"** (1219)	65	65	65	65	65	58	51	46	42	38
(A + B) ÷ 2 = **3'-6"** (1067)	65	65	65	65	65	62	55	50	46	42
(A + B) ÷ 2 = **3'-0"** (914)	65	65	65	65	65	65	62	56	51	47
(A + B) ÷ 2 = **2'-6"** (762)	65	65	65	65	65	65	65	64	59	55
(A + B) ÷ 2 = **2'-0"** (610)	65	65	65	65	65	65	65	65	65	65
(A + B) ÷ 2 = **1'-6"** (457)	65	65	65	65	65	65	65	65	65	65
C = (length of join)	**3'-6"** (1067)	**4'-0"** (1219)	**4'-6"** (1372)	**5'-0"** (1524)	**5'-6"** (1676)	**6'-0"** (1829)	**6'-6"** (1981)	**7'-0"** (2134)	**7'-6"** (2286)	**8'-0"** (2438)

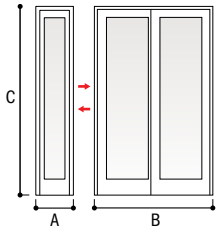

1-Way Jamb-to-Jamb Horizontal (Stacked) Joining

400 Series Stationary and Two-Panel Frenchwood® Gliding Patio Doors, and Frenchwood Patio Door Sidelights and Transoms

Average Adjacent Door/Sidelight/Transom Dimension										
(A + B) ÷ 2 = **12'-6"** (3810)	65	65	65	65	52	40	31	25		
(A + B) ÷ 2 = **12'-0"** (3658)	65	65	65	65	52	40	31	25		
(A + B) ÷ 2 = **11'-6"** (3505)	65	65	65	65	52	40	31	25		
(A + B) ÷ 2 = **11'-0"** (3353)	65	65	65	65	52	40	31	25		
(A + B) ÷ 2 = **10'-6"** (3200)	65	65	65	65	52	40	31	25		
(A + B) ÷ 2 = **10'-0"** (3048)	65	65	65	65	52	40	31	25		
(A + B) ÷ 2 = **9'-6"** (2896)	65	65	65	65	52	40	31	25		
(A + B) ÷ 2 = **9'-0"** (2743)	65	65	65	65	52	40	31	25		
(A + B) ÷ 2 = **8'-6"** (2591)	65	65	65	65	52	40	31	25		
(A + B) ÷ 2 = **8'-0"** (2438)	65	65	65	65	52	40	31	25		
(A + B) ÷ 2 = **7'-6"** (2286)	65	65	65	65	52	40	31	25		
(A + B) ÷ 2 = **7'-0"** (2134)	65	65	65	65	52	40	31	25		
(A + B) ÷ 2 = **6'-6"** (1981)	65	65	65	65	52	40	31	25		
(A + B) ÷ 2 = **6'-0"** (1829)	65	65	65	65	52	40	32	25	20	
(A + B) ÷ 2 = **5'-6"** (1676)	65	65	65	65	52	40	32	26	20	
(A + B) ÷ 2 = **5'-0"** (1524)	65	65	65	65	53	41	34	28	22	
(A + B) ÷ 2 = **4'-6"** (1372)	65	65	65	65	54	44	36	29	23	
(A + B) ÷ 2 = **4'-0"** (1219)	65	65	65	65	58	47	39	32	25	21
(A + B) ÷ 2 = **3'-6"** (1067)	65	65	65	65	63	51	43	35	28	23
(A + B) ÷ 2 = **3'-0"** (914)	65	65	65	65	65	58	49	40	32	26
(A + B) ÷ 2 = **2'-6"** (762)	65	65	65	65	65	65	57	47	38	31
(A + B) ÷ 2 = **2'-0"** (610)	65	65	65	65	65	65	65	58	47	38
(A + B) ÷ 2 = **1'-6"** (457)	65	65	65	65	65	65	65	65	62	51
C = (length of join)	**3'-6"** (1067)	**4'-0"** (1219)	**4'-6"** (1372)	**5'-0"** (1524)	**5'-6"** (1676)	**6'-0"** (1829)	**6'-6"** (1981)	**7'-0"** (2134)	**7'-6"** (2286)	**8'-0"** (2438)

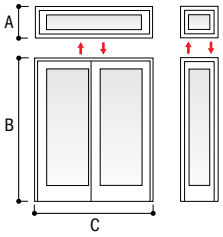

- Numerical values in charts represent structural pressure only.
- Structural performance of any combination is only as high as the lowest structural performance of any individual unit or joining material in the combination.
- Andersen® products must be installed and anchored properly according to joining and installation instructions to meet rated structural performance. Refer to product joining and installation instructions at andersenwindows.com.
- Dimensions in parentheses are in millimeters.

Patio Doors

1-Way Aluminum Joining

400 Series Frenchwood® Hinged Inswing Patio Doors, and Frenchwood Patio Door Sidelights and Transoms

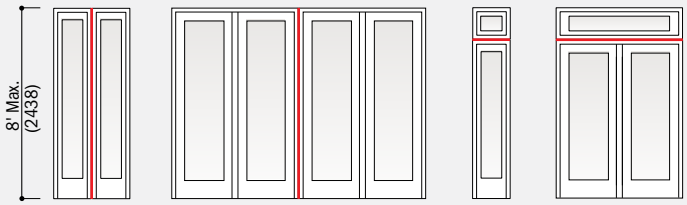

Maximum design pressure 25 psf

When joining hinged inswing patio doors, do not join hinge jamb to hinge jamb.

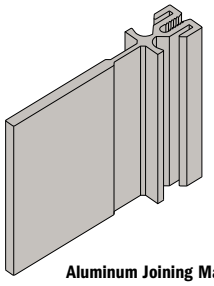

Aluminum Joining Material

2-Way Aluminum Joining

400 Series Frenchwood® Hinged Inswing Patio Doors, and Frenchwood Patio Door Sidelights and Transoms

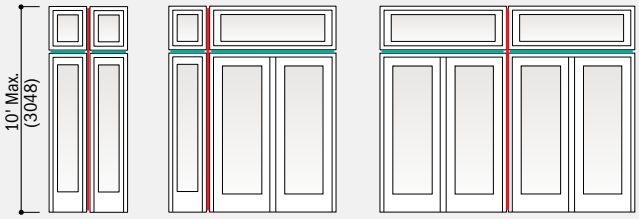

Maximum design pressure 20 psf

When joining hinged inswing patio doors, do not join hinge jamb to hinge jamb.

Red lines represent priority join.

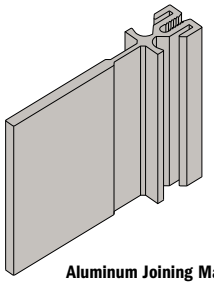

Aluminum Joining Material

- Numerical values in charts represent structural pressure only.
- Structural performance of any combination is only as high as the lowest structural performance of any individual unit or joining material in the combination.
- Andersen® products must be installed and anchored properly according to joining and installation instructions to meet rated structural performance. Refer to product joining and installation instructions at andersenwindows.com.
- Dimensions in parentheses are in millimeters.

Patio Doors

1-Way Fiberglass Joining

400 Series Frenchwood® Gliding and Hinged Inswing Patio Doors, and Frenchwood Patio Door Sidelights and Transoms

4 9/16" (116) Minimum Wall Depth

Average Adjacent Door/Sidelight/Transom Dimension													
(A + B) ÷ 2 = **12'-0"** (3658)	70	70	70	70	70	70	70	70	70	70	70	70	67
(A + B) ÷ 2 = **11'-6"** (3505)	70	70	70	70	70	70	70	70	70	70	70	70	67
(A + B) ÷ 2 = **11'-0"** (3353)	70	70	70	70	70	70	70	70	70	70	70	70	67
(A + B) ÷ 2 = **10'-6"** (3200)	70	70	70	70	70	70	70	70	70	70	70	70	67
(A + B) ÷ 2 = **10'-0"** (3048)	70	70	70	70	70	70	70	70	70	70	70	70	67
(A + B) ÷ 2 = **9'-6"** (2896)	70	70	70	70	70	70	70	70	70	70	70	70	67
(A + B) ÷ 2 = **9'-0"** (2743)	70	70	70	70	70	70	70	70	70	70	70	70	67
(A + B) ÷ 2 = **8'-6"** (2591)	70	70	70	70	70	70	70	70	70	70	70	70	67
(A + B) ÷ 2 = **8'-0"** (2438)	70	70	70	70	70	70	70	70	70	70	70	70	67
(A + B) ÷ 2 = **7'-6"** (2286)	70	70	70	70	70	70	70	70	70	70	70	70	67
(A + B) ÷ 2 = **7'-0"** (2134)	70	70	70	70	70	70	70	70	70	70	70	70	68
(A + B) ÷ 2 = **6'-6"** (1981)	70	70	70	70	70	70	70	70	70	70	70	70	70
(A + B) ÷ 2 = **6'-0"** (1829)	70	70	70	70	70	70	70	70	70	70	70	70	70
(A + B) ÷ 2 = **5'-6"** (1676)	70	70	70	70	70	70	70	70	70	70	70	70	70
(A + B) ÷ 2 = **5'-0"** (1524)	70	70	70	70	70	70	70	70	70	70	70	70	70
(A + B) ÷ 2 = **4'-6"** (1372)	70	70	70	70	70	70	70	70	70	70	70	70	70
(A + B) ÷ 2 = **4'-0"** (1219)	70	70	70	70	70	70	70	70	70	70	70	70	70
(A + B) ÷ 2 = **3'-6"** (1067)	70	70	70	70	70	70	70	70	70	70	70	70	70
(A + B) ÷ 2 = **3'-0"** (914)	70	70	70	70	70	70	70	70	70	70	70	70	70
(A + B) ÷ 2 = **2'-6"** (762)	70	70	70	70	70	70	70	70	70	70	70	70	70
(A + B) ÷ 2 = **2'-0"** (610)	70	70	70	70	70	70	70	70	70	70	70	70	70
(A + B) ÷ 2 = **1'-6"** (457)	70	70	70	70	70	70	70	70	70	70	70	70	70
C = (length of join)	**2'-0"** (610)	**2'-6"** (762)	**3'-0"** (914)	**3'-6"** (1067)	**4'-0"** (1219)	**4'-6"** (1372)	**5'-0"** (1524)	**5'-6"** (1676)	**6'-0"** (1829)	**6'-6"** (1981)	**7'-0"** (2134)	**7'-6"** (2286)	**8'-0"** (2438)

continued on next page

1-Way Fiberglass Joining

400 Series Frenchwood® Gliding and Hinged Inswing Patio Doors, and Frenchwood Patio Door Sidelights and Transoms

6 9/16" (167) Minimum Wall Depth

Average Adjacent Door/Sidelight/Transom Dimension													
(A + B) ÷ 2 = **12'-0"** (3658)	70	70	70	70	70	70	70	70	70	70	70	70	70
(A + B) ÷ 2 = **11'-6"** (3505)	70	70	70	70	70	70	70	70	70	70	70	70	70
(A + B) ÷ 2 = **11'-0"** (3048)	70	70	70	70	70	70	70	70	70	70	70	70	70
(A + B) ÷ 2 = **10'-6"** (3200)	70	70	70	70	70	70	70	70	70	70	70	70	70
(A + B) ÷ 2 = **10'-0"** (3048)	70	70	70	70	70	70	70	70	70	70	70	70	70
(A + B) ÷ 2 = **9'-6"** (2896)	70	70	70	70	70	70	70	70	70	70	70	70	70
(A + B) ÷ 2 = **9'-0"** (2743)	70	70	70	70	70	70	70	70	70	70	70	70	70
(A + B) ÷ 2 = **8'-6"** (2591)	70	70	70	70	70	70	70	70	70	70	70	70	70
(A + B) ÷ 2 = **8'-0"** (2438)	70	70	70	70	70	70	70	70	70	70	70	70	70
(A + B) ÷ 2 = **7'-6"** (2286)	70	70	70	70	70	70	70	70	70	70	70	70	70
(A + B) ÷ 2 = **7'-0"** (2134)	70	70	70	70	70	70	70	70	70	70	70	70	70
(A + B) ÷ 2 = **6'-6"** (1981)	70	70	70	70	70	70	70	70	70	70	70	70	70
(A + B) ÷ 2 = **6'-0"** (1829)	70	70	70	70	70	70	70	70	70	70	70	70	70
(A + B) ÷ 2 = **5'-6"** (1676)	70	70	70	70	70	70	70	70	70	70	70	70	70
(A + B) ÷ 2 = **5'-0"** (1524)	70	70	70	70	70	70	70	70	70	70	70	70	70
(A + B) ÷ 2 = **4'-6"** (1372)	70	70	70	70	70	70	70	70	70	70	70	70	70
(A + B) ÷ 2 = **4'-0"** (1219)	70	70	70	70	70	70	70	70	70	70	70	70	70
(A + B) ÷ 2 = **3'-6"** (1067)	70	70	70	70	70	70	70	70	70	70	70	70	70
(A + B) ÷ 2 = **3'-0"** (914)	70	70	70	70	70	70	70	70	70	70	70	70	70
(A + B) ÷ 2 = **2'-6"** (762)	70	70	70	70	70	70	70	70	70	70	70	70	70
(A + B) ÷ 2 = **2'-0"** (610)	70	70	70	70	70	70	70	70	70	70	70	70	70
(A + B) ÷ 2 = **1'-6"** (457)	70	70	70	70	70	70	70	70	70	70	70	70	70
C = (length of join)	**2'-0"** (610)	**2'-6"** (762)	**3'-0"** (914)	**3'-6"** (1067)	**4'-0"** (1219)	**4'-6"** (1372)	**5'-0"** (1524)	**5'-6"** (1676)	**6'-0"** (1829)	**6'-6"** (1981)	**7'-0"** (2134)	**7'-6"** (2286)	**8'-0"** (2438)

continued on next page

- Numerical values in charts represent structural pressure only.
- Structural performance of any combination is only as high as the lowest structural performance of any individual unit or joining material in the combination.
- Fiberglass joins are certified up to PG70 when installed according to Andersen installation instructions.
- Andersen® products must be installed and anchored properly according to joining and installation instructions to meet rated structural performance. Refer to product joining and installation instructions at andersenwindows.com.
- Frenchwood® hinged inswing patio doors with a 6 9/16" (167) or greater exterior extension jamb depth require 7 3/4" (197) fiberglass joining material.
- Two-panel doors shown. Three- and four-panel doors similar with different overall A and B widths.
- Dimensions in parentheses are in millimeters.

1-Way Fiberglass Joining continued from previous page

52	42	33	27	22			
52	42	33	27	22			
52	42	33	27	22			
52	42	33	27	22			
52	42	33	27	22			
52	42	33	27	23			
52	42	34	27	23			
52	42	34	28	23	20		
53	42	35	29	24	20		
53	43	35	29	25	21		
55	44	37	31	26	22		
56	46	38	32	27	2	20	
59	48	40	34	29	25	21	
62	51	43	36	31	26	23	20
66	55	46	39	33	28	25	21
70	59	50	42	36	31	27	24
70	65	55	47	40	35	30	26
70	70	62	53	45	39	34	30
70	70	70	61	52	45	39	34
70	70	70	70	62	54	47	41
70	70	70	70	70	67	58	51
70	70	70	70	70	70	70	68
8'-6" (2591)	**9'-0"** (2743)	**9'-6"** (2896)	**10'-0"** (3048)	**10'-6"** (3200)	**11'-0"** (3353)	**11'-6"** (3505)	**12'-0"** (3658)

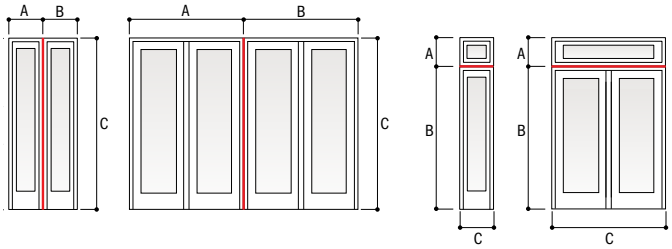

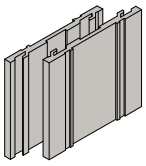

¾" (19) x 5 ¾" (146)
Fiberglass Joining Material
For 4 9/16" (116) base jamb depths.

When joining hinged inswing patio doors, do not join hinge jamb to hinge jamb.

Always use a structural header to separate transom windows from four-panel gliding patio doors.

1-Way Fiberglass Joining continued from previous page

70	70	66	58	47	39	33	28	23	20		
70	70	66	58	47	39	33	28	24	20		
70	70	66	58	47	39	33	28	24	21		
70	70	66	58	47	39	33	28	24	21		
70	70	66	58	48	40	34	29	25	21		
70	70	66	58	48	40	34	29	25	22		
70	70	66	59	49	41	35	30	26	23	20	
70	70	67	59	50	42	36	31	27	23	21	
70	70	68	61	51	43	37	32	28	24	21	
70	70	69	63	53	45	39	33	29	25	22	20
70	70	70	65	55	47	40	35	31	27	24	21
70	70	70	68	58	49	43	37	32	28	25	22
70	70	70	70	61	52	45	39	34	30	27	24
70	70	70	70	65	56	48	42	37	33	29	26
70	70	70	70	70	60	52	46	40	36	32	28
70	70	70	70	70	66	57	50	44	39	35	31
70	70	70	70	70	70	64	56	49	44	39	35
70	70	70	70	70	70	70	63	56	49	44	39
70	70	70	70	70	70	70	70	65	57	51	46
70	70	70	70	70	70	70	70	70	68	61	54
70	70	70	70	70	70	70	70	70	70	70	68
70	70	70	70	70	70	70	70	70	70	70	70
8'-6" (2591)	**9'-0"** (2743)	**9'-6"** (2896)	**10'-0"** (3048)	**10'-6"** (3200)	**11'-0"** (3353)	**11'-6"** (3505)	**12'-0"** (3658)	**12'-6"** (3810)	**13'-0"** (3962)	**13'-6"** (4114)	**14'-0"** (4267)

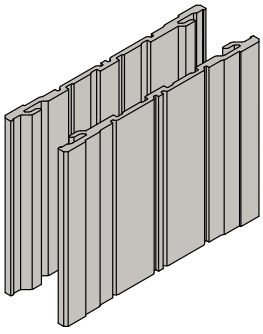

¾" (19) x 7 ¾" (197)
Fiberglass Joining Material
For higher performance for 1-way and 2-way joining. Required for hinged inswing patio doors with 6 9/16" (167) or greater exterior extension jamb depths.

When joining hinged inswing patio doors, do not join hinge jamb to hinge jamb.

Always use a structural header to separate transom windows from four-panel gliding patio doors.

- Numerical values in charts represent structural pressure only.
- Structural performance of any combination is only as high as the lowest structural performance of any individual unit or joining material in the combination.
- Fiberglass joins are certified up to PG70 when installed according to Andersen installation instructions.
- Andersen® products must be installed and anchored properly according to joining and installation instructions to meet rated structural performance. Refer to product joining and installation instructions at andersenwindows.com.
- Frenchwood® hinged inswing patio doors with a 6 9/16" (167) or greater exterior extension jamb depth require 7 ¾" (197) fiberglass joining material.
- Two-panel doors shown. Three- and four-panel doors similar with different overall A and B widths.
- Dimensions in parentheses are in millimeters.

Patio Doors

2-Way Fiberglass Joining

400 Series Frenchwood® Gliding and Hinged Inswing Patio Doors, and Frenchwood Patio Door Sidelights and Transoms

4 9/16" (116) Minimum Wall Depth

Average Adjacent Door/Sidelight/Transom Dimension														
(A + B) ÷ 2 = **12'-0"** (3658)	70	70	70	70	62	55	50	45	41	38	35	31	25
(A + B) ÷ 2 = **11'-6"** (3505)	70	70	70	70	65	58	52	47	43	40	37	32	27
(A + B) ÷ 2 = **11'-0"** (3353)	70	70	70	70	68	60	54	49	45	42	39	34	28
(A + B) ÷ 2 = **10'-6"** (3200)	70	70	70	70	70	63	57	51	47	44	40	35	29
(A + B) ÷ 2 = **10'-0"** (3048)	70	70	70	70	70	66	60	54	50	46	42	37	31
(A + B) ÷ 2 = **9'-6"** (2896)	70	70	70	70	70	70	63	57	52	48	45	39	32
(A + B) ÷ 2 = **9'-0"** (2743)	70	70	70	70	70	70	66	60	55	51	47	41	34
(A + B) ÷ 2 = **8'-6"** (2591)	70	70	70	70	70	70	70	64	58	54	50	44	36
(A + B) ÷ 2 = **8'-0"** (2438)	70	70	70	70	70	70	70	68	62	57	53	47	38
(A + B) ÷ 2 = **7'-6"** (2286)	70	70	70	70	70	70	70	70	66	61	57	50	41
(A + B) ÷ 2 = **7'-0"** (2134)	70	70	70	70	70	70	70	70	70	65	61	53	44
(A + B) ÷ 2 = **6'-6"** (1981)	70	70	70	70	70	70	70	70	70	70	65	58	47
(A + B) ÷ 2 = **6'-0"** (1829)	70	70	70	70	70	70	70	70	70	70	70	62	51
(A + B) ÷ 2 = **5'-6"** (1676)	70	70	70	70	70	70	70	70	70	70	70	68	56
(A + B) ÷ 2 = **5'-0"** (1524)	70	70	70	70	70	70	70	70	70	70	70	70	62
(A + B) ÷ 2 = **4'-6"** (1372)	70	70	70	70	70	70	70	70	70	70	70	70	69
(A + B) ÷ 2 = **4'-0"** (1219)	70	70	70	70	70	70	70	70	70	70	70	70	70
(A + B) ÷ 2 = **3'-6"** (1067)	70	70	70	70	70	70	70	70	70	70	70	70	70
(A + B) ÷ 2 = **3'-0"** (914)	70	70	70	70	70	70	70	70	70	70	70	70	70
(A + B) ÷ 2 = **2'-6"** (762)	70	70	70	70	70	70	70	70	70	70	70	70	70
(A + B) ÷ 2 = **2'-0"** (610)	70	70	70	70	70	70	70	70	70	70	70	70	70
(A + B) ÷ 2 = **1'-6"** (457)	70	70	70	70	70	70	70	70	70	70	70	70	70
C = (length of join)	**2'-0"** (610)	**2'-6"** (762)	**3'-0"** (914)	**3'-6"** (1067)	**4'-0"** (1219)	**4'-6"** (1372)	**5'-0"** (1524)	**5'-6"** (1676)	**6'-0"** (1829)	**6'-6"** (1981)	**7'-0"** (2134)	**7'-6"** (2286)	**8'-0"** (2438)

continued on next page

2-Way Fiberglass Joining

400 Series Frenchwood® Gliding and Hinged Inswing Patio Doors, and Frenchwood Patio Door Sidelights and Transoms

6 9/16" (167) Minimum Wall Depth

Average Adjacent Door/Sidelight/Transom Dimension													
(A + B) ÷ 2 = **12'-0"** (3658)	70	70	70	70	62	55	50	45	41	38	35	33	31
(A + B) ÷ 2 = **11'-6"** (3505)	70	70	70	70	65	58	52	47	43	40	37	34	32
(A + B) ÷ 2 = **11'-0"** (3048)	70	70	70	70	68	60	54	49	45	42	39	36	34
(A + B) ÷ 2 = **10'-6"** (3200)	70	70	70	70	70	63	57	51	47	44	40	38	35
(A + B) ÷ 2 = **10'-0"** (3048)	70	70	70	70	70	66	60	54	50	46	42	40	37
(A + B) ÷ 2 = **9'-6"** (2896)	70	70	70	70	70	70	63	57	52	48	45	42	39
(A + B) ÷ 2 = **9'-0"** (2743)	70	70	70	70	70	70	66	60	55	51	47	44	41
(A + B) ÷ 2 = **8'-6"** (2591)	70	70	70	70	70	70	70	64	58	54	50	47	44
(A + B) ÷ 2 = **8'-0"** (2438)	70	70	70	70	70	70	70	68	62	57	53	50	46
(A + B) ÷ 2 = **7'-6"** (2286)	70	70	70	70	70	70	70	70	66	61	57	53	50
(A + B) ÷ 2 = **7'-0"** (2134)	70	70	70	70	70	70	70	70	70	65	61	57	53
(A + B) ÷ 2 = **6'-6"** (1981)	70	70	70	70	70	70	70	70	70	70	65	61	57
(A + B) ÷ 2 = **6'-0"** (1829)	70	70	70	70	70	70	70	70	70	70	70	66	62
(A + B) ÷ 2 = **5'-6"** (1676)	70	70	70	70	70	70	70	70	70	70	70	70	68
(A + B) ÷ 2 = **5'-0"** (1524)	70	70	70	70	70	70	70	70	70	70	70	70	70
(A + B) ÷ 2 = **4'-6"** (1372)	70	70	70	70	70	70	70	70	70	70	70	70	70
(A + B) ÷ 2 = **4'-0"** (1219)	70	70	70	70	70	70	70	70	70	70	70	70	70
(A + B) ÷ 2 = **3'-6"** (1067)	70	70	70	70	70	70	70	70	70	70	70	70	70
(A + B) ÷ 2 = **3'-0"** (914)	70	70	70	70	70	70	70	70	70	70	70	70	70
(A + B) ÷ 2 = **2'-6"** (762)	70	70	70	70	70	70	70	70	70	70	70	70	70
(A + B) ÷ 2 = **2'-0"** (610)	70	70	70	70	70	70	70	70	70	70	70	70	70
(A + B) ÷ 2 = **1'-6"** (457)	70	70	70	70	70	70	70	70	70	70	70	70	70
C = (length of join)	**2'-0"** (610)	**2'-6"** (762)	**3'-0"** (914)	**3'-6"** (1067)	**4'-0"** (1219)	**4'-6"** (1372)	**5'-0"** (1524)	**5'-6"** (1676)	**6'-0"** (1829)	**6'-6"** (1981)	**7'-0"** (2134)	**7'-6"** (2286)	**8'-0"** (2438)

continued on next page

- Numerical values in charts represent structural pressure only.
- Structural performance of any combination is only as high as the lowest structural performance of any individual unit or joining material in the combination.
- Fiberglass joins are certified up to PG70 when installed according to Andersen installation instructions.
- Andersen® products must be installed and anchored properly according to joining and installation instructions to meet rated structural performance. Refer to product joining and installation instructions at andersenwindows.com.
- Frenchwood® hinged inswing patio doors with a 6 9/16" (167) or greater exterior extension jamb depth require 7 3/4" (197) fiberglass joining material.
- Two-panel doors shown. Three- and four-panel doors similar with different overall A and B widths.
- Dimensions in parentheses are in millimeters.

2-Way Fiberglass Joining continued from previous page

21							
22							
23							
24	20						
25	21						
27	23						
28	24	20					
30	25	21					
32	27	23					
34	29	24	21				
37	31	26	22				
39	33	28	24	21			
43	36	30	26	22			
47	39	33	28	25	21		
51	43	37	31	27	23	20	
57	48	41	35	28	26	23	20
64	54	46	39	34	29	26	23
70	62	53	45	39	34	29	26
70	70	61	53	45	39	34	30
70	70	70	63	54	47	41	36
70	70	70	70	68	59	52	46
70	70	70	70	70	70	69	61
8'-6" (2591)	**9'-0"** (2743)	**9'-6"** (2896)	**10'-0"** (3048)	**10'-6"** (3200)	**11'-0"** (3353)	**11'-6"** (3505)	**12'-0"** (3658)

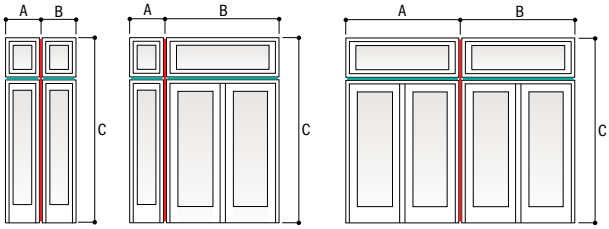

Red lines represent priority join (dimension C in table).

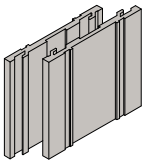

¾" (19) x 5 ¾" (146)
Fiberglass Joining Material
For 4 9/16" (116) base jamb depths.

When joining hinged inswing patio doors, do not join hinge jamb to hinge jamb.

Always use a structural header to separate transom windows from four-panel gliding patio doors.

2-Way Fiberglass Joining continued from previous page

29	27	26	25	22	20						
30	29	27	26	23	21						
32	30	28	27	25	22						
33	31	30	28	26	23	21					
35	33	31	30	27	25	22	21				
37	35	33	31	28	26	24	22				
39	37	35	33	30	27	25	23	21			
41	39	37	35	32	29	27	24	22			
44	41	39	37	34	31	28	26	24	22		
47	44	42	40	36	33	30	28	25	23	22	
50	47	45	42	39	35	32	30	27	25	23	22
54	51	48	46	42	38	35	32	29	27	25	23
58	55	52	50	45	41	38	35	32	29	27	25
64	60	57	54	50	45	41	38	35	32	30	28
70	66	63	60	55	50	45	42	38	35	33	30
70	70	70	66	61	55	50	46	43	39	37	34
70	70	70	70	68	62	57	52	48	44	41	38
70	70	70	70	70	70	65	60	55	51	47	44
70	70	70	70	70	70	70	70	64	59	55	51
70	70	70	70	70	70	70	70	70	70	66	61
70	70	70	70	70	70	70	70	70	70	70	70
70	70	70	70	70	70	70	70	70	70	70	70
8'-6" (2591)	**9'-0"** (2743)	**9'-6"** (2896)	**10'-0"** (3048)	**10'-6"** (3200)	**11'-0"** (3353)	**11'-6"** (3505)	**12'-0"** (3658)	**12'-6"** (3810)	**13'-0"** (3962)	**13'-6"** (4114)	**14'-0"** (4267)

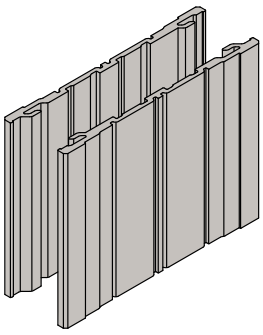

¾" (19) x 7 ¾" (197)
Fiberglass Joining Material
For higher performance for 1-way and 2-way joining. Required for hinged inswing patio doors with 6 9/16" (167) or greater exterior extension jamb depths.

When joining hinged inswing patio doors, do not join hinge jamb to hinge jamb.

Always use a structural header to separate transom windows from four-panel gliding patio doors.

- Numerical values in charts represent structural pressure only.
- Structural performance of any combination is only as high as the lowest structural performance of any individual unit or joining material in the combination.
- Fiberglass joins are certified up to PG70 when installed according to Andersen installation instructions.
- Andersen® products must be installed and anchored properly according to joining and installation instructions to meet rated structural performance. Refer to product joining and installation instructions at andersenwindows.com.
- Frenchwood® hinged inswing patio doors with a 6 9/16" (167) or greater exterior extension jamb depth require 7 ¾" (197) fiberglass joining material.
- Two-panel doors shown. Three- and four-panel doors similar with different overall A and B widths.
- Dimensions in parentheses are in millimeters.

Patio Doors and Windows

1-Way Steel Joining

400 Series Patio Doors and Windows

Average Adjacent Window/Door Dimension	C = (length of join)	5'-6" (1676) or less	6'-0" (1829)	6'-6" (1981)	7'-0" (2134)	7'-6" (2286)	8'-0" (2438)	8'-6" (2591)	9'-0" (2743)	9'-6" (2896)	10'-0" (3048)	10'-6" (3200)	11'-0" (3353)	11'-6" (3505)	12'-0" (3658)	12'-6" (3810)
(A + B) ÷ 2 = **12'-6"** (3810)		40	37	33	25	22										
(A + B) ÷ 2 = **12'-0"** (3658)		40	37	34	26	23										
(A + B) ÷ 2 = **11'-6"** (3505)		40	38	35	27	24										
(A + B) ÷ 2 = **11'-0"** (3353)		40	39	36	29	25										
(A + B) ÷ 2 = **10'-6"** (3200)		40	40	37	30	27	21									
(A + B) ÷ 2 = **10'-0"** (3048)		40	40	37	32	28	22									
(A + B) ÷ 2 = **9'-6"** (2896)		40	40	39	34	30	23	20								
(A + B) ÷ 2 = **9'-0"** (2743)		40	40	40	36	32	25	21								
(A + B) ÷ 2 = **8'-6"** (2591)		40	40	40	37	34	27	22								
(A + B) ÷ 2 = **8'-0"** (2438)		40	40	40	39	36	28	24								
(A + B) ÷ 2 = **7'-6"** (2286)		40	40	40	40	37	31	27	21							
(A + B) ÷ 2 = **7'-0"** (2134)		40	40	40	40	40	32	28	22							
(A + B) ÷ 2 = **6'-6"** (1981)		40	40	40	40	40	36	31	25	23						
(A + B) ÷ 2 = **6'-0"** (1829)		40	40	40	40	40	39	36	27	24	20					
(A + B) ÷ 2 = **5'-6"** (1676)		40	40	40	40	40	40	37	30	25	24					
(A + B) ÷ 2 = **5'-0"** (1524)		40	40	40	40	40	40	40	36	28	25					
(A + B) ÷ 2 = **4'-6"** (1372)		40	40	40	40	40	40	40	37	31	27	23	20			
(A + B) ÷ 2 = **4'-0"** (1219)		40	40	40	40	40	40	40	40	37	30	26	25	21		
(A + B) ÷ 2 = **3'-6"** (1067)		40	40	40	40	40	40	40	40	40	36	27	26	25		
(A + B) ÷ 2 = **3'-0"** (914)		40	40	40	40	40	40	40	40	40	40	36	30	26	23	
(A + B) ÷ 2 = **2'-6"** (762)		40	40	40	40	40	40	40	40	40	40	40	38	34	26	20
(A + B) ÷ 2 = **2'-0"** (610)		40	40	40	40	40	40	40	40	40	40	40	40	40	34	28

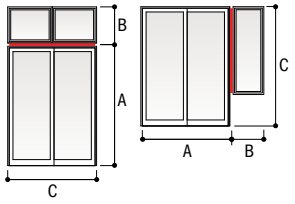

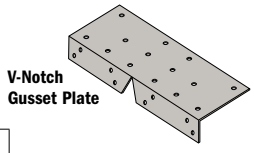

$^{3}/_{16}$" (5) x 4" (102)
Steel Joining Material

Intended for use with patio door to window joins only. Please refer to patio door tables for further information regarding structural support between doors.

When using exterior extension jambs on Frenchwood® hinged patio doors, special conditions apply. For complete installation details, visit **andersenwindows.com**.

Always use a structural header to separate transom windows from four-panel patio doors.

Figure 1

Andersen recommends use of a separating structural header between the door head and sill of any transom unit(s). If you choose not to use a header, and a single row of transom units is desired above the door, make sure the units are securely fastened to the adjacent framing and securely "hung" by screwing through the transom unit frame(s) into the header above. Steel joining may be required. **IMPORTANT: HEADER SAG MAY ADVERSELY AFFECT THE PROPER FUNCTIONING AND PERFORMANCE OF THE DOOR AND/OR WINDOW.** No weight from the transom unit(s) may be transferred to the door head if proper operation of the door is to be achieved. For four-panel gliding patio doors, see Figure 3.

Figure 2

Any transom combination made up of more than a single row of windows must have a separating header (by others).

Figure 3

Always use a structural header to separate transom windows from four-panel gliding patio doors. For all other door types, see Figure 1.

Figure 4

Steel reinforced joining is recommended whenever transom or sidelight windows are placed above or beside door units.

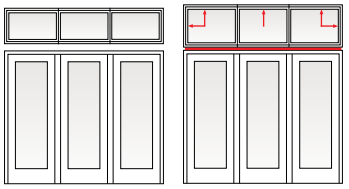

Figure 1

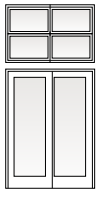

Figure 2

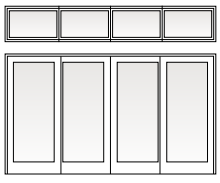

Figure 3

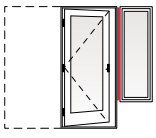

Figure 4

- Numerical values in charts represent structural pressure only.
- Structural performance of any combination is only as high as the lowest structural performance of any individual unit or joining material in the combination.
- Andersen® products must be installed and anchored properly according to joining and installation instructions to meet rated structural performance. Refer to product joining and installation instructions at andersenwindows.com.
- Dimensions in parentheses are in millimeters.

Altitude Limits for Products With Dual-Pane Glass

The chart below gives the altitude limit in feet for 400 Series products with dual-pane glass in this guide. If the installation of a given product is at an altitude greater than that shown in this chart, a capillary breather tube must be ordered. Be aware that the use of a capillary breather tube eliminates argon gas blend fill and will result in a slightly lower thermal performance (approximately 0.02 increase in unit U-Factor). For NFRC certified total unit performance on units with capillary breather tubes for higher altitude applications, see your Andersen supplier.

The use of dual-pane insulating glass without capillary breather tubes at altitudes higher than its rating will result in severe glass distortion, increased glass breakage potential and a risk of seal failure. Smaller units are most affected by altitude changes. An increase in altitude results in a decrease in atmospheric pressure. A sealed insulating glass unit attempts to combat this change by increasing its volume to reduce its pressure. One way to increase its volume is by glass deflection. A smaller unit is stiffer and does not deflect as much as a larger unit therefore, it cannot relieve the pressure as readily. Thus, the load applied to the glass is greater, resulting in a greater risk for breakage. Another way the unit tries to increase its volume is by increasing the edge area; i.e., the seal area. The increased pressure applied to the edge seal load for a smaller unit is therefore greater, increasing the chance for seal failure.

Andersen® Product	2,000	3,000	4,000	5,000	6,000	7,000	8,000	9,000	10,000
400 Series Casement and Awning Windows			CR12 CR125 AR21 AR251	CR13 AR31 CR135 AR351 CR14 AR41 CR145 AR451 CR15 AR51 CR155 AR551 CR16 AR61 CN12 AN21 CN125 AN251 CN13 AN281	CN135 AN451 CN14 AN51 CN145 AN551 CN15 AN61 CN155 CN16 AN351 AN41	C12 A251 C125 A281 C13 A31 C135 A351 C155 A551 C16 A61 CW12 AW21 A21	C14 A451 C145 A51 C15 AW251 CW125 AW281 CW13 AW31 CW135 AW351 CW14 AW41 CW145 AW451 CX125 AX251 A41	CW155 AX31 CW16 AX351 CX13 AX41 CX135 AX451 CX14 AX51 CX145 AXW281 CX15 AW551 AW61 AX281	CW15 AW51 A335 CX155 AX551 A3535 CX16 AX61 AP32V CXW13 AXW31 AP352V CXW135 AXW351 AP42V CXW14 AXW41 CXW145 AXW451 CXW15 AXW51 CXW155 AXW551 CXW16 AXW16
	3,000		4,000	AR281 AN31		8,000	9,000		10,000
400 Series Casement/Awning Picture and Transom Windows	CTR1510 CTR3410 PTR3010 CTR7010 CTR1810 CTR4010 PTR3510 CTR2010 CTR4810 PTR4010 CTR2410 CTR5210 PTR4510 CTR2810 CTR51110 PTR5010 CTR2910 CTC5110 PTR5510 CTR3010 CTC6010 PTR6010					P3030 P3530 P3035 P4030 P3040 P4530 P3045 P5030 P3050 P5530 P3055	P3060 P6030	P3535 P4035 P3540 P4040 P3545 P4045 P3550 P4050 P3555 P4055 P3560 P4060	P4535 P5035 P5535 P6045 P4540 P5040 P5540 P6050 P4545 P5045 P5545 P4550 P5050 P5550 P4555 P5055 P6035 P4560 P5060 P6040
400 Series Woodwright® Double-Hung Windows Designate product code WDH, WS, WA or WU. E = equal sash C = cottage or reverse cottage sash			18210 20210 24210 26210 28210 210210 30210 34210 38210	1832 2432 1836 2436 18310 2632 1842 2636 1846 2832 18410 2836 1852 21032 1856E 21036 1856C 3032 18510 3036 1862 3432 2032 3436 2036 3832	20310 28310 2042 2842 2046 210310 20410 21042 2052 30310 2056E 3042 2056C 34310 20510 3442 2062 3836 24310 38310 2442 3842 26310 2642	2446 3446 24410 3456C 2452 3846 2456E 3856C 2456C 24510 2462 2646 2656C 2846 2856C 3046 3056C	26410 3052 2652 34410 2656E 3452 26510 38410 2662 3852 28410 2852 2856E 28510 2862 210410 21052 30410	21056 210510 21062 3056E 30510 3062 3456E 34510 3856E 38510	3462 3862
400 Series Woodwright Picture Windows		WPW10310 WPW1042 WPW1046 WPW10410 WPW1052 WPW1056 WPW10510 WPW1062					WPW30310 WPW3042 WPW3046 WPW30410 WPW3052 WPW3056 WPW34510 WPW3462	WPW30510 WPW3062 WPW3446 WPW34410 WPW3452 WPW3456	WPW34310 WPW31062 WPW410310 WPW5642 WPW3442 WPW42310 WPW41042 WPW5646 WPW310310 WPW4242 WPW41046 WPW56410 WPW31042 WPW4246 WPW410410 WPW5652 WPW31046 WPW42410 WPW41052 WPW5656 WPW310410 WPW4252 WPW41056 WPW56510 WPW31052 WPW4256 WPW410510 WPW5662 WPW31056 WPW42510 WPW41062 WPW310510 WPW4262 WPW56310
	3,000	4,000							
400 Series Woodwright Transom Windows	WTR1810 WTR2010 WTR2410 WTR2610 WTR2810 WTR21010 WTR3010 WTR3410 WTR3810 WTR31010 WTR4210 WTR41010 WTR5610 WTR6210	WTR1815 WTR2817 WTR41017 WTR1817 WTR21015 WTR5615 WTR18111 WTR21017 WTR5617 WTR1821 WTR3015 WTR6215 WTR1823 WTR3017 WTR6217 WTR1827 WTR3415 WTR1831 WTR3417 WTR2015 WTR3815 WTR2017 WTR3817 WTR2415 WTR31015 WTR2417 WTR31017 WTR2615 WTR4215 WTR2617 WTR4217 WTR2815 WTR41015		WTR20111 WTR62111 WTR2021 WTR2023 WTR2027 WTR2031 WTR24111 WTR26111 WTR28111 WTR210111 WTR30111 WTR34111 WTR38111 WTR310111 WTR410111	WTR2421 WTR3821 WTR2423 WTR3823 WTR2427 WTR31021 WTR2431 WTR31023 WTR2621 WTR42111 WTR2623 WTR4221 WTR2821 WTR4223 WTR2823 WTR41021 WTR21021 WTR41023 WTR21023 WTR5621 WTR3021 WTR5623 WTR3023 WTR6221 WTR3421 WTR6223 WTR3423	WTR2627 WTR2631 WTR2827 WTR2831 WTR21027 WTR3027 WTR3427 WTR3827 WTR31027 WRT4227 WRT41027 WTR5627 WTR6227	WTR21031 WTR3031 WTR4231 WTR41031 WTR5631 WTR6231	WTR3431 WTR3831 WTR31031	
400 Series Tilt-Wash Double-Hung Windows E = equal sash C = cottage or reverse cottage sash				TW18210 TW210210 TW1832 TW21032 TW1836 TW24210 TW18310 TW2432 TW1842 TW26210 TW1846 TW2632 TW18410 TW28210 TW1852 TW2832 TW1856E TW30210 TW1856C TW3032 TW20210 TW34210 TW2032 TW38210	TW18510 TW3832 TW1862 TW1872 TW1876 TW2036 TW2436 TW2636 TW2836 TW21036 TW3036 TW3432 TW3436	TW20310 TW2642 TW2042 TW28310 TW2046 TW2842 TW20410 TW210310 TW2052 TW21042 TW2056E TW30310 TW2056C TW3042 TW20510 TW34310 TW2062 TW3442 TW24310 TW3836 TW2442 TW38310 TW26310 TW3842	TW2072 TW2076 TW2446 TW24410 TW2452 TW2456E TW2456C TW24510 TW2462 TW2472 TW2476	TW2646 TW21046 TW26410 TW210410 TW2652 TW21056C TW2656E TW3046 TW2656C TW30410 TW26510 TW3056C TW2662 TW3446 TW2672 TW34410 TW2676 TW3456C TW2846 TW3846 TW28410 TW38410 TW2856C TW3856C	TW2852 TW3052 TW3852 TW2856E TW3056E TW3856E TW28510 TW30510 TW38510 TW2862 TW3062 TW3862 TW2872 TW3072 TW3872 TW2876 TW3076 TW3876 TW21052 TW3452 TW21056E TW3456E TW210510 TW34510 TW21062 TW3462 TW21072 TW3472 TW21076 TW3476

• Deflection of glass will occur on units with larger glass areas. If interior/exterior grilles are used on double-hung windows, gliding windows or gliding patio doors at higher altitudes without capillary breather tubes, some interference may occur, affecting operation.

continued on next page

• Contact your Andersen supplier for altitude limits for custom-size windows and patio doors.

Altitude Limits for Products With Dual-Pane Glass *(continued)*

Andersen® Product	2,000	3,000	4,000	5,000	6,000	7,000	8,000	9,000	10,000
400 Series Tilt-Wash Picture Windows		DHP10310 DHP1042 DHP1046 DHP10410 DHP1052 DHP1056 DHP10510 DHP1062					DHP30510	DHP3042 DHP3046 DHP30410 DHP3052 DHP3056 DHP30310 DHP3062	DHP34310 DHP31046 DHP4252 DHP410510 DHP3442 DHP310410 DHP4256 DHP41062 DHP3446 DHP31052 DHP42510 DHP56310 DHP34410 DHP31056 DHP4262 DHP5642 DHP3452 DHP310510 DHP410310 DHP5646 DHP3456 DHP31062 DHP41042 DHP56410 DHP34510 DHP42310 DHP41046 DHP5652 DHP3462 DHP4242 DHP410410 DHP5656 DHP310310 DHP4246 DHP41052 DHP56510 DHP31042 DHP42410 DHP41056 DHP5662
	3,000	**4,000**							
400 Series Tilt-Wash Transom Windows	TWT1810 TWT2010 TWT2410 TWT2610 TWT2810 TWT21010 TWT3010 TWT3410 TWT3810 TWT31010 TWT4210 TWT41010 TWT5610 TWT6210	TWT1815 TWT1817 TWT18111 TWT1821 TWT1823 TWT1827 TWT1831 TWT2015 TWT2017 TWT2415 TWT2417 TWT2615 TWT2617 TWT2815	TWT2817 TWT41017 TWT21015 TWT5615 TWT21017 TWT5617 TWT3015 TWT6215 TWT3017 TWT6217 TWT3415 TWT3417 TWT3815 TWT3817 TWT31015 TWT31017 TWT4215 TWT4217 TWT41015	TWT20111 TWT3021 TWT2021 TWT34111 TWT2023 TWT3421 TWT2027 TWT38111 TWT2031 TWT3821 TWT24111 TWT310111 TWT2421 TWT31021 TWT26111 TWT42111 TWT2621 TWT410111 TWT28111 TWT56111 TWT2821 TWT62111 TWT210111 TWT21021 TWT30111	TWT2423 TWT41021 TWT2427 TWT5621 TWT2431 TWT6221 TWT2623 TWT6223 TWT2627 TWT2631 TWT2823 TWT21023 TWT3023 TWT3423 TWT3823 TWT31023 TWT4221 TWT4223	TWT2827 TWT2831 TWT21027 TWT21031 TWT3027 TWT3427 TWT3827 TWT31027 TWT4227 TWT41023 TWT41027 TWT5623 TWT6227	TWT3031 TWT5627 TWT5631	TWT3431 TWT3831 TWT31031 TWT4231 TWT41031 TWT6231	
400 Series Gliding Windows			G32 G35 G33 G42 G336 G52 G34	G62	G43 G436	G44 G45	G53 G536 G54	G55 G63	G636 G64 G65
		4,000							
400 Series Half Circle, Quarter Circle and Elliptical Windows		CTC1 CTCW1 CTCX1	CTCXW1 CTN28 CTN20 CTN30 CTN24 ET6	CTN34 ET8	CTC2 CTQC1	CTCW2 CTN30-2 CTCX2 CTQCW1 CTC3 CTN28-2	CTQCX1		CTQA3
400 Series Circle and Oval Windows			OVL1824	OVL2030	CIR20	CIR24		OVL3048	CIR30
400 Series Extended Gothic, Octagon, Monumental Quarter Circle, and Monumental Circle Windows		GT2036 OC20	GT2440 OC24		GT3046 OC30		GT4056 QR40 FR40		FR60
	3,000								
400 Series Eyebrow Windows	FCD28 FCD30	FCD34 FCD38	FCCXW3 FCCW2 FCC2 FCFW50	FCFW60					
	3,000								
400 Series Arch Windows	AFC106 AFC11 AFC12 AFC13 AFC135 AFCW106 AFCW11 AFCP3006 AFCP301	AFC206 AFC21 AFCW206 AFCW21 AFFW5006 AFFW501 AFFW6006 AFFW8006 AFFW12006	AFC14 AFCW14 AFC145 AFCP302 AFC15 AFFW601 AFC155 AFFW801 AFC16 AFC18 AFCW12 AFCW13 AFCW135	AFCW145 AFCW15 AFCW155 AFCW16 AFCW18 AFCW22 AFC22 AFFW502 AFFW1201	AFCP303 AFCP3035 AFCP304 AFCP3045 AFCP305 AFFW602	AFCP3055 AFCP306 AFCP308 AFC23 AFCW23 AFFW802 AFFW1202	AFC235 AFFW603 AFC24 AFC245 AFC25 AFC255 AFC26 AFCW235 AFFW503 AFFW5035	AFFW6035	AFC28 AFFW5045 AFFW6055 AFFW8055 AFCW24 AFFW505 AFFW606 AFFW806 AFCW245 AFFW5055 AFFW608 AFCW25 AFFW506 AFFW803 AFCW255 AFFW508 AFFW8035 AFCW26 AFFW604 AFFW804 AFCW28 AFFW6045 AFFW8045 AFFW504 AFFW605 AFFW805
								10,000	
400 Series Springline™ Windows		SE3106		SE311	SE312 SE313 SE3135 SE314 SE3145	SE315 SE6006 SE3155 SE316 SE5806 ELFW6006	SP402 SP4055 SP403 SE541 SP4035 SE581 SP404 SE601 SP4045 ELFW8006	SP406 SE545 SE542 SE5455 SE543 SE546 SE5435 SE582 SE544 SE583	SE584 SE602 SE6055 SP802 SE5845 SE603 SE606 SE585 SE6035 ELFW801 SE5855 SE604 ELFW802 SE586 SE6045 SP8006
	3,000		**4,000**	**5,000**	SE5406	ELFW601	SP405	SE5445 SE5835	ELFW602 SE605 SP801
400 Series Springline Flanker Windows	CR3 CR35 CR4 CR5	CR6 CN3 CN35 CN4	CN5 CN6 C35	C4 C5 C6 CW35 CW4 CW5 CW6	CXW4 CXW5	CXW6			
400 Series Flexiframe® Windows Rectangular* Non-Rectangular*	35" (0-889)	0-24" (0-610) 36-46" (914-1168)	25-27" (635-689) 47-54" (1194-1372)	28-30" (711-762) 55-60" (1397-1524)	31-35" (787-889) 61-70" (1549-1778)	36-40" (914-1016) 71-80" (1803-2032)	41-46" (1041-1168) > 80" (2032)	47-50" (1194-1270)	> 50" (1270)
400 Series Frenchwood® Gliding Patio Doors									FWG5068 FWG6068 FWG8068 FWG50611 FWG60611 FWG80611 FWG5080 FWG6080 FWG8080
400 Series Frenchwood Hinged Inswing Patio Doors							FWH4168 FWH41611 FWH4180		FWH5068 FWH5468 FWH6068 FWH50611 FWH54611 FWH60611 FWH5080 FWH5480 FWH6080
400 Series Frenchwood Patio Door Sidelights				FWSL1368 FWSL1768 FWSL13611 FWSL17611 FWSL1380 FWSL1780					
400 Series Frenchwood Patio Door Sidelight Transoms			FWSLT1311 FWSLT1711 FWSLT1316 FWSLT1716 FWSLT13110 FWSLT17110						
			4,000						
400 Series Frenchwood Patio Door Transoms	FWT2111 FWT2116 FWT21110 FWT2711	FWT2716 FWT27110 FWT2911 FWT2916	FWT29110 FWT4111 FWT3111 FWT4116 FWT3116 FWT41110 FWT31110 FWT5011	FWT5016 FWT54110 FWT50110 FWT6011 FWT5411 FWT6016 FWT5416 FWT60110					

- Deflection of glass will occur on units with larger glass areas. If interior/exterior grilles are used on double-hung windows, gliding windows or gliding patio doors at higher altitudes without capillary breather tubes, some interference may occur, affecting operation.
- Altitude limits for patio doors shown in two-panel configurations. These limits also qualify for same-size panels used in single- or multi-panel configurations.
- Contact your Andersen supplier for altitude limits for custom-size windows and patio doors.
- Dimensions in parentheses are in millimeters.

Altitude Limits for Products With Triple-Pane Glass

The chart below gives the altitude limit in feet for 400 Series products with triple-pane glass in this guide. If the installation of a given product is at an altitude greater than that shown in this chart, a capillary breather tube must be ordered. Be aware that the use of a capillary breather tube eliminates argon gas blend fill and will result in a slightly lower thermal performance (approximately 0.02 increase in unit U-Factor). For NFRC certified total unit performance on units with capillary breather tubes for higher altitude applications, see your Andersen supplier.

The use of triple-pane insulating glass without capillary breather tubes at altitudes higher than its rating will result in severe glass distortion, increased glass breakage potential and a risk of seal failure. Smaller units are most affected by altitude changes. An increase in altitude results in a decrease in atmospheric pressure. A sealed insulating glass unit attempts to combat this change by increasing its volume to reduce its pressure. One way to increase its volume is by glass deflection. A smaller unit is stiffer and does not deflect as much as a larger unit therefore, it cannot relieve the pressure as readily. Thus, the load applied to the glass is greater, resulting in a greater risk for breakage. Another way the unit tries to increase its volume is by increasing the edge area; i.e., the seal area. The increased pressure applied to the edge seal load for a smaller unit is therefore greater, increasing the chance for seal failure.

Andersen® Product	2,000	3,000	4,000	5,000	6,000	7,000	8,000	9,000	10,000
400 Series Frenchwood® Gliding Patio Doors									FWG5068 FWG50611 FWG5080 FWG6068 FWG60611 FWG6080 FWG8068 FWG80611 FWG8080
400 Series Frenchwood Hinged Inswing Patio Doors						FWH4168 FWH4180 FWH41611			FWH5068 FWH50611 FWH5080 FWH5468 FWH54611 FWH5480 FWH6068 FWH60611 FWH6080
400 Series Frenchwood Patio Door Sidelights			FWSL1368 FWSL1380 FWSL13611	FWSL1768 FWSL1780 FWSL17611					
400 Series Frenchwood Patio Door Sidelight Transoms		FWSLT1311 FWSLT1316 FWSLT13110 FWSLT1711 FWSLT1716	FWSLT17110						
400 Series Frenchwood Patio Door Transoms		FWT2111 FWT2711 FWT2911 FWT3111 FWT4111 FWT5011 FWT5411 FWT6011 FWT2116 FWT2716 FWT2916 FWT3116 FWT4116 FWT5016 FWT5416 FWT6016	FWT21110 FWT27110 FWT29110 FWT31110 FWT41110 FWT50110 FWT54110 FWT60110						

- Deflection of glass will occur on units with larger glass areas. If interior/exterior grilles are used on gliding patio doors at higher altitudes without capillary breather tubes, some interference may occur, affecting operation.
- Altitude limits for patio doors shown in two-panel configurations. These limits also qualify for same-size panels used in single- or multi-panel configurations.
- Contact your Andersen supplier for altitude limits for custom-size patio doors.

PERFORMANCE STANDARDS

The Window and Door Manufacturers Association (WDMA), the American Architectural Manufacturers Association (AAMA) and the Canadian Standards Association (CSA) jointly release the North American Fenestration Standard/Specification for Windows, Doors and Skylights (NAFS). NAFS is also referred to as AAMA/WDMA/CSA 101/I.S.2/A440, which is how the International Code Council (ICC) lists this standard in the International Residential Code (IRC) and International Building Code (IBC) as the means to indicate the window, door or skylights design pressure rating used to determine compliance to the job site design pressure requirements.

A product only achieves a "Performance Grade" or "PG" rating when it complies with all of the NAFS performance requirements such as ease of operation, air infiltration resistance, resistance to water penetration and resistance to forced entry, etc. A "Design Pressure Rating" or "DP" rating only depicts the design and structural load performance.

Performance Classes

The NAFS Standard/Specification defines requirements for four performance classes. Performance classes are designated R, LC, CW and AW. This classification system provides for several levels of performance. Product selection is always based on the performance and building code requirements of the particular project.

Elements of Performance Grade (PG) Designations

In order to qualify for a given performance grade (PG), test specimens need to pass all required performance tests for the following, in addition to all required auxiliary (durability) and applicable material/component tests (not shown here) for the applicable product type and desired performance class:

(a) Operating force (if applicable): Maximum operating force varies by product type and performance class.

(b) Air leakage resistance: Tested in accordance with ASTM E283 at a test pressure of 1.57 psf. Allowable air infiltration for R, LC and CW class designations is 0.3 cubic feet per minute per square foot of frame (cfm/ft^2).

(c) Water penetration resistance: Tested in accordance with ASTM E547 with the specified test pressure applied per NAFS. Test consists of four cycles. Each cycle consists of five minutes with pressure applied and one minute with the pressure released, during which the water spray is continuously applied. Water spray shall be uniformly applied at a constant rate of 5 U.S. gal/ft^2 · hr.

(d) Uniform load deflection test: Tested in accordance with ASTM E330 for both positive and negative pressure (pressure defined by NAFS) with the load maintained for a period of 10 seconds. The test specimen shall be evaluated for deflection during each load for permanent damage after each load and for any effects on the normal operation of the specimen. *Starting with the 2008 version of NAFS, design pressure (DP) will only represent the "uniform load deflection test."*

(e) Uniform load structural test: Tested in accordance with ASTM E330 for both positive and negative pressure (pressure defined by NAFS) with the load maintained for a period of 10 seconds. After loads are removed, there shall be no permanent deformation in excess of 0.4% of its span and no damage to the unit, which would make it inoperable.

(f) Forced-entry resistance (if applicable): Tested in accordance with ASTM F588 (windows), F476 (swinging doors) and F842 (sliding doors) at a performance level 10 rating.

Performance Grades (PG) and Corresponding Test Pressures (psf)

Performance Class/ Performance Grade		Air Infiltration Test Pressure		Maximum Allowable Air Infiltration/ Exfiltration Rate		Water Penetration Resistance Test Pressure		Design Pressure		Structural Test Pressure	
R	LC	Pa	psf	L/s·m^2	cfm/ft^2	Pa	psf	Pa	psf	Pa	psf
15	-	75	1.57	1.5	0.30	140	2.92	720	15.04	1080	22.56
20	-	75	1.57	1.5	0.30	150	3.13	960	20.05	1440	30.08
25	25	75	1.57	1.5	0.30	180	3.76	1200	25.06	1800	37.59
30	30	75	1.57	1.5	0.30	220	4.59	1440	30.08	2160	45.11
35	35	75	1.57	1.5	0.30	260	5.43	1680	35.09	2520	52.63
40	40	75	1.57	1.5	0.30	290	6.06	1920	40.10	2880	60.15
45	45	75	1.57	1.5	0.30	330	6.89	2160	45.11	3240	67.67
50	50	75	1.57	1.5	0.30	360	7.52	2400	50.13	3600	75.19
55	55	75	1.57	1.5	0.30	400	8.35	2640	55.14	3960	82.71
60	60	75	1.57	1.5	0.30	440	9.19	2880	60.15	4320	90.23
65	65	75	1.57	1.5	0.30	470	9.82	3120	65.16	4680	97.74
70	70	75	1.57	1.5	0.30	510	10.65	3360	70.18	5040	105.26
75	75	75	1.57	1.5	0.30	540	11.28	3600	75.19	5400	112.78
80	80	75	1.57	1.5	0.30	580	12.11	3840	80.20	5760	120.30
85	85	75	1.57	1.5	0.30	620	12.94	4080	85.21	6120	127.82
90	90	75	1.57	1.5	0.30	660	13.78	4320	90.23	6480	135.34
95	95	75	1.57	1.5	0.30	682	14.25	4560	95.24	6840	142.86
100	100	75	1.57	1.5	0.30	718	15.00	4800	100.25	7200	150.38

HALLMARK CERTIFICATION

The Window and Door Manufacturers Association (WDMA)-sponsored Hallmark Certification Program provides manufacturers with certification to the AAMA/WDMA/CSA 101/I.S.2/A440 Standard and is designed to provide builders, architects, specifiers and consumers with an easily recognizable means of identifying products that have been manufactured and tested in accordance with NAFS (AAMA/WDMA/CSA 101/I.S.2/A440) industry standards and other applicable performance standards. Conformance is determined by periodic in-plant inspections by a third-party administrator. Inspections include auditing licensee quality control procedures and processes, and a review to confirm products are manufactured in accordance with the appropriate performance standards. Periodic testing of representative product constructions and components by an independent testing laboratory is also required. When all of the program requirements are met, the licensee is authorized to use the WDMA Hallmark registered logo on their certification label as a means of identifying products and their performance ratings.

Products successfully obtaining Hallmark Certification will be labeled with a three-part code, which includes performance class, performance grade and size tested. In addition to this mandatory requirement, you are allowed to list the design pressure on a separate line.

WINDOW & DOOR MANUFACTURERS ASSOCIATION WDMA Hallmark Certified www.wdma.com	Andersen Corporation 400 SERIES CASEMENT WINDOW Manufacturer stipulates certification as indicated below.
STANDARD	RATING
AAMA/WDMA/CSA 101/I.S.2/A440-11	Class LC(1) – PG50(2) – Size Tested 59.5 x 71.9 in.(3) DP+50/-50(4)
AAMA/WDMA/CSA 101/I.S.2/A440-08	Class LC(1) – PG50(2) – Size Tested 59.5 x 71.9 in.(3) DP+50/-50(4)

(1) – Performance Class

(2) – Performance Grade

(3) – Size Tested

(4) – Design Pressure

In the example above, the performance class is LC, the performance grade (PG) is 50 pounds per square foot (psf) and the size tested is 59.5" x 71.9". What this means to the specifier is, based on the performance grade chart, the laboratory-tested air infiltration was less than 0.3 cfm/ft^2 (test pressure is always 1.57 psf and the allowable airflow is 0.3 cfm/ft^2), the product tested successfully resisted a laboratory water penetration test at a test pressure of 7.5 psf, the product tested successfully withstood a laboratory positive test pressure of 75 psf and a laboratory negative test pressure of 75 psf, and the product tested passed the laboratory requirements for operational force and forced-entry resistance. Based on this test, all products of the same design that are smaller than the tested size can be labeled with this product performance rating.

IMPORTANT

Building codes prescribe design pressure based on a variety of criteria (i.e., windspeed zone, building height, building type, job site exposure, etc.). Design pressures derived from Performance Grade (PG) test requirements should be used to determine compliance to building code required design pressures. Structural test pressures, which are tested at 1.5 times the design pressure, should **not** be used for determining design pressure code compliance. In the example above, a PG 50 performance grade rating, which passes a 50 psf design pressure, should be used for determining code compliance, not the structural test pressure of 75 psf.

If you need further details about how Andersen® products perform to this standard, contact your Andersen supplier.

If you need further information about the AAMA/WDMA/CSA 101/I.S.2/A440 standard or the Hallmark Certification Program, please contact: WDMA, 2001 K Street NW, 3rd Floor North, Washington, D.C. 20006. Phone: 202-367-1157 Website: **wdma.com**

Where designated, Andersen products are tested, certified and labeled to the requirements of the Hallmark Certification Program. Actual performance may vary based on variations in manufacturing, shipping, installation, environmental conditions and conditions of use.

Performance Grade and Air Infiltration Ratings

For current performance information, please visit **andersenwindows.com**.

Andersen® 400 Series Product	AAMA/WDMA/CSA 101/I.S.2/A440 Performance Grade (PG)	+/- Corresponding Design Pressure (DP)	Air Infiltration CFM/FT²
Casement Windows			
Single Stationary (CXW16 and smaller)	Class LC-PG50 Size Tested 35.9" x 71.9"	50/50	< 0.2
Single Venting (CXW16-155, CX16-155)	Class LC-PG40 Size Tested 35.9" x 71.9"	40/40	< 0.2
Single Venting (CXW15)	Class LC-PG45 Size Tested 71.8" x 59.9"*	45/45	< 0.2
Single Venting (CW16 and smaller)	Class LC-PG50 Size Tested 59.5" x 71.9"	50/50	< 0.2
Single Venting (CXW145 and smaller)	Class LC-PG50 Size Tested 71.8" x 52.9" *	50/50	< 0.2
Single Venting (CX15 and smaller)	Class LC-PG50 Size Tested 62.8" x 59.9" *	50/50	< 0.2
Twin Stationary & Venting (CXW25 and smaller)	Class LC-PG45 Size Tested 71.8" x 59.9"	45/45	< 0.2
Twin Stationary & Venting (CXW245 and smaller)	Class LC-PG50 Size Tested 71.8" x 52.9"	50/50	< 0.2
Twin Stationary & Venting (CX25 and smaller)	Class LC-PG50 Size Tested 62.8" x 59.9"	50/50	< 0.2
Twin Stationary & Venting (CW26 and smaller)	Class LC-PG50 Size Tested 59.5" x 71.9"	50/50	< 0.2
Triple Stationary & Venting (CW35 and smaller)	Class LC-PG40 Size Tested 84.8" x 59.9"	40/40	< 0.2
Triple Stationary & Venting (C35 and smaller)	Class LC-PG50 Size Tested 71.5" x 59.9"	50/50	< 0.2
Casement/Awning Picture Windows (P5060 and smaller)	Class LC-PG50 Size Tested 71.9" x 59.9"	50/50	< 0.2
Casement/Awning Transom Windows (CTR32410 and smaller)	Class LC-PG70 Size Tested 84.6" x 12.0"	70/75	< 0.2
Casement Windows, PG Upgrade			
Single Stationary (tempered glass, CXW16)	Class LC-PG70 Size Tested 35.9" x 71.9"	70/70	< 0.2
Single Venting (CXW145 and smaller)	Class LC-PG70 Size Tested 35.9" x 52.9"	70/70	< 0.2
Single Venting (CX16 and smaller)	Class LC-PG70 Size Tested 31.5" x 71.9"	70/70	< 0.2
Twin Venting (CW26 and smaller)	Class LC-PG70 Size Tested 56.5" x 71.9"	70/70	< 0.2
Triple Venting (C35 and smaller)	Class LC-PG70 Size Tested 71.9" x 59.9"	70/70	< 0.2
Complementary Casement Windows			
Casement Venting	Class LC-PG50 Size Tested 35.9" x 84.0"	50/50	< 0.2
Casement Stationary	Class LC-PG60 Size Tested 120.0" x 78.0"	60/60	< 0.2
French Casement Venting	Class LC-PG30 Size Tested 56.5" x 71.9"	30/30	< 0.2
Awning Windows			
Single Stationary (AXW61 and smaller)	Class LC-PG50 Size Tested 35.9" x 71.9"	50/50	< 0.2
Single Venting (AXW51 and smaller)	Class LC-PG35 Size Tested 59.9" x 35.9"	35/35	< 0.2
Single Venting (AX61 and smaller)	Class LC-PG35 Size Tested 71.8" x 31.5"	35/35	< 0.2
Twin Venting (AXW231 and smaller)	Class LC-PG35 Size Tested 71.8" x 35.9"	35/35	< 0.2
Triple Venting (AX3251 and smaller)	Class LC-PG35 Size Tested 84.7" x 31.5"	35/35	< 0.2
Triple Venting (A313 and smaller)	Class LC-PG35 Size Tested 35.9" x 71.8"	35/35	< 0.2
Picture Venting (PA4060 and smaller)	Class LC-PG35 Size Tested 48.0" x 71.7"	35/35	< 0.2
Awning Windows, PG Upgrade			
Single Stationary (tempered glass, AXW61)	Class LC-PG70 Size Tested 35.9" x 71.9"	70/70	< 0.2
Single, Twin and Triple Venting (AX3251 and smaller)	Class LC-PG60 Size Tested 84.6" x 31.5"	60/60	< 0.2
Triple Venting (A313 and smaller)	Class LC-PG60 Size Tested 35.9" x 71.8"	60/60	< 0.2

continued on next page

- Performance Grade (PG) ratings may vary from tested performance rating for larger or smaller units of a particular type.
- This data is accurate as of December 2024. Due to ongoing product changes, updated test results or new industry standards, this data may change over time.
- Where designated, Andersen products are certified and labeled to the requirements of the Hallmark Certification Program. Actual performance may vary based on variations in manufacturing, shipping, installation, environmental conditions and conditions of use.
- Contact your Andersen supplier for more information.

*Window size tested is an integral twin or triple window, and qualifies the window listed under the same test.

Performance Grade and Air Infiltration Ratings *(continued)*

For current performance information, please visit **andersenwindows.com**.

Andersen® 400 Series Product	AAMA/WDMA/CSA 101/I.S.2/A440 Performance Grade (PG)	+/- Corresponding Design Pressure (DP)	Air Infiltration CFM/FT²
Woodwright® Full-Frame Windows			
Double-Hung (3862 and smaller)	Class LC-PG30 Size Tested 45.6" x 76.9"	30/30	< 0.2
Double-Hung (cottage sash, 3862 and smaller)	Class R-20 Size Tested 45.6" x 76.9"	20/20	< 0.2
Arch Double-Hung (3862 and smaller)	Class LC-PG30 Size Tested 45.6" x 76.9"	30/30	< 0.2
Springline™ Single-Hung (3872 and smaller)	Class LC-PG30 Size Tested 45.6" x 86.9"	30/30	< 0.2
Picture (5662 and smaller)	Class LC-PG65 Size Tested 67.6" x 76.9"	65/65	< 0.2
Transom (6231 and smaller)	Class LC-PG70 Size Tested 75.6" x 39.9"	70/70	< 0.2
Woodwright Full-Frame Windows, PG Upgrade			
Double-Hung (3052 and smaller)	Class LC-PG50 Size Tested 37.6" x 64.9"	50/50	< 0.2
Arch Double-Hung (3054)	Class LC-PG50 Size Tested 37.6" x 64.9"	50/50	< 0.2
Springline Single-Hung (3057)	Class LC-PG50 Size Tested 37.6" x 67.9"	50/50	< 0.2
Woodwright Insert Windows			
Double-Hung (3862 and smaller)	Class R-PG25 Size Tested 45.0" x 77.0"	25/25	< 0.2
Double-Hung (cottage sash, 3862 and smaller)	Class R-PG20 Size Tested 45.0" x 68.0"	20/20	< 0.2
Picture (5662 and smaller)	Class LC-PG30 Size Tested 68.0" x 78.0"	30/30	< 0.2
Transom (6878 and smaller)	Class LC-PG30 Size Tested 68.0" x 78.0"	30/35	< 0.2
Tilt-Wash Full-Frame Windows			
Double-Hung (3862 and smaller)	Class LC-PG40 Size Tested 45.6" x 76.9"	40/40	< 0.2
Double-Hung (cottage sash & reverse cottage sash, 3856 and smaller)	Class LC-PG40 Size Tested 45.6" x 68.9"	40/40	< 0.2
Double-Hung** (3876 and smaller)	Class LC-PG30 Size Tested 45.6" x 92.9"	30/35	< 0.2
Double-Hung** (cottage & reverse cottage sash, greater than 1856 to 3852)	Class LC-PG30 Size Tested 45.6" x 92.9"	30/35	< 0.2
Picture (5662 and smaller)	Class LC-PG50 Size Tested 67.6" x 76.3"	50/65	< 0.2
Transom (6231 and smaller)	Class LC-PG50 Size Tested 75.6" x 39.3"	50/50	< 0.2
Tilt-Wash Windows, PG Upgrade			
Double-Hung	Class LC-PG50 Size Tested 45.6" x 76.9"	50/50	< 0.2
Tilt-Wash Insert Windows			
Double-Hung (double lock)	Class R-PG20 Size Tested 45.6" x 92.9"	20/20	< 0.2
Double-Hung (single lock)	Class R-PG20 Size Tested 35.6" x 92.9"	20/20	< 0.2
Double-Hung	Class LC-PG30 Size Tested 45.6" x 76.9"	30/30	< 0.2
Gliding Windows (G65 and smaller)	Class LC-PG30 Size Tested 71.3" x 59.3"	30/30	< 0.2
Specialty Windows			
Casement/Awning Half Circle	Class LC-PG50 Size Tested 71.9" x 59.9"	50/50	< 0.2
Tilt-Wash Double-Hung Half Circle	Class LC-PG50 Size Tested 75.4" x 40.0"	50/50	< 0.2
Quarter Circle, Circle & Oval	Class LC-PG50 Size Tested 71.9" x 59.9"	50/50	< 0.2
Elliptical	Class LC-PG70 Size Tested 95.3" x 21.0"	70/70	< 0.2
Arch (AFFW6080 and smaller)	Class LC-PG50 Size Tested 71.3" x 105.6"	50/50	< 0.2
Springline (SP802 and smaller)	Class LC-PG50 Size Tested 96.0" x 72.1"	50/50	< 0.2
Springline (SE606 and smaller)	Class LC-PG50 Size Tested 72.0" x 107.9"	50/50	< 0.2
Flexiframe® (8070 and smaller)	Class LC-PG50 Size Tested 96.0" x 84.0"	50/50	< 0.2
Flexiframe (12054 and smaller)	Class LC-PG50 Size Tested 144.0" x 64.4"	50/50	< 0.2

continued on next page

- Performance Grade (PG) ratings may vary from tested performance rating for larger or smaller units of a particular type.
- This data is accurate as of December 2024. Due to ongoing product changes, updated test results or new industry standards, this data may change over time.
- Where designated, Andersen products are certified and labeled to the requirements of the Hallmark Certification Program. Actual performance may vary based on variations in manufacturing, shipping, installation, environmental conditions and conditions of use.
- Contact your Andersen supplier for more information.

**Equal sash windows greater than 6'-4 7/8" (1953 mm) in height and cottage and reverse cottage sash windows greater than 7'-8 7/8" (2359 mm) in height have interior and exterior brackets. Interior brackets, located on each side of the meeting rail, must be flipped up for proper product performance.

Performance Grade and Air Infiltration Ratings *(continued)*

For current performance information, please visit **andersenwindows.com**.

Andersen® 400 Series Product	AAMA/WDMA/CSA 101/I.S.2/A440 Performance Grade (PG)	+/- Corresponding Design Pressure (DP)	Air Infiltration CFM/FT²
Specialty Windows, PG Upgrade			
Arch (tempered glass, AFFW6080 and smaller)	Class LC-PG70 Size Tested 71.3" x 105.6"	70/70	< 0.2
Springline™ (tempered glass, SP802 and smaller)	Class LC-PG70 Size Tested 96.0" x 72.1"	70/70	< 0.2
Springline (tempered glass, SE606 and smaller)	Class LC-PG70 Size Tested 72.0" x 107.9"	70/70	< 0.2
Flexiframe® (tempered glass, 8070 and smaller)	Class LC-PG70 Size Tested 96.0" x 84.0"	70/70	< 0.2
Flexiframe (tempered glass, 12054 and smaller)	Class LC-PG70 Size Tested 144.0" x 64.4"	70/70	< 0.2
Complementary Specialty Windows (direct-set, fixed)	Class LC-PG50 Size Tested 125.0" x 84.0"	50/50	< 0.2
Frenchwood® Gliding Patio Doors			
Single Stationary	Class LC-PG40 Size Tested 50.0" x 95.5"	40/40	< 0.2
Two-Panel	Class LC-PG40 Size Tested 95.3" x 95.5"	40/40	< 0.2
Four-Panel (8')	Class LC-PG35 Size Tested 189.0" x 95.5"	35/35	< 0.2
Four-Panel (6'-11", 6'-8")	Class LC-PG25 Size Tested 189.0" x 82.4"	25/25	< 0.2
Frenchwood Hinged Inswing Patio Doors			
Single Active	Class LC-PG40 Size Tested 107.3" x 95.5"	40/40	< 0.2
Two-Panel	Class LC-PG40 Size Tested 71.5" x 95.5"	40/40	< 0.2
Three-Panel	Class LC-PG40 Size Tested 107.3" x 95.5"	40/40	< 0.2
Frenchwood Patio Door Sidelights	Class LC-PG40 Size Tested 18.9" x 95.5"	40/40	< 0.2
Frenchwood Patio Door Transoms	Class LC-PG40 Size Tested 71.3" x 21.9"	40/40	< 0.2
Complementary Curved Top Patio Doors			
Single Stationary Inswing	Class LC-PG45 Size Tested 38.0" x 95.5"	45/45	< 0.2
Single Active Inswing†	Class LC-PG45 Size Tested 38.0" x 95.5"	45/45	< 0.2
Two-Panel Stationary Inswing	Class LC-PG45 Size Tested 75.3" x 95.5"	45/45	< 0.2
Two-Panel Active Inswing†	Class LC-PG45 Size Tested 75.3" x 95.5"	45/45	< 0.2
Single Stationary Outswing	Class LC-PG45 Size Tested 38.0" x 95.5"	45/45	< 0.2
Single Active Outswing†	Class LC-PG45 Size Tested 38.0" x 95.5"	45/45	< 0.2
Two-Panel Stationary Outswing	Class LC-PG45 Size Tested 75.3" x 95.5"	45/45	< 0.2
Two-Panel Active Outswing†	Class LC-PG45 Size Tested 75.3" x 95.5"	45/45	< 0.2

- Performance Grade (PG) ratings may vary from tested performance rating for larger or smaller units of a particular type.
- This data is accurate as of December 2024. Due to ongoing product changes, updated test results or new industry standards, this data may change over time.
- Where designated, Andersen products are certified and labeled to the requirements of the Hallmark Certification Program. Actual performance may vary based on variations in manufacturing, shipping, installation, environmental conditions and conditions of use.
- Contact your Andersen supplier for more information.

†Tested with standard multi-point hardware.

Sound Transmission Ratings

For current performance information, please visit **andersenwindows.com**.

Andersen® 400 Series Product	Glass Construction	Sound Transmission Class (STC)	Outdoor/Indoor Transmission Class (OITC)
Casement Windows	Dual-Pane	26	22
Awning Windows	Dual-Pane	26	21
Casement/Awning Picture Windows	Dual-Pane	29	25
Complementary Casement Windows	Dual-Pane	†	†
Woodwright® Full-Frame Windows			
Double-Hung	Dual-Pane	28	23
Picture	Dual-Pane	28	23
Transom	Dual-Pane	28	22
Woodwright Insert Windows			
Double-Hung	Dual-Pane	26	21
Picture	Dual-Pane	30	26
Transom	Dual-Pane	30	26
Tilt-Wash Full-Frame Windows			
Double-Hung	Dual-Pane	29	25
Picture	Dual-Pane	30	25
Transom	Dual-Pane	†	†
Tilt-Wash Insert Windows			
Double-Hung	Dual-Pane	27	24
Picture	Dual-Pane	†	†
Transom	Dual-Pane	†	†
Gliding Windows	Dual-Pane	26	22
Specialty Windows	Dual-Pane	30	25
Complementary Specialty Windows	Dual-Pane	28	24
Frenchwood® Gliding Patio Doors			
Single Stationary	Dual-Pane	32	28
	Triple-Pane	31	27
Two-Panel	Dual-Pane	31	26
	Triple-Pane	30	25
Four-Panel	Dual-Pane	†	†
	Triple-Pane	†	†
Frenchwood Hinged Inswing Patio Doors			
Single Active	Dual-Pane	32	28
	Triple-Pane	32	28
Two-Panel	Dual-Pane	31	26
	Triple-Pane	31	26
Three-Panel	Dual-Pane	†	†
	Triple-Pane	†	†
Frenchwood Patio Door Sidelights and Transoms			
Sidleights	Dual-Pane	32	26
	Triple-Pane	†	†
Transoms	Dual-Pane	29	25
	Triple-Pane	†	†
Complementary Curved Top Patio Doors			
Single Active Inswing	Dual-Pane	30	25
Two-Panel Inswing	Dual-Pane	30	25
Single-Panel Outswing	Dual-Pane	31	25
Two-Panel Outswing	Dual-Pane	31	25

- Sound Transmission Class (STC) and Outdoor/Indoor Transmission Class (OITC) ratings are for individual units based on independent tests and represent entire unit.
- This data is accurate as of December 2024. Due to ongoing product changes, updated test results or new industry standards, this data may change over time.
- Contact your Andersen supplier for more information.

†Data not available.

Center of Glass Performance for Products With Dual-Pane Glass

For current performance information, please visit **andersenwindows.com**.

Dual-Pane Glass

Andersen® 400 Series Product	VT[1]	SC[2]	SHGC[3]	RHG[4]	Fading Tuv[5]	Fading Tdw[6]	%RH @ center[7]	IGST[8]
Low-E4®								
Casement, Awning, Tilt-Wash Double-Hung Full-Frame and Insert Windows	73%	0.48	0.42	99	17%	34%	61%	56°F
Gliding Windows	73%	0.48	0.42	99	17%	34%	61%	56°F
Quarter Circle and Circle Windows	73%	0.48	0.42	99	17%	34%	59%	55°F
Woodwright® Double-Hung Full-Frame and Insert Windows	72%	0.48	0.41	99	16%	33%	61%	56°F
Casement/Awning Picture and Transom, Woodwright® Picture and Transom Full-Frame and Insert, Tilt-Wash Picture and Transom Full-Frame and Insert Windows	72%	0.47	0.41	98	16%	33%	59%	55°F
Half Circle, Elliptical and Oval Windows; Frenchwood® Gliding and Hinged Patio Doors; Frenchwood Patio Door Sidelights, Sidelight Transoms and Transoms; Complementary Curved Top Hinged Inswing Patio Doors	72%	0.48	0.41	98	16%	33%	61%	56°F
Flexiframe®, Arch and Springline™ Windows	70%	0.46	0.40	95	14%	31%	61%	56°F
Tilt-Wash Double-Hung Windows With Energy Performance Panel (Factory Applied)	67%	0.48	0.41	98	15%	31%	68%	59°F
Low-E4 With HeatLock® Technology								
Casement, Awning, Tilt-Wash Double-Hung Full-Frame and Insert Windows	71%	0.47	0.41	97	17%	33%	44%	47°F
Gliding Windows	71%	0.47	0.41	97	17%	33%	44%	47°F
Quarter Circle and Circle Windows	71%	0.47	0.41	96	17%	33%	44%	47°F
Woodwright Double-Hung Full-Frame and Insert Windows	70%	0.47	0.41	96	16%	33%	44%	47°F
Casement/Awning Picture and Transom, Woodwright Picture and Transom Full-Frame and Insert, Tilt-Wash Picture and Transom Full-Frame and Insert Windows	70%	0.47	0.40	95	16%	33%	44%	47°F
Half Circle, Elliptical and Oval Windows; Frenchwood Gliding and Hinged Patio Doors; Frenchwood Patio Door Sidelights, Sidelight Transoms and Transoms; Complementary Curved Top Hinged Inswing Patio Doors	70%	0.47	0.41	96	16%	33%	44%	47°F
Flexiframe, Arch and Springline Windows	68%	0.45	0.39	92	14%	31%	44%	47°F
Tilt-Wash Double-Hung Windows With Energy Performance Panel (Factory Applied)	65%	0.46	0.40	95	15%	30%	53%	52°F
Low-E4 SmartSun™								
Casement, Awning, Tilt-Wash Double-Hung Full-Frame and Insert Windows	66%	0.31	0.27	66	5%	22%	61%	56°F
Gliding Windows	66%	0.31	0.27	65	5%	22%	61%	56°F
Quarter Circle and Circle Windows	66%	0.31	0.27	65	5%	22%	61%	56°F
Woodwright Double-Hung Full-Frame and Insert Windows	65%	0.31	0.27	66	5%	21%	61%	56°F
Casement/Awning Picture and Transom, Woodwright Picture and Transom Full-Frame and Insert, Tilt-Wash Picture and Transom Full-Frame and Insert Windows	65%	0.31	0.27	65	5%	21%	61%	56°F
Half Circle, Elliptical and Oval Windows; Frenchwood Gliding and Hinged Patio Doors; Frenchwood Patio Door Sidelights, Sidelight Transoms and Transoms; Complementary Curved Top Hinged Inswing Patio Doors	65%	0.31	0.27	65	5%	21%	61%	56°F
Flexiframe, Arch and Springline Windows	63%	0.31	0.27	65	4%	20%	61%	56°F
Tilt-Wash Double-Hung Windows With Energy Performance Panel (Factory Applied)	60%	0.33	0.29	69	5%	20%	71%	60°F
Low-E4 SmartSun With HeatLock Technology								
Casement, Awning, Tilt-Wash Double-Hung Full-Frame and Insert Windows	64%	0.31	0.27	64	5%	21%	46%	48°F
Gliding Windows	64%	0.31	0.27	64	5%	21%	46%	48°F
Quarter Circle and Circle Windows	64%	0.31	0.27	64	5%	21%	44%	47°F
Woodwright Double-Hung Full-Frame and Insert Windows	63%	0.31	0.27	64	5%	21%	46%	48°F
Casement/Awning Picture and Transom, Woodwright Picture and Transom Full-Frame and Insert, Tilt-Wash Picture and Transom Full-Frame and Insert Windows	63%	0.31	0.27	63	5%	21%	44%	47°F
Half Circle, Elliptical and Oval Windows; Frenchwood Gliding and Hinged Patio Doors; Frenchwood Patio Door Sidelights, Sidelight Transoms and Transoms; Complementary Curved Top Hinged Inswing Patio Doors	63%	0.31	0.27	64	5%	21%	46%	48°F
Flexiframe, Arch and Springline Windows	61%	0.30	0.26	63	4%	20%	46%	48°F
Tilt-Wash Double-Hung Windows With Energy Performance Panel (Factory Applied)	59%	0.32	0.28	66	5%	19%	53%	52°F
Low-E4 Sun								
Casement, Awning, Tilt-Wash Double-Hung Full-Frame and Insert Windows	39%	0.21	0.18	44	2%	13%	61%	56°F
Gliding Windows	39%	0.20	0.18	44	2%	13%	61%	56°F
Quarter Circle and Circle Windows	39%	0.20	0.18	43	2%	13%	61%	56°F
Woodwright Double-Hung Full-Frame and Insert Windows	39%	0.21	0.18	44	2%	13%	61%	56°F
Casement/Awning Picture and Transom, Woodwright Picture and Transom Full-Frame and Insert, Tilt-Wash Picture and Transom Full-Frame and Insert Windows	39%	0.20	0.18	43	2%	13%	61%	56°F
Half Circle, Elliptical and Oval Windows; Frenchwood Gliding and Hinged Patio Doors; Frenchwood Patio Door Sidelights, Sidelight Transoms and Transoms; Complementary Curved Top Hinged Inswing Patio Doors	39%	0.20	0.18	44	2%	13%	61%	56°F
Flexiframe, Arch and Springline Windows	38%	0.21	0.18	44	2%	12%	61%	56°F
Tilt-Wash Double-Hung Windows With Energy Performance Panel (Factory Applied)	36%	0.26	0.22	54	2%	12%	71%	60°F

• Based on NFRC testing/simulation conditions using Windows v7.8.57.0 and NFRC validated spectral data. 0°F outside temperature, 70°F inside temperature and a 12 mph wind. 1) Visible Transmittance (VT) measures how much light comes through the glass. The higher the value, from 0 to 1, the more daylight the glass lets in. Visible Transmittance is measured over the 380-760 nanometer portion of the solar spectrum. 2) Shading Coefficient (SC) defines the amount of heat gain through the glass compared to a single lite of clear ⅛" (3 mm) glass. 3) Solar Heat Gain Coefficient (SHGC) defines the fraction of solar radiation admitted through the glass directly transmitted, as well as absorbed and subsequently released inward. The lower the value, the less heat is transmitted through the product. 4) Relative Heat Gain (RHG) is the amount of heat gain through a glazing incorporating U-Factor and Solar Heat Gain Coefficient. 5) Transmission Ultra-Violet Energy (Tuv). The transmission of short-wave energy in the 300-380 nanometer portion of the solar spectrum. The energy can cause fabric fading. 6) Transmission Damage Function (Tdw). The transmission of UV and visible light energy in the 300-600 nanometer portion of the solar spectrum. The value includes both the UV and visible light energy that can cause fabric fading. This rating has also been referred to as the Krochmann Damage Function. This rating better predicts fading potential than UV transmission alone. The lower the Damage Function rating, the less transmission of short-wave energy through the glass that can potentially cause fabric fading. Fabric type is also a key component of fading potential. 7) Percent relative humidity before condensation occurs at the center of glass, taken using center of glass temperature. 8) Inside glass surface temperatures are taken at the center of glass.

continued on next page

• This data is accurate as of December 2024. Due to ongoing product changes, updated test results or new industry standards, this data may change over time. Contact your Andersen supplier for current performance information or upgrade options.

• Contact your Andersen supplier for center of glass performance data on windows with patterned glass, tempered glass and products ordered with capillary breather tubes.

Center of Glass Performance for Products With Dual-Pane Glass *(continued)*

For current performance information, please visit **andersenwindows.com**.

	Andersen® 400 Series Product	VT[1]	SC[2]	SHGC[3]	RHG[4]	Fading Tuv[5]	Fading Tdw[6]	%RH @ center[7]	IGST[8]
Dual-Pane Glass	**Low-E4® PassiveSun®**								
	Casement, Awning, Tilt-Wash Double-Hung Full-Frame and Insert Windows	80%	0.80	0.70	164	31%	43%	59%	55°F
	Gliding Windows	80%	0.80	0.70	164	31%	43%	59%	55°F
	Quarter Circle and Circle Windows	80%	0.80	0.70	164	31%	43%	59%	55°F
	Woodwright® Double-Hung Full-Frame and Insert Windows	79%	0.79	0.69	161	29%	42%	59%	55°F
	Casement/Awning Picture and Transom, Woodwright® Picture and Transom Full-Frame and Insert, Tilt-Wash Picture and Transom Full-Frame and Insert Windows	79%	0.79	0.69	161	29%	42%	59%	55°F
	Half Circle, Elliptical and Oval Windows; Frenchwood® Gliding and Hinged Patio Doors; Frenchwood Patio Door Sidelights, Sidelight Transoms and Transoms; Complementary Curved Top Hinged Inswing Patio Doors	79%	0.79	0.69	161	29%	42%	59%	55°F
	Flexiframe®, Arch and Springline™ Windows	77%	0.74	0.64	151	24%	38%	59%	55°F
	Tilt-Wash Double-Hung Windows With Energy Performance Panel (Factory Applied)	74%	0.73	0.63	148	27%	39%	68%	59°F
	Low-E4 PassiveSun With HeatLock® Technology								
	Casement, Awning, Tilt-Wash Double-Hung Full-Frame and Insert Windows	78%	0.73	0.63	148	29%	42%	42%	46°F
	Gliding Windows	78%	0.73	0.63	149	29%	42%	42%	46°F
	Quarter Circle and Circle Windows	78%	0.73	0.64	149	29%	42%	42%	46°F
	Woodwright Double-Hung Full-Frame and Insert Windows	77%	0.72	0.62	146	27%	40%	42%	46°F
	Casement/Awning Picture and Transom, Woodwright Picture and Transom Full-Frame and Insert, Tilt-Wash Picture and Transom Full-Frame and Insert Windows	77%	0.72	0.62	146	27%	40%	42%	46°F
	Half Circle, Elliptical and Oval Windows; Frenchwood Gliding and Hinged Patio Doors; Frenchwood Patio Door Sidelights, Sidelight Transoms and Transoms; Complementary Curved Top Hinged Inswing Patio Doors	77%	0.72	0.62	146	27%	40%	42%	46°F
	Flexiframe, Arch and Springline Windows	75%	0.67	0.58	136	23%	37%	44%	47°F
	Tilt-Wash Double-Hung Windows With Energy Performance Panel (Factory Applied)	72%	0.67	0.58	137	25%	38%	51%	51°F

• Based on NFRC testing/simulation conditions using Windows v7.8.57.0 and NFRC validated spectral data. 0°F outside temperature, 70°F inside temperature and a 12 mph wind. 1) Visible Transmittance (VT) measures how much light comes through the glass. The higher the value, from 0 to 1, the more daylight the glass lets in. Visible Transmittance is measured over the 380-760 nanometer portion of the solar spectrum. 2) Shading Coefficient (SC) defines the amount of heat gain through the glass compared to a single lite of clear $^1/_8$" (3 mm) glass. 3) Solar Heat Gain Coefficient (SHGC) defines the fraction of solar radiation admitted through the glass directly transmitted, as well as absorbed and subsequently released inward. The lower the value, the less heat is transmitted through the product. 4) Relative Heat Gain (RHG) is the amount of heat gain through a glazing incorporating U-Factor and Solar Heat Gain Coefficient. 5) Transmission Ultra-Violet Energy (Tuv). The transmission of short-wave energy in the 300-380 nanometer portion of the solar spectrum. The energy can cause fabric fading. 6) Transmission Damage Function (Tdw). The transmission of UV and visible light energy in the 300-600 nanometer portion of the solar spectrum. The value includes both the UV and visible light energy that can cause fabric fading. This rating has also been referred to as the Krochmann Damage Function. This rating better predicts fading potential than UV transmission alone. The lower the Damage Function rating, the less transmission of short-wave energy through the glass that can potentially cause fabric fading. Fabric type is also a key component of fading potential. 7) Percent relative humidity before condensation occurs at the center of glass, taken using center of glass temperature. 8) Inside glass surface temperatures are taken at the center of glass.
• This data is accurate as of December 2024. Due to ongoing product changes, updated test results or new industry standards, this data may change over time. Contact your Andersen supplier for current performance information or upgrade options.
• Contact your Andersen supplier for center of glass performance data on windows with patterned glass, tempered glass and products ordered with capillary breather tubes.

Center of Glass Performance for Products With Triple-Pane Glass

For current performance information, please visit **andersenwindows.com**.

	Andersen® 400 Series Product	VT[1]	SC[2]	SHGC[3]	RHG[4]	Fading Tuv[5]	Fading Tdw[6]	%RH @ center[7]	IGST[8]
Triple-Pane Glass	**Low-E4®**								
	Frenchwood® Gliding and Hinged Patio Doors; Frenchwood Patio Door Sidelights, Sidelight Transoms and Transoms	66%	0.44	0.38	92	14%	30%	63%	57°F
	Low-E4 Enhanced								
	Frenchwood Gliding and Hinged Patio Doors; Frenchwood Patio Door Sidelights, Sidelight Transoms and Transoms	63%	0.43	0.37	88	8%	24%	71%	60°F
	Low-E4 Enhanced With HeatLock® Technology								
	Frenchwood Gliding and Hinged Patio Doors; Frenchwood Patio Door Sidelights, Sidelight Transoms and Transoms	62%	0.41	0.36	84	8%	23%	55%	53°F
	Low-E4 SmartSun™								
	Frenchwood Gliding and Hinged Patio Doors; Frenchwood Patio Door Sidelights, Sidelight Transoms and Transoms	59%	0.29	0.25	62	4%	19%	66%	58°F
	Low-E4 SmartSun Enhanced								
	Frenchwood Gliding and Hinged Patio Doors; Frenchwood Patio Door Sidelights, Sidelight Transoms and Transoms	57%	0.28	0.25	59	2%	16%	71%	60°F
	Low-E4 SmartSun With HeatLock Technology								
	Frenchwood Gliding and Hinged Patio Doors; Frenchwood Patio Door Sidelights, Sidelight Transoms and Transoms	56%	0.27	0.24	57	2%	16%	55%	53°F

• Based on NFRC testing/simulation conditions using Windows v7.8.57.0 and NFRC validated spectral data. 0°F outside temperature, 70°F inside temperature and a 12 mph wind. 1) Visible Transmittance (VT) measures how much light comes through the glass. The higher the value, from 0 to 1, the more daylight the glass lets in. Visible Transmittance is measured over the 380-760 nanometer portion of the solar spectrum. 2) Shading Coefficient (SC) defines the amount of heat gain through the glass compared to a single lite of clear $^1/_8$" (3 mm) glass. 3) Solar Heat Gain Coefficient (SHGC) defines the fraction of solar radiation admitted through the glass directly transmitted, as well as absorbed and subsequently released inward. The lower the value, the less heat is transmitted through the product. 4) Relative Heat Gain (RHG) is the amount of heat gain through a glazing incorporating U-Factor and Solar Heat Gain Coefficient. 5) Transmission Ultra-Violet Energy (Tuv). The transmission of short-wave energy in the 300-380 nanometer portion of the solar spectrum. The energy can cause fabric fading. 6) Transmission Damage Function (Tdw). The transmission of UV and visible light energy in the 300-600 nanometer portion of the solar spectrum. The value includes both the UV and visible light energy that can cause fabric fading. This rating has also been referred to as the Krochmann Damage Function. This rating better predicts fading potential than UV transmission alone. The lower the Damage Function rating, the less transmission of short-wave energy through the glass that can potentially cause fabric fading. Fabric type is also a key component of fading potential. 7) Percent relative humidity before condensation occurs at the center of glass, taken using center of glass temperature. 8) Inside glass surface temperatures are taken at the center of glass.
• This data is accurate as of December 2024. Due to ongoing product changes, updated test results or new industry standards, this data may change over time. Contact your Andersen supplier for current performance information or upgrade options.
• Contact your Andersen supplier for center of glass performance data on windows with patterned glass, tempered glass and products ordered with capillary breather tubes.

NFRC Certified Total Unit Performance for Products With Dual-Pane Glass

This information is for reference only. Performance values vary based on unit size, configurations and options. Contact your Andersen supplier for specific unit data.

Andersen® Product	High-Performance Dual-Pane Glass Type		U-Factor[1]	SHGC[2]	VT[3]
400 Series Casement Windows AND-N-1	Low-E4®	Without Grilles	0.29	0.32	0.54
		Simulated Divided Light Grilles	0.29	0.29	0.49
		Finelight™ Grilles	0.30	0.29	0.49
		Energy Spacer Divided Light Grilles	0.28	0.29	0.50
		Full Divided Light Grilles	0.29	0.29	0.49
	Low-E4 w/HeatLock®	Without Grilles	0.25	0.31	0.53
		Simulated Divided Light Grilles	0.25	0.28	0.48
		Finelight Grilles	0.26	0.28	0.48
		Energy Spacer Divided Light Grilles	0.24	0.29	0.48
		Full Divided Light Grilles	0.26	0.28	0.48
	Low-E4 Sun	Without Grilles	0.29	0.20	0.30
		Simulated Divided Light Grilles	0.29	0.18	0.27
		Finelight Grilles	0.30	0.18	0.27
		Energy Spacer Divided Light Grilles	0.28	0.18	0.28
		Full Divided Light Grilles	0.30	0.18	0.27
	Low-E4 SmartSun™	Without Grilles	0.28	0.21	0.49
		Simulated Divided Light Grilles	0.28	0.20	0.44
		Finelight Grilles	0.29	0.20	0.44
		Energy Spacer Divided Light Grilles	0.27	0.19	0.45
		Full Divided Light Grilles	0.29	0.20	0.44
	Low-E4 SmartSun w/HeatLock	Without Grilles	0.25	0.21	0.47
		Simulated Divided Light Grilles	0.25	0.19	0.43
		Finelight Grilles	0.25	0.19	0.43
		Energy Spacer Divided Light Grilles	0.24	0.19	0.44
		Full Divided Light Grilles	0.26	0.19	0.43
	Low-E4 PassiveSun® w/HeatLock	Without Grilles	0.26	0.47	0.58
		Simulated Divided Light Grilles	0.25	0.44	0.53
		Finelight Grilles	0.25	0.44	0.53
		Energy Spacer Divided Light Grilles	0.25	0.44	0.53
		Full Divided Light Grilles	0.27	0.44	0.53
400 Series Awning Windows AND-N-2	Low-E4®	Without Grilles	0.29	0.31	0.53
		Simulated Divided Light Grilles	0.29	0.29	0.48
		Finelight™ Grilles	0.29	0.29	0.48
		Energy Spacer Divided Light Grilles	0.28	0.29	0.49
		Full Divided Light Grilles	0.29	0.29	0.48
	Low-E4 w/HeatLock®	Without Grilles	0.26	0.30	0.52
		Simulated Divided Light Grilles	0.26	0.28	0.47
		Finelight Grilles	0.26	0.28	0.47
		Energy Spacer Divided Light Grilles	0.25	0.29	0.48
		Full Divided Light Grilles	0.27	0.28	0.47
	Low-E4 Sun	Without Grilles	0.29	0.19	0.29
		Simulated Divided Light Grilles	0.29	0.18	0.27
		Finelight Grilles	0.30	0.18	0.27
		Energy Spacer Divided Light Grilles	0.29	0.18	0.27
		Full Divided Light Grilles	0.30	0.18	0.27
	Low-E4 SmartSun™	Without Grilles	0.28	0.21	0.48
		Simulated Divided Light Grilles	0.28	0.19	0.43
		Finelight Grilles	0.29	0.19	0.43
		Energy Spacer Divided Light Grilles	0.28	0.19	0.45
		Full Divided Light Grilles	0.29	0.19	0.43
	Low-E4 SmartSun w/HeatLock	Without Grilles	0.25	0.20	0.47
		Simulated Divided Light Grilles	0.25	0.19	0.42
		Finelight Grilles	0.25	0.19	0.42
		Energy Spacer Divided Light Grilles	0.24	0.19	0.43
		Full Divided Light Grilles	0.26	0.19	0.42
	Low-E4 PassiveSun® w/HeatLock	Without Grilles	0.26	0.47	0.58
		Simulated Divided Light Grilles	0.26	0.43	0.53
		Finelight Grilles	0.27	0.43	0.53
		Energy Spacer Divided Light Grilles	0.26	0.44	0.53
		Full Divided Light Grilles	0.28	0.43	0.53

Andersen® Product	High-Performance Dual-Pane Glass Type		U-Factor[1]	SHGC[2]	VT[3]
400 Series Casement/Awning Picture and Transom Windows AND-N-54	Low-E4®	Without Grilles	0.27	0.34	0.60
		Simulated Divided Light Grilles	0.27	0.31	0.53
		Finelight™ Grilles	0.27	0.31	0.53
		Energy Spacer Divided Light Grilles	0.27	0.31	0.53
		Full Divided Light Grilles	0.28	0.31	0.53
	Low-E4 w/HeatLock®	Without Grilles	0.22	0.34	0.58
		Simulated Divided Light Grilles	0.22	0.31	0.52
		Finelight Grilles	0.22	0.31	0.52
		Energy Spacer Divided Light Grilles	0.22	0.31	0.52
		Full Divided Light Grilles	0.25	0.31	0.52
	Low-E4 Sun	Without Grilles	0.27	0.21	0.33
		Simulated Divided Light Grilles	0.27	0.19	0.30
		Finelight Grilles	0.27	0.19	0.30
		Energy Spacer Divided Light Grilles	0.27	0.19	0.30
		Full Divided Light Grilles	0.29	0.19	0.30
	Low-E4 SmartSun™	Without Grilles	0.26	0.23	0.54
		Simulated Divided Light Grilles	0.26	0.21	0.48
		Finelight Grilles	0.26	0.21	0.48
		Energy Spacer Divided Light Grilles	0.26	0.21	0.48
		Full Divided Light Grilles	0.28	0.21	0.48
	Low-E4 SmartSun w/HeatLock	Without Grilles	0.22	0.22	0.52
		Simulated Divided Light Grilles	0.22	0.20	0.47
		Finelight Grilles	0.22	0.20	0.47
		Energy Spacer Divided Light Grilles	0.22	0.20	0.47
		Full Divided Light Grilles	0.24	0.20	0.47
	Low-E4 PassiveSun® w/HeatLock	Without Grilles	0.23	0.52	0.64
		Simulated Divided Light Grilles	0.23	0.47	0.57
		Finelight Grilles	0.23	0.47	0.57
		Energy Spacer Divided Light Grilles	0.23	0.47	0.57
		Full Divided Light Grilles	0.25	0.47	0.57
400 Series Complementary Casement Windows AND-N-107	Low-E4®	Without Grilles	0.30	0.28	0.47
		Simulated Divided Light Grilles	0.30	0.25	0.42
		Finelight™ Grilles	0.31	0.25	0.42
		Full Divided Light Grilles	0.31	0.25	0.42
	Low-E4 w/HeatLock®	Without Grilles	0.27	0.27	0.46
		Simulated Divided Light Grilles	0.27	0.25	0.41
		Finelight Grilles	0.27	0.25	0.41
		Full Divided Light Grilles	0.28	0.25	0.41
	Low-E4 Sun	Without Grilles	0.30	0.17	0.26
		Simulated Divided Light Grilles	0.30	0.16	0.23
		Finelight Grilles	0.31	0.16	0.23
		Full Divided Light Grilles	0.31	0.16	0.23
	Low-E4 SmartSun™	Without Grilles	0.30	0.18	0.42
		Simulated Divided Light Grilles	0.30	0.17	0.38
		Finelight Grilles	0.30	0.17	0.38
		Full Divided Light Grilles	0.30	0.17	0.38
	Low-E4 SmartSun w/HeatLock	Without Grilles	0.26	0.18	0.41
		Simulated Divided Light Grilles	0.26	0.17	0.37
		Finelight Grilles	0.26	0.17	0.37
		Full Divided Light Grilles	0.28	0.17	0.37
	Low-E4 PassiveSun® w/HeatLock	Without Grilles	0.27	0.41	0.50
		Simulated Divided Light Grilles	0.27	0.37	0.45
		Finelight Grilles	0.27	0.37	0.45
		Full Divided Light Grilles	0.28	0.37	0.45

continued on next page

• "Low-E4®," "Low-E4® SmartSun™," "Low-E4® Sun," "Low-E4® PassiveSun®" and "HeatLock®" are Andersen trademarks for "Low-E" glass.
1) U-Factor defines the amount of heat loss through the total unit in BTU/hr-ft²-°F. The lower the value, the less heat is lost through the entire product. Window values represent non-tempered glass. Use of tempered glass can increase U-Factor ratings. See nfrc.org for specific performance values. Door values represent tempered glass. 2) Solar Heat Gain Coefficient (SHGC) defines the fraction of solar radiation admitted through the glass directly transmitted, as well as absorbed and subsequently released inward. The lower the value, the less heat is transmitted through the product. 3) Visible Transmittance (VT) measures how much light comes through a product (glass and frame). The higher the value, from 0 to 1, the more daylight the product lets in over the product's total unit area. Visible Light Transmittance is measured over the 380-760 nanometer portion of the solar spectrum.
• NFRC ratings are based on modeling by a third-party agency as validated by an independent test lab in compliance with NFRC program and procedural requirements.
• This data is accurate as of December 2024. Due to ongoing product changes, updated test results, or new industry standards or requirements, this data may change over time. Ratings are for sizes specified by NFRC for testing and certification. Ratings may vary depending on use of tempered glass, different grille options, glass with capillary breather tubes for high altitudes, etc.
• Values are for single units with given pane thickness, stainless steel glass spacers and ¾" (19 mm) grilles for windows and patio door products.

NFRC Certified Total Unit Performance for Products With Dual-Pane Glass *(continued)*

This information is for reference only. Performance values vary based on unit size, configurations and options.
Contact your Andersen supplier for specific unit data.

Andersen® Product	High-Performance Dual-Pane Glass Type		U-Factor[1]	SHGC[2]	VT[3]
400 Series Woodwright® Double-Hung Full-Frame Windows AND-N-66	Low-E4®	Without Grilles	0.29	0.31	0.53
		Simulated Divided Light Grilles	0.29	0.28	0.47
		Finelight™ Grilles	0.29	0.28	0.47
		Energy Spacer Divided Light Grilles	0.29	0.28	0.47
		Full Divided Light Grilles	0.30	0.28	0.47
	Low-E4 w/HeatLock®	Without Grilles	0.25	0.30	0.51
		Simulated Divided Light Grilles	0.25	0.27	0.46
		Finelight Grilles	0.25	0.27	0.46
		Energy Spacer Divided Light Grilles	0.25	0.27	0.46
		Full Divided Light Grilles	0.28	0.27	0.46
	Low-E4 Sun	Without Grilles	0.29	0.19	0.29
		Simulated Divided Light Grilles	0.29	0.17	0.26
		Finelight Grilles	0.29	0.17	0.26
		Energy Spacer Divided Light Grilles	0.29	0.17	0.26
		Full Divided Light Grilles	0.31	0.17	0.25
	Low-E4 SmartSun™	Without Grilles	0.29	0.20	0.47
		Simulated Divided Light Grilles	0.29	0.18	0.42
		Finelight Grilles	0.29	0.18	0.42
		Energy Spacer Divided Light Grilles	0.29	0.18	0.42
		Full Divided Light Grilles	0.30	0.18	0.42
	Low-E4 SmartSun w/HeatLock	Without Grilles	0.25	0.20	0.46
		Simulated Divided Light Grilles	0.25	0.18	0.41
		Finelight Grilles	0.25	0.18	0.41
		Energy Spacer Divided Light Grilles	0.25	0.18	0.41
		Full Divided Light Grilles	0.27	0.18	0.41
	Low-E4 PassiveSun® w/HeatLock	Without Grilles	0.26	0.46	0.57
		Simulated Divided Light Grilles	0.26	0.41	0.50
		Finelight Grilles	0.26	0.41	0.50
		Energy Spacer Divided Light Grilles	0.26	0.41	0.50
		Full Divided Light Grilles	0.28	0.41	0.50
400 Series Woodwright® Picture Full-Frame Windows AND-N-67	Low-E4®	Without Grilles	0.27	0.32	0.55
		Simulated Divided Light Grilles	0.27	0.29	0.49
		Finelight™ Grilles	0.27	0.29	0.49
		Energy Spacer Divided Light Grilles	0.27	0.29	0.49
		Full Divided Light Grilles	0.28	0.29	0.49
	Low-E4 w/HeatLock®	Without Grilles	0.23	0.31	0.54
		Simulated Divided Light Grilles	0.23	0.28	0.48
		Finelight Grilles	0.23	0.28	0.48
		Energy Spacer Divided Light Grilles	0.23	0.28	0.48
		Full Divided Light Grilles	0.25	0.28	0.48
	Low-E4 Sun	Without Grilles	0.27	0.20	0.31
		Simulated Divided Light Grilles	0.27	0.18	0.27
		Finelight Grilles	0.27	0.18	0.27
		Energy Spacer Divided Light Grilles	0.27	0.18	0.27
		Full Divided Light Grilles	0.29	0.18	0.27
	Low-E4 SmartSun™	Without Grilles	0.26	0.21	0.50
		Simulated Divided Light Grilles	0.26	0.19	0.44
		Finelight Grilles	0.26	0.19	0.44
		Energy Spacer Divided Light Grilles	0.26	0.19	0.44
		Full Divided Light Grilles	0.28	0.19	0.44
	Low-E4 SmartSun w/HeatLock	Without Grilles	0.22	0.21	0.48
		Simulated Divided Light Grilles	0.22	0.19	0.43
		Finelight Grilles	0.22	0.19	0.43
		Energy Spacer Divided Light Grilles	0.22	0.19	0.43
		Full Divided Light Grilles	0.25	0.19	0.43
	Low-E4 PassiveSun® w/HeatLock	Without Grilles	0.23	0.48	0.59
		Simulated Divided Light Grilles	0.23	0.43	0.53
		Finelight Grilles	0.23	0.43	0.53
		Energy Spacer Divided Light Grilles	0.23	0.43	0.53
		Full Divided Light Grilles	0.26	0.43	0.53

Andersen® Product	High-Performance Dual-Pane Glass Type		U-Factor[1]	SHGC[2]	VT[3]
400 Series Woodwright® Transom Full-Frame Windows AND-N-68	Low-E4®	Without Grilles	0.27	0.33	0.57
		Simulated Divided Light Grilles	0.27	0.30	0.51
		Finelight™ Grilles	0.27	0.30	0.51
		Energy Spacer Divided Light Grilles	0.27	0.30	0.51
		Full Divided Light Grilles	0.29	0.30	0.51
	Low-E4 w/HeatLock®	Without Grilles	0.23	0.33	0.56
		Simulated Divided Light Grilles	0.23	0.29	0.50
		Finelight Grilles	0.23	0.29	0.50
		Energy Spacer Divided Light Grilles	0.23	0.29	0.50
		Full Divided Light Grilles	0.25	0.29	0.50
	Low-E4 Sun	Without Grilles	0.28	0.20	0.32
		Simulated Divided Light Grilles	0.28	0.18	0.29
		Finelight Grilles	0.28	0.18	0.29
		Energy Spacer Divided Light Grilles	0.27	0.18	0.29
		Full Divided Light Grilles	0.29	0.18	0.29
	Low-E4 SmartSun™	Without Grilles	0.27	0.22	0.52
		Simulated Divided Light Grilles	0.26	0.20	0.46
		Finelight Grilles	0.27	0.20	0.46
		Energy Spacer Divided Light Grilles	0.26	0.20	0.46
		Full Divided Light Grilles	0.28	0.20	0.46
	Low-E4 SmartSun w/HeatLock	Without Grilles	0.22	0.22	0.50
		Simulated Divided Light Grilles	0.22	0.20	0.45
		Finelight Grilles	0.22	0.20	0.45
		Energy Spacer Divided Light Grilles	0.22	0.20	0.45
		Full Divided Light Grilles	0.25	0.20	0.45
	Low-E4 PassiveSun® w/HeatLock	Without Grilles	0.23	0.50	0.62
		Simulated Divided Light Grilles	0.23	0.45	0.55
		Finelight Grilles	0.23	0.45	0.55
		Energy Spacer Divided Light Grilles	0.23	0.45	0.55
		Full Divided Light Grilles	0.26	0.45	0.55
400 Series Woodwright® Double-Hung Insert Windows AND-N-74	Low-E4®	Without Grilles	0.30	0.31	0.53
		Simulated Divided Light Grilles	0.30	0.28	0.47
		Finelight™ Grilles	0.30	0.28	0.47
		Energy Spacer Divided Light Grilles	0.30	0.28	0.47
		Full Divided Light Grilles	0.31	0.28	0.47
	Low-E4 w/HeatLock®	Without Grilles	0.26	0.30	0.52
		Simulated Divided Light Grilles	0.26	0.27	0.46
		Finelight Grilles	0.26	0.27	0.46
		Energy Spacer Divided Light Grilles	0.26	0.27	0.46
		Full Divided Light Grilles	0.28	0.27	0.46
	Low-E4 Sun	Without Grilles	0.30	0.19	0.30
		Simulated Divided Light Grilles	0.30	0.17	0.26
		Finelight Grilles	0.30	0.17	0.26
		Energy Spacer Divided Light Grilles	0.31	0.17	0.26
		Full Divided Light Grilles	0.31	0.17	0.26
	Low-E4 SmartSun™	Without Grilles	0.29	0.21	0.48
		Simulated Divided Light Grilles	0.29	0.19	0.43
		Finelight Grilles	0.29	0.19	0.43
		Energy Spacer Divided Light Grilles	0.30	0.19	0.43
		Full Divided Light Grilles	0.31	0.19	0.43
	Low-E4 SmartSun w/HeatLock	Without Grilles	0.26	0.20	0.47
		Simulated Divided Light Grilles	0.26	0.18	0.42
		Finelight Grilles	0.26	0.18	0.42
		Energy Spacer Divided Light Grilles	0.26	0.18	0.42
		Full Divided Light Grilles	0.28	0.18	0.42
	Low-E4 PassiveSun® w/HeatLock	Without Grilles	0.27	0.47	0.57
		Simulated Divided Light Grilles	0.27	0.42	0.51
		Finelight Grilles	0.27	0.42	0.51
		Energy Spacer Divided Light Grilles	0.27	0.42	0.51
		Full Divided Light Grilles	0.29	0.42	0.51

continued on next page

• "Low-E4®," "Low-E4® SmartSun™," "Low-E4® Sun," "Low-E4® PassiveSun®" and "HeatLock®" are Andersen trademarks for "Low-E" glass.
1) U-Factor defines the amount of heat loss through the total unit in BTU/hr-ft²-°F. The lower the value, the less heat is lost through the entire product. Window values represent non-tempered glass. Use of tempered glass can increase U-Factor ratings. See nfrc.org for specific performance values. Door values represent tempered glass. 2) Solar Heat Gain Coefficient (SHGC) defines the fraction of solar radiation admitted through the glass directly transmitted, as well as absorbed and subsequently released inward. The lower the value, the less heat is transmitted through the product. 3) Visible Transmittance (VT) measures how much light comes through a product (glass and frame). The higher the value, from 0 to 1, the more daylight the product lets in over the product's total unit area. Visible Light Transmittance is measured over the 380-760 nanometer portion of the solar spectrum.
• NFRC ratings are based on modeling by a third-party agency as validated by an independent test lab in compliance with NFRC program and procedural requirements.
• This data is accurate as of December 2024. Due to ongoing product changes, updated test results, or new industry standards or requirements, this data may change over time. Ratings are for sizes specified by NFRC for testing and certification. Ratings may vary depending on use of tempered glass, different grille options, glass with capillary breather tubes for high altitudes, etc.
• Values are for single units with given pane thickness, stainless steel glass spacers and 3/4" (19 mm) grilles for windows and patio door products.

NFRC Certified Total Unit Performance for Products With Dual-Pane Glass *(continued)*

This information is for reference only. Performance values vary based on unit size, configurations and options.
Contact your Andersen supplier for specific unit data.

Andersen® Product	High-Performance Dual-Pane Glass Type		U-Factor[1]	SHGC[2]	VT[3]
400 Series Woodwright® Picture Insert Windows AND-N-77	Low-E4®	Without Grilles	0.29	0.32	0.55
		Simulated Divided Light Grilles	0.29	0.29	0.49
		Finelight™ Grilles	0.29	0.29	0.49
		Energy Spacer Divided Light Grilles	0.29	0.29	0.49
		Full Divided Light Grilles	0.30	0.29	0.49
	Low-E4 w/HeatLock®	Without Grilles	0.24	0.32	0.54
		Simulated Divided Light Grilles	0.24	0.29	0.48
		Finelight Grilles	0.24	0.29	0.48
		Energy Spacer Divided Light Grilles	0.24	0.29	0.48
		Full Divided Light Grilles	0.27	0.29	0.48
	Low-E4 Sun	Without Grilles	0.29	0.20	0.31
		Simulated Divided Light Grilles	0.29	0.18	0.27
		Finelight Grilles	0.29	0.18	0.27
		Energy Spacer Divided Light Grilles	0.29	0.18	0.27
		Full Divided Light Grilles	0.30	0.18	0.27
	Low-E4 SmartSun™	Without Grilles	0.28	0.21	0.50
		Simulated Divided Light Grilles	0.28	0.19	0.44
		Finelight Grilles	0.28	0.19	0.44
		Energy Spacer Divided Light Grilles	0.28	0.19	0.44
		Full Divided Light Grilles	0.30	0.19	0.44
	Low-E4 SmartSun w/HeatLock	Without Grilles	0.24	0.21	0.49
		Simulated Divided Light Grilles	0.24	0.19	0.43
		Finelight Grilles	0.24	0.19	0.43
		Energy Spacer Divided Light Grilles	0.24	0.19	0.43
		Full Divided Light Grilles	0.26	0.19	0.43
	Low-E4 PassiveSun® w/HeatLock	Without Grilles	0.25	0.49	0.60
		Simulated Divided Light Grilles	0.25	0.44	0.53
		Finelight Grilles	0.25	0.44	0.53
		Energy Spacer Divided Light Grilles	0.25	0.44	0.53
		Full Divided Light Grilles	0.27	0.44	0.53
400 Series Woodwright® Transom Insert Windows AND-N-78	Low-E4®	Without Grilles	0.29	0.33	0.56
		Simulated Divided Light Grilles	0.29	0.30	0.50
		Finelight™ Grilles	0.29	0.30	0.50
		Energy Spacer Divided Light Grilles	0.29	0.30	0.50
		Full Divided Light Grilles	0.30	0.30	0.50
	Low-E4 w/HeatLock®	Without Grilles	0.24	0.32	0.55
		Simulated Divided Light Grilles	0.24	0.29	0.49
		Finelight Grilles	0.24	0.29	0.49
		Energy Spacer Divided Light Grilles	0.25	0.29	0.49
		Full Divided Light Grilles	0.27	0.29	0.49
	Low-E4 Sun	Without Grilles	0.29	0.20	0.31
		Simulated Divided Light Grilles	0.29	0.18	0.28
		Finelight Grilles	0.29	0.18	0.28
		Energy Spacer Divided Light Grilles	0.29	0.30	0.50
		Full Divided Light Grilles	0.31	0.18	0.28
	Low-E4 SmartSun™	Without Grilles	0.28	0.22	0.51
		Simulated Divided Light Grilles	0.28	0.20	0.45
		Finelight Grilles	0.28	0.20	0.45
		Energy Spacer Divided Light Grilles	0.28	0.20	0.45
		Full Divided Light Grilles	0.30	0.20	0.45
	Low-E4 SmartSun w/HeatLock	Without Grilles	0.24	0.21	0.50
		Simulated Divided Light Grilles	0.24	0.19	0.44
		Finelight Grilles	0.24	0.19	0.44
		Energy Spacer Divided Light Grilles	0.24	0.19	0.44
		Full Divided Light Grilles	0.26	0.19	0.44
	Low-E4 PassiveSun® w/HeatLock	Without Grilles	0.25	0.49	0.60
		Simulated Divided Light Grilles	0.25	0.44	0.54
		Finelight Grilles	0.27	0.43	0.53
		Energy Spacer Divided Light Grilles	0.25	0.44	0.54
		Full Divided Light Grilles	0.28	0.44	0.54

Andersen® Product	High-Performance Dual-Pane Glass Type		U-Factor[1]	SHGC[2]	VT[3]
400 Series Woodwright® Springline™ Single-Hung and Arch Double-Hung Windows AND-N-111	Low-E4®	Without Grilles	0.28	0.30	0.52
		Simulated Divided Light Grilles	0.28	0.27	0.46
		Finelight™ Grilles	0.29	0.27	0.46
		Energy Spacer Divided Light Grilles	0.29	0.27	0.46
		Full Divided Light Grilles	0.30	0.27	0.46
	Low-E4 w/HeatLock®	Without Grilles	0.24	0.30	0.51
		Simulated Divided Light Grilles	0.25	0.27	0.45
		Finelight Grilles	0.26	0.27	0.45
		Energy Spacer Divided Light Grilles	0.25	0.27	0.45
		Full Divided Light Grilles	0.27	0.27	0.45
	Low-E4 Sun	Without Grilles	0.29	0.19	0.29
		Simulated Divided Light Grilles	0.29	0.17	0.26
		Finelight Grilles	0.30	0.17	0.26
		Energy Spacer Divided Light Grilles	0.29	0.17	0.26
		Full Divided Light Grilles	0.30	0.17	0.26
	Low-E4 SmartSun™	Without Grilles	0.28	0.20	0.47
		Simulated Divided Light Grilles	0.27	0.18	0.42
		Finelight Grilles	0.29	0.18	0.42
		Energy Spacer Divided Light Grilles	0.28	0.18	0.42
		Full Divided Light Grilles	0.29	0.18	0.42
	Low-E4 SmartSun w/HeatLock	Without Grilles	0.24	0.20	0.46
		Simulated Divided Light Grilles	0.24	0.18	0.41
		Finelight Grilles	0.25	0.18	0.41
		Energy Spacer Divided Light Grilles	0.24	0.18	0.41
		Full Divided Light Grilles	0.26	0.18	0.41
	Low-E4 PassiveSun® w/HeatLock	Without Grilles	0.25	0.46	0.56
		Simulated Divided Light Grilles	0.25	0.41	0.50
		Finelight Grilles	0.26	0.41	0.50
		Energy Spacer Divided Light Grilles	0.25	0.41	0.50
		Full Divided Light Grilles	0.27	0.41	0.50
400 Series Tilt-Wash Double-Hung Full-Frame Windows AND-N-24	Low-E4®	Without Grilles	0.30	0.31	0.53
		Simulated Divided Light Grilles	0.30	0.28	0.47
		Finelight™ Grilles	0.32	0.28	0.47
		Energy Spacer Divided Light Grilles	0.29	0.28	0.48
		Full Divided Light Grilles	0.31	0.28	0.47
	Low-E4 w/HeatLock®	Without Grilles	0.27	0.30	0.52
		Simulated Divided Light Grilles	0.27	0.27	0.46
		Finelight Grilles	0.28	0.27	0.46
		Energy Spacer Divided Light Grilles	0.26	0.28	0.47
		Full Divided Light Grilles	0.28	0.27	0.46
	Low-E4 Sun	Without Grilles	0.31	0.19	0.29
		Simulated Divided Light Grilles	0.31	0.17	0.26
		Finelight Grilles	0.32	0.17	0.26
		Energy Spacer Divided Light Grilles	0.30	0.17	0.27
		Full Divided Light Grilles	0.31	0.17	0.26
	Low-E4 SmartSun™	Without Grilles	0.30	0.21	0.48
		Simulated Divided Light Grilles	0.29	0.19	0.42
		Finelight Grilles	0.31	0.19	0.42
		Energy Spacer Divided Light Grilles	0.29	0.19	0.43
		Full Divided Light Grilles	0.30	0.19	0.42
	Low-E4 SmartSun w/HeatLock	Without Grilles	0.26	0.20	0.47
		Simulated Divided Light Grilles	0.26	0.18	0.41
		Finelight Grilles	0.27	0.18	0.41
		Energy Spacer Divided Light Grilles	0.25	0.18	0.42
		Full Divided Light Grilles	0.28	0.18	0.41
	Low-E4 PassiveSun® w/HeatLock	Without Grilles	0.27	0.46	0.57
		Simulated Divided Light Grilles	0.27	0.41	0.51
		Finelight Grilles	0.28	0.41	0.51
		Energy Spacer Divided Light Grilles	0.26	0.42	0.51
		Full Divided Light Grilles	0.29	0.41	0.51

continued on next page

• "Low-E4®," "Low-E4® SmartSun™," "Low-E4® Sun," "Low-E4® PassiveSun®" and "HeatLock®" are Andersen trademarks for "Low-E" glass.
1) U-Factor defines the amount of heat loss through the total unit in BTU/hr-ft²-°F. The lower the value, the less heat is lost through the entire product. Window values represent non-tempered glass. Use of tempered glass can increase U-Factor ratings. See nfrc.org for specific performance values. Door values represent tempered glass. 2) Solar Heat Gain Coefficient (SHGC) defines the fraction of solar radiation admitted through the glass directly transmitted, as well as absorbed and subsequently released inward. The lower the value, the less heat is transmitted through the product. 3) Visible Transmittance (VT) measures how much light comes through a product (glass and frame). The higher the value, from 0 to 1, the more daylight the product lets in over the product's total unit area. Visible Light Transmittance is measured over the 380-760 nanometer portion of the solar spectrum.
• NFRC ratings are based on modeling by a third-party agency as validated by an independent test lab in compliance with NFRC program and procedural requirements.
• This data is accurate as of December 2024. Due to ongoing product changes, updated test results, or new industry standards or requirements, this data may change over time. Ratings are for sizes specified by NFRC for testing and certification. Ratings may vary depending on use of tempered glass, different grille options, glass with capillary breather tubes for high altitudes, etc.
• Values are for single units with given pane thickness, stainless steel glass spacers and ¾" (19 mm) grilles for windows and patio door products.

NFRC Certified Total Unit Performance for Products With Dual-Pane Glass *(continued)*

This information is for reference only. Performance values vary based on unit size, configurations and options.
Contact your Andersen supplier for specific unit data.

Andersen® Product	High-Performance Dual-Pane Glass Type		U-Factor[1]	SHGC[2]	VT[3]
400 Series Tilt-Wash Picture Full-Frame Windows AND-N-27	Low-E4®	Without Grilles	0.29	0.33	0.57
		Simulated Divided Light Grilles	0.29	0.30	0.51
		Finelight™ Grilles	0.29	0.30	0.51
		Energy Spacer Divided Light Grilles	0.29	0.30	0.51
		Full Divided Light Grilles	0.31	0.30	0.51
	Low-E4 w/HeatLock®	Without Grilles	0.25	0.32	0.56
		Simulated Divided Light Grilles	0.25	0.29	0.50
		Finelight Grilles	0.25	0.29	0.50
		Energy Spacer Divided Light Grilles	0.25	0.29	0.50
		Full Divided Light Grilles	0.28	0.29	0.50
	Low-E4 Sun	Without Grilles	0.29	0.20	0.32
		Simulated Divided Light Grilles	0.29	0.18	0.28
		Finelight Grilles	0.29	0.18	0.28
		Energy Spacer Divided Light Grilles	0.29	0.18	0.28
		Full Divided Light Grilles	0.31	0.18	0.28
	Low-E4 SmartSun™	Without Grilles	0.28	0.22	0.51
		Simulated Divided Light Grilles	0.28	0.20	0.46
		Finelight Grilles	0.28	0.20	0.46
		Energy Spacer Divided Light Grilles	0.28	0.20	0.46
		Full Divided Light Grilles	0.30	0.20	0.46
	Low-E4 SmartSun w/HeatLock	Without Grilles	0.24	0.21	0.50
		Simulated Divided Light Grilles	0.24	0.19	0.45
		Finelight Grilles	0.24	0.19	0.45
		Energy Spacer Divided Light Grilles	0.24	0.19	0.45
		Full Divided Light Grilles	0.27	0.19	0.45
	Low-E4 PassiveSun® w/HeatLock	Without Grilles	0.26	0.50	0.61
		Simulated Divided Light Grilles	0.26	0.45	0.55
		Finelight Grilles	0.26	0.45	0.55
		Energy Spacer Divided Light Grilles	0.26	0.45	0.55
		Full Divided Light Grilles	0.28	0.45	0.55
400 Series Tilt-Wash Transom Full-Frame Windows AND-N-76	Low-E4®	Without Grilles	0.27	0.32	0.55
		Simulated Divided Light Grilles	0.27	0.29	0.49
		Finelight™ Grilles	0.27	0.29	0.49
		Energy Spacer Divided Light Grilles	0.27	0.29	0.49
		Full Divided Light Grilles	0.28	0.29	0.49
	Low-E4 w/HeatLock®	Without Grilles	0.22	0.31	0.54
		Simulated Divided Light Grilles	0.22	0.28	0.48
		Finelight Grilles	0.22	0.28	0.48
		Energy Spacer Divided Light Grilles	0.23	0.28	0.48
		Full Divided Light Grilles	0.25	0.28	0.48
	Low-E4 Sun	Without Grilles	0.27	0.19	0.31
		Simulated Divided Light Grilles	0.27	0.18	0.27
		Finelight Grilles	0.27	0.18	0.27
		Energy Spacer Divided Light Grilles	0.27	0.18	0.27
		Full Divided Light Grilles	0.28	0.18	0.27
	Low-E4 SmartSun™	Without Grilles	0.26	0.21	0.49
		Simulated Divided Light Grilles	0.26	0.19	0.44
		Finelight Grilles	0.26	0.19	0.44
		Energy Spacer Divided Light Grilles	0.26	0.19	0.44
		Full Divided Light Grilles	0.28	0.19	0.44
	Low-E4 SmartSun w/HeatLock	Without Grilles	0.22	0.21	0.48
		Simulated Divided Light Grilles	0.22	0.19	0.43
		Finelight Grilles	0.22	0.19	0.43
		Energy Spacer Divided Light Grilles	0.22	0.19	0.43
		Full Divided Light Grilles	0.25	0.19	0.43
	Low-E4 PassiveSun® w/HeatLock	Without Grilles	0.23	0.48	0.59
		Simulated Divided Light Grilles	0.23	0.43	0.53
		Finelight Grilles	0.23	0.43	0.53
		Energy Spacer Divided Light Grilles	0.23	0.43	0.53
		Full Divided Light Grilles	0.26	0.43	0.53

Andersen® Product	High-Performance Dual-Pane Glass Type		U-Factor[1]	SHGC[2]	VT[3]
400 Series Narroline® Double-Hung Window Conversion Kit AND-N-101	Low-E4®	Without Grilles	0.31	0.31	0.53
		Simulated Divided Light Grilles	0.31	0.28	0.47
		Finelight™ Grilles	0.32	0.28	0.47
		Energy Spacer Divided Light Grilles	0.30	0.28	0.47
		Full Divided Light Grilles	0.32	0.28	0.47
	Low-E4 w/HeatLock®	Without Grilles	0.27	0.30	0.52
		Simulated Divided Light Grilles	0.27	0.27	0.46
		Finelight Grilles	0.28	0.27	0.46
		Energy Spacer Divided Light Grilles	0.26	0.27	0.46
		Full Divided Light Grilles	0.29	0.27	0.46
	Low-E4 Sun	Without Grilles	0.31	0.19	0.29
		Simulated Divided Light Grilles	0.31	0.17	0.26
		Finelight Grilles	0.32	0.17	0.26
		Energy Spacer Divided Light Grilles	0.30	0.17	0.26
		Full Divided Light Grilles	0.32	0.17	0.26
	Low-E4 SmartSun™	Without Grilles	0.30	0.21	0.48
		Simulated Divided Light Grilles	0.31	0.19	0.42
		Finelight Grilles	0.29	0.19	0.43
		Energy Spacer Divided Light Grilles	0.29	0.19	0.43
		Full Divided Light Grilles	0.31	0.19	0.42
	Low-E4 SmartSun w/HeatLock	Without Grilles	0.26	0.20	0.46
		Simulated Divided Light Grilles	0.26	0.18	0.41
		Finelight Grilles	0.27	0.18	0.41
		Energy Spacer Divided Light Grilles	0.26	0.18	0.42
		Full Divided Light Grilles	0.28	0.18	0.41
	Low-E4 PassiveSun® w/HeatLock	Without Grilles	0.27	0.46	0.57
		Simulated Divided Light Grilles	0.27	0.41	0.51
		Finelight Grilles	0.28	0.41	0.51
		Energy Spacer Divided Light Grilles	0.27	0.42	0.51
		Full Divided Light Grilles	0.29	0.41	0.51
400 Series Tilt-Wash Double-Hung Insert Windows AND-N-132	Low-E4®	Without Grilles	0.31	0.31	0.53
		Simulated Divided Light Grilles	0.31	0.28	0.47
		Finelight™ Grilles	0.32	0.28	0.47
		Energy Spacer Divided Light Grilles	0.32	0.28	0.47
		Full Divided Light Grilles	0.32	0.28	0.47
	Low-E4 w/HeatLock®	Without Grilles	0.27	0.31	0.52
		Simulated Divided Light Grilles	0.27	0.28	0.46
		Finelight Grilles	0.28	0.28	0.46
		Energy Spacer Divided Light Grilles	0.28	0.28	0.46
		Full Divided Light Grilles	0.29	0.28	0.46
	Low-E4 Sun	Without Grilles	0.31	0.19	0.30
		Simulated Divided Light Grilles	0.31	0.18	0.26
		Finelight Grilles	0.32	0.18	0.26
		Energy Spacer Divided Light Grilles	0.32	0.18	0.26
		Full Divided Light Grilles	0.32	0.18	0.26
	Low-E4 SmartSun™	Without Grilles	0.30	0.21	0.48
		Simulated Divided Light Grilles	0.30	0.19	0.43
		Finelight Grilles	0.31	0.19	0.43
		Energy Spacer Divided Light Grilles	0.31	0.19	0.43
		Full Divided Light Grilles	0.31	0.19	0.43
	Low-E4 SmartSun w/HeatLock	Without Grilles	0.27	0.20	0.47
		Simulated Divided Light Grilles	0.27	0.19	0.42
		Finelight Grilles	0.28	0.19	0.42
		Energy Spacer Divided Light Grilles	0.28	0.19	0.42
		Full Divided Light Grilles	0.29	0.19	0.42
	Low-E4 PassiveSun® w/HeatLock	Without Grilles	0.31	0.46	0.58
		Simulated Divided Light Grilles	0.31	0.42	0.51
		Finelight Grilles	0.32	0.42	0.51
		Energy Spacer Divided Light Grilles	0.30	0.42	0.52
		Full Divided Light Grilles	0.33	0.42	0.51

continued on next page

• "Low-E4®," "Low-E4® SmartSun™," "Low-E4® Sun," "Low-E4® PassiveSun®" and "HeatLock®" are Andersen trademarks for "Low-E" glass.
1) U-Factor defines the amount of heat loss through the total unit in BTU/hr-ft²-°F. The lower the value, the less heat is lost through the entire product. Window values represent non-tempered glass. Use of tempered glass can increase U-Factor ratings. See nfrc.org for specific performance values. Door values represent tempered glass. 2) Solar Heat Gain Coefficient (SHGC) defines the fraction of solar radiation admitted through the glass directly transmitted, as well as absorbed and subsequently released inward. The lower the value, the less heat is transmitted through the product. 3) Visible Transmittance (VT) measures how much light comes through a product (glass and frame). The higher the value, from 0 to 1, the more daylight the product lets in over the product's total unit area. Visible Light Transmittance is measured over the 380-760 nanometer portion of the solar spectrum.
• NFRC ratings are based on modeling by a third-party agency as validated by an independent test lab in compliance with NFRC program and procedural requirements.
• This data is accurate as of December 2024. Due to ongoing product changes, updated test results, or new industry standards or requirements, this data may change over time. Ratings are for sizes specified by NFRC for testing and certification. Ratings may vary depending on use of tempered glass, different grille options, glass with capillary breather tubes for high altitudes, etc.
• Values are for single units with given pane thickness, stainless steel glass spacers and ¾" (19 mm) grilles for windows and patio door products.

NFRC Certified Total Unit Performance for Products With Dual-Pane Glass *(continued)*

This information is for reference only. Performance values vary based on unit size, configurations and options.
Contact your Andersen supplier for specific unit data.

Andersen® Product	High-Performance Dual-Pane Glass Type		U-Factor[1]	SHGC[2]	VT[3]
400 Series Tilt-Wash Picture Insert Windows AND-N-133	Low-E4®	Without Grilles	0.29	0.32	0.55
		Simulated Divided Light Grilles	0.29	0.29	0.49
		Finelight™ Grilles	0.29	0.29	0.49
		Energy Spacer Divided Light Grilles	0.29	0.29	0.49
		Full Divided Light Grilles	0.30	0.29	0.49
	Low-E4 w/HeatLock®	Without Grilles	0.24	0.32	0.54
		Simulated Divided Light Grilles	0.24	0.29	0.48
		Finelight Grilles	0.24	0.29	0.48
		Energy Spacer Divided Light Grilles	0.24	0.29	0.48
		Full Divided Light Grilles	0.27	0.29	0.48
	Low-E4 Sun	Without Grilles	0.29	0.20	0.31
		Simulated Divided Light Grilles	0.29	0.18	0.27
		Finelight Grilles	0.29	0.18	0.27
		Energy Spacer Divided Light Grilles	0.29	0.18	0.27
		Full Divided Light Grilles	0.30	0.18	0.27
	Low-E4 SmartSun™	Without Grilles	0.28	0.21	0.50
		Simulated Divided Light Grilles	0.28	0.19	0.44
		Finelight Grilles	0.28	0.19	0.44
		Energy Spacer Divided Light Grilles	0.28	0.19	0.44
		Full Divided Light Grilles	0.29	0.19	0.44
	Low-E4 SmartSun w/HeatLock	Without Grilles	0.24	0.21	0.49
		Simulated Divided Light Grilles	0.24	0.19	0.43
		Finelight Grilles	0.24	0.19	0.43
		Energy Spacer Divided Light Grilles	0.24	0.19	0.43
		Full Divided Light Grilles	0.26	0.19	0.43
	Low-E4 PassiveSun® w/HeatLock	Without Grilles	0.27	0.48	0.60
		Simulated Divided Light Grilles	0.27	0.43	0.53
		Finelight Grilles	0.27	0.43	0.53
		Energy Spacer Divided Light Grilles	0.27	0.43	0.53
		Full Divided Light Grilles	0.30	0.43	0.53
400 Series Tilt-Wash Transom Insert Windows AND-N-134	Low-E4®	Without Grilles	0.29	0.33	0.56
		Simulated Divided Light Grilles	0.29	0.30	0.50
		Finelight™ Grilles	0.29	0.30	0.50
		Energy Spacer Divided Light Grilles	0.29	0.30	0.50
		Full Divided Light Grilles	0.30	0.30	0.50
	Low-E4 w/HeatLock®	Without Grilles	0.24	0.32	0.55
		Simulated Divided Light Grilles	0.24	0.29	0.49
		Finelight Grilles	0.24	0.29	0.49
		Energy Spacer Divided Light Grilles	0.24	0.29	0.49
		Full Divided Light Grilles	0.27	0.29	0.49
	Low-E4 Sun	Without Grilles	0.29	0.20	0.31
		Simulated Divided Light Grilles	0.29	0.18	0.28
		Finelight Grilles	0.29	0.18	0.28
		Energy Spacer Divided Light Grilles	0.29	0.18	0.28
		Full Divided Light Grilles	0.31	0.18	0.28
	Low-E4 SmartSun™	Without Grilles	0.28	0.22	0.51
		Simulated Divided Light Grilles	0.28	0.20	0.45
		Finelight Grilles	0.28	0.20	0.45
		Energy Spacer Divided Light Grilles	0.28	0.20	0.45
		Full Divided Light Grilles	0.30	0.20	0.45
	Low-E4 SmartSun w/HeatLock	Without Grilles	0.24	0.21	0.50
		Simulated Divided Light Grilles	0.24	0.19	0.44
		Finelight Grilles	0.24	0.19	0.44
		Energy Spacer Divided Light Grilles	0.24	0.19	0.44
		Full Divided Light Grilles	0.26	0.19	0.44
	Low-E4 PassiveSunv w/HeatLock	Without Grilles	0.27	0.49	0.61
		Simulated Divided Light Grilles	0.27	0.44	0.54
		Finelight Grilles	0.27	0.44	0.54
		Energy Spacer Divided Light Grilles	0.27	0.43	0.54
		Full Divided Light Grilles	0.30	0.43	0.54

Andersen® Product	High-Performance Dual-Pane Glass Type		U-Factor[1]	SHGC[2]	VT[3]
400 Series Gliding Windows AND-N-19	Low-E4®	Without Grilles	0.30	0.29	0.50
		Simulated Divided Light Grilles	0.30	0.26	0.44
		Finelight™ Grilles	0.30	0.26	0.44
		Energy Spacer Divided Light Grilles	0.30	0.26	0.44
		Full Divided Light Grilles	0.31	0.26	0.44
	Low-E4 w/HeatLock®	Without Grilles	0.27	0.28	0.48
		Simulated Divided Light Grilles	0.27	0.25	0.43
		Finelight Grilles	0.27	0.25	0.43
		Energy Spacer Divided Light Grilles	0.27	0.25	0.43
		Full Divided Light Grilles	0.28	0.25	0.43
	Low-E4 Sun	Without Grilles	0.31	0.18	0.27
		Simulated Divided Light Grilles	0.31	0.16	0.24
		Finelight Grilles	0.31	0.16	0.24
		Energy Spacer Divided Light Grilles	0.31	0.16	0.24
		Full Divided Light Grilles	0.32	0.16	0.24
	Low-E4 SmartSun™	Without Grilles	0.30	0.19	0.45
		Simulated Divided Light Grilles	0.30	0.17	0.39
		Finelight Grilles	0.30	0.17	0.39
		Energy Spacer Divided Light Grilles	0.30	0.17	0.39
		Full Divided Light Grilles	0.31	0.17	0.39
	Low-E4 SmartSun w/HeatLock	Without Grilles	0.26	0.19	0.44
		Simulated Divided Light Grilles	0.26	0.17	0.39
		Finelight Grilles	0.26	0.17	0.39
		Energy Spacer Divided Light Grilles	0.26	0.17	0.39
		Full Divided Light Grilles	0.28	0.17	0.39
	Low-E4 PassiveSun® w/HeatLock	Without Grilles	0.27	0.43	0.53
		Simulated Divided Light Grilles	0.27	0.38	0.47
		Finelight Grilles	0.27	0.38	0.47
		Energy Spacer Divided Light Grilles	0.27	0.38	0.47
		Full Divided Light Grilles	0.29	0.38	0.47
400 Series Half Circle Windows Casement (CTC) AND-N-147	Low-E4®	Without Grilles	0.27	0.35	0.60
		Simulated Divided Light Grilles	0.27	0.32	0.53
		Finelight™ Grilles	0.27	0.31	0.53
		Energy Spacer Divided Light Grilles	0.27	0.31	0.53
		Full Divided Light Grilles	0.28	0.31	0.53
	Low-E4 w/HeatLock®	Without Grilles	0.22	0.34	0.58
		Simulated Divided Light Grilles	0.22	0.31	0.52
		Finelight Grilles	0.22	0.31	0.52
		Energy Spacer Divided Light Grilles	0.22	0.31	0.52
		Full Divided Light Grilles	0.25	0.31	0.52
	Low-E4 Sun	Without Grilles	0.27	0.21	0.33
		Simulated Divided Light Grilles	0.27	0.19	0.30
		Finelight Grilles	0.27	0.19	0.30
		Energy Spacer Divided Light Grilles	0.27	0.19	0.30
		Full Divided Light Grilles	0.29	0.19	0.30
	Low-E4 SmartSun™	Without Grilles	0.26	0.23	0.54
		Simulated Divided Light Grilles	0.26	0.21	0.48
		Finelight Grilles	0.26	0.21	0.48
		Energy Spacer Divided Light Grilles	0.26	0.21	0.48
		Full Divided Light Grilles	0.27	0.21	0.48
	Low-E4 SmartSun w/HeatLock	Without Grilles	0.22	0.22	0.52
		Simulated Divided Light Grilles	0.22	0.20	0.47
		Finelight Grilles	0.22	0.20	0.47
		Energy Spacer Divided Light Grilles	0.22	0.20	0.47
		Full Divided Light Grilles	0.24	0.20	0.47
	Low-E4 PassiveSun® w/HeatLock	Without Grilles	0.25	0.52	0.64
		Simulated Divided Light Grilles	0.25	0.47	0.57
		Finelight Grilles	0.25	0.47	0.57
		Energy Spacer Divided Light Grilles	0.25	0.47	0.57
		Full Divided Light Grilles	0.25	0.47	0.57

continued on next page

• "Low-E4®," "Low-E4® SmartSun™," "Low-E4® Sun," "Low-E4® PassiveSun®" and "HeatLock®" are Andersen trademarks for "Low-E" glass.
1) U-Factor defines the amount of heat loss through the total unit in BTU/hr-ft²-°F. The lower the value, the less heat is lost through the entire product. Window values represent non-tempered glass. Use of tempered glass can increase U-Factor ratings. See nfrc.org for specific performance values. Door values represent tempered glass. 2) Solar Heat Gain Coefficient (SHGC) defines the fraction of solar radiation admitted through the glass directly transmitted, as well as absorbed and subsequently released inward. The lower the value, the less heat is transmitted through the product. 3) Visible Transmittance (VT) measures how much light comes through a product (glass and frame). The higher the value, from 0 to 1, the more daylight the product lets in over the product's total unit area. Visible Light Transmittance is measured over the 380-760 nanometer portion of the solar spectrum.
• NFRC ratings are based on modeling by a third-party agency as validated by an independent test lab in compliance with NFRC program and procedural requirements.
• This data is accurate as of December 2024. Due to ongoing product changes, updated test results, or new industry standards or requirements, this data may change over time. Ratings are for sizes specified by NFRC for testing and certification. Ratings may vary depending on use of tempered glass, different grille options, glass with capillary breather tubes for high altitudes, etc.
• Values are for single units with given pane thickness, stainless steel glass spacers and ¾" (19 mm) grilles for windows and patio door products.

NFRC Certified Total Unit Performance for Products With Dual-Pane Glass *(continued)*

This information is for reference only. Performance values vary based on unit size, configurations and options.
Contact your Andersen supplier for specific unit data.

Andersen® Product	High-Performance Dual-Pane Glass Type		U-Factor[1]	SHGC[2]	VT[3]
400 Series Half Circle Windows Double-Hung (CTN) AND-N-7	Low-E4®	Without Grilles	0.27	0.34	0.58
		Simulated Divided Light Grilles	0.27	0.27	0.46
		Finelight™ Grilles	0.27	0.30	0.52
		Energy Spacer Divided Light Grilles	0.27	0.30	0.52
		Full Divided Light Grilles	0.28	0.30	0.52
	Low-E4 w/HeatLock®	Without Grilles	0.23	0.33	0.57
		Simulated Divided Light Grilles	0.23	0.30	0.51
		Finelight Grilles	0.23	0.30	0.51
		Energy Spacer Divided Light Grilles	0.23	0.30	0.51
		Full Divided Light Grilles	0.25	0.30	0.51
	Low-E4 Sun	Without Grilles	0.27	0.21	0.32
		Simulated Divided Light Grilles	0.27	0.19	0.29
		Finelight Grilles	0.27	0.19	0.29
		Energy Spacer Divided Light Grilles	0.27	0.19	0.29
		Full Divided Light Grilles	0.29	0.19	0.29
	Low-E4 SmartSun™	Without Grilles	0.26	0.22	0.52
		Simulated Divided Light Grilles	0.26	0.20	0.47
		Finelight Grilles	0.26	0.20	0.47
		Energy Spacer Divided Light Grilles	0.26	0.20	0.47
		Full Divided Light Grilles	0.28	0.20	0.47
	Low-E4 SmartSun w/HeatLock	Without Grilles	0.22	0.22	0.51
		Simulated Divided Light Grilles	0.22	0.20	0.46
		Finelight Grilles	0.22	0.20	0.46
		Energy Spacer Divided Light Grilles	0.22	0.20	0.46
		Full Divided Light Grilles	0.20	0.25	0.46
	Low-E4 PassiveSun® w/HeatLock	Without Grilles	0.23	0.51	0.63
		Simulated Divided Light Grilles	0.23	0.46	0.56
		Finelight Grilles	0.23	0.46	0.56
		Energy Spacer Divided Light Grilles	0.23	0.46	0.56
		Full Divided Light Grilles	0.26	0.46	0.56
400 Series Circle and Oval Windows AND-N-148	Low-E4®	Without Grilles	0.27	0.35	0.60
		Simulated Divided Light Grilles	0.27	0.31	0.53
		Finelight™ Grilles	0.27	0.31	0.53
		Energy Spacer Divided Light Grilles	0.27	0.31	0.53
		Full Divided Light Grilles	0.28	0.31	0.53
	Low-E4 w/HeatLock®	Without Grilles	0.22	0.34	0.58
		Simulated Divided Light Grilles	0.22	0.31	0.52
		Finelight Grilles	0.22	0.31	0.52
		Energy Spacer Divided Light Grilles	0.22	0.31	0.52
		Full Divided Light Grilles	0.25	0.31	0.52
	Low-E4 Sun	Without Grilles	0.27	0.21	0.33
		Simulated Divided Light Grilles	0.27	0.19	0.30
		Finelight Grilles	0.27	0.19	0.30
		Energy Spacer Divided Light Grilles	0.27	0.19	0.30
		Full Divided Light Grilles	0.29	0.19	0.30
	Low-E4 SmartSun™	Without Grilles	0.26	0.23	0.54
		Simulated Divided Light Grilles	0.26	0.21	0.48
		Finelight Grilles	0.26	0.21	0.48
		Energy Spacer Divided Light Grilles	0.26	0.21	0.48
		Full Divided Light Grilles	0.28	0.21	0.48
	Low-E4 SmartSun w/HeatLock	Without Grilles	0.22	0.22	0.52
		Simulated Divided Light Grilles	0.22	0.20	0.47
		Finelight Grilles	0.22	0.20	0.47
		Energy Spacer Divided Light Grilles	0.22	0.20	0.47
		Full Divided Light Grilles	0.24	0.20	0.47
	Low-E4 PassiveSun® w/HeatLock	Without Grilles	0.25	0.51	0.64
		Simulated Divided Light Grilles	0.25	0.46	0.57
		Finelight Grilles	0.25	0.46	0.57
		Energy Spacer Divided Light Grilles	0.26	0.45	0.57
		Full Divided Light Grilles	0.29	0.45	0.57

Andersen® Product	High-Performance Dual-Pane Glass Type		U-Factor[1]	SHGC[2]	VT[3]
400 Series Elliptical Windows AND-N-16	Low-E4®	Without Grilles	0.27	0.34	0.59
		Simulated Divided Light Grilles	0.27	0.31	0.53
		Finelight™ Grilles	0.27	0.31	0.53
		Energy Spacer Divided Light Grilles	0.27	0.31	0.53
		Full Divided Light Grilles	0.29	0.31	0.53
	Low-E4 w/HeatLock®	Without Grilles	0.23	0.34	0.58
		Simulated Divided Light Grilles	0.23	0.30	0.52
		Finelight Grilles	0.23	0.30	0.52
		Energy Spacer Divided Light Grilles	0.23	0.30	0.52
		Full Divided Light Grilles	0.25	0.30	0.52
	Low-E4 Sun	Without Grilles	0.28	0.21	0.33
		Simulated Divided Light Grilles	0.28	0.19	0.29
		Finelight Grilles	0.28	0.19	0.29
		Energy Spacer Divided Light Grilles	0.28	0.19	0.29
		Full Divided Light Grilles	0.29	0.19	0.29
	Low-E4 SmartSun™	Without Grilles	0.27	0.23	0.53
		Simulated Divided Light Grilles	0.27	0.21	0.48
		Finelight Grilles	0.27	0.21	0.48
		Energy Spacer Divided Light Grilles	0.27	0.21	0.48
		Full Divided Light Grilles	0.28	0.21	0.48
	Low-E4 SmartSun w/HeatLock	Without Grilles	0.22	0.22	0.52
		Simulated Divided Light Grilles	0.22	0.20	0.46
		Finelight Grilles	0.22	0.20	0.46
		Energy Spacer Divided Light Grilles	0.22	0.20	0.46
		Full Divided Light Grilles	0.25	0.20	0.46
	Low-E4 PassiveSun® w/HeatLock	Without Grilles	0.26	0.64	0.64
		Simulated Divided Light Grilles	0.26	0.51	0.57
		Finelight Grilles	0.26	0.46	0.57
		Energy Spacer Divided Light Grilles	0.26	0.46	0.57
		Full Divided Light Grilles	0.26	0.46	0.57
400 Series Arch Windows AND-N-18	Low-E4®	Without Grilles	0.27	0.33	0.58
		Simulated Divided Light Grilles	0.27	0.30	0.52
		Finelight™ Grilles	0.27	0.30	0.52
		Energy Spacer Divided Light Grilles	0.27	0.30	0.52
		Full Divided Light Grilles	0.28	0.30	0.52
	Low-E4 w/HeatLock®	Without Grilles	0.23	0.32	0.56
		Simulated Divided Light Grilles	0.23	0.29	0.50
		Finelight Grilles	0.23	0.29	0.50
		Energy Spacer Divided Light Grilles	0.23	0.29	0.50
		Full Divided Light Grilles	0.25	0.29	0.50
	Low-E4 Sun	Without Grilles	0.27	0.20	0.31
		Simulated Divided Light Grilles	0.27	0.18	0.28
		Finelight Grilles	0.27	0.18	0.28
		Energy Spacer Divided Light Grilles	0.27	0.18	0.28
		Full Divided Light Grilles	0.29	0.18	0.28
	Low-E4 SmartSun™	Without Grilles	0.26	0.23	0.52
		Simulated Divided Light Grilles	0.26	0.21	0.46
		Finelight Grilles	0.26	0.21	0.46
		Energy Spacer Divided Light Grilles	0.26	0.21	0.46
		Full Divided Light Grilles	0.28	0.21	0.46
	Low-E4 SmartSun w/HeatLock	Without Grilles	0.22	0.22	0.51
		Simulated Divided Light Grilles	0.22	0.20	0.45
		Finelight Grilles	0.22	0.20	0.45
		Energy Spacer Divided Light Grilles	0.22	0.20	0.45
		Full Divided Light Grilles	0.24	0.20	0.45
	Low-E4 PassiveSun® w/HeatLock	Without Grilles	0.23	0.48	0.62
		Simulated Divided Light Grilles	0.23	0.43	0.55
		Finelight Grilles	0.23	0.43	0.55
		Energy Spacer Divided Light Grilles	0.23	0.43	0.55
		Full Divided Light Grilles	0.26	0.43	0.55

continued on next page

• "Low-E4®," "Low-E4® SmartSun™," "Low-E4® Sun," "Low-E4® PassiveSun®" and "HeatLock®" are Andersen trademarks for "Low-E" glass.
1) U-Factor defines the amount of heat loss through the total unit in BTU/hr-ft²-°F. The lower the value, the less heat is lost through the entire product. Window values represent non-tempered glass. Use of tempered glass can increase U-Factor ratings. See nfrc.org for specific performance values. Door values represent tempered glass. 2) Solar Heat Gain Coefficient (SHGC) defines the fraction of solar radiation admitted through the glass directly transmitted, as well as absorbed and subsequently released inward. The lower the value, the less heat is transmitted through the product. 3) Visible Transmittance (VT) measures how much light comes through a product (glass and frame). The higher the value, from 0 to 1, the more daylight the product lets in over the product's total unit area. Visible Light Transmittance is measured over the 380-760 nanometer portion of the solar spectrum.
• NFRC ratings are based on modeling by a third-party agency as validated by an independent test lab in compliance with NFRC program and procedural requirements.
• This data is accurate as of December 2024. Due to ongoing product changes, updated test results, or new industry standards or requirements, this data may change over time. Ratings are for sizes specified by NFRC for testing and certification. Ratings may vary depending on use of tempered glass, different grille options, glass with capillary breather tubes for high altitudes, etc.
• Values are for single units with given pane thickness, stainless steel glass spacers and ¾" (19 mm) grilles for windows and patio door products.

NFRC Certified Total Unit Performance for Products With Dual-Pane Glass *(continued)*

This information is for reference only. Performance values vary based on unit size, configurations and options.
Contact your Andersen supplier for specific unit data.

Andersen® Product	High-Performance Dual-Pane Glass Type		U-Factor[1]	SHGC[2]	VT[3]
400 Series Springline™ Windows AND-N-25	Low-E4®	Without Grilles	0.28	0.33	0.57
		Simulated Divided Light Grilles	0.28	0.30	0.51
		Finelight™ Grilles	0.28	0.30	0.51
		Energy Spacer Divided Light Grilles	0.28	0.30	0.51
		Full Divided Light Grilles	0.29	0.30	0.51
	Low-E4 w/HeatLock®	Without Grilles	0.24	0.32	0.56
		Simulated Divided Light Grilles	0.24	0.29	0.50
		Finelight Grilles	0.24	0.29	0.50
		Energy Spacer Divided Light Grilles	0.24	0.29	0.50
		Full Divided Light Grilles	0.26	0.29	0.50
	Low-E4 Sun	Without Grilles	0.28	0.20	0.31
		Simulated Divided Light Grilles	0.28	0.18	0.28
		Finelight Grilles	0.28	0.18	0.28
		Energy Spacer Divided Light Grilles	0.28	0.18	0.28
		Full Divided Light Grilles	0.30	0.18	0.28
	Low-E4 SmartSun™	Without Grilles	0.27	0.23	0.52
		Simulated Divided Light Grilles	0.27	0.21	0.46
		Finelight Grilles	0.27	0.21	0.46
		Energy Spacer Divided Light Grilles	0.27	0.21	0.46
		Full Divided Light Grilles	0.29	0.21	0.46
	Low-E4 SmartSun w/HeatLock	Without Grilles	0.23	0.22	0.50
		Simulated Divided Light Grilles	0.23	0.20	0.45
		Finelight Grilles	0.23	0.20	0.45
		Energy Spacer Divided Light Grilles	0.23	0.20	0.45
		Full Divided Light Grilles	0.25	0.20	0.45
	Low-E4 PassiveSun® w/HeatLock	Without Grilles	0.24	0.48	0.62
		Simulated Divided Light Grilles	0.24	0.43	0.55
		Finelight Grilles	0.24	0.43	0.55
		Energy Spacer Divided Light Grilles	0.24	0.43	0.55
		Full Divided Light Grilles	0.27	0.43	0.55
400 Series Flexiframe® Windows AND-N-17	Low-E4®	Without Grilles	0.26	0.33	0.58
		Simulated Divided Light Grilles	0.26	0.30	0.52
		Finelight™ Grilles	0.26	0.30	0.52
		Energy Spacer Divided Light Grilles	0.26	0.30	0.52
		Full Divided Light Grilles	0.28	0.30	0.52
	Low-E4 w/HeatLock®	Without Grilles	0.22	0.32	0.56
		Simulated Divided Light Grilles	0.22	0.29	0.50
		Finelight Grilles	0.22	0.29	0.50
		Energy Spacer Divided Light Grilles	0.22	0.29	0.50
		Full Divided Light Grilles	0.25	0.29	0.50
	Low-E4 Sun	Without Grilles	0.27	0.20	0.31
		Simulated Divided Light Grilles	0.27	0.18	0.28
		Finelight Grilles	0.27	0.18	0.28
		Energy Spacer Divided Light Grilles	0.27	0.18	0.28
		Full Divided Light Grilles	0.28	0.18	0.28
	Low-E4 SmartSun™	Without Grilles	0.26	0.23	0.52
		Simulated Divided Light Grilles	0.26	0.21	0.46
		Finelight Grilles	0.26	0.21	0.46
		Energy Spacer Divided Light Grilles	0.26	0.21	0.46
		Full Divided Light Grilles	0.27	0.21	0.46
	Low-E4 SmartSun w/HeatLock	Without Grilles	0.22	0.22	0.51
		Simulated Divided Light Grilles	0.22	0.20	0.45
		Finelight Grilles	0.22	0.20	0.45
		Energy Spacer Divided Light Grilles	0.22	0.20	0.45
		Full Divided Light Grilles	0.24	0.20	0.45
	Low-E4 PassiveSun® w/HeatLock	Without Grilles	0.23	0.48	0.62
		Simulated Divided Light Grilles	0.23	0.43	0.55
		Finelight Grilles	0.25	0.43	0.55
		Energy Spacer Divided Light Grilles	0.23	0.43	0.55
		Full Divided Light Grilles	0.25	0.43	0.55

Andersen® Product	High-Performance Dual-Pane Glass Type		U-Factor[1]	SHGC[2]	VT[3]
400 Series Complementary Specialty Windows Casement/Awning AND-N-105	Low-E4®	Without Grilles	0.29	0.35	0.61
		Simulated Divided Light Grilles	0.29	0.32	0.55
		Finelight™ Grilles	0.29	0.32	0.55
		Full Divided Light Grilles	0.30	0.32	0.55
	Low-E4 w/HeatLock®	Without Grilles	0.24	0.35	0.60
		Simulated Divided Light Grilles	0.24	0.31	0.54
		Finelight Grilles	0.24	0.31	0.54
		Full Divided Light Grilles	0.26	0.31	0.54
	Low-E4 Sun	Without Grilles	0.29	0.22	0.34
		Simulated Divided Light Grilles	0.29	0.20	0.30
		Finelight Grilles	0.29	0.20	0.30
		Full Divided Light Grilles	0.30	0.20	0.30
	Low-E4 SmartSun™	Without Grilles	0.28	0.23	0.55
		Simulated Divided Light Grilles	0.28	0.21	0.49
		Finelight Grilles	0.28	0.21	0.49
		Full Divided Light Grilles	0.29	0.21	0.49
	Low-E4 SmartSun w/HeatLock	Without Grilles	0.24	0.23	0.54
		Simulated Divided Light Grilles	0.24	0.21	0.48
		Finelight Grilles	0.24	0.21	0.48
		Full Divided Light Grilles	0.27	0.21	0.48
	Low-E4 PassiveSun® w/HeatLock	Without Grilles	0.25	0.53	0.66
		Simulated Divided Light Grilles	0.25	0.48	0.59
		Finelight Grilles	0.25	0.48	0.60
		Full Divided Light Grilles	0.27	0.48	0.60
400 Series Complementary Specialty Windows Double-Hung and Patio Doors AND-N-105	Low-E4®	Without Grilles	0.28	0.37	0.64
		Simulated Divided Light Grilles	0.28	0.33	0.57
		Finelight™ Grilles	0.28	0.33	0.57
		Full Divided Light Grilles	0.29	0.33	0.57
	Low-E4 w/HeatLock®	Without Grilles	0.23	0.36	0.62
		Simulated Divided Light Grilles	0.23	0.33	0.56
		Finelight Grilles	0.23	0.33	0.56
		Full Divided Light Grilles	0.25	0.33	0.56
	Low-E4 Sun	Without Grilles	0.29	0.22	0.35
		Simulated Divided Light Grilles	0.29	0.20	0.32
		Finelight Grilles	0.29	0.20	0.32
		Full Divided Light Grilles	0.30	0.20	0.32
	Low-E4 SmartSun™	Without Grilles	0.27	0.24	0.57
		Simulated Divided Light Grilles	0.27	0.22	0.51
		Finelight Grilles	0.27	0.22	0.51
		Full Divided Light Grilles	0.28	0.22	0.51
	Low-E4 SmartSun w/HeatLock	Without Grilles	0.23	0.24	0.56
		Simulated Divided Light Grilles	0.23	0.22	0.50
		Finelight Grilles	0.23	0.22	0.50
		Full Divided Light Grilles	0.25	0.22	0.50
	Low-E4 PassiveSun® w/HeatLock	Without Grilles	0.24	0.55	0.68
		Simulated Divided Light Grilles	0.24	0.50	0.62
		Finelight Grilles	0.24	0.50	0.62
		Full Divided Light Grilles	0.26	0.50	0.62

continued on next page

• "Low-E4®," "Low-E4® SmartSun™," "Low-E4® Sun," "Low-E4® PassiveSun®" and "HeatLock®" are Andersen trademarks for "Low-E" glass.
1) U-Factor defines the amount of heat loss through the total unit in BTU/hr-ft²-°F. The lower the value, the less heat is lost through the entire product. Window values represent non-tempered glass. Use of tempered glass can increase U-Factor ratings. See nfrc.org for specific performance values. Door values represent tempered glass. 2) Solar Heat Gain Coefficient (SHGC) defines the fraction of solar radiation admitted through the glass directly transmitted, as well as absorbed and subsequently released inward. The lower the value, the less heat is transmitted through the product. 3) Visible Transmittance (VT) measures how much light comes through a product (glass and frame). The higher the value, from 0 to 1, the more daylight the product lets in over the product's total unit area. Visible Light Transmittance is measured over the 380-760 nanometer portion of the solar spectrum.
• NFRC ratings are based on modeling by a third-party agency as validated by an independent test lab in compliance with NFRC program and procedural requirements.
• This data is accurate as of December 2024. Due to ongoing product changes, updated test results, or new industry standards or requirements, this data may change over time. Ratings are for sizes specified by NFRC for testing and certification. Ratings may vary depending on use of tempered glass, different grille options, glass with capillary breather tubes for high altitudes, etc.
• Values are for single units with given pane thickness, stainless steel glass spacers and ¾" (19 mm) grilles for windows and patio door products.

NFRC Certified Total Unit Performance for Products With Dual-Pane Glass *(continued)*

This information is for reference only. Performance values vary based on unit size, configurations and options.
Contact your Andersen supplier for specific unit data.

Andersen® Product	High-Performance Dual-Pane Glass Type		U-Factor[1]	SHGC[2]	VT[3]
400 Series Frenchwood® Gliding Patio Doors Two-Panel AND-N-6	Low-E4®	Without Grilles	0.30	0.26	0.45
		Blinds-Between-the-Glass*	0.36	0.24	0.40
		Simulated Divided Light Grilles	0.30	0.23	0.38
		Finelight™ Grilles	0.30	0.23	0.38
		Energy Spacer Divided Light Grilles	0.30	0.23	0.38
		Full Divided Light Grilles	0.32	0.23	0.38
	Low-E4 w/HeatLock®	Without Grilles	0.27	0.26	0.44
		Simulated Divided Light Grilles	0.27	0.23	0.38
		Finelight Grilles	0.27	0.23	0.38
		Energy Spacer Divided Light Grilles	0.27	0.23	0.38
		Full Divided Light Grilles	0.29	0.23	0.37
	Low-E4 Sun	Without Grilles	0.31	0.16	0.25
		Simulated Divided Light Grilles	0.31	0.15	0.21
		Finelight Grilles	0.31	0.15	0.21
		Energy Spacer Divided Light Grilles	0.31	0.15	0.21
		Full Divided Light Grilles	0.32	0.15	0.21
	Low-E4 SmartSun™	Without Grilles	0.30	0.18	0.40
		Simulated Divided Light Grilles	0.30	0.16	0.35
		Finelight Grilles	0.30	0.16	0.35
		Energy Spacer Divided Light Grilles	0.30	0.16	0.35
		Full Divided Light Grilles	0.31	0.16	0.35
	Low-E4 SmartSun w/HeatLock	Without Grilles	0.27	0.17	0.39
		Simulated Divided Light Grilles	0.27	0.15	0.34
		Finelight Grilles	0.27	0.15	0.34
		Energy Spacer Divided Light Grilles	0.27	0.15	0.34
		Full Divided Light Grilles	0.29	0.15	0.34
	Low-E4 PassiveSun® w/HeatLock	Without Grilles	0.27	0.39	0.48
		Simulated Divided Light Grilles	0.27	0.34	0.41
		Finelight Grilles	0.27	0.34	0.41
		Energy Spacer Divided Light Grilles	0.27	0.34	0.41
		Full Divided Light Grilles	0.30	0.34	0.41
400 Series Frenchwood® Hinged Inswing Patio Doors AND-N-10	Low-E4®	Without Grilles	0.30	0.24	0.41
		Blinds-Between-the-Glass*	0.34	0.24	0.41
		Simulated Divided Light Grilles	0.30	0.21	0.35
		Finelight™ Grilles	0.30	0.21	0.35
		Energy Spacer Divided Light Grilles	0.30	0.21	0.35
		Full Divided Light Grilles	0.32	0.21	0.35
	Low-E4 w/HeatLock®	Without Grilles	0.27	0.24	0.40
		Simulated Divided Light Grilles	0.27	0.21	0.34
		Finelight Grilles	0.27	0.21	0.34
		Energy Spacer Divided Light Grilles	0.27	0.21	0.34
		Full Divided Light Grilles	0.29	0.21	0.34
	Low-E4 Sun	Without Grilles	0.31	0.15	0.23
		Simulated Divided Light Grilles	0.30	0.13	0.19
		Finelight Grilles	0.30	0.13	0.19
		Energy Spacer Divided Light Grilles	0.30	0.13	0.19
		Full Divided Light Grilles	0.32	0.13	0.19
	Low-E4 SmartSun™	Without Grilles	0.30	0.16	0.37
		Simulated Divided Light Grilles	0.30	0.14	0.31
		Finelight Grilles	0.30	0.14	0.31
		Energy Spacer Divided Light Grilles	0.30	0.14	0.31
		Full Divided Light Grilles	0.31	0.14	0.31
	Low-E4 SmartSun w/HeatLock	Without Grilles	0.27	0.16	0.36
		Simulated Divided Light Grilles	0.27	0.14	0.31
		Finelight Grilles	0.27	0.14	0.31
		Energy Spacer Divided Light Grilles	0.27	0.14	0.31
		Full Divided Light Grilles	0.29	0.14	0.31
	Low-E4 PassiveSun® w/HeatLock	Without Grilles	0.28	0.36	0.44
		Simulated Divided Light Grilles	0.28	0.31	0.37
		Finelight Grilles	0.28	0.31	0.37
		Energy Spacer Divided Light Grilles	0.28	0.31	0.37
		Full Divided Light Grilles	0.30	0.31	0.37

Andersen® Product	High-Performance Dual-Pane Glass Type		U-Factor[1]	SHGC[2]	VT[3]
400 Series Frenchwood® Patio Door Sidelights AND-N-64	Low-E4®	Without Grilles	0.30	0.22	0.37
		Simulated Divided Light Grilles	0.30	0.20	0.33
		Finelight™ Grilles	0.30	0.20	0.33
		Energy Spacer Divided Light Grilles	0.30	0.20	0.33
		Full Divided Light Grilles	0.31	0.20	0.33
	Low-E4 w/HeatLock®	Without Grilles	0.27	0.22	0.36
		Simulated Divided Light Grilles	0.27	0.20	0.32
		Finelight Grilles	0.27	0.20	0.32
		Energy Spacer Divided Light Grilles	0.27	0.20	0.32
		Full Divided Light Grilles	0.29	0.20	0.32
	Low-E4 Sun	Without Grilles	0.30	0.14	0.20
		Simulated Divided Light Grilles	0.30	0.13	0.18
		Finelight Grilles	0.30	0.13	0.18
		Energy Spacer Divided Light Grilles	0.30	0.13	0.18
		Full Divided Light Grilles	0.31	0.13	0.18
	Low-E4 SmartSun™	Without Grilles	0.29	0.15	0.33
		Simulated Divided Light Grilles	0.29	0.14	0.30
		Finelight Grilles	0.29	0.14	0.30
		Energy Spacer Divided Light Grilles	0.29	0.14	0.30
		Full Divided Light Grilles	0.30	0.14	0.30
	Low-E4 SmartSun w/HeatLock	Without Grilles	0.27	0.15	0.32
		Simulated Divided Light Grilles	0.27	0.13	0.29
		Finelight Grilles	0.27	0.13	0.29
		Energy Spacer Divided Light Grilles	0.27	0.13	0.29
		Full Divided Light Grilles	0.29	0.13	0.29
	Low-E4 PassiveSun® w/HeatLock	Without Grilles	0.27	0.33	0.40
		Simulated Divided Light Grilles	0.27	0.30	0.35
		Finelight Grilles	0.27	0.30	0.35
		Energy Spacer Divided Light Grilles	0.27	0.30	0.35
		Full Divided Light Grilles	0.29	0.30	0.35
400 Series Frenchwood® Patio Door Transoms AND-N-65	Low-E4®	Without Grilles	0.29	0.24	0.40
		Simulated Divided Light Grilles	0.29	0.21	0.35
		Finelight™ Grilles	0.29	0.21	0.35
		Energy Spacer Divided Light Grilles	0.29	0.21	0.35
		Full Divided Light Grilles	0.30	0.21	0.35
	Low-E4 w/HeatLock®	Without Grilles	0.27	0.23	0.39
		Simulated Divided Light Grilles	0.27	0.21	0.34
		Finelight Grilles	0.27	0.21	0.34
		Energy Spacer Divided Light Grilles	0.27	0.21	0.34
		Full Divided Light Grilles	0.28	0.21	0.34
	Low-E4 Sun	Without Grilles	0.29	0.15	0.22
		Simulated Divided Light Grilles	0.29	0.13	0.20
		Finelight Grilles	0.29	0.13	0.20
		Energy Spacer Divided Light Grilles	0.29	0.13	0.20
		Full Divided Light Grilles	0.30	0.13	0.20
	Low-E4 SmartSun™	Without Grilles	0.29	0.16	0.36
		Simulated Divided Light Grilles	0.29	0.14	0.32
		Finelight Grilles	0.29	0.14	0.32
		Energy Spacer Divided Light Grilles	0.29	0.14	0.32
		Full Divided Light Grilles	0.30	0.14	0.32
	Low-E4 SmartSun w/HeatLock	Without Grilles	0.26	0.16	0.35
		Simulated Divided Light Grilles	0.26	0.14	0.31
		Finelight Grilles	0.26	0.14	0.31
		Energy Spacer Divided Light Grilles	0.26	0.14	0.31
		Full Divided Light Grilles	0.28	0.14	0.31
	Low-E4 PassiveSun® w/HeatLock	Without Grilles	0.27	0.35	0.43
		Simulated Divided Light Grilles	0.27	0.32	0.38
		Finelight Grilles	0.27	0.32	0.38
		Energy Spacer Divided Light Grilles	0.27	0.32	0.38
		Full Divided Light Grilles	0.28	0.32	0.38

continued on next page

• "Low-E4®," "Low-E4® SmartSun™," "Low-E4® Sun," "Low-E4® PassiveSun®" and "HeatLock®" are Andersen trademarks for "Low-E" glass.
1) U-Factor defines the amount of heat loss through the total unit in BTU/hr-ft²-°F. The lower the value, the less heat is lost through the entire product. Window values represent non-tempered glass. Use of tempered glass can increase U-Factor ratings. See nfrc.org for specific performance values. Door values represent tempered glass. 2) Solar Heat Gain Coefficient (SHGC) defines the fraction of solar radiation admitted through the glass directly transmitted, as well as absorbed and subsequently released inward. The lower the value, the less heat is transmitted through the product. 3) Visible Transmittance (VT) measures how much light comes through a product (glass and frame). The higher the value, from 0 to 1, the more daylight the product lets in over the product's total unit area. Visible Light Transmittance is measured over the 380-760 nanometer portion of the solar spectrum.
• NFRC ratings are based on modeling by a third-party agency as validated by an independent test lab in compliance with NFRC program and procedural requirements.
• This data is accurate as of December 2024. Due to ongoing product changes, updated test results, or new industry standards or requirements, this data may change over time. Ratings are for sizes specified by NFRC for testing and certification. Ratings may vary depending on use of tempered glass, different grille options, glass with capillary breather tubes for high altitudes, etc.
• Values are for single units with given pane thickness, stainless steel glass spacers and ¾" (19 mm) grilles for windows and patio door products.

NFRC Certified Total Unit Performance for Products With Dual-Pane Glass *(continued)*

This information is for reference only. Performance values vary based on unit size, configurations and options.
Contact your Andersen supplier for specific unit data.

Andersen® Product	High-Performance Dual-Pane Glass Type		U-Factor[1]	SHGC[2]	VT[3]
400 Series Complementary Hinged Inswing Patio Doors Springline™ and Arch AND-N-127	Low-E4®	Without Grilles	0.32	0.24	0.41
		Simulated Divided Light Grilles	0.32	0.21	0.35
		Finelight™ Grilles	0.34	0.21	0.35
		Full Divided Light Grilles	0.33	0.21	0.35
	Low-E4 w/HeatLock®	Without Grilles	0.29	0.24	0.40
		Simulated Divided Light Grilles	0.29	0.21	0.34
		Finelight Grilles	0.30	0.21	0.34
		Full Divided Light Grilles	0.30	0.21	0.34
	Low-E4 Sun	Without Grilles	0.33	0.15	0.23
		Simulated Divided Light Grilles	0.33	0.13	0.20
		Finelight Grilles	0.34	0.13	0.20
		Full Divided Light Grilles	0.34	0.13	0.20
	Low-E4 SmartSun™	Without Grilles	0.32	0.16	0.37
		Simulated Divided Light Grilles	0.32	0.14	0.32
		Finelight Grilles	0.33	0.14	0.32
		Full Divided Light Grilles	0.33	0.14	0.32
	Low-E4 SmartSun w/HeatLock	Without Grilles	0.29	0.16	0.36
		Simulated Divided Light Grilles	0.29	0.14	0.31
		Finelight Grilles	0.30	0.14	0.31
		Full Divided Light Grilles	0.31	0.14	0.31
	Low-E4 PassiveSun® w/HeatLock	Without Grilles	0.30	0.36	0.44
		Simulated Divided Light Grilles	0.30	0.31	0.38
		Finelight Grilles	0.31	0.31	0.38
		Full Divided Light Grilles	0.32	0.31	0.38
400 Series Complementary Hinged Outswing Patio Doors Springline™ and Arch AND-N-127	Low-E4®	Without Grilles	0.33	0.25	0.41
		Simulated Divided Light Grilles	0.33	0.22	0.35
		Finelight™ Grilles	0.34	0.22	0.35
		Full Divided Light Grilles	0.34	0.22	0.35
	Low-E4 w/HeatLock®	Without Grilles	0.30	0.24	0.40
		Simulated Divided Light Grilles	0.30	0.21	0.34
		Finelight Grilles	0.31	0.21	0.34
		Full Divided Light Grilles	0.32	0.21	0.34
	Low-E4 Sun	Without Grilles	0.33	0.16	0.23
		Simulated Divided Light Grilles	0.33	0.14	0.20
		Finelight Grilles	0.35	0.14	0.20
		Full Divided Light Grilles	0.35	0.14	0.20
	Low-E4 SmartSun™	Without Grilles	0.33	0.17	0.37
		Simulated Divided Light Grilles	0.33	0.15	0.32
		Finelight Grilles	0.34	0.15	0.32
		Full Divided Light Grilles	0.34	0.15	0.32
	Low-E4 SmartSun w/HeatLock	Without Grilles	0.30	0.16	0.36
		Simulated Divided Light Grilles	0.30	0.14	0.31
		Finelight Grilles	0.31	0.14	0.31
		Full Divided Light Grilles	0.32	0.14	0.31
	Low-E4 PassiveSun® w/HeatLock	Without Grilles	0.30	0.37	0.44
		Simulated Divided Light Grilles	0.30	0.32	0.38
		Finelight Grilles	0.31	0.32	0.38
		Full Divided Light Grilles	0.33	0.32	0.38

Andersen® Product	High-Performance Dual-Pane Glass Type		U-Factor[1]	SHGC[2]	VT[3]
400 Series Complementary Patio Door Sidelights Arch AND-N-131	Low-E4®	Without Grilles	0.32	0.22	0.39
		Simulated Divided Light Grilles	0.32	0.21	0.34
		Finelight™ Grilles	0.33	0.20	0.32
		Full Divided Light Grilles	0.33	0.21	0.35
	Low-E4 w/HeatLock®	Without Grilles	0.29	0.23	0.38
		Simulated Divided Light Grilles	0.29	0.21	0.34
		Finelight Grilles	0.29	0.21	0.34
		Full Divided Light Grilles	0.31	0.21	0.34
	Low-E4 Sun	Without Grilles	0.33	0.15	0.22
		Simulated Divided Light Grilles	0.33	0.13	0.19
		Finelight Grilles	0.33	0.13	0.18
		Full Divided Light Grilles	0.34	0.13	0.19
	Low-E4 SmartSun™	Without Grilles	0.32	0.16	0.35
		Simulated Divided Light Grilles	0.32	0.14	0.31
		Finelight Grilles	0.33	0.14	0.29
		Full Divided Light Grilles	0.33	0.14	0.31
	Low-E4 SmartSun w/HeatLock	Without Grilles	0.29	0.16	0.34
		Simulated Divided Light Grilles	0.29	0.14	0.31
		Finelight Grilles	0.29	0.14	0.30
		Full Divided Light Grilles	0.30	0.14	0.30
	Low-E4 PassiveSun® w/HeatLock	Without Grilles	0.30	0.35	0.42
		Simulated Divided Light Grilles	0.30	0.31	0.37
		Finelight Grilles	0.30	0.31	0.37
		Full Divided Light Grilles	0.32	0.31	0.37

• "Low-E4®," "Low-E4® SmartSun™," "Low-E4® Sun," "Low-E4® PassiveSun®" and "HeatLock®" are Andersen trademarks for "Low-E" glass.
1) U-Factor defines the amount of heat loss through the total unit in BTU/hr-ft²-°F. The lower the value, the less heat is lost through the entire product. Window values represent non-tempered glass. Use of tempered glass can increase U-Factor ratings. See nfrc.org for specific performance values. Door values represent tempered glass. 2) Solar Heat Gain Coefficient (SHGC) defines the fraction of solar radiation admitted through the glass directly transmitted, as well as absorbed and subsequently released inward. The lower the value, the less heat is transmitted through the product. 3) Visible Transmittance (VT) measures how much light comes through a product (glass and frame). The higher the value, from 0 to 1, the more daylight the product lets in over the product's total unit area. Visible Light Transmittance is measured over the 380-760 nanometer portion of the solar spectrum.
• NFRC ratings are based on modeling by a third-party agency as validated by an independent test lab in compliance with NFRC program and procedural requirements.
• This data is accurate as of December 2024. Due to ongoing product changes, updated test results, or new industry standards or requirements, this data may change over time. Ratings are for sizes specified by NFRC for testing and certification. Ratings may vary depending on use of tempered glass, different grille options, glass with capillary breather tubes for high altitudes, etc.
• Values are for single units with given pane thickness, stainless steel glass spacers and ¾" (19 mm) grilles for windows and patio door products.

NFRC Certified Total Unit Performance for Products With Triple-Pane Glass

This information is for reference only. Performance values vary based on unit size, configurations and options. Contact your Andersen supplier for specific unit data.

Andersen® Product	High-Performance Triple-Pane Glass Type		U-Factor[1]	SHGC[2]	VT[3]
400 Series Frenchwood® Gliding Patio Doors Two-Panel AND-N-6	Low-E4®	Without Grilles	0.28	0.25	0.41
		Simulated Divided Light Grilles	0.28	0.22	0.35
		Finelight™ Grilles	0.29	0.22	0.35
	Low-E4 Enhanced	Without Grilles	0.25	0.24	0.39
		Simulated Divided Light Grilles	0.25	0.21	0.34
		Finelight Grilles	0.25	0.21	0.34
	Low-E4 Enhanced w/HeatLock®	Without Grilles	0.23	0.23	0.38
		Simulated Divided Light Grilles	0.23	0.20	0.33
		Finelight Grilles	0.24	0.20	0.33
	Low-E4 SmartSun™	Without Grilles	0.28	0.17	0.37
		Simulated Divided Light Grilles	0.28	0.15	0.32
		Finelight Grilles	0.28	0.15	0.32
	Low-E4 SmartSun Enhanced	Without Grilles	0.25	0.16	0.35
		Simulated Divided Light Grilles	0.25	0.14	0.30
		Finelight Grilles	0.25	0.14	0.30
	Low-E4 SmartSun Enhanced w/HeatLock	Without Grilles	0.23	0.16	0.35
		Simulated Divided Light Grilles	0.23	0.14	0.30
		Finelight Grilles	0.24	0.14	0.30
400 Series Frenchwood® Hinged Inswing Patio Doors AND-N-10	Low-E4®	Without Grilles	0.28	0.22	0.37
		Simulated Divided Light Grilles	0.28	0.20	0.32
		Finelight™ Grilles	0.29	0.20	0.32
	Low-E4 Enhanced	Without Grilles	0.25	0.22	0.36
		Simulated Divided Light Grilles	0.25	0.19	0.31
		Finelight Grilles	0.26	0.19	0.31
	Low-E4 Enhanced w/HeatLock®	Without Grilles	0.24	0.21	0.35
		Simulated Divided Light Grilles	0.24	0.18	0.30
		Finelight Grilles	0.24	0.18	0.30
	Low-E4 SmartSun™	Without Grilles	0.28	0.15	0.34
		Simulated Divided Light Grilles	0.28	0.13	0.29
		Finelight Grilles	0.29	0.13	0.29
	Low-E4 SmartSun Enhanced	Without Grilles	0.25	0.15	0.32
		Simulated Divided Light Grilles	0.25	0.13	0.28
		Finelight Grilles	0.26	0.13	0.28
	Low-E4 SmartSun Enhanced w/HeatLock	Without Grilles	0.24	0.14	0.32
		Simulated Divided Light Grilles	0.24	0.13	0.27
		Finelight Grilles	0.24	0.13	0.27
400 Series Frenchwood® Patio Door Sidelights AND-N-64	Low-E4®	Without Grilles	0.28	0.21	0.34
		Simulated Divided Light Grilles	0.28	0.19	0.30
		Finelight™ Grilles	0.28	0.19	0.30
	Low-E4 Enhanced	Without Grilles	0.25	0.20	0.33
		Simulated Divided Light Grilles	0.25	0.18	0.29
		Finelight Grilles	0.25	0.18	0.29
	Low-E4 Enhanced w/HeatLock®	Without Grilles	0.24	0.20	0.32
		Simulated Divided Light Grilles	0.24	0.18	0.28
		Finelight Grilles	0.24	0.18	0.28
	Low-E4 SmartSun™	Without Grilles	0.28	0.14	0.31
		Simulated Divided Light Grilles	0.28	0.13	0.27
		Finelight Grilles	0.28	0.13	0.27
	Low-E4 SmartSun Enhanced	Without Grilles	0.25	0.14	0.29
		Simulated Divided Light Grilles	0.25	0.13	0.26
		Finelight Grilles	0.25	0.13	0.26
	Low-E4 SmartSun Enhanced w/HeatLock	Without Grilles	0.24	0.13	0.29
		Simulated Divided Light Grilles	0.24	0.12	0.25
		Finelight Grilles	0.24	0.12	0.25

Andersen® Product	High-Performance Triple-Pane Glass Type		U-Factor[1]	SHGC[2]	VT[3]
400 Series Frenchwood® Patio Door Transoms AND-N-65	Low-E4®	Without Grilles	0.27	0.22	0.36
		Simulated Divided Light Grilles	0.27	0.20	0.32
		Finelight™ Grilles	0.27	0.20	0.32
	Low-E4 Enhanced	Without Grilles	0.24	0.22	0.35
		Simulated Divided Light Grilles	0.24	0.19	0.31
		Finelight Grilles	0.24	0.19	0.31
	Low-E4 Enhanced w/HeatLock®	Without Grilles	0.23	0.21	0.34
		Simulated Divided Light Grilles	0.23	0.19	0.30
		Finelight Grilles	0.23	0.19	0.30
	Low-E4 SmartSun™	Without Grilles	0.27	0.15	0.33
		Simulated Divided Light Grilles	0.27	0.14	0.29
		Finelight Grilles	0.27	0.14	0.29
	Low-E4 SmartSun Enhanced	Without Grilles	0.24	0.15	0.31
		Simulated Divided Light Grilles	0.24	0.13	0.28
		Finelight Grilles	0.24	0.13	0.28
	Low-E4 SmartSun Enhanced w/HeatLock	Without Grilles	0.23	0.14	0.31
		Simulated Divided Light Grilles	0.23	0.13	0.27
		Finelight Grilles	0.23	0.13	0.27

• "Low-E4®," "Low-E4® SmartSun™," "Low-E4® Sun," "Low-E4® PassiveSun™" and "HeatLock™" are Andersen trademarks for "Low-E" glass.
1) U-Factor defines the amount of heat loss through the total unit in BTU/hr-ft²-°F. The lower the value, the less heat is lost through the entire product. Window values represent non-tempered glass. Use of tempered glass can increase U-Factor ratings. See nfrc.org for specific performance values. Door values represent tempered glass. 2) Solar Heat Gain Coefficient (SHGC) defines the fraction of solar radiation admitted through the glass directly transmitted, as well as absorbed and subsequently released inward. The lower the value, the less heat is transmitted through the product. 3) Visible Transmittance (VT) measures how much light comes through a product (glass and frame). The higher the value, from 0 to 1, the more daylight the product lets in over the product's total unit area. Visible Light Transmittance is measured over the 380-760 nanometer portion of the solar spectrum.
• NFRC ratings are based on modeling by a third-party agency as validated by an independent test lab in compliance with NFRC program and procedural requirements.
• This data is accurate as of December 2024. Due to ongoing product changes, updated test results, or new industry standards or requirements, this data may change over time. Ratings are for sizes specified by NFRC for testing and certification. Ratings may vary depending on use of tempered glass, different grille options, glass with capillary breather tubes for high altitudes, etc.
• Values are for single units with given pane thickness, stainless steel glass spacers and ¾" (19 mm) grilles for windows and patio door products.

About the Label

Look for this certification label on every window and patio door you buy. The NFRC section was designed by the National Fenestration Rating Council to provide accurate information that helps you promote the energy efficiency of the homes you build. These ratings allow you – and your customers – to measure and compare the energy performance of similar products. If the product does not have this label, the NFRC has not verified its claims.

About the NFRC

The National Fenestration Rating Council (NFRC) is a nonpartisan coalition of professionals whose purpose is to provide fair, accurate and credible energy performance ratings for fenestration products. NFRC's membership includes manufacturers, suppliers, designers, specifiers, utility companies, government agencies and other building industry representatives.

Andersen Corporation is a founding member of the NFRC and continues to support its work by providing fair, accurate and credible energy performance ratings to consumers and the building industry. If you have any questions about the NFRC, its program or energy performance ratings, write them at: NFRC, 6305 Ivy Lane, Suite 410, Greenbelt, MD 20770. Phone: 301-589-1776. Website: **nfrc.org**

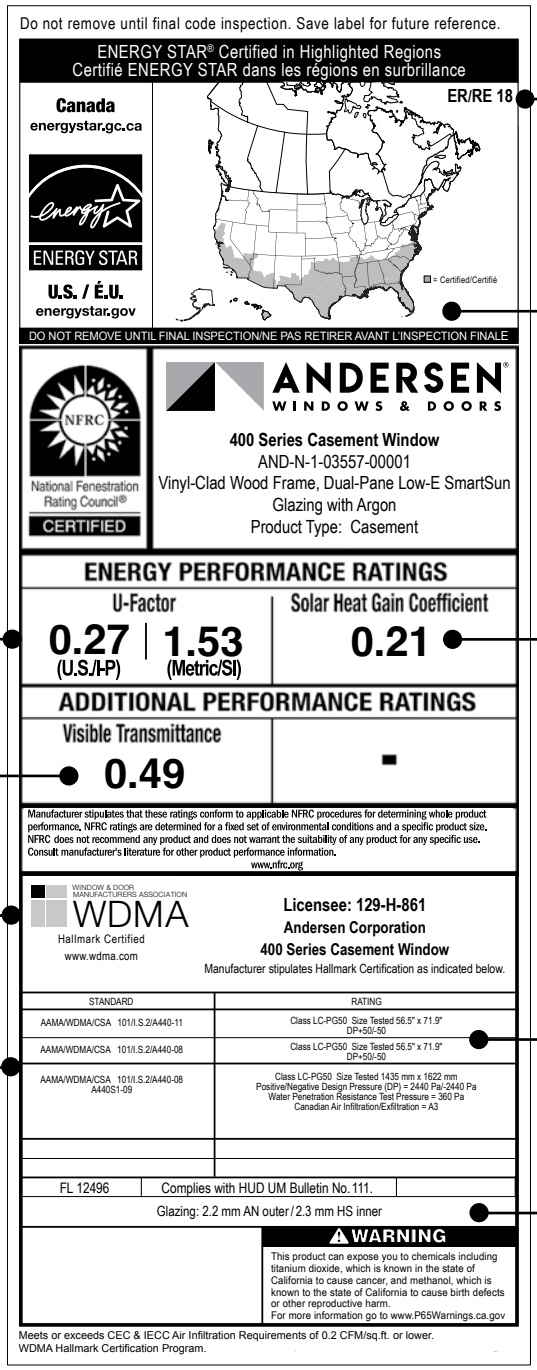

Energy Rating (ER) represents "Energy Rating" and is a rating used in Canada for product comparison purposes (the higher the ER number, the more energy saved during the heating season).

ENERGY STAR® Climate Zone Map is based on U-Factor and solar heat gain coefficient criteria for specific ENERGY STAR climate zones within the United States and Canada. The shading of the map shows which climate zone(s) a particular product and glass type is ENERGY STAR Version 7.0 certified in. Visit **andersenwindows.com/energystar** for more details.

U-Factor indicates how well a product prevents heat from escaping (the lower the number, the better).

Solar Heat Gain Coefficient measures how well a product blocks heat caused by sunlight (the lower the number, the more it will help reduce the use of air conditioning and as a result, reduce electrical bills and energy use).

Visible Transmittance refers to how much visible light comes through a product (the closer to 1.0, the more light is transmitted).

WDMA Hallmark Certification verifies the performance ratings of this product were tested by an independent testing laboratory and verified by a third-party certification program.

Test Standards

Performance Grade (PG) and **Design Pressure (DP) Ratings**

Glass Construction used with this product type.

- NFRC ratings are based on modeling by a third-party agency as validated by an independent test lab in compliance with NFRC program and procedural requirements.
- "ENERGY STAR" is a registered trademark of the U.S. Environmental Protection Agency.

NOTES

INSTALLATION ACCESSORIES & MATERIALS

Optional installation accessories and materials are available for installing Andersen® windows and patio doors. Keep instructions and safety information in mind when considering the installation and use of any Andersen product. For more information, contact your Andersen supplier or visit **andersenwindows.com/installmaterials**.

Extension Jambs



Available for most Andersen products. See product sections for details.

Fibrex® Trim Board

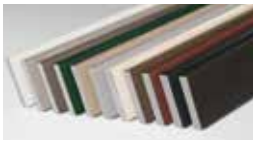

This solid cellular Fibrex trim board can be cut or ripped to size, and fastened using nails or screws. 3 ½" (89) wide x ¾" (19) thick in 10' (3048) lengths. Available in white, canvas, prairie grass, Sandtone, Terratone, cocoa bean, dark bronze, red rock, forest green, dove gray and black.

Vinyl Channels



Rigid vinyl "J" and "h" channels are ½" (13) deep and come in 150" (3810) lengths. "J" channels are ¾" (19) wide and "h" channels are 1" (25) wide. "J" and "h" channels are available in white, Sandtone and Terratone. "H" channels are ¾" (19) deep and come in 84" (2134) and 150" (3810) lengths. White "H" channels are ¾" (19) wide. Sandtone and Terratone "H" channels are 1" (25) wide.

Auxiliary Casing

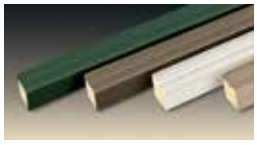

Made of cellular Fibrex material. 1 3⁄16" (30) x 1 3⁄16" (30) thick in 150" (3810) lengths. Available in white, canvas, Sandtone, Terratone, dark bronze, forest green and black.

Drip Cap

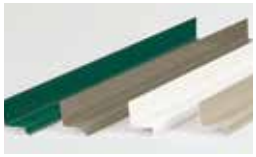

Included on 400 Series windows with vertical (ribbon) joins. Made from heavy 24-gauge corrosion-resistant aluminum construction and comes in 6' (1829), 10' (3048) and 12'-7 ½" (3848) lengths. Available in white, canvas, prairie grass, Sandtone, Terratone, cocoa bean, dark bronze, red rock, forest green, dove gray and black.

Coil Stock



Made from .018"-thick aluminum, Andersen coil stock is available in 24" (610) x 50' (15240) rolls and can be ordered in white, canvas, prairie grass, Sandtone, Terratone, cocoa bean, dark bronze, red rock, forest green, dove gray and black. Color-matched 1 ¼" (32)-long stainless steel trim nails are also available and can be ordered in 1 lb/.454 kg boxes. Coil stock can be cut and formed to profiles at the job site.

Straight Flashing Tape



A superior product that provides excellent adhesion to all Andersen product substrates and common building materials. Asphalt and solvent free, with a wide application temperature range and split release liner for easy and accurate application. Available in 4" (102) or 6" (152) widths in 33' (10058) or 75' (22860) lengths in a single roll or full pallet.

Color-Matched Sealant



This high-performance sealant provides excellent durability and adhesion to Andersen product substrates and common building materials. Paintable after one hour and can be applied from 10°F to 110°F. Color-matched sealant in white, canvas, prairie grass, Sandtone, Terratone, cocoa bean, dark bronze, red rock, forest green, dove gray and black is available in a single 10.1 ounce tube or a 20 ounce foil pack. White, dark bronze and black colors in both sizes are available in a full or a half pallet.

Installation Foam



A minimally expanding low-pressure build foam that remains soft and pliable. Trimmable in as little as one hour, it repels moisture and offers superior performance in a wide range of environments. Available in a single 20 ounce commercial can or in a full pallet.

Shims

Flat self-hanging shims help with a secure installation. Available in boxes of 248 shims.

Installation Screws

Properly sized installation screws are provided for windows that will be secured through the jamb.

Foam Backer Rod

⅜" (10) backer rod helps provide an air seal around the frame. Available in 100' (30480) rolls.

Dimensions in parentheses are in millimeters.

INSTALLATION INFORMATION

ROUGH OPENINGS

The purpose of a rough opening is to allow for proper spacing between the window or patio door unit and the building structure. The space is required for locating, leveling and squaring the unit during installation and to provide an area for insulation. A rough opening that is incorrectly sized may affect unit operation and may not allow for adequate fastening of the unit to the building structure. Andersen® rough opening dimensions are provided as a guideline to help determine the minimum amount of space needed between the window or patio door and the building structure. See appropriate product sections for rough opening guidelines for each product.

Keep in mind that rough opening dimensions may need to be altered from published guidelines, depending on installation methods, joining methods, replacement methods, etc. For example, flashing systems can reduce the amount of available rough opening space and should be factored in when calculating rough opening dimensions. The use of support or joining materials will encroach on the rough opening and may require additional rough opening space between the unit and the building structure, depending on the thickness of the flashing system and joining materials used. To facilitate drainage, the rough opening sill plate should never slope toward the interior. For challenging environments and other information, refer to EEBA's (Energy and Environmental Building Association) Water Management Guide (**eeba.org**).

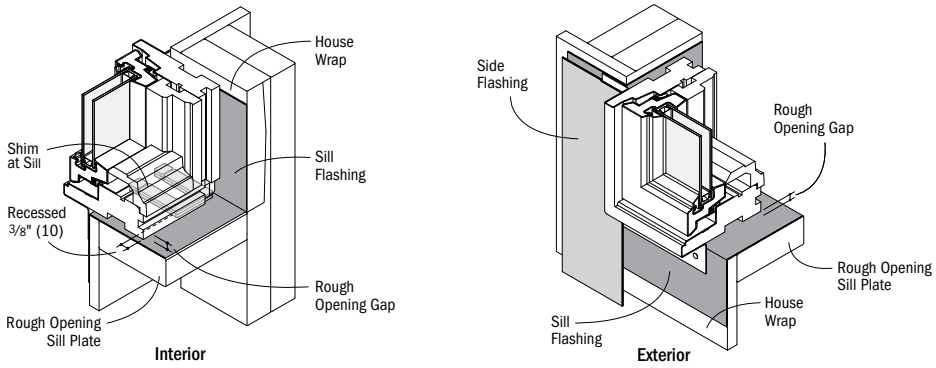

Interior and exterior example of window sill flashing in a membrane drainage system.

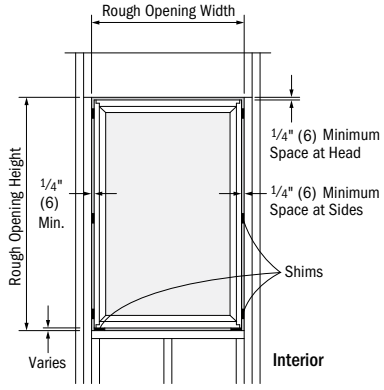

Example of window unit installed using Andersen published minimum rough opening dimensions.

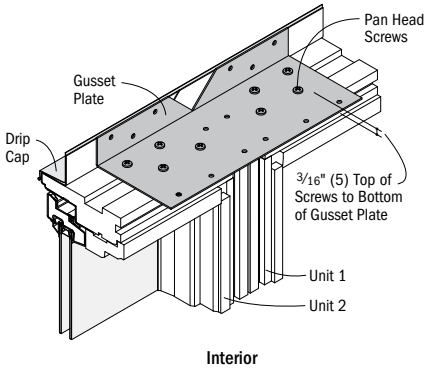

Example of two units joined together with the use of gusset plates and pan head screws that will require additional rough opening space.

IMPORTANCE OF PROPER INSTALLATION

Proper installation and maintenance of Andersen products is essential to attain optimum performance and operation. Installation instructions that provide guidelines for proper installation are typically provided with Andersen products. They are also available by visiting **andersenwindows.com**. Remember that every installation is different, and Andersen strongly recommends consultation with the local supplier or an experienced contractor, architect or structural engineer prior to the installation of any Andersen product. The method of attachment for Andersen products, fastener selection and code compliance is the responsibility of the architect, building owner, contractor, installer and/or consumer. For more complete installation details, visit **andersenwindows.com** or see your Andersen supplier.

GENERAL NOTES

When ordering, make certain you specify, then verify, the exact product, unit dimensions, configuration requirements, color and options you desire on each window or patio door. Before installing the product, we suggest you verify that it includes the features and options you ordered. Visit **andersenwindows.com** for product installation and joining guides. Printing limitations prohibit exact color duplication of products. View actual samples for building specifications. Andersen Corporation reserves the right to change details, specifications or sizes without notice. The customer assumes all risk of alterations made to Andersen products.

Dimensions in parentheses are in millimeters.

CODES

Appropriate selection of Andersen products that conform to all applicable laws, ordinances, building codes and safety requirements is the sole responsibility of the architect, designer, building owner and/or contractor. Check with your local building code officials for specific information. Unit wind load, performance grade and energy performance information is provided on pages 183-219. For up-to-date product performance information, visit **andersenwindows.com**. The performance of any building system depends on the design and construction of the building system in its entirety, which should meet building code requirements, as well as address product and material limitations, and local environment and climate.

DRIP CAPS

Drip caps are a specific type of flashing or trim used at the head of a window or door to direct water from the drainage plane out beyond the face of the unit.

FLASHING

Flashing is an important element in a building's water management system. It is used to shed and direct water to the building exterior or to the drainage plane. Flashing materials are typically applied starting from the bottom and working upward, with each successive layer overlapping the previous one in shingle fashion. Water infiltration problems in any type of building can be reduced by properly flashing and/or sealing around all building openings, including windows and doors.

USE OF SHIMS

Shims are used along the side jambs of windows and doors to center the unit in the rough opening and to position it plumb, level and square. In addition, shims are always required for windows under the sill at the side jambs to lift it off the rough opening sill plate. Shims also enable a straight frame for proper weatherstrip contact and unit operation. If not placed properly, unit performance and operation can be affected. Use waterproof shims capable of supporting the weight of the product. When using tapered shims, use them in pairs with the tapers opposing each other to avoid tilting the unit or twisting (rotating) of the jambs.

SEALANTS

Sealants are elastic materials used to block the passage of water and/or air while allowing movement between the two sides of the joint. A sealant should bond tightly, and be able to expand and contract to accommodate joint movement without cracking or tearing away from the substrate. Surfaces must be clean, dry and sound for adequate sealant adhesion. Choose a sealant that is compatible with, and that will adhere adequately to, all building materials used in the window and patio door area. Proper sealant joint design is based upon the expected movement of adjacent materials and the movement capability of the sealant. A general rule of thumb is that the depth of the sealant joint should be equal to half the width (D = W/2), but generally not less than ¼" (6) or more than ½" (13). Foam-plastic backer rod can be used to limit the depth of the sealant joint, to provide a backstop for tooling the sealant without damage to the bond. It also acts as a bond breaker to help minimize stress in the sealant. Sealants should be maintained seasonally, and repaired and/or replaced as needed.

Dimensions in parentheses are in millimeters.

GENERAL INSTALLATION GUIDELINES

1. Read and follow the installation guide in its entirety.
2. Decide whether you are integrating to a surface barrier or a membrane drainage system before installing the product. The appropriate method for your installation may vary based on building design, application and industry practices.
3. Make certain the drainage plane is continuous (proper overlaps to shed water, taped seams, etc.).
4. Andersen products should be installed only in the vertical position.
5. Check the rough opening to make sure it is sized properly, is square and is level.
6. Install the window or door plumb.
7. Install the window or door level.
8. Install the window or door square. Diagonal measurements should be within ⅛" (3).
9. Follow installation instructions to properly locate shims and to make sure that units are plumb, level and square. Shims are always required under the window jambs at the sill and along the jambs on the sides for windows and doors.
10. Check for squareness of unit before final anchoring of the product into the wall.
11. Anchor unit as directed with appropriate fasteners.
12. Integrate the window and door into the drainage plane of the wall using quality flashing and sealing materials. All flashing materials should be properly overlapped to shed water.
13. Allow ¼" (6) minimum space for a sealant joint around perimeter of unit between exterior finish materials and unit.
14. Insulate and seal the interior cavity between the window or door frame and the rough opening.
15. Check operation before application of interior trim.
16. Stain and/or seal all unfinished wood surfaces promptly to minimize moisture absorption.

EXTERIOR PAINTING/SEALING OF ANDERSEN® PRODUCTS

The exterior of some Andersen products may be painted or stained. However, improper painting and staining may cause damage to vinyl, aluminum and other exterior materials. Please refer to the individual product sections for details on painting Andersen product exteriors.

CAUTIONS

1. Do not apply any type of film to insulating glass. Thermal stress and glass damage can result. Andersen Corporation is not responsible for product performance when films are applied to Andersen products.
2. The use of removable insulating materials such as insulated window coverings, shutters and other shading devices may also cause thermal stress conditions and/or deformation of protective vinyl. In addition, excessive condensation may result, which can have a deteriorating effect on the window or door unit(s) involved. Andersen Corporation is not responsible for product performance when these kinds of materials or devices are applied to or used in conjunction with Andersen products.
3. In wall construction utilizing brick facades, leave adequate clearance between sill, jambs and brick for sealing and dimensional change of framework.
4. Acid solutions commonly used to wash brick and other masonry materials will damage glass, fasteners, hardware and metal flashing. Protect unit and follow cleaning product instructions carefully. Damage caused by acid solution is not covered under the Andersen limited warranty.
5. Andersen windows may be combined in almost unlimited ribbons or stacks if each unit is positively secured to structural elements on opposing sides and if the proper joining system is used. See pages 183-198 for more information.
6. Installing Andersen windows and doors into high humidity and/or chemically saturated environments such as a shower or pool may cause damage not covered under the terms of the limited warranty. Avoid interior direct water exposure. Additional product modifications and maintenance may be required.

SAFETY GLASS

Unless specifically ordered, Andersen windows are not made with safety glass and, if broken, the glass could fragment, causing injury. Andersen windows may be ordered with tempered glass which may reduce the likelihood of injury when broken. All Andersen patio doors are made with tempered glass. Differences in appearance between tempered and non-tempered glass can be expected. Slight visual distortions may be noticeable and occur normally as a result of the tempering process. Building codes require safety glass in locations adjacent to or near doors and other locations.

WINDOW AND PATIO DOOR SAFETY

Windows may provide a secondary avenue of escape or rescue in an emergency, such as a fire. Every family should develop an escape plan and make sure family members know how to escape from the home in an emergency. In your plan, include two ways to escape from every room in case one way is blocked by fire or smoke, and make sure you have a designated meeting place outside. A window or a patio door is an alternate means of escape or rescue. Practice your plan until each member of the family understands it and is able to escape without assistance. Remember, you may not be able to reach children during a fire emergency. Teach children — even very young children — that they must escape from a fire in the home and never hide from the fire or from emergency personnel.

LOOKOUT FOR KIDS® PROGRAM

The Consumer Product Safety Commission has said: "Keep children away from open windows to prevent falls. Don't depend on insect screens to keep the child from falling out of the window. They are designed to keep insects out, not children in. Avoid placing furniture near windows to keep children from climbing to a window seat or sill." In an effort to educate consumers about the potential for child falls from windows, Andersen Corporation created the LookOut For Kids Program. It combines a window and door safety brochure and specific product instructions to help make window and door safety an important priority for consumers. For more information on child safety, write:

Andersen Corporation
LookOut For Kids Program
100 Fourth Avenue North
Bayport, MN 55003
Call: **800-313-8889**
Email: **lofk@andersencorp.com**
Website: **andersenwindows.com/windowsafety**

LOOK OUT! for kids®

THE ENVIRONMENT HAS A BUSINESS PARTNER

Respect for the environment is nothing new at Andersen. For more than a century, it has been part of who we are. Our commitment to recycle and reclaim materials began simply because it was good business. Now it's part of our broader commitment to sustainability and responsible stewardship of all of our resources. Andersen is committed to providing you with long-lasting,* energy-efficient windows and patio doors. Visit **andersenwindows.com/sustainability** for more information.

Andersen® products are certified under the National Fenestration Rating Council (NFRC) voluntary third-party certification program designed to ensure accurate energy performance ratings and labeling.

The Window & Door Manufacturers Association (WDMA) Hallmark Certification program includes product testing and quality-control process audits to verify that Andersen windows and doors are produced in conformance with the industry standards for air, water resistance and structural performance.

Andersen Corporation is proud to be an ENERGY STAR® partner. For over 120 years, Andersen has built a reputation for environmental stewardship and energy-efficient products. In fact, Andersen has been part of the ENERGY STAR program since it started and was the first window manufacturer to be named an ENERGY STAR National Window Partner of the Year in 1999.

400 Series windows and doors are Indoor Advantage Gold™ certified by SCS Global Services for Indoor Air Quality. Andersen was the first window manufacturer to certify products for indoor air quality, beginning in 2008. For products covered, values and certificate details, visit **andersenwindows.com/environmental**.

400 Series windows are Recycled Content Certified by SCS Global Services. For values and certificate details, visit **andersenwindows.com/environmental**.

*Visit andersenwindows.com/warranty for details.

All logos and marks are trademarks of their respective owners.



Andersen® windows and patio doors can make significant contributions to the success of sustainable design strategies

As a charter member of the U.S. Green Building Council, we're active supporters of certified green buildings. Our products can help in pursuing green building programs, such as Leadership in Energy and Environmental Design (LEED®), the National Green Building Standard, Green Globes, GreenStar and more. Below is an overview of how our products can help support LEED v4 and NAHB National Green Building Standard certifications. Visit **andersenwindows.com/sustainability** for more detailed credit summaries.

OUR CERTIFICATIONS THAT CAN CONTRIBUTE TO LEED POINTS:

SCS Global Indoor Air Quality Certification

SCS Global Recycled Content Certification

SUSTAINABILITY CATEGORIES OUR WINDOWS SUPPORT:

LEED for New Construction and Major Renovations

- Integrative process credit
- Energy and atmosphere
- Materials and resources
- Indoor environmental quality

LEED for Homes and Multi-Family Midrises

- Energy and atmosphere
- Materials and resources
- Indoor environmental quality

ANSI ICC/ASHRAE 700-2015

- Resource efficiency
- Energy efficiency
- Indoor environmental quality

SCAN HERE
FOR ANDERSEN SUSTAINABILITY

All logos and marks are trademarks of their respective owners.

21 400 Series Casement & Awning Windows	41 400 Series Replacement Casement & Awning Windows	45 400 Series Complementary Casement Windows	51 400 Series Woodwright® Double-Hung Full-Frame Windows	71 400 Series Woodwright® Double-Hung Insert Windows	79 400 Series Tilt-Wash Double-Hung Full-Frame Windows	91 400 Series Narroline® Double-Hung Window Conversion Kit	93 400 Series Tilt-Wash Double-Hung Insert Windows
101 400 Series Bay & Bow Windows	113 400 Series Gliding Windows	119 400 Series Specialty Windows	139 400 Series Complementary Specialty Windows	143 400 Series Frenchwood® Gliding Patio Doors	151 400 Series Frenchwood® Hinged Inswing Patio Doors	161 400 Series Frenchwood® Patio Door Sidelights & Transoms	165 400 Series Complementary Curved Top Patio Doors
175 Art Glass	177 Exterior Trim	183 Combination Designs, Product Performance & Installation					

ANDERSEN® WINDOWS & DOORS

All trademarks where denoted are marks of their respective owners.
©2025 Andersen Corporation. All rights reserved. 1/25 Part #110003

ANDERSEN WINDOWS & DOORS

PDF NAVIGATION TIPS

Welcome to an overview of the enhanced navigation tools available in this PDF. **Before you begin be sure you are using the latest version of Adobe Acrobat Reader (March 2023)**, available at – **https://get.adobe.com/reader/**

BOOKMARK NAVIGATION

1

Acrobat will display the bookmarks panel on the right side when you open the PDF.

Bookmarks are the easiest way to find specific product information.

Select a topic and that page will be displayed.

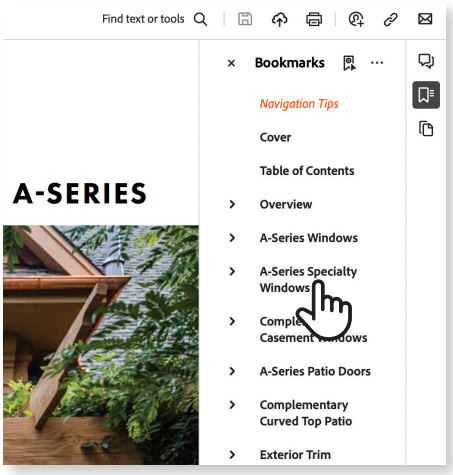

2

In the bookmarks panel you can print a specific section by holding down your **"Ctrl" key and clicking** on the section you want to print. Then choose **Print Section**.

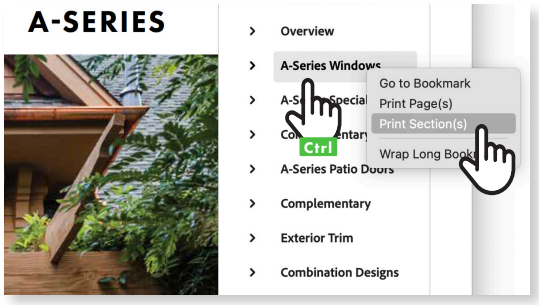

LINKS AND URL NAVIGATION

3

You can also use the **embedded links** to navigate between sections. All links are underlined in blue.

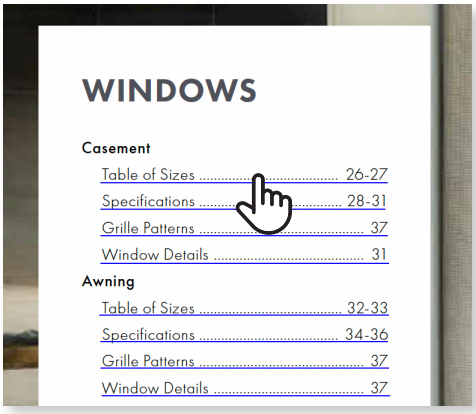

4

Website links automatically open in your web browser.

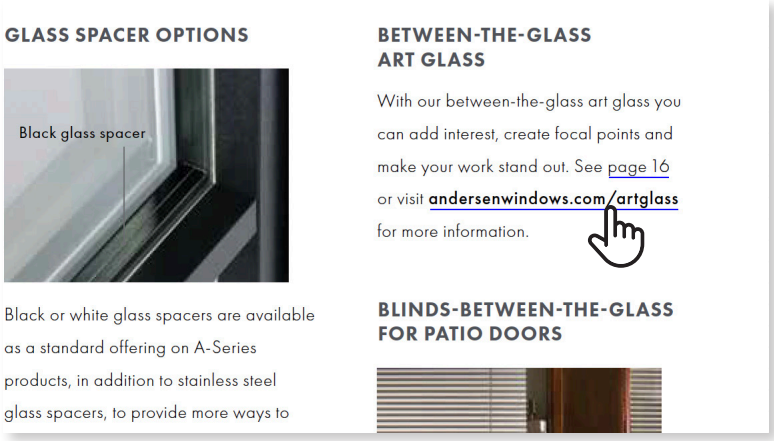

PDF NAVIGATION TIPS *(continued)*

TOOL BAR NAVIGATION

5

Top left side navigation tools.



The "commenting" and "highlight" tools here.

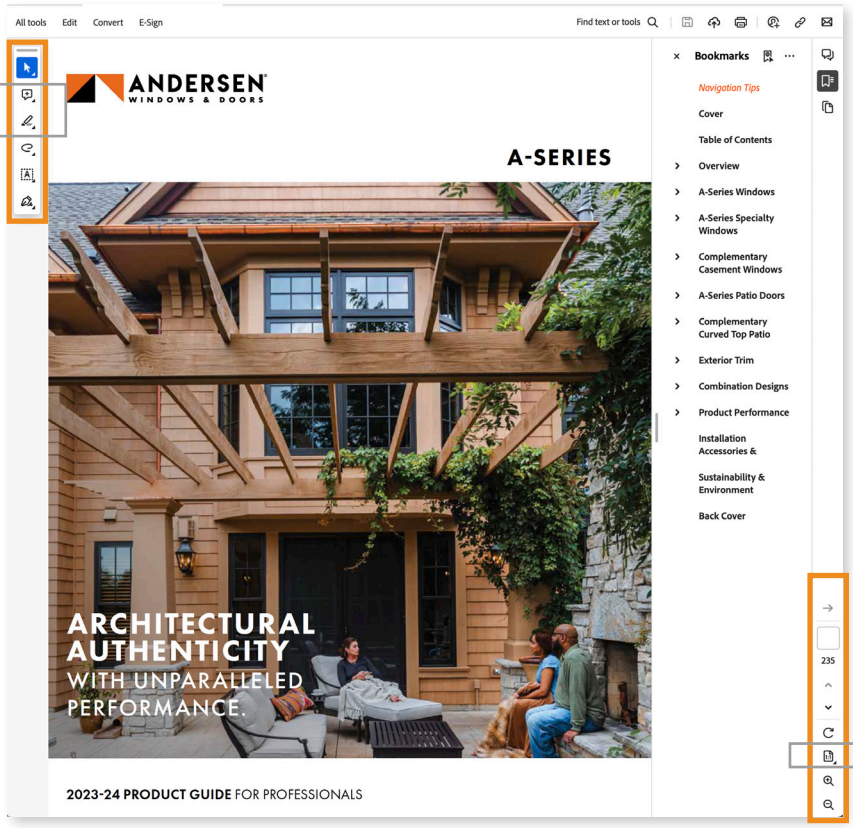

6

Lower right side navigation tools.



Click on the icon shown above to **scroll through a list of additional tools.**

Add additional navigation tools by adjusting the default settings in Acrobat.

7

Add **"Previous View"** tool.

Go to the lower right side navigation tools. **Scroll through the list and "pin" the previous view icon**



A left facing arrow will be added to the tool bar allowing you to go back to the previous page you viewed.

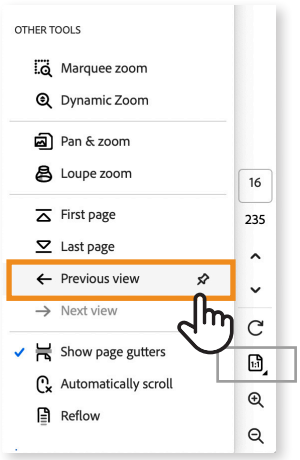

8

Add **"Loupe Zoom"** tool.

Go to the lower right side navigation tools. **Scroll through the list and "pin" the loupe zoom icon.**



The loupe icon will be added to the tool bar allowing you to zoom in on details without changing the page view.

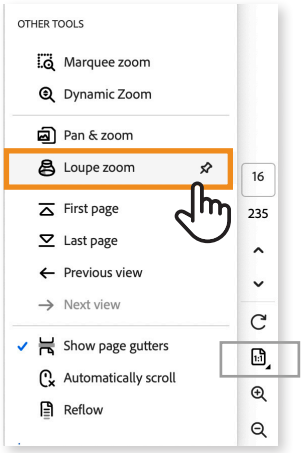

We are always looking for ways to improve.
Please send feedback to **webmarketing@andersencorp.com**.