RESIDENTIAL & COMMERCIAL BUILDING MATERIALS

DIGITAL DOWNLOAD

Kuiken Brothers
Company Incorporated
Since 1912

Moulding & Millwork
Catalog

Fall 2026

$6.95

www.KuikenBrothers.com

For over 110 years, Kuiken Brothers, a family owned and operated business, has been supplying top quality residential and commercial building materials to contractors and homeowners. We have dedicated ourselves to providing the very best in quality, service and product selection. We are pleased to present you with this Moulding & Millwork catalog and hope that you find it to be a valuable resource in planning your projects.

On behalf of the Kuiken family and our knowledgeable and experienced employees, we remain committed to providing you with the finest products and services available, at all of our convenient locations.

Sincerely,

Douglas R. Kuiken
President, Kuiken Brothers Company, Inc

Kuiken Brothers Company, Inc.

Residential & Commercial Building Materials

Since 1912

MISSION STATEMENT

To be the leading provider of Residential and Commercial Building Materials in the markets we serve.

To exceed our customers' needs and expectations by consistently providing quality materials and solutions in a responsive, respectful manner within a framework and culture of honesty, integrity and professionalism.

MOTTO

GET IT RIGHT!

KUIKEN BROTHERS COMPANY, INC inventories one of the largest collections of premium stock moulding profiles in the region. We are certain you will find a package of profiles that will quickly add charm and turn a house into a home or a commercial space steeped in sophistication. Keep your projects moving forward. Choose Kuiken Brothers stock moulding profiles.

KUIKEN BROTHERS COMPANY INC.
RESIDENTIAL & COMMERCIAL BUILDING MATERIALS *Since 1912*

COMMERCIAL BUILDING MATERIALS

DRYWALL ▪ STEEL STUDS ▪ CEILING SYSTEMS ▪ INSULATION ▪ COMMERCIAL DOORS & HARDWARE

LOCATIONS WITH LARGEST COMMERCIAL BUILDING MATERIAL INVENTORY

SUCCASUNNA, NJ: 33 ROUTE 10 EAST, SUCCASUNNA, NJ 07876
(973)968-7700

EMERSON, NJ: 246 KINDERKAMACK RD EMERSON, NJ 07630
(201)262-6666

GARFIELD, NJ: 485 RIVER DR., GARFIELD, NJ 07026
(973)772-0044

NEWARK, NJ: 500 DOREMUS AVE., NEWARK, NJ 07105
(973)638-7200

KUIKENBROTHERS.COM/COMMERCIAL

KUIKEN BROTHERS CO., INC.

visit

www.KuikenBrothers.com

Kuiken Brothers is a jobsite friendly site that can be viewed just as easily on your mobile device as your desktop. When was the last time you actually flipped through that printed product installation guide (be honest!)? Video mobile friendly websites are revolutionizing the way our industry learns about new products and proper installation methods. The New KuikenBrothers.com promises to deliver video and large photos, perfect for huddling around an iPad or iPhone on a jobsite.

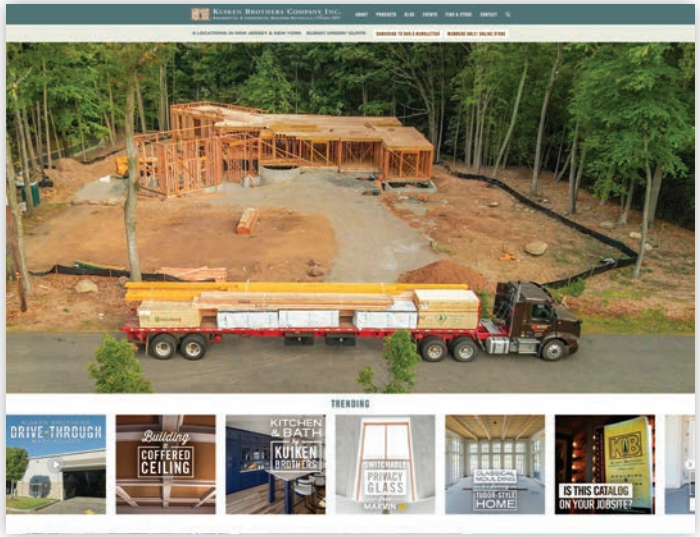

KB
CLASSICAL
MOULDING
CLASSICAL MOULDING INSPIRED BY
18TH CENTURY PATTERNS
READY FOR YOUR NEW OLD HOUSE, WITHOUT THE LEAD TIME
Kuiken Brothers Classical Moulding is a collection of primed poplar moulding profiles (16' lengths, in-stock). The designs are inspired by Georgian, Federal, Greek Revival, Colonial Revival and Traditional Revival homes built over 200 years ago.
IN STOCK
Casings.....pgs 16 – 29
Base..... pgs 44 – 47, 54 – 56
Crown .....pgs 64 – 71
Chair Rail.....pgs 94 – 97
Panel .....pgs 99 – 102
Grown, Harvested & Milled In the U.S.A.
PICK UP A CLASSICAL MOULDING CATALOG IN-STORE OR REQUEST ONE ON KUIKENBROTHERS.COM
WWW.KUIKENBROTHERS.COM/CLASSICAL
DOWNLOAD THE CLASSICAL MOULDING CATALOG

5/4" Cap
KB376
1"x4"
KB381
1"x6"
1"x4"
KB384
1"x6"
KB883
KB267
KB
CLASSICAL
MOULDING
KUIKEN BROTHERS
MODERN CRAFTSMAN
MOULDING COLLECTION
The Modern Craftsman Moulding Collection blends the simplicity of profiles found in Craftsman style homes built in the early 20th Century while still maintaining proper scale and proportion, inspired by our Classical Moulding Collection. These profiles are not scant. They are all milled from poplar which creates deep incisions and crisp edges, ensuring each shadow line is purposeful and meaningful. It works great today as a simple, yet bold application for those looking to achieve a modern look with a classical edge.
IN STOCK
Grown, Harvested & Milled In the U.S.A.
PICK UP A MODERN CRAFTSMAN CATALOG IN-STORE OR REQUEST ONE ON KUIKENBROTHERS.COM
DOWNLOAD THE MODERN CRAFTSMAN CATALOG
WWW.KUIKENBROTHERS.COM/MODERNCRAFTSMAN

DOWNLOAD CAD FILES AT

WWW.KUIKENBROTHERS.COM

Architects and Interior Designers

Add detail to your plans by downloading specific moulding profiles to your blueprints. Download the CAD file that accompanies each profile. Pictured below is the online version of Kuiken Brothers stock moulding catalog.

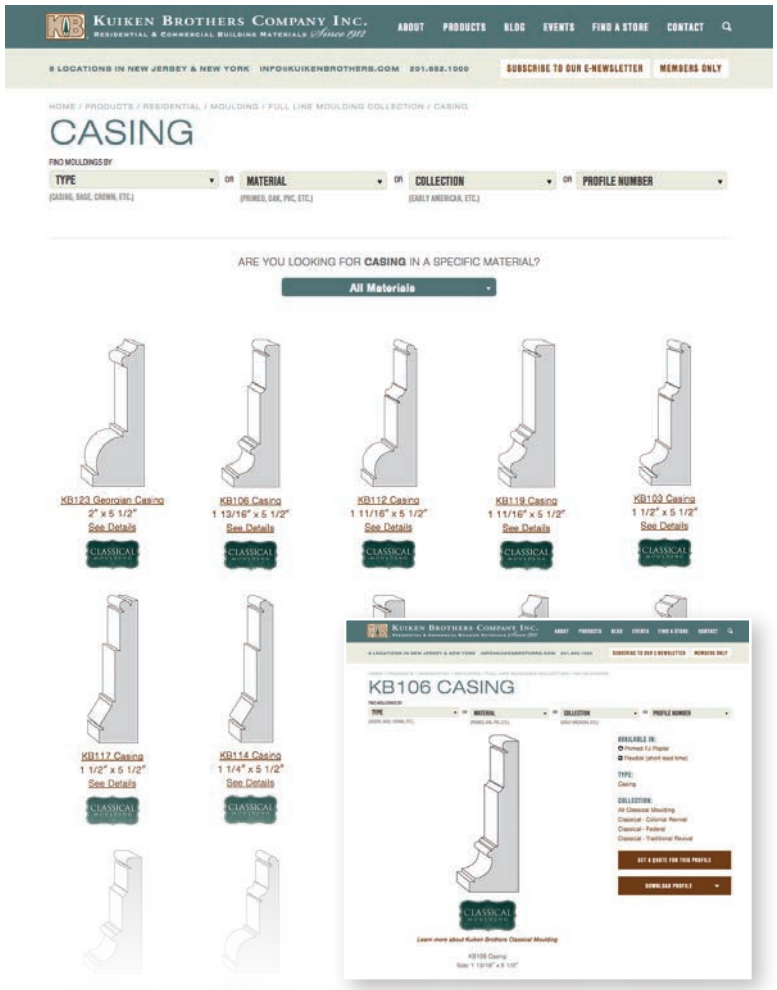

Index

Volume 19, 2026

HOW TO ORDER KUIKEN BROTHERS MOULDING: 256
Casings: 16-43
Bases: 44-62
Crowns: 64-81
Combination Ideas: 63, 82-86, 104, 170-198

Mouldings

Astragal & Mullion Center 116, 117
Back Band. 20, 41
Baluster. 112
Base Cap Moulding 53-57
Base Mouldings. 44-63
Beadboard. 154-158
Bed Mouldings 68-70, 77
Brick Moulding 121, 143
Bull Nose 109
Casings 16-43
Chair Rail Mouldings 94-98
Clam Stop. 111
Classical Moulding 16-29, 41-47, 54-56, 64-70, 87, 90, 93-102, 116, 170-198
Colonial Stop 109-110
Corner Guard 118-119
Cove Mouldings . . .65, 71, 74-75, 89-91, 142
Crown Mouldings. 64-87, 134, 138-141
Dentil Mouldings 69
Door & Window Casing 16-43
Drip Cap 121, 143
Extension Jamb. 123-124
Exterior Surrounds 152
Exterior Trim 138-152
Floor Mouldings 61
Glass Bead. 120
Half Round Mouldings. 115
Hand Rails 107-108
Hardwood Boards. 237
Historic Moulding 16-29, 41-47, 54-56, 64-70, 87, 90, 93-102, 116, 170-198
Kleer TruEDGE 150

VISIT OUR SHOWROOMS TO VIEW MOULDING, WINDOW AND DOOR COMBINATIONS

INDEX *continued*

KleerWrap 151
Landing Tread 130
Lattice Mouldings 113
Mantel Combinations 170-173, 186-193
MDF Moulding 133-136
Modern Craftsman . . 30-33, 48-53, 71-74, 97
Moulding Design Guide 170-198
Mullion Center 116-117
Neck Moulding 81
Nickel Gap 148-149, 154
Nose & Cove Mouldings 88
Nosing 130
Outside Corner 118, 119
Panel Mouldings 99-104
Parting Strip 112
Pattern Boards 154-157
Picture Frame/Rail Moulding 120
Pilaster Mouldings 92-93
Plinth Blocks 132
Pole Mouldings 114
Prestige Line 134-136
PVC Mouldings 138-149
Quarter Round Mouldings 106
Quirk 101
Reeded Accent 92-93
Saddles 131
Sanitary Corner Guard 118
Shelf Edge 122
Shingle Band 140-141
Shiplap 148-156
Shoe Moulding 53, 60, 111
Siding 160-163
Sill 131, 144-145
Sill Nosing 144
Skewback 122
Skirl Siding 161
Solid Crown 80-81, 140-141
Stool 125-129
Stop Mouldings 109-111
Tongue & Groove Flooring 164-165
Tongue & Groove Siding . 146-147, 155-157
Wainscot 146-149, 154-158
Wainscot Cap 159
Window & Door Casing 16-43
Window Sill 129, 144-145
Window Stool 125-129

PATTERN STOCK BOARDS

Beaded Ceiling/Wainscot 147, 154-158
Boards 152, 166, 240-242
Flooring 164-165
Nickel Gap 148-149, 154
Paneling/Planking 154-158
Roof Decking 163
Shiplap 154-156
Siding 160-162
Standard Wood Boards 166
Stepping 165
Wainscot 146-149
Wainscot 154-158

WINDOWS, DOORS CABINETRY & OTHER MILLWORK

Architectural Hardware 232
Cabinets 250-254
Columns 244-245
Door Handing Instructions 228
Door Hardware 227
Doors – Commercial 230-234
Doors – Hollow Metal 230, 234
Doors – Residential 218-227
Exterior Trim 138-152, 240-242
Flexible Moulding 238
Hardware 231-233
Hardwood Millwork 239
PVC Boards & Panels 240
Shutters 246-247
Windows 202-216

PATTERN INDEX

We have arrived at a numbering system for our mouldings by grouping like mouldings in a series. For example, the 100 series is casing related moulding; the 200 series is base related moulding and so on. You will find that this index is streamlined for ordering your mouldings.

PAT.	PAGE
KB100	34
KB102	21
KB103	21
KB104	22
KB105	34
KB106	22
KB107	29, 47
KB108	29, 47
KB109	25
KB110	34
KB111	29, 47
KB112	25
KB113	24
KB114	24
KB115	35
KB116	23
KB117	23
KB118	26
KB119	26
KB120	39
KB122	27
KB123	28
KB125	39
KB126U	39
KB130	36
KB132	36
KB133	38
KB135	38
KB136	16
KB137	16
KB138	17
KB139	17
KB140	38
KB142	37
KB145	37
KB150	40
KB155	40
KB160	37
KB161	30
KB162	30
KB163	31
KB164	31
KB165	93
KB170	92
KB172	93
KB175	92
KB180	40
KB185	40
KB190	121
KB195	121
KB196	20, 41
KB197	41

PAT.	PAGE
KB198	41
KB199	20, 41
KB200	58
KB202	58
KB205	35, 58
KB210	60
KB212	61
KB215	60
KB217	61
KB220	59
KB221	56, 88, 101
KB222	45
KB223	46
KB224	53
KB225	59
KB226	46
KB227	44
KB228	48
KB229	48
KB230	59
KB231	44
KB232	45
KB233	49
KB234	49
KB235	57, 103
KB240	57, 103
KB241	56
KB242	56
KB242	102
KB243	55, 90, 101
KB244	54
KB244	102
KB245	57
KB246	53, 101
KB247	57
KB248U	57
KB249	54, 102
KB250	111
KB251	55, 90, 102
KB252	32, 50
KB253	32, 50
KB254	32, 51
KB255	106
KB256	51
KB260	106
KB265	106
KB266	52
KB267	52
KB270	106
KB275	106
KB280	106
KB285	106

PAT.	PAGE
KB290	61
KB292	61
KB293	53
KB295	58
KB300	91
KB303	91
KB305	91
KB307	89
KB308	89
KB310	89
KB311	68
KB312	77
KB313	68
KB314	64
KB315	79
KB316	67
KB317	66
KB318	66
KB319	69
KB320	79
KB321	69
KB324	70
KB325	78
KB326	67
KB327	69
KB329	68, 96
KB330	78
KB331U	75
KB332	75
KB334U	75
KB335	77
KB336	70
KB340	76
KB341	71
KB342	71
KB345	76
KB350	76
KB352	77
KB353	65
KB354	64
KB355	81
KB357	90, 103
KB358	90
KB359	90
KB360	81
KB361	65
KB362	81
KB365	81
KB368	81
KB370	80
KB375	80
KB376	33, 97

PATTERN INDEX *continued*

PAT.	PAGE
KB378	74
KB379	74
KB380	80
KB381	73
KB384	73
KB386	72
KB387	72
KB389	88
KB390	88
KB392	88
KB393	88
KB394	88
KB400	98
KB401	18
KB401	95
KB402	20, 94
KB403	95
KB404	19, 94
KB405	98
KB406	18, 96
KB407	19, 97
KB409U	98
KB410	98
KB415	107
KB420	108
KB425	108
KB430	107
KB445	118
KB450	118
KB455	118
KB465	119
KB470	119
KB480	114
KB485	114
KB500	113
KB505	113
KB510	113
KB515	113
KB520	113
KB525	113
KB530	113
KB540	112
KB545	112
KB550	112
KB555	112
KB560	115
KB565	115
KB570	115
KB605	111
KB610	111
KB615	111
KB630	110
KB635	60, 110
KB640	60, 110
KB645	109
KB650	109
KB654	100, 116
KB655	109
KB657	116
KB658	109

PAT.	PAGE
KB660	117
KB665	117
KB670	117
KB685	116
KB686	116
KB700	123
KB705	124
KB710	124
KB720	123
KB725	127
KB730	128
KB735	128
KB740	128
KB745	127
KB750	127
KB755	125
KB760	125
KB765	125
KB770	125
KB775	126
KB780	126
KB785	131
KB786	131
KB787	131
KB790	129
KB796	130
KB797	130
KB799	131
KB805	159
KB808	41, 159
KB810	159
KB815	121
KB825	120
KB840	120
KB845	104
KB855	122
KB860	122
KB865	122
KB870	104
KB871	100
KB872	104
KB873	100
KB874	55
KB874	99
KB875	104
KB876	54, 99
KB878	100
KB879	100
KB880	101
KB881	99
KB882	99
KB883	53, 101
KB895	130
KB900	155
KB901PVC	148
KB902	155
KB904	156
KB904 PVC	146
KB904TE	149
KB905 PVC	147

PAT.	PAGE
KB906	156
KB908	155
KB908 PVC	146
KB910	156
KB912	156
KB914	154
KB915	154
KB915TE	149, 160
KB916	160
KB918	160
KB920	160
KB922	161
KB924	161
KB925	161
KB926	162
KB927	162
KB928	162
KB930	154
KB932	163
KB934	164
KB935OAK	164
KB936	164
KB938	165
KB938MAH	165
KB942	165
KB975	129
PB518*	132
PB550*	132
PVC2852	142
PVC5041	138
PVC5045	139
PVC5047	139
PVC5049	138
PVC5063	139
PVC5075	141
PVC5150	142
PVC5158	140
PVC5164	142
PVC5168	141
PVC5180	143
PVC5210	140
PVC5234	143
PVC5245	142
PVC5283	143
PVC5287	140
PVC5311	144
PVC7435	144
PVC7650	144
PVC7712	141
PVC7931	143
PVC7960	141
PVC7962	140
PVC9608	145
4812PSB2	158
4812PVB212	158
48516RB	158
Skirl Wavy Edge Siding	161

MOULDING

The following moulding section represents our stock patterns and indicates the various species and types of wood in-stock or readily available. For radiused or arched applications, we offer Duraflex flexible moulding or can custom mill from MDF or poplar. We have made every attempt to show the profiles as accurately as possible in our continuing goal of excellence.

While we show and offer many different moulding patterns in our catalog, we realize there may be occasions when the individual preference is for something slightly different. Custom made mouldings are available in different profiles and different species of wood. We can certainly accommodate your requirements.

Door & Window Casing

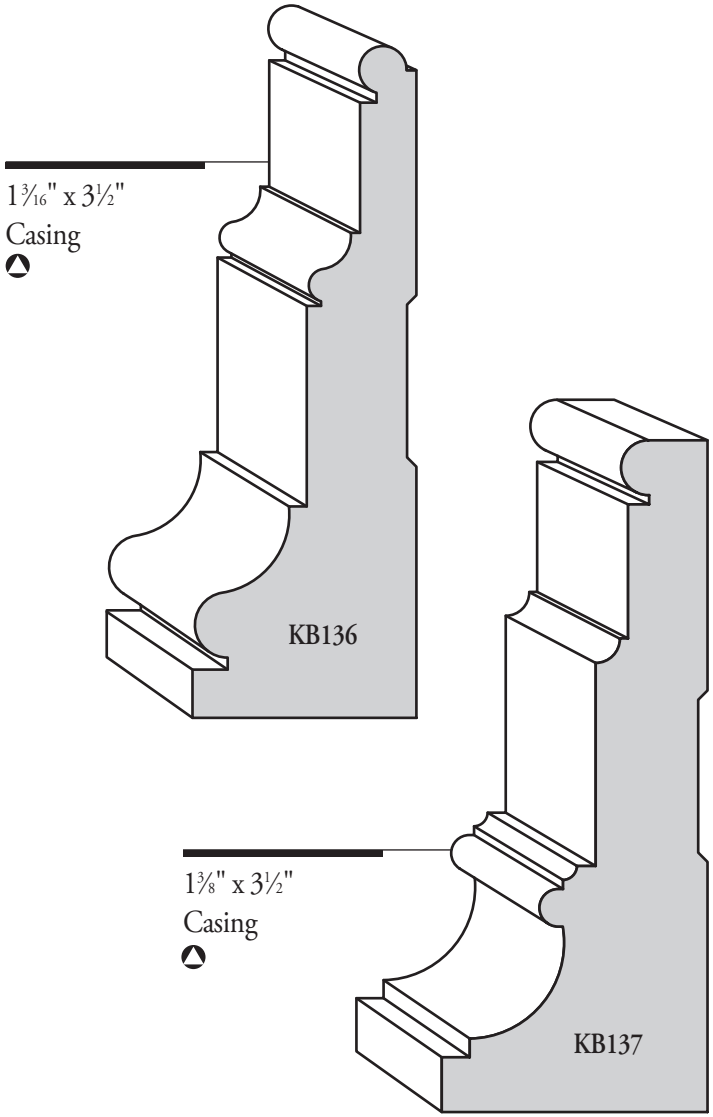

● Clear Pine | ○ Primed FJ Pine | Primed FJ Poplar | Lightweight Primed MDF

Door & Window Casing

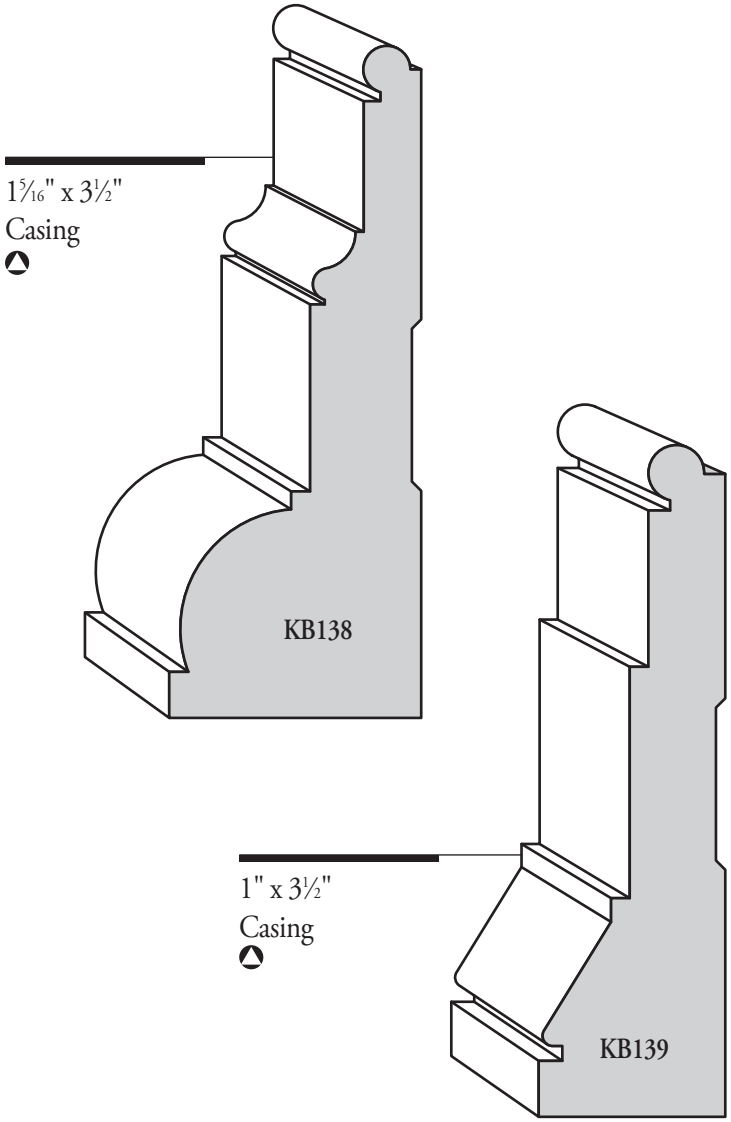

● Clear Pine | ○ Primed FJ Pine | Primed FJ Poplar | Lightweight Primed MDF

Door & Window Casing

1 7/16" x 3½"
Casing

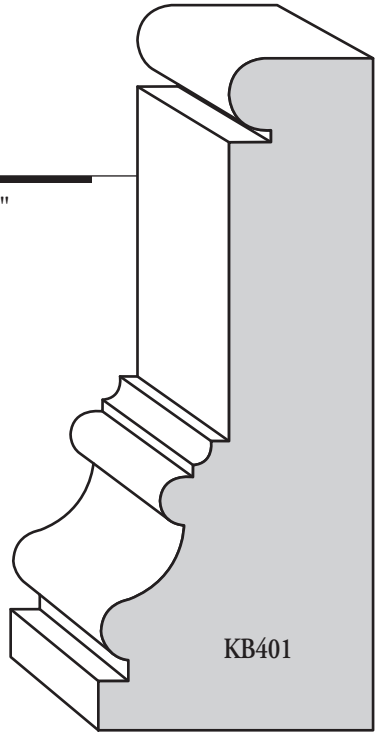

1 9/16" x 3½"
Casing

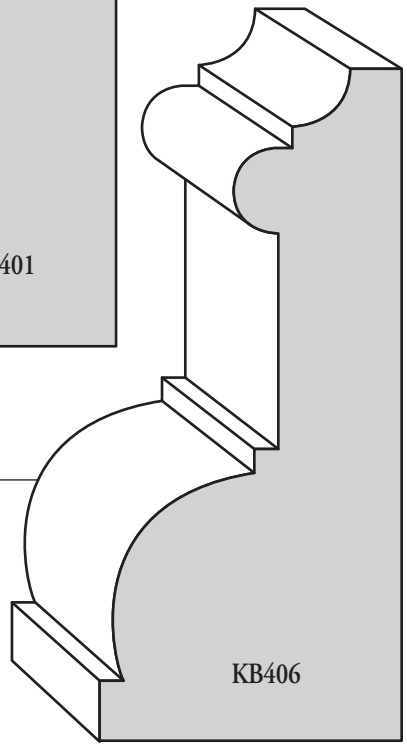

● Clear Pine | ○ Primed FJ Pine | Primed FJ Poplar | Lightweight Primed MDF

Door & Window Casing

1¼" x 3½"
Casing

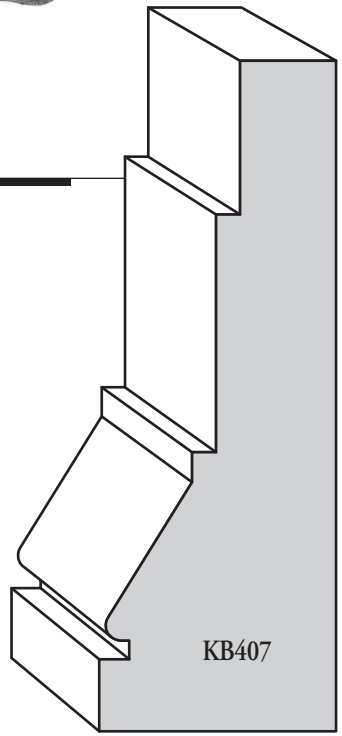

1 13/16" x 4⅛"
Casing

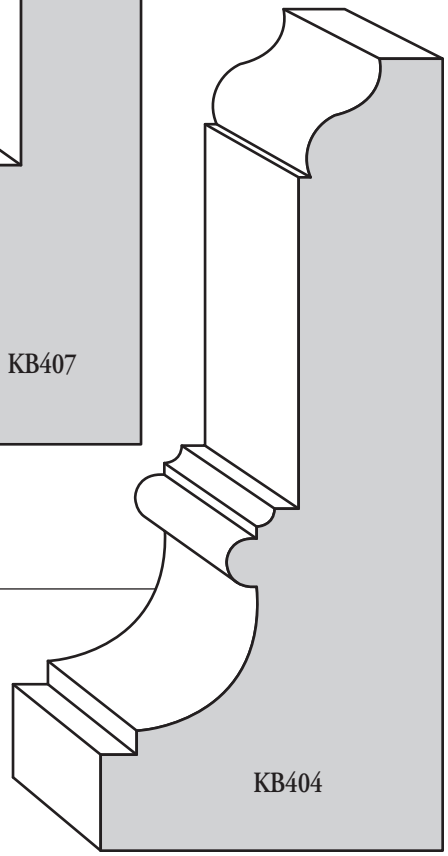

● Clear Pine | ○ Primed FJ Pine | Primed FJ Poplar | Lightweight Primed MDF

Door & Window Casing

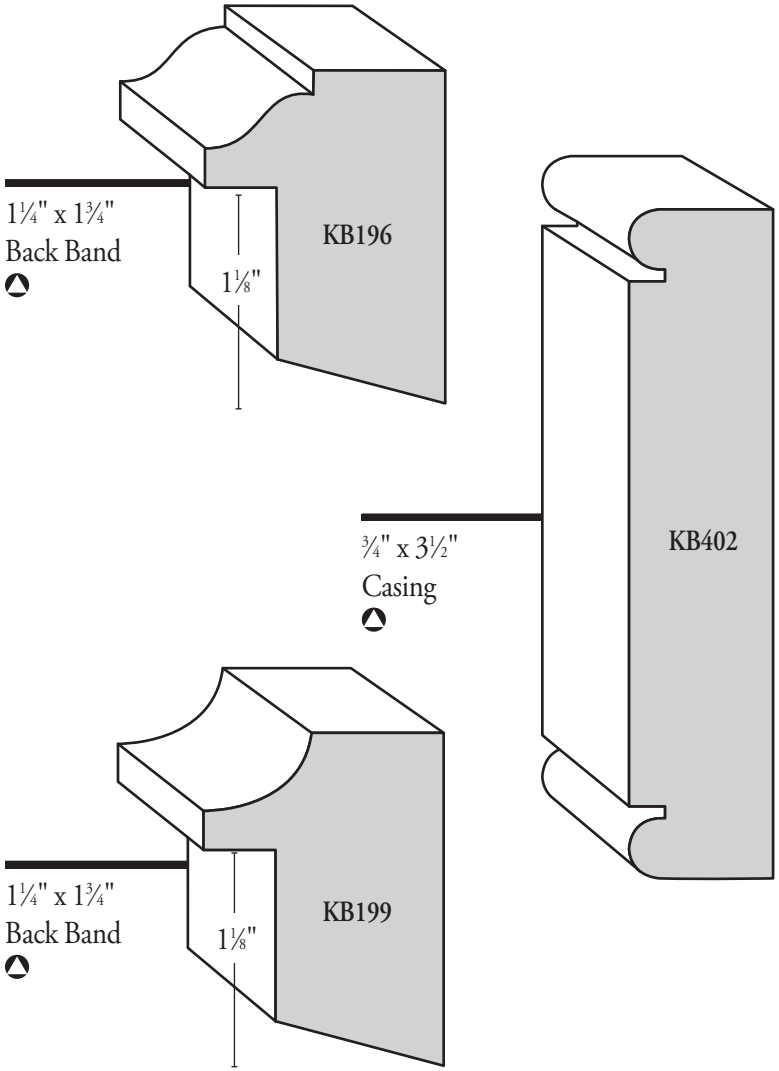

● Clear Pine | ○ Primed FJ Pine | Primed FJ Poplar | Lightweight Primed MDF

Door & Window Casing

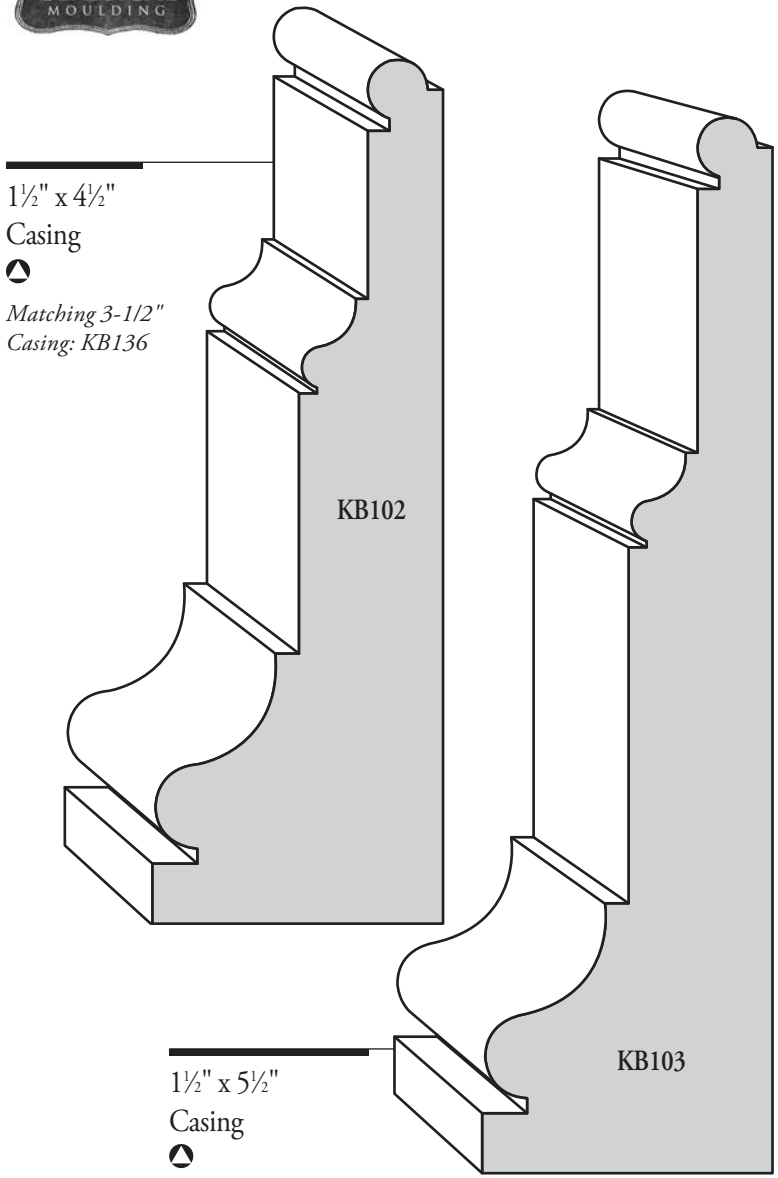

● Clear Pine | ○ Primed FJ Pine | Primed FJ Poplar | Lightweight Primed MDF

Door & Window Casing

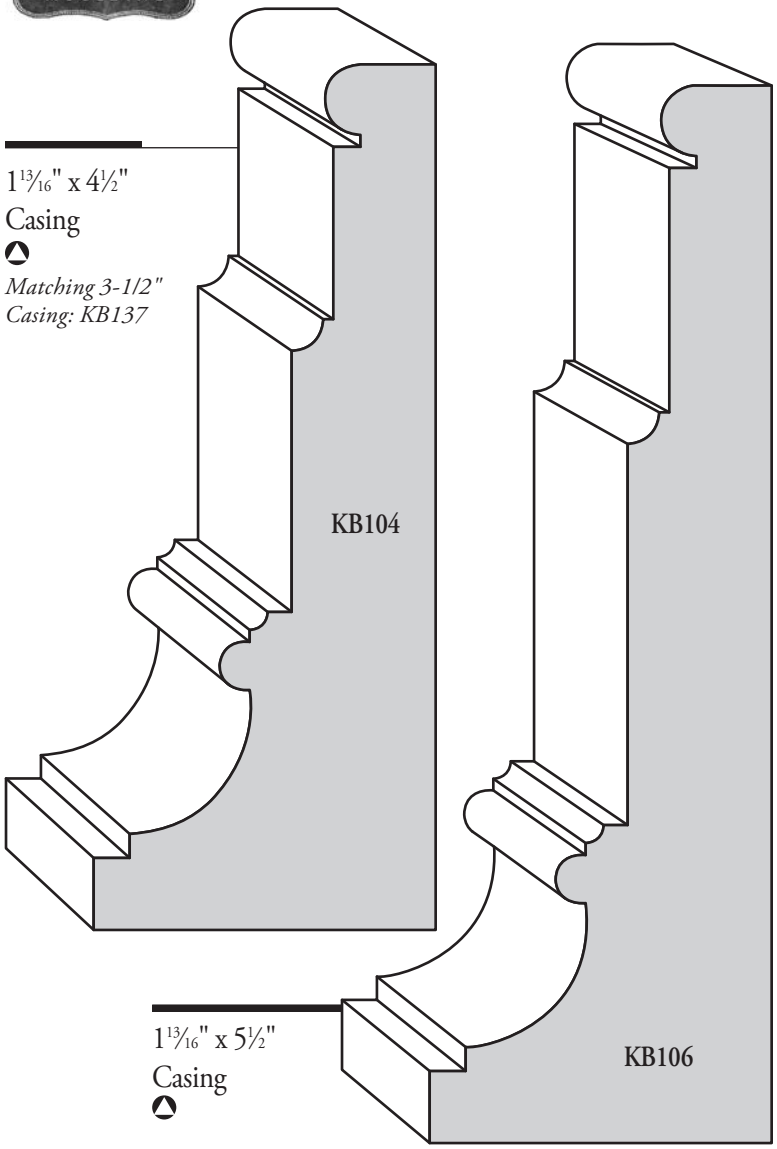

● Clear Pine	○ Primed FJ Pine	Primed FJ Poplar	Lightweight Primed MDF

Door & Window Casing

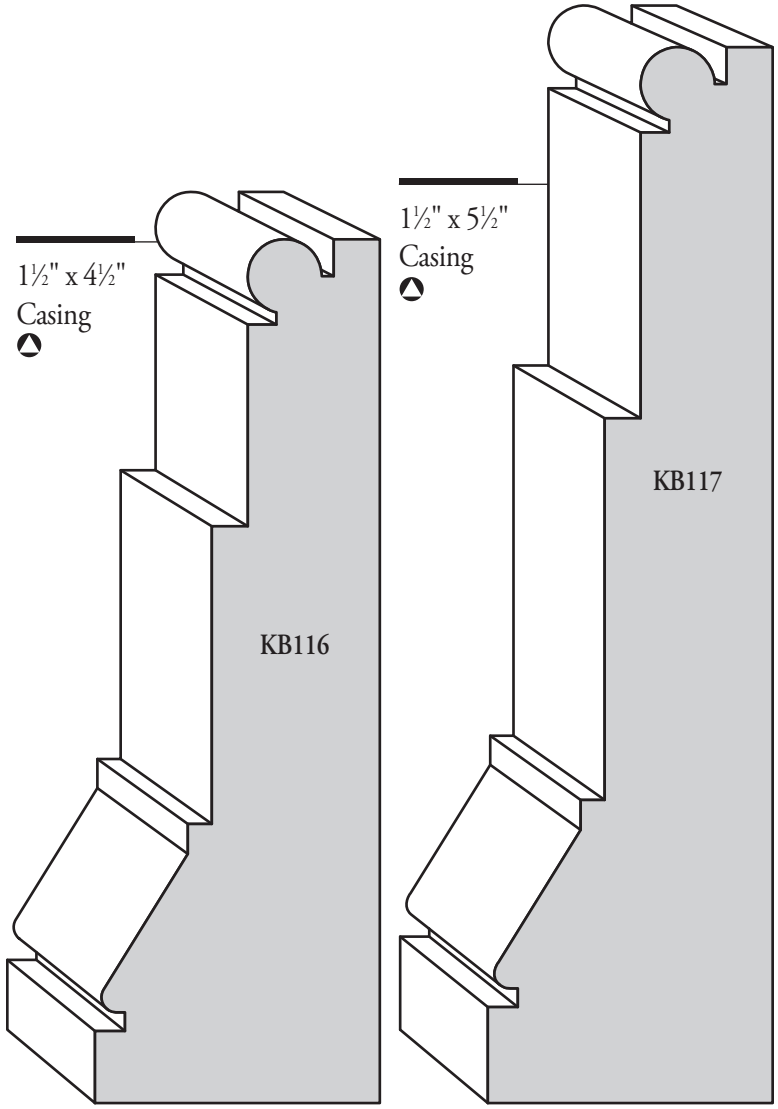

● Clear Pine	○ Primed FJ Pine	Primed FJ Poplar	Lightweight Primed MDF

Door & Window Casing

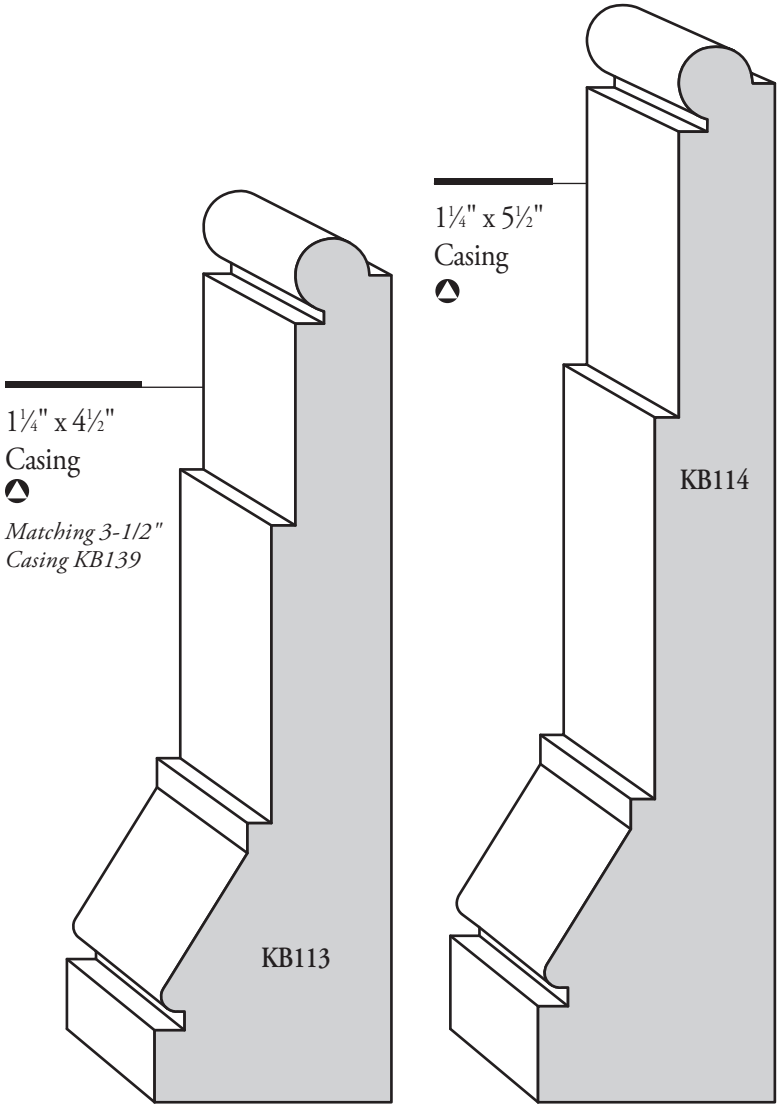

● Clear Pine | ○ Primed FJ Pine | Primed FJ Poplar | Lightweight Primed MDF

Door & Window Casing

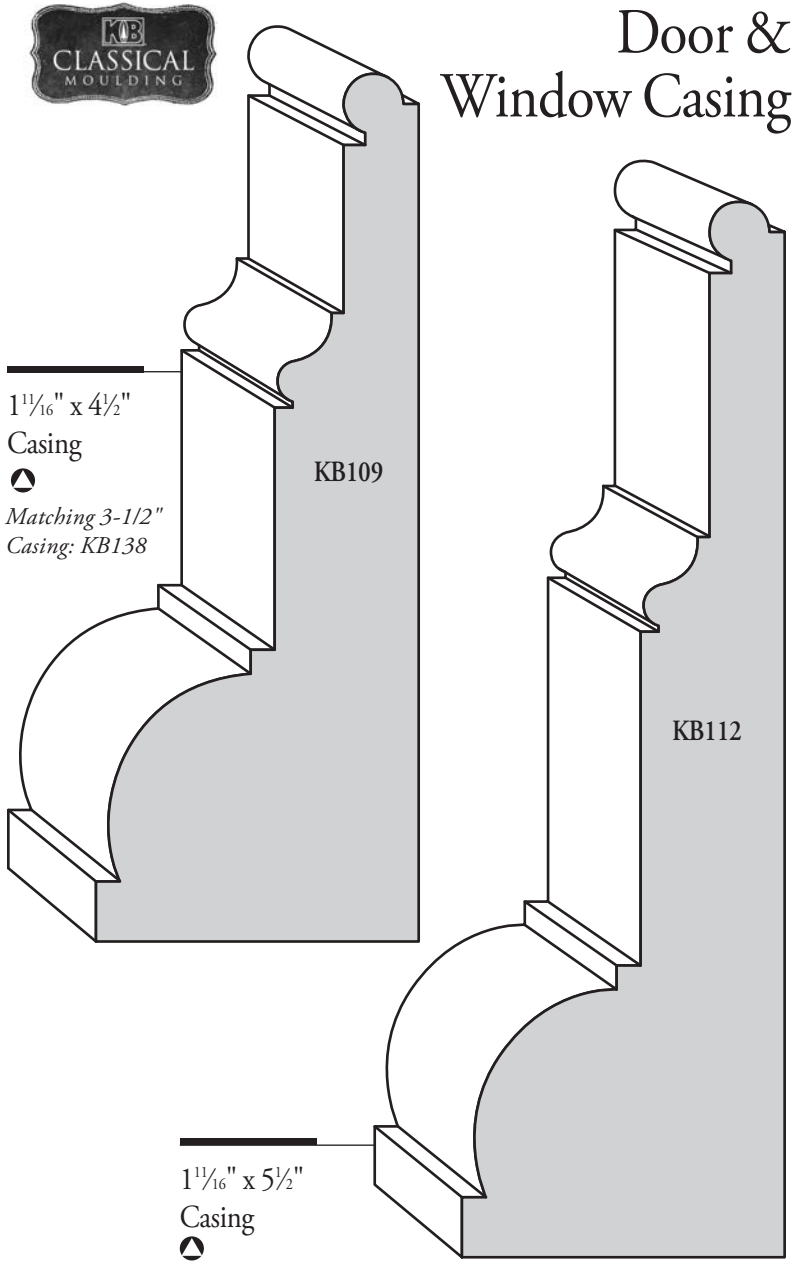

● Clear Pine | ○ Primed FJ Pine | Primed FJ Poplar | Lightweight Primed MDF

Door & Window Casing

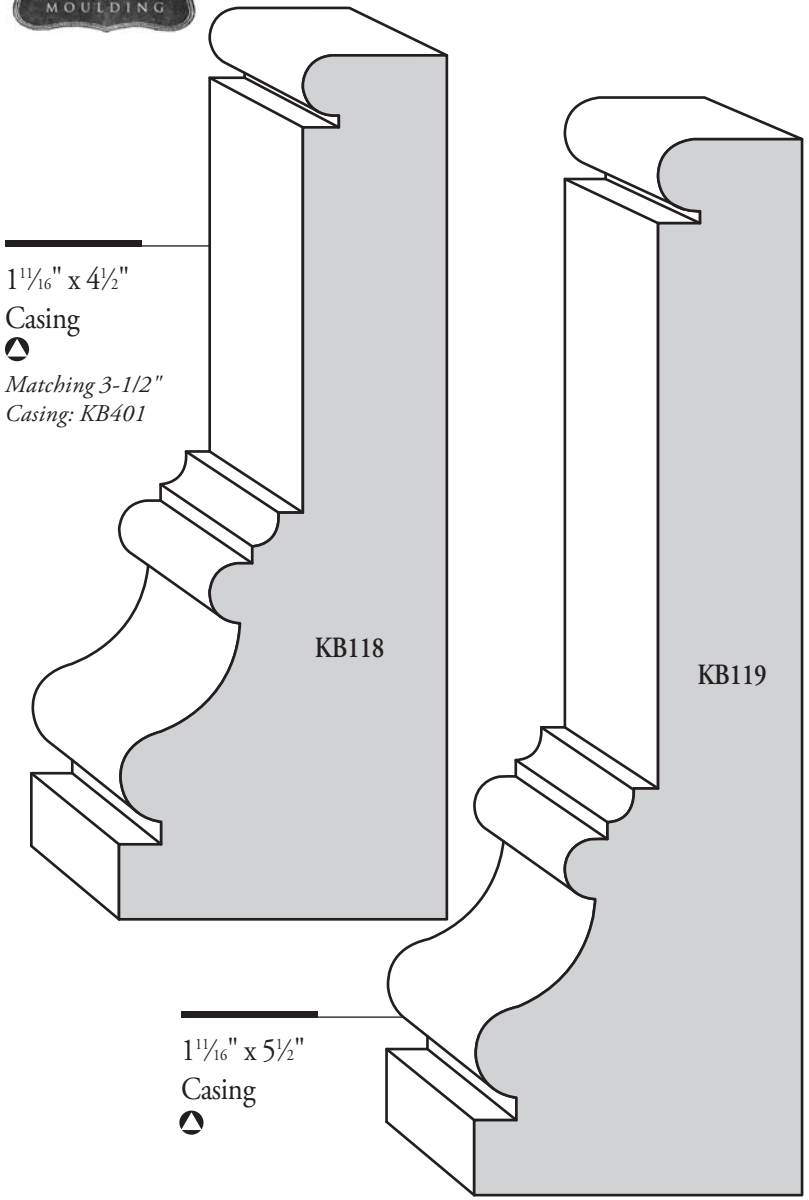

● Clear Pine | ○ Primed FJ Pine | Primed FJ Poplar | Lightweight Primed MDF

Door & Window Casing

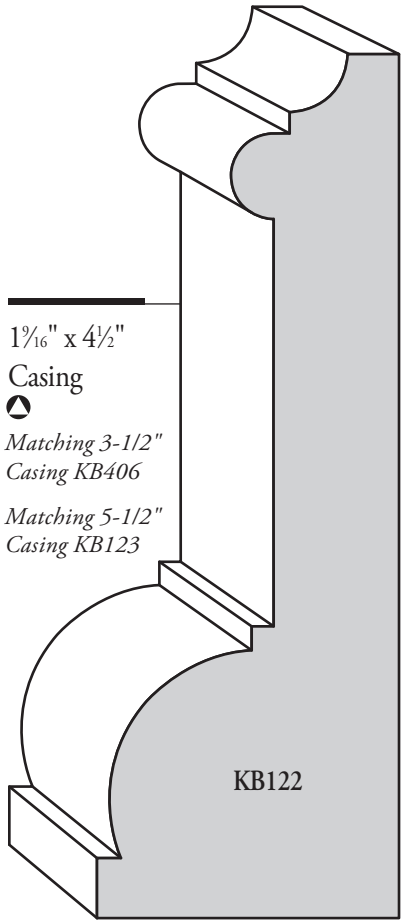

● Clear Pine | ○ Primed FJ Pine | Primed FJ Poplar | Lightweight Primed MDF

Door & Window Casing

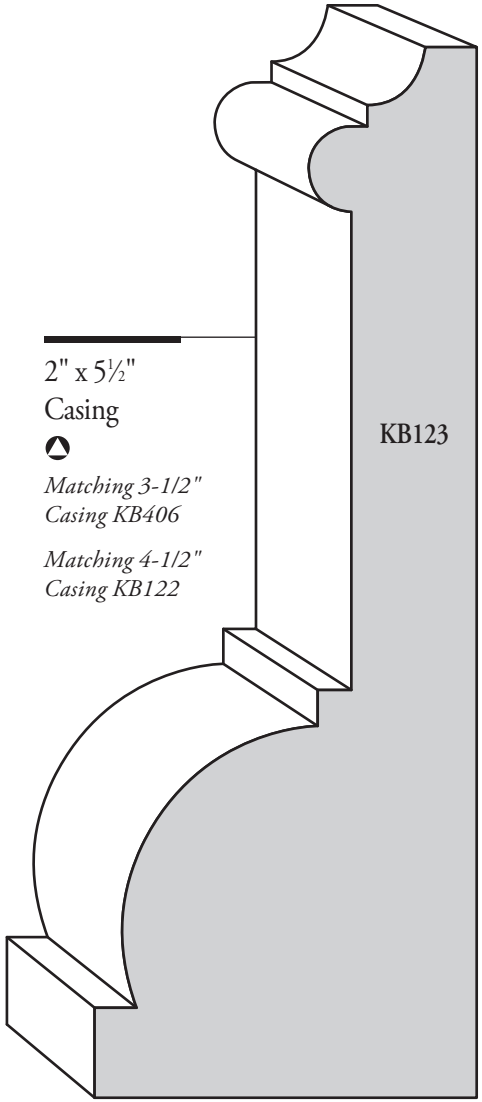

● Clear Pine | ○ Primed FJ Pine | ▲ Primed FJ Poplar | Lightweight Primed MDF

Door & Window Casing

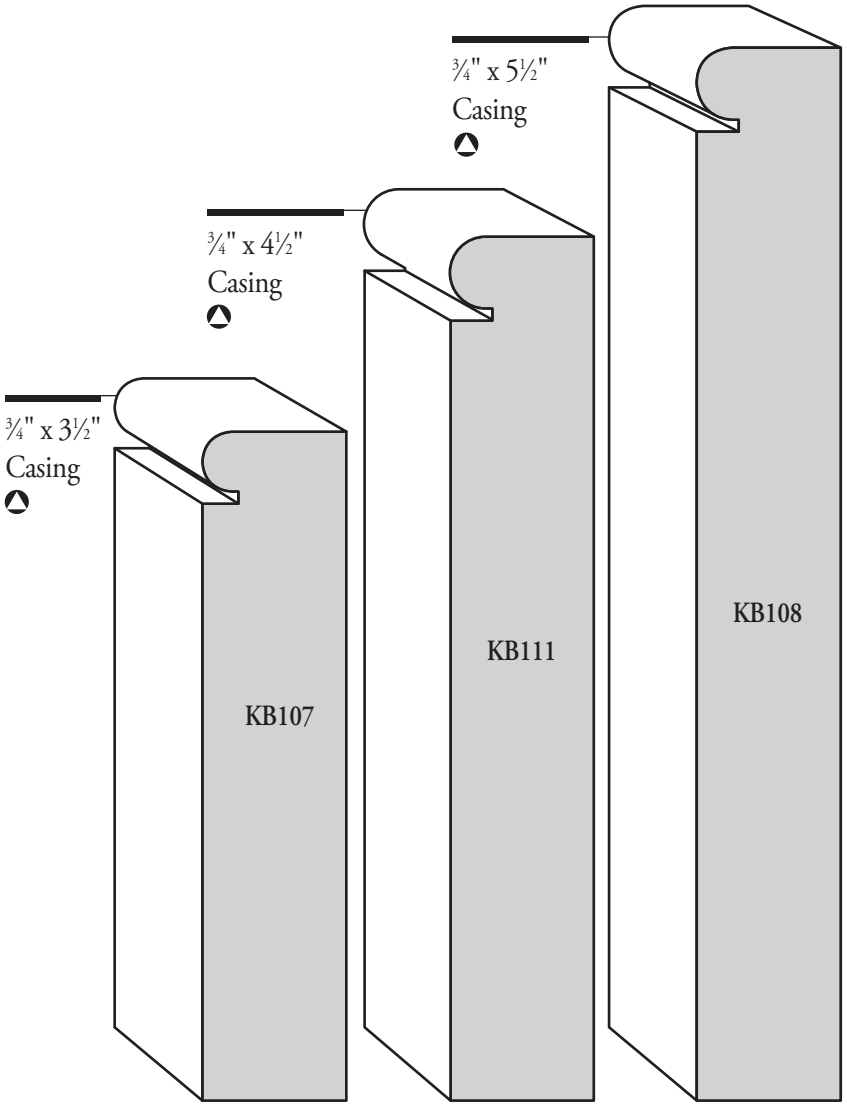

● Clear Pine | ○ Primed FJ Pine | ▲ Primed FJ Poplar | Lightweight Primed MDF

KUIKEN BROTHERS
MODERN CRAFTSMAN
MOULDING COLLECTION

Door & Window Casing

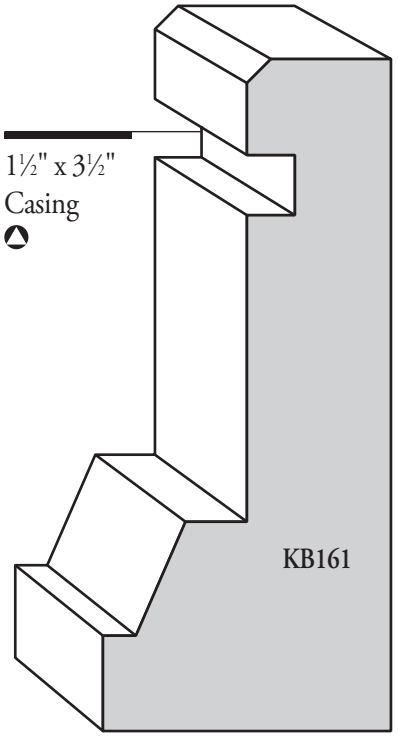

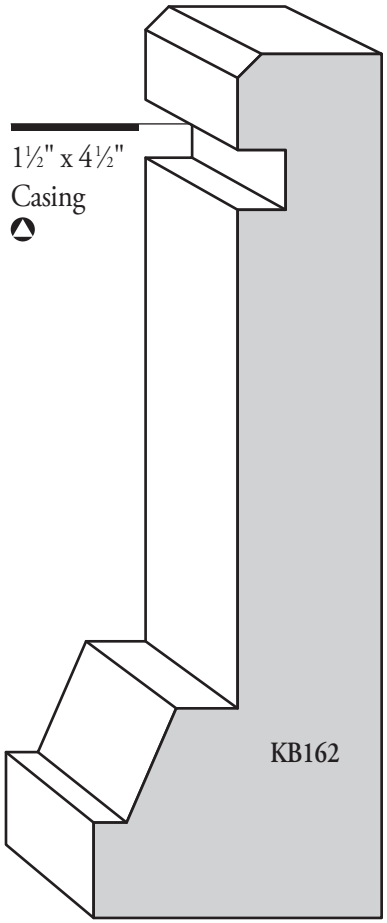

● Clear Pine | ○ Primed FJ Pine | △ Primed FJ Poplar | Lightweight Primed MDF

KUIKEN BROTHERS
MODERN CRAFTSMAN
MOULDING COLLECTION

Door & Window Casing

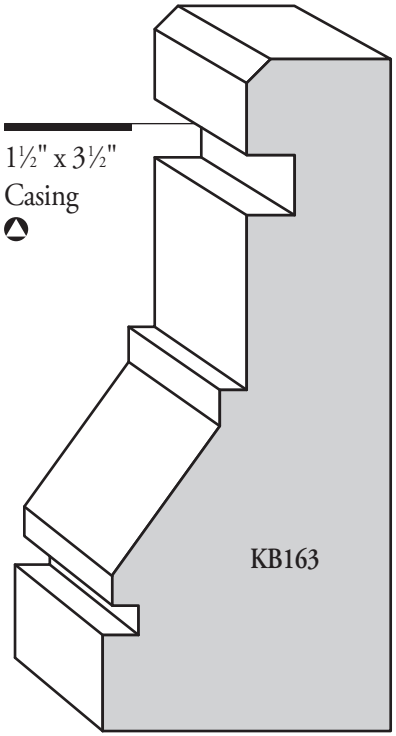

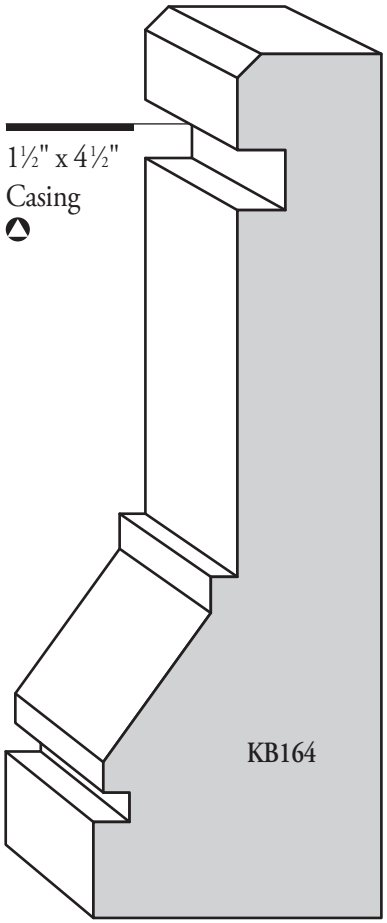

● Clear Pine | ○ Primed FJ Pine | △ Primed FJ Poplar | Lightweight Primed MDF

KUIKEN BROTHERS
MODERN CRAFTSMAN
MOULDING COLLECTION

Door & Window Casing

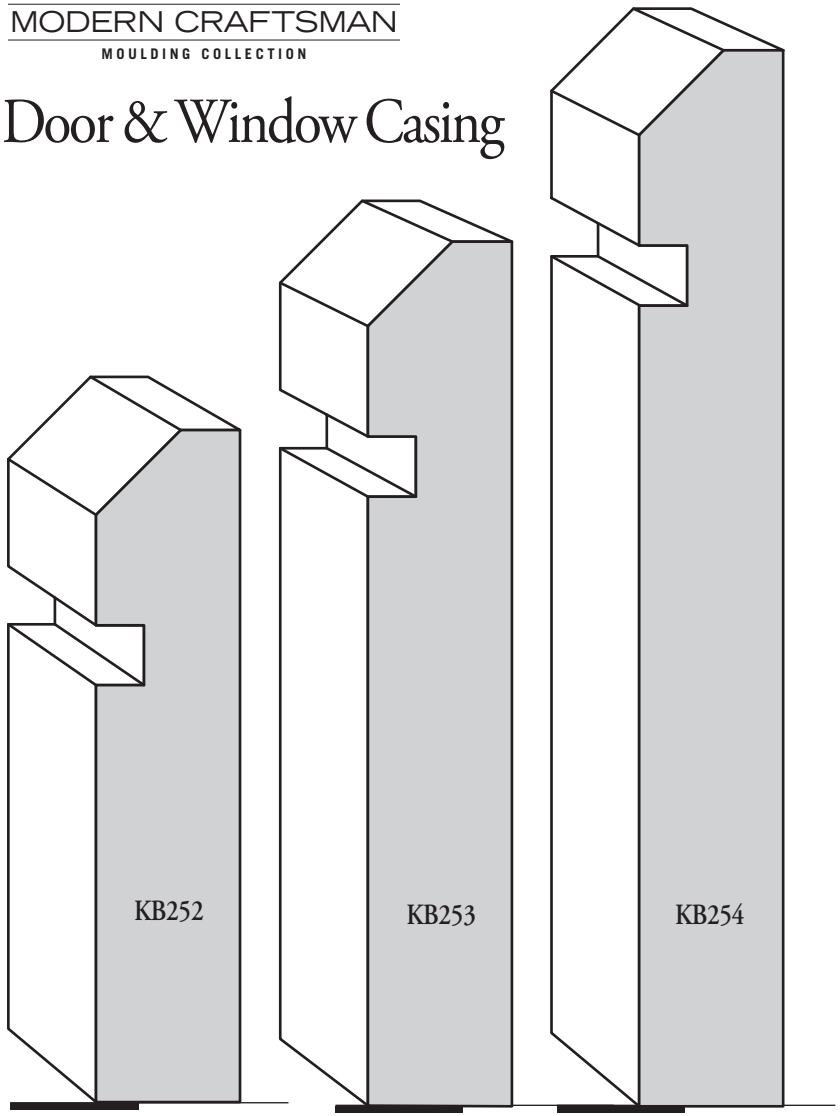

¾" x 3½"
Casing/Base

¾" x 4½"
Casing/Base

¾" x 5½"
Casing/Base

● Clear Pine | ○ Primed FJ Pine | Primed FJ Poplar | Lightweight Primed MDF

KUIKEN BROTHERS
MODERN CRAFTSMAN
MOULDING COLLECTION

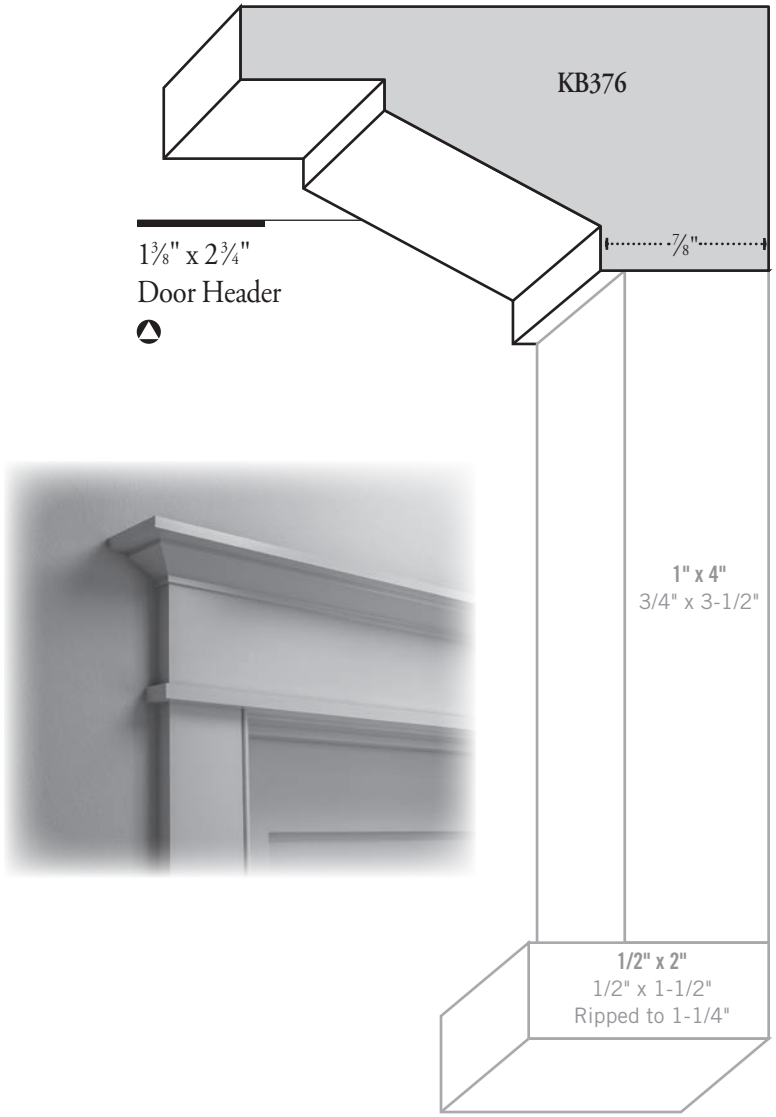

1⅜" x 2¾"
Door Header

● Clear Pine | ○ Primed FJ Pine | Primed FJ Poplar | Lightweight Primed MDF

Door & Window Casing

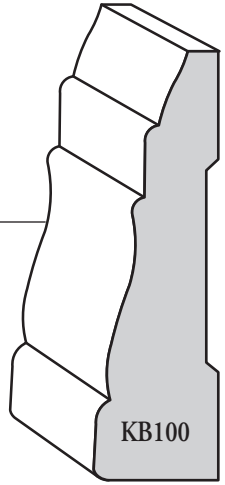

11/16" x 2¼"
Colonial Casing
● ○

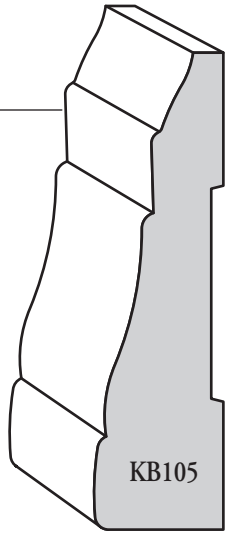

11/16" x 2½"
Colonial Casing
● ○

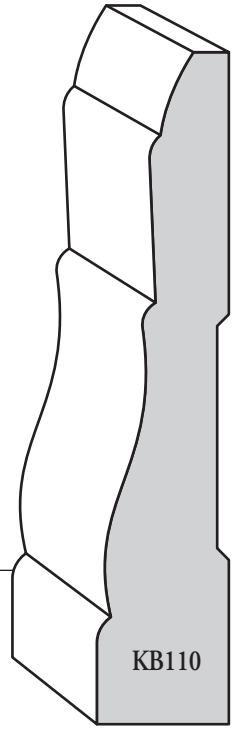

11/16" x 3½"
Colonial Casing
● ○

● Clear Pine | ○ Primed FJ Pine | Primed FJ Poplar | Lightweight Primed MDF

Door & Window Casing

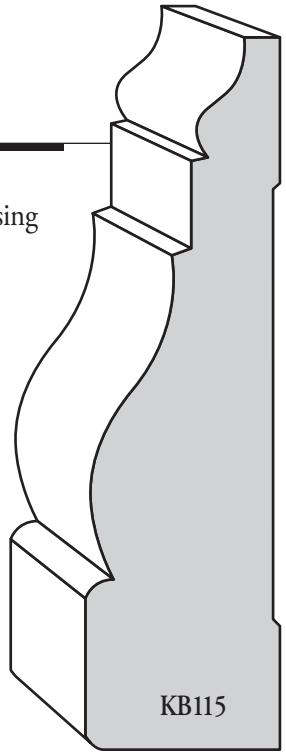

1" x 3¾"
Colonial Casing
○

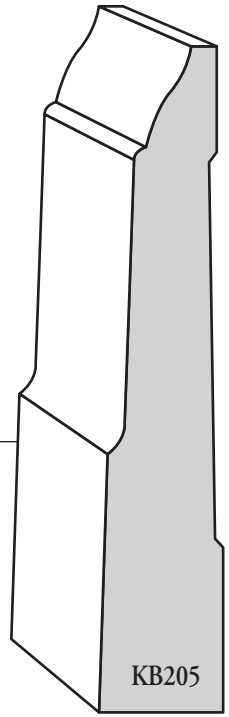

11/16" x 3½"
Colonial Casing/Base
○

● Clear Pine | ○ Primed FJ Pine | Primed FJ Poplar | Lightweight Primed MDF

Door & Window Casing

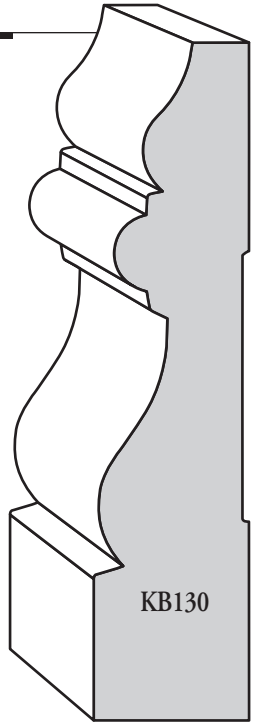

13/16" x 3 1/2"
Heavy Beaded
Colonial Casing

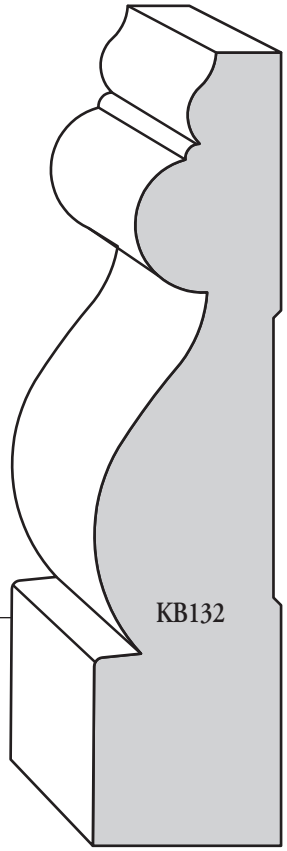

1" x 4 1/4"
Heavy Beaded Colonial Casing

**Primed FJ Pine*
4-1/8" actual

● Clear Pine | ○ Primed FJ Pine | △ Primed FJ Poplar | Lightweight Primed MDF

Door & Window Casing

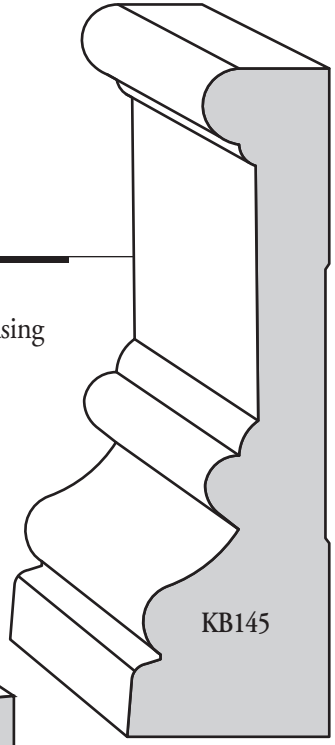

1 1/16" x 3 1/2"
Windsor Casing

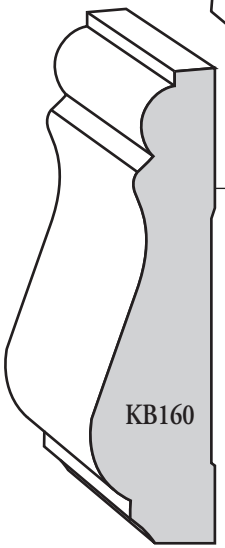

11/16" x 2 1/2"
Camelback Casing

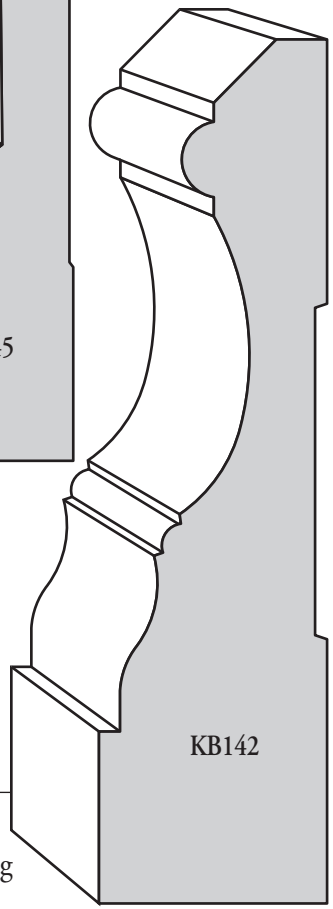

1 1/8" x 4 1/2"
Bead & Cove Casing

● Clear Pine | ○ Primed FJ Pine | △ Primed FJ Poplar | Lightweight Primed MDF

Door & Window Casing

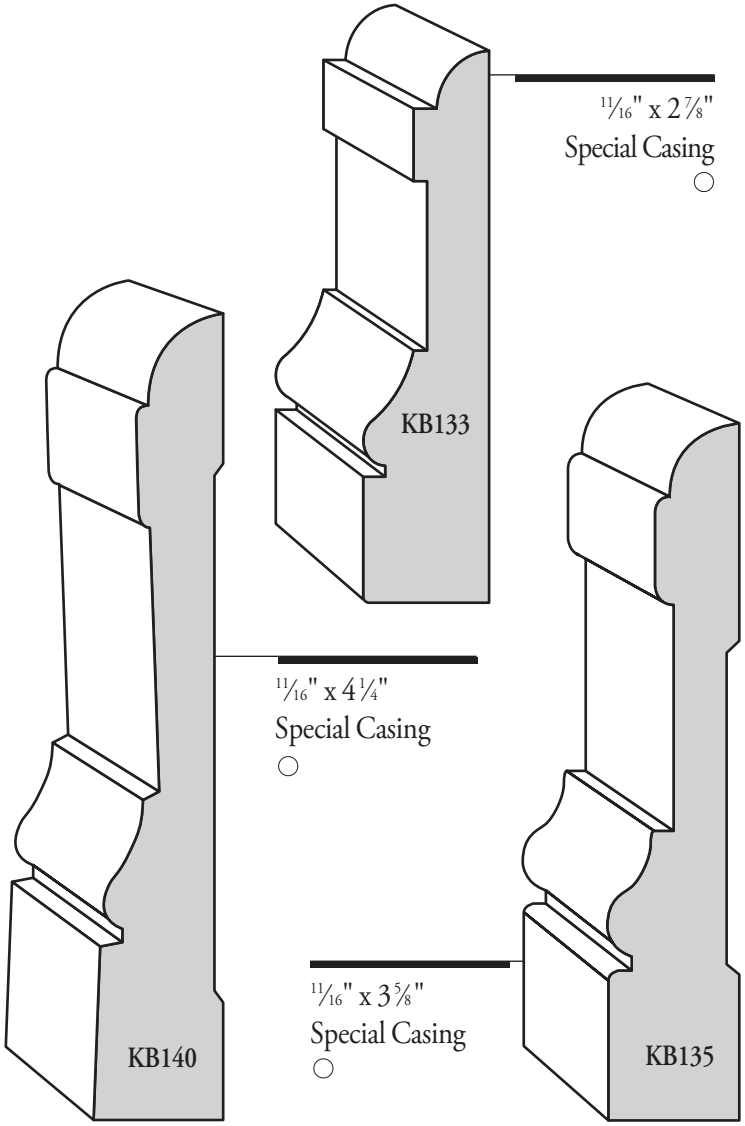

11/16" x 2 7/8"
Special Casing

11/16" x 4 1/4"
Special Casing

11/16" x 3 5/8"
Special Casing

● Clear Pine | ○ Primed FJ Pine | △ Primed FJ Poplar | Lightweight Primed MDF

Door & Window Casing

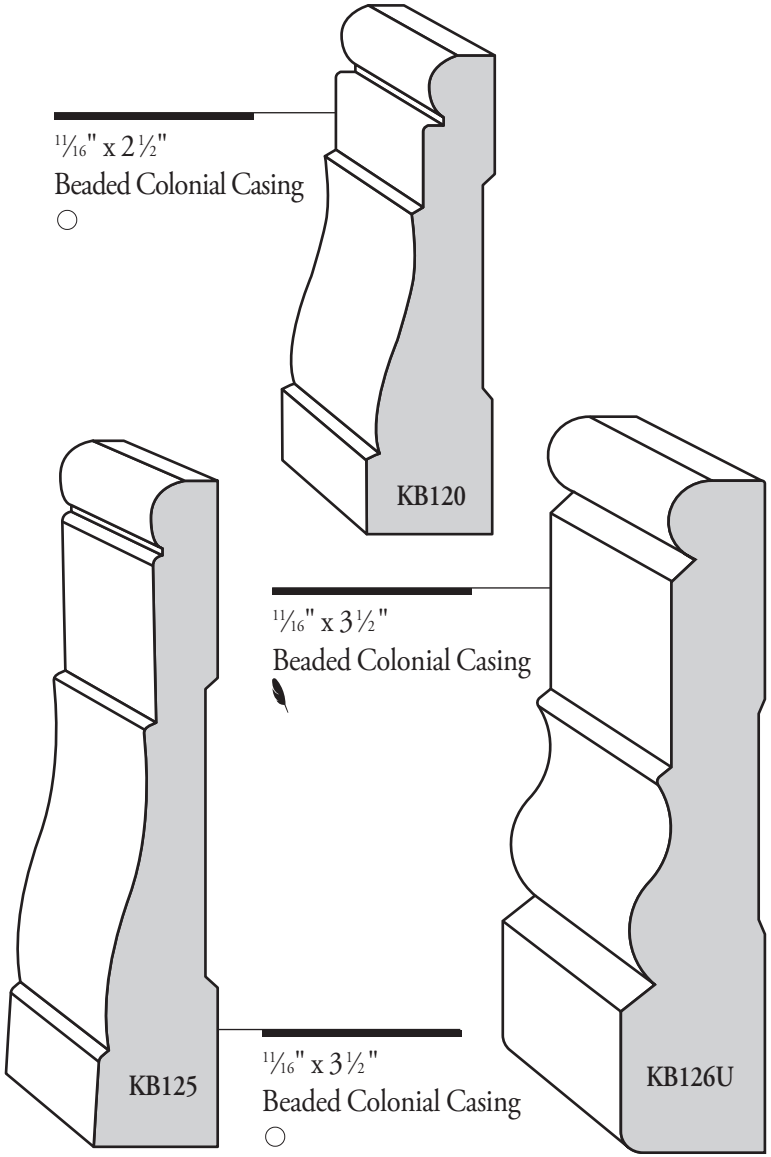

11/16" x 2 1/2"
Beaded Colonial Casing

11/16" x 3 1/2"
Beaded Colonial Casing

11/16" x 3 1/2"
Beaded Colonial Casing

● Clear Pine | ○ Primed FJ Pine | △ Primed FJ Poplar | Lightweight Primed MDF

Door & Window Casing

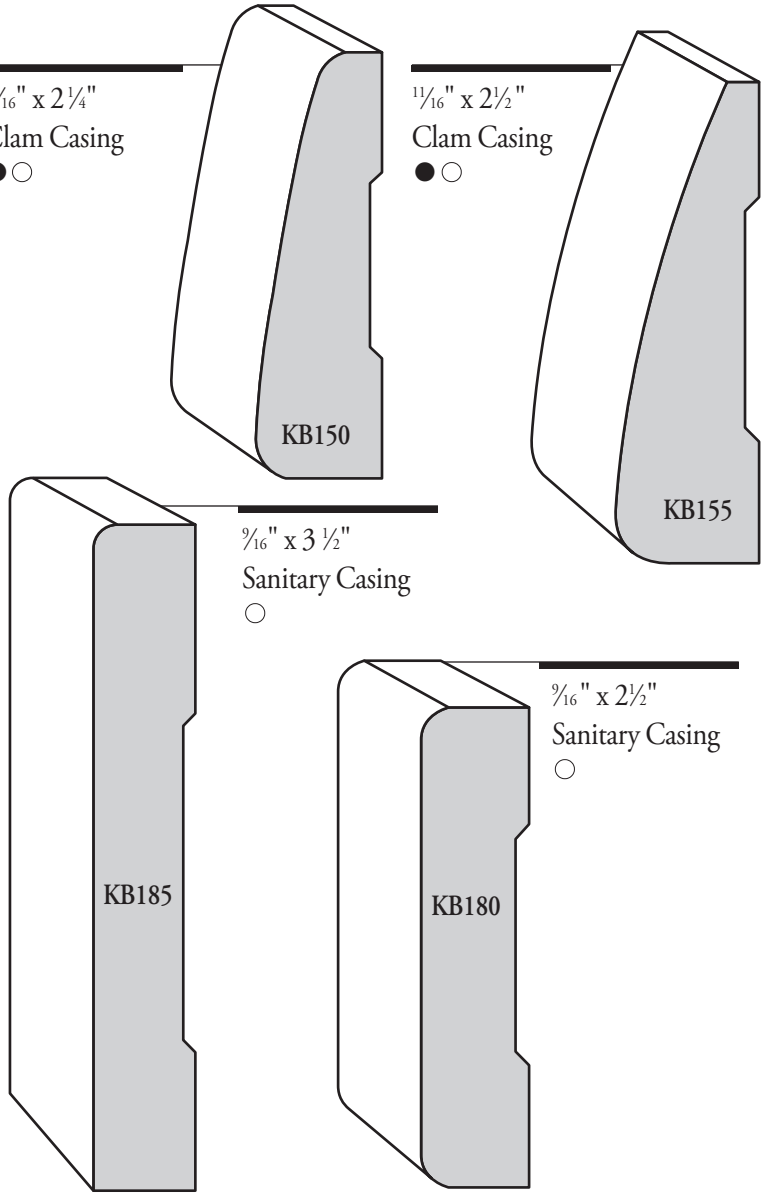

● Clear Pine | ○ Primed FJ Pine | ▲ Primed FJ Poplar | Lightweight Primed MDF

Back Band Moulding

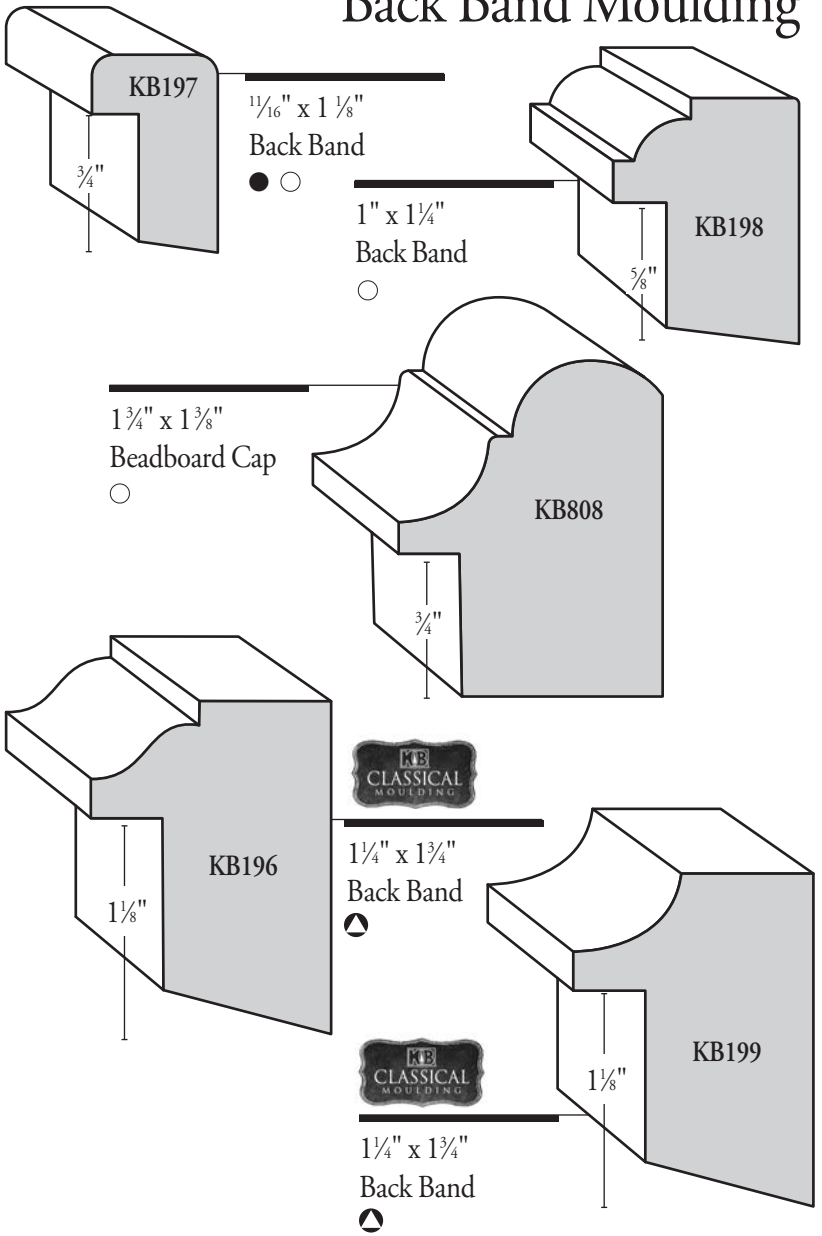

● Clear Pine | ○ Primed FJ Pine | ▲ Primed FJ Poplar | Lightweight Primed MDF

Classical Casing

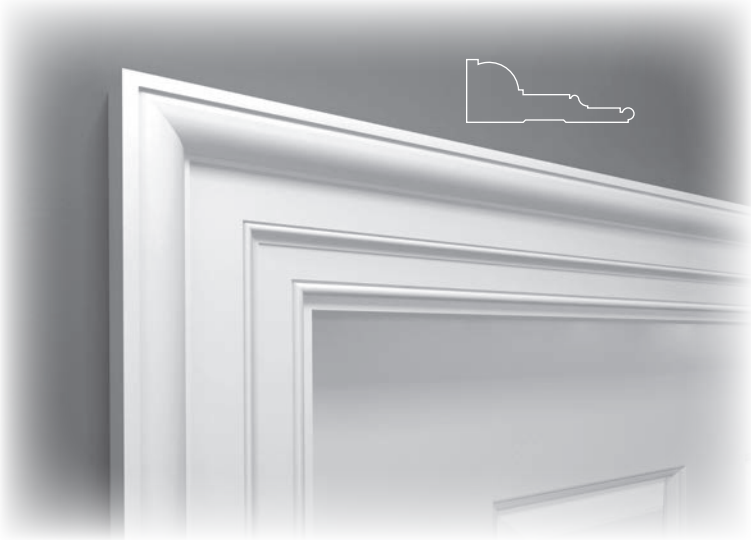

KB138 Georgian Casing (1-5/16" x 3-1/2" Poplar)

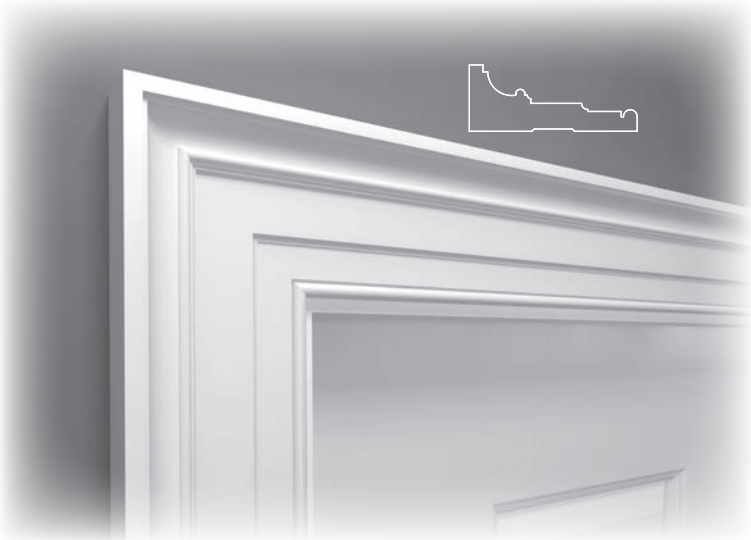

KB137 Federal Casing (1-3/8" x 3-1/2" Poplar)

Classical Casing

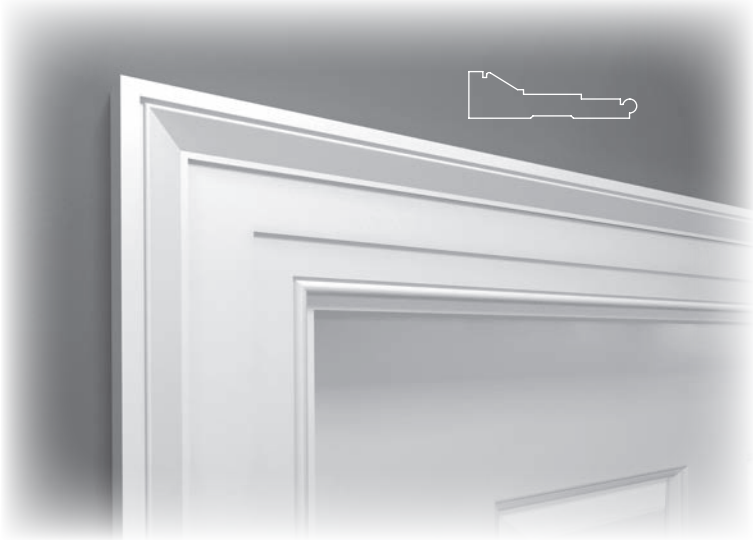

KB139 Greek Revival Casing (1" x 3-1/2" Poplar)

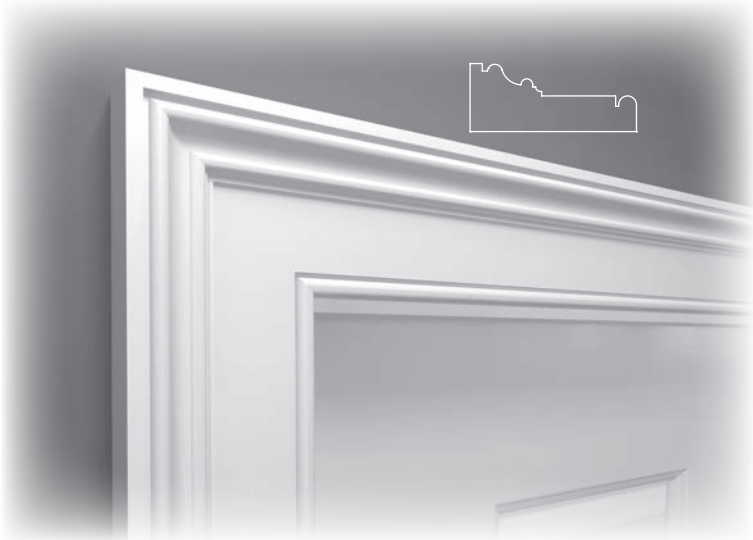

KB401 Colonial Revival Casing (1-7/16" x 3-1/2" Poplar)

Base Mouldings

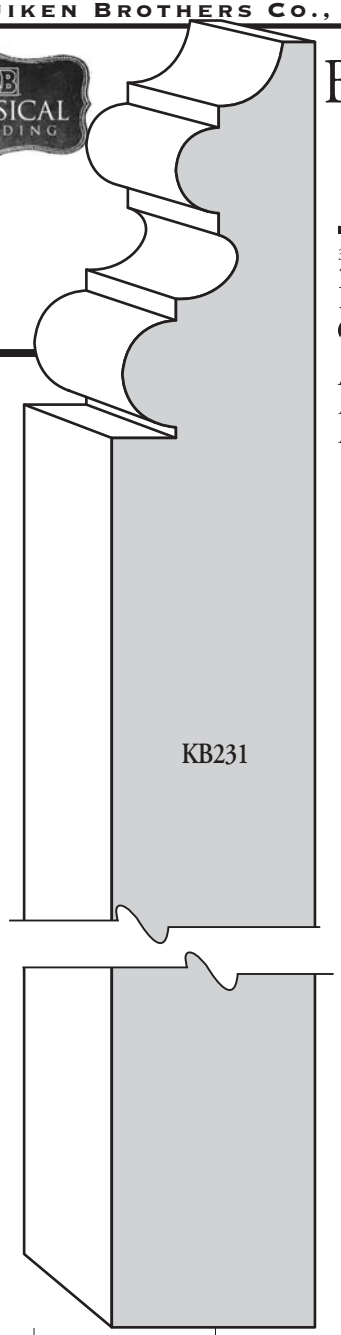

1 1/16" x 9"
Base

Matching Base Cap: KB249

KB231

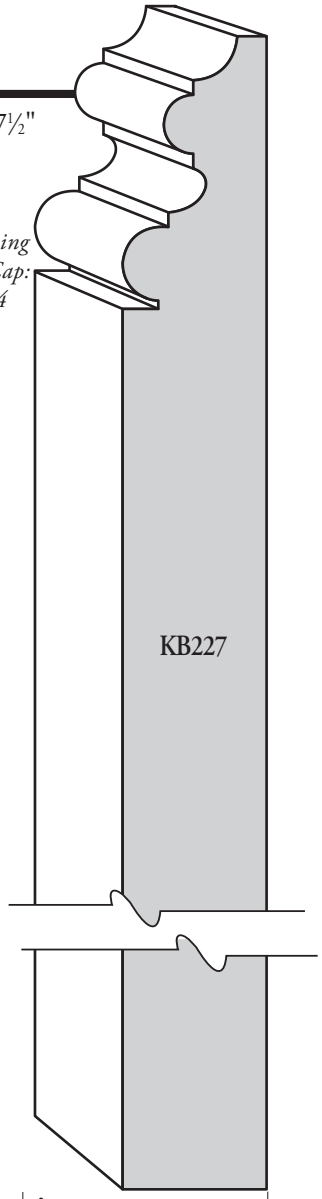

¾" x 7½"
Base

Matching Base Cap: KB244

KB227

● Clear Pine | ○ Primed FJ Pine | Primed FJ Poplar | Lightweight Primed MDF

Base Mouldings

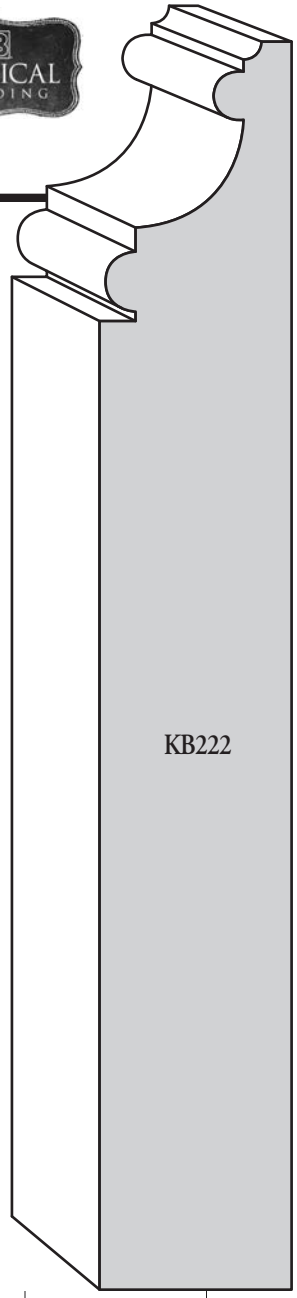

1" x 6½"
Base

Matching Base Cap: KB243

KB222

*Matching Base Cap: KB241 *not identical*

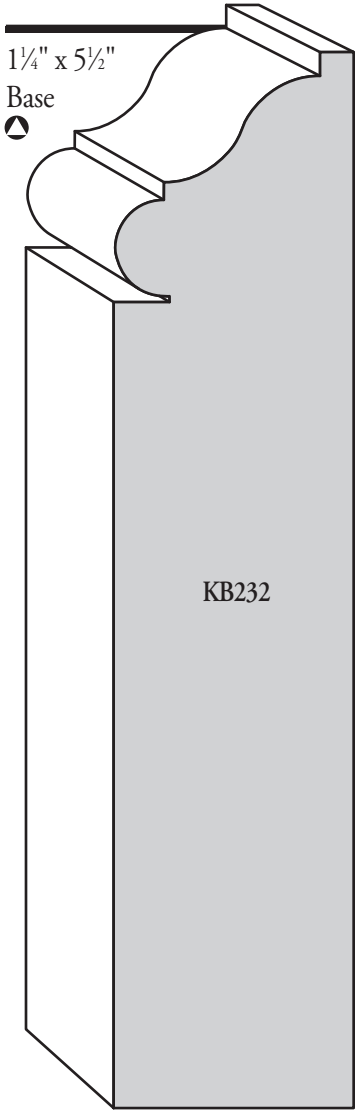

1¼" x 5½"
Base

KB232

● Clear Pine | ○ Primed FJ Pine | Primed FJ Poplar | Lightweight Primed MDF

Base Mouldings

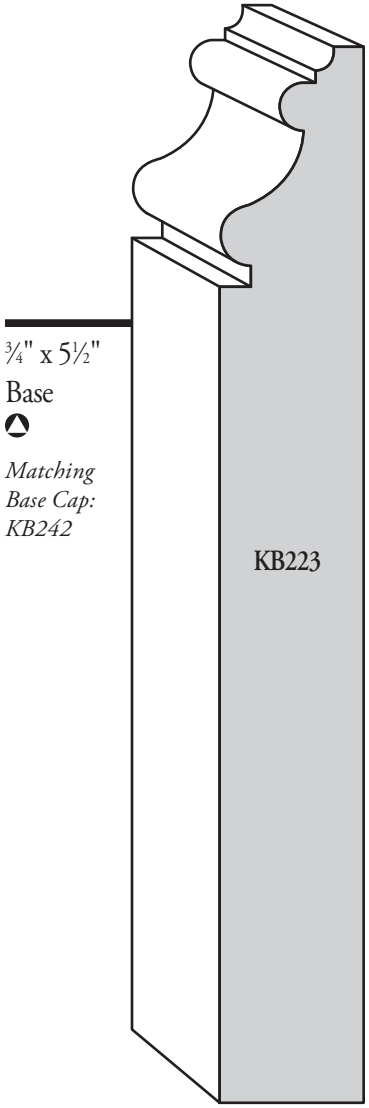

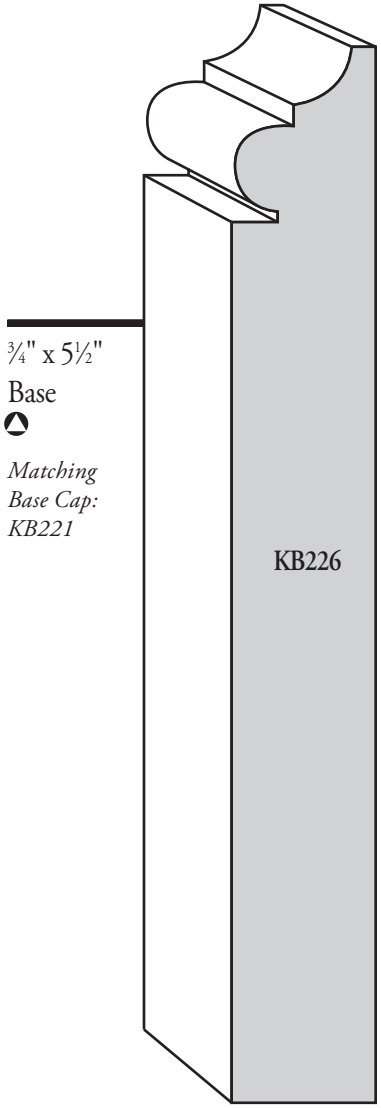

● Clear Pine | ○ Primed FJ Pine | Primed FJ Poplar | Lightweight Primed MDF

Base Mouldings

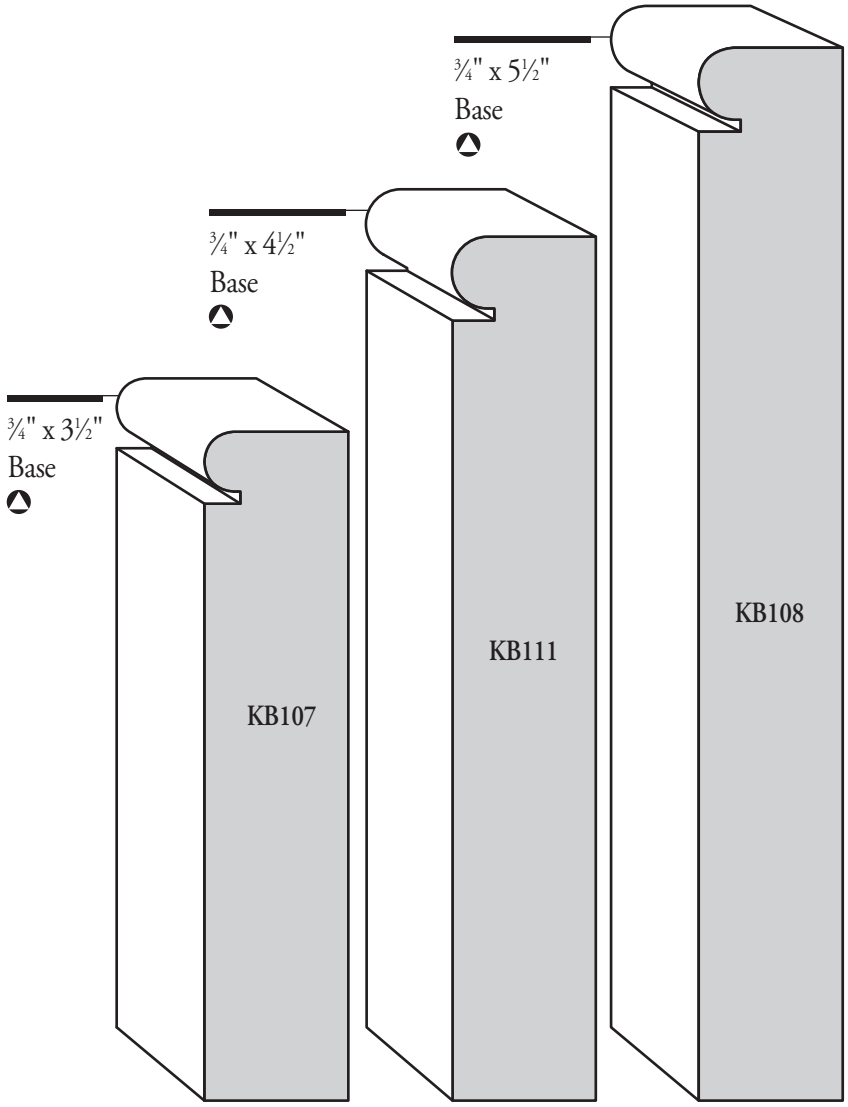

● Clear Pine | ○ Primed FJ Pine | Primed FJ Poplar | Lightweight Primed MDF

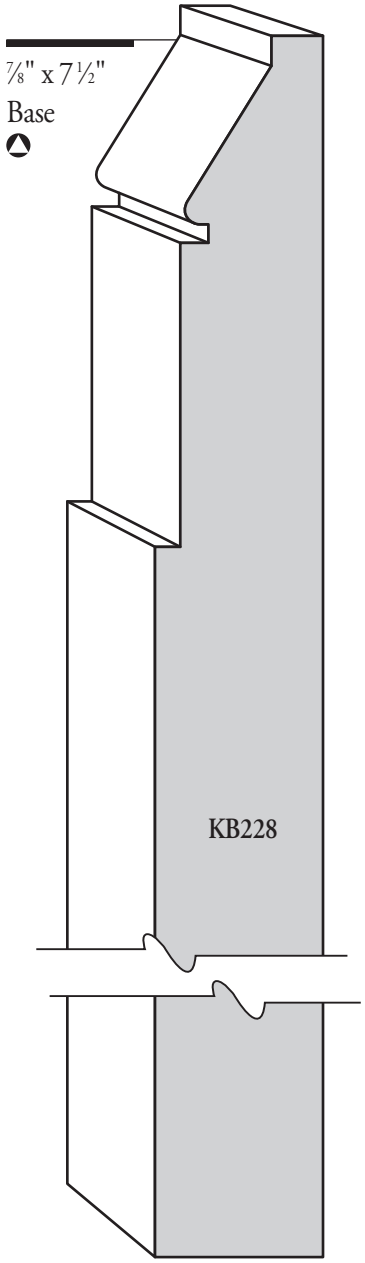

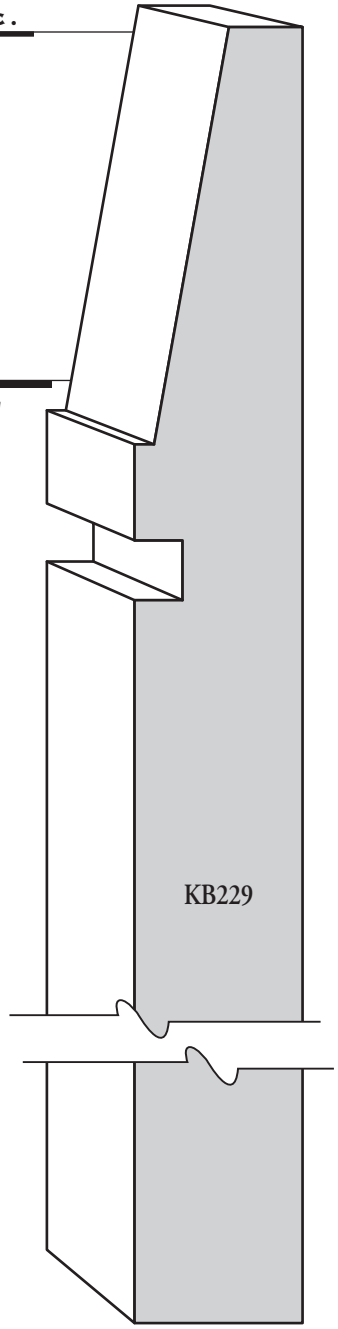

● Clear Pine | ○ Primed FJ Pine | Primed FJ Poplar | Lightweight Primed MDF

KUIKEN BROTHERS
MODERN CRAFTSMAN
MOULDING COLLECTION

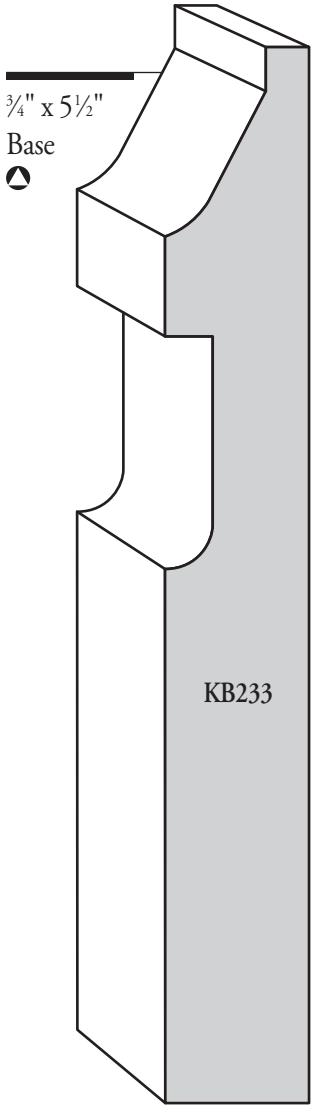

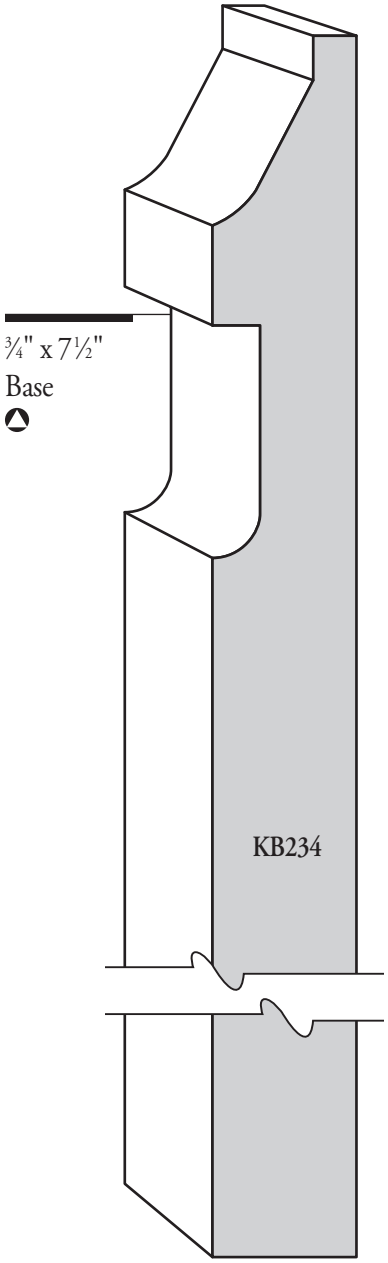

● Clear Pine | ○ Primed FJ Pine | Primed FJ Poplar | Lightweight Primed MDF

Base Mouldings

KUIKEN BROTHERS
MODERN CRAFTSMAN
MOULDING COLLECTION

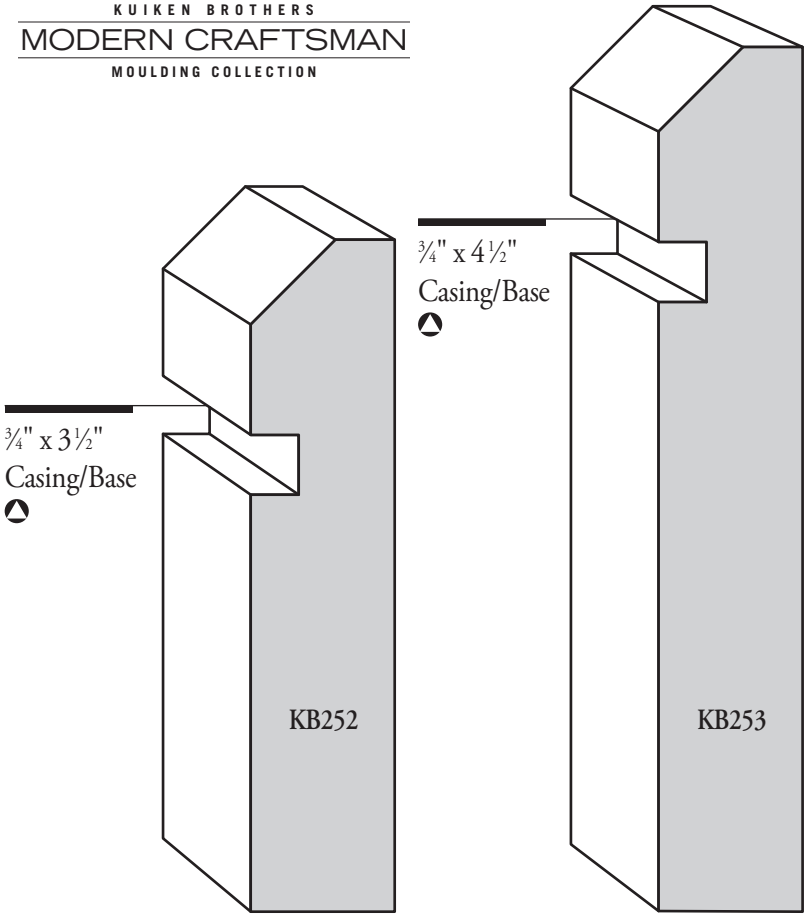

● Clear Pine | ○ Primed FJ Pine | △ Primed FJ Poplar | Lightweight Primed MDF

KUIKEN BROTHERS
MODERN CRAFTSMAN
MOULDING COLLECTION

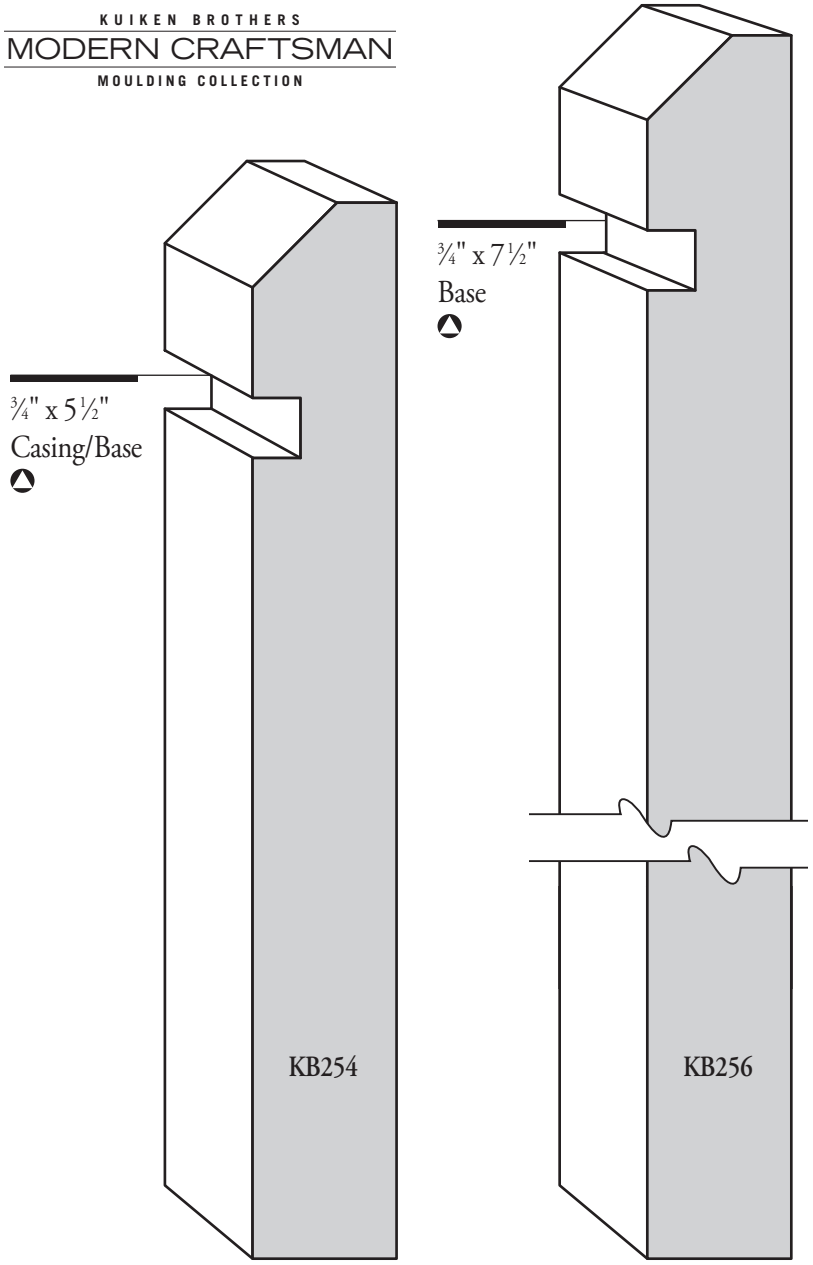

● Clear Pine | ○ Primed FJ Pine | △ Primed FJ Poplar | Lightweight Primed MDF

KUIKEN BROTHERS
MODERN CRAFTSMAN
MOULDING COLLECTION

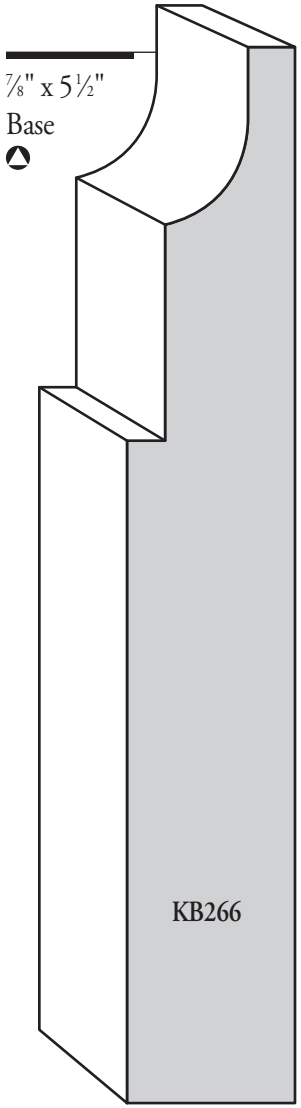

7/8" x 5 1/2"
Base

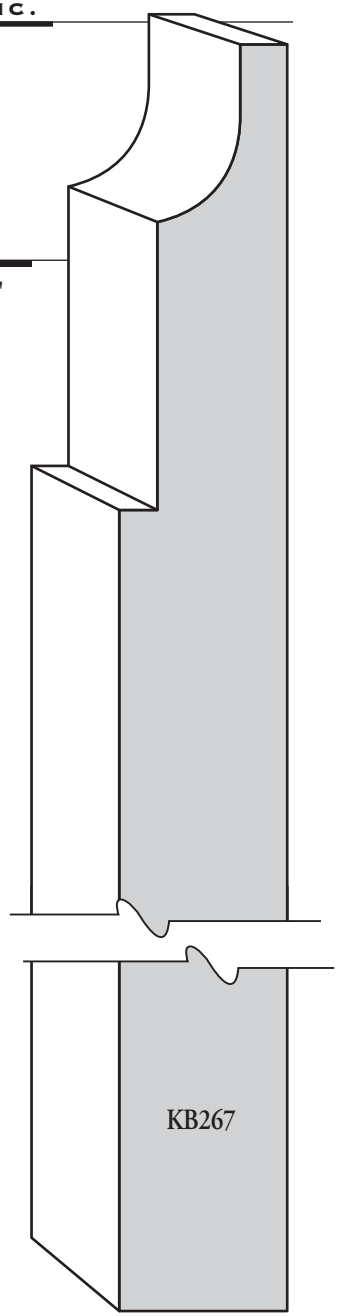

7/8" x 7 1/2"
Base

● Clear Pine | ○ Primed FJ Pine | Primed FJ Poplar | Lightweight Primed MDF

Base Mouldings

KUIKEN BROTHERS
MODERN CRAFTSMAN
MOULDING COLLECTION

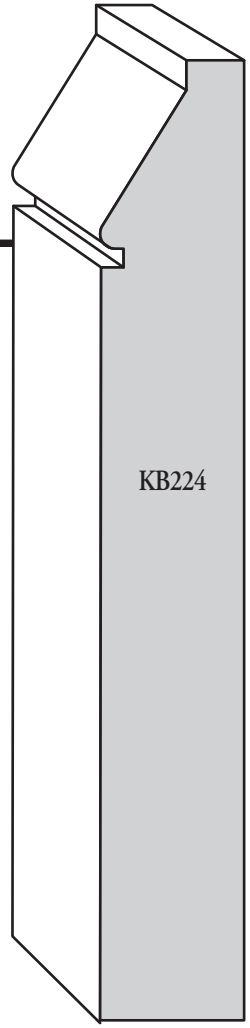

3/4" x 5"
Base

Matching Base Cap: KB246

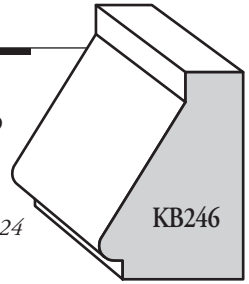

3/4" x 1 1/16"
Base Cap

Matching Base: KB224

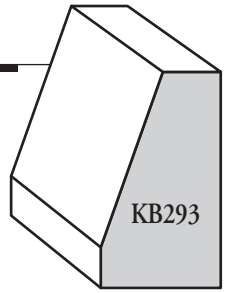

5/8" x 1 1/8"
Base Cap

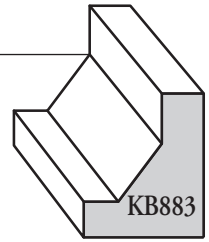

3/4" x 5/8"
Base Cap

● Clear Pine | ○ Primed FJ Pine | Primed FJ Poplar | Lightweight Primed MDF

Base Cap Mouldings

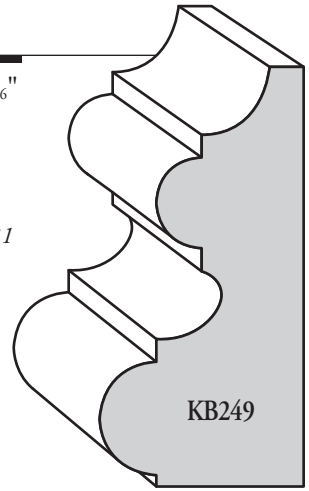

1 1/16" x 2 3/16"
Base Cap

Matching Base: KB231

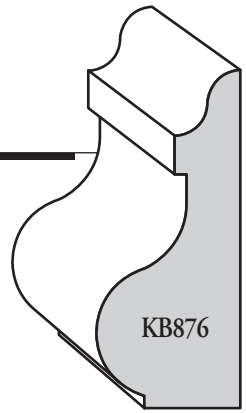

3/4"x 1 3/4"
Base Cap

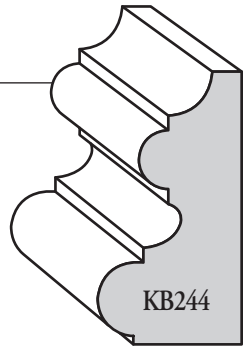

3/4"x 1 7/16"
Base Cap

Matching Base: KB227

● Clear Pine | ○ Primed FJ Pine | Primed FJ Poplar | Lightweight Primed MDF

Base Cap Mouldings

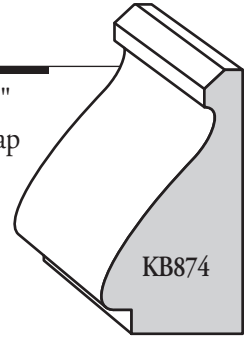

3/4"x 1 3/8"
Base Cap

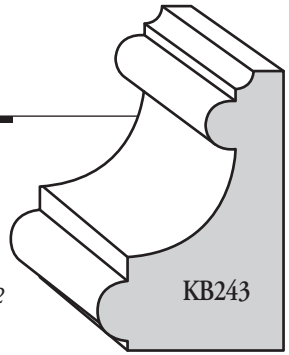

1"x 1 7/16"
Base Cap

Matching Base: KB222

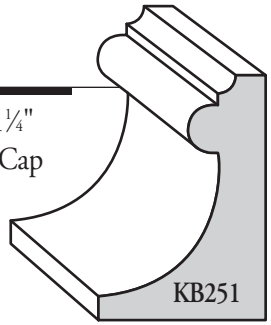

7/8"x 1 1/4"
Base Cap

● Clear Pine | ○ Primed FJ Pine | Primed FJ Poplar | Lightweight Primed MDF

Base Cap Mouldings

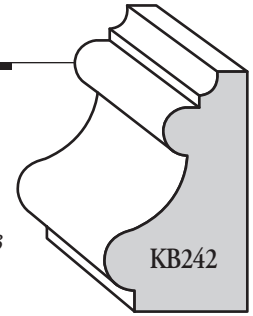

¾"x 1¼"
Base Cap
▲
Matching Base: KB223

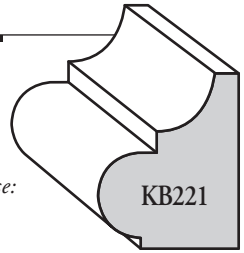

¾"x 15⁄16"
Base Cap
▲
Matching Base: KB226

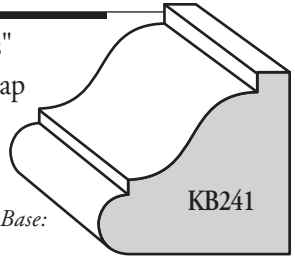

1"x 15⁄16"
Base Cap
▲
Matching Base: KB232
**not identical*

● Clear Pine | ○ Primed FJ Pine | ▲ Primed FJ Poplar | Lightweight Primed MDF

Base Cap Mouldings

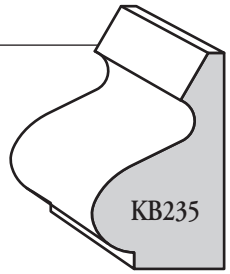

11⁄16" x 1⅛"
Base Cap Moulding
○

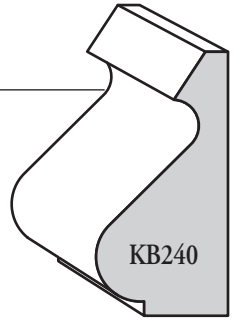

11⁄16" x 1⅜"
Base Cap Moulding
○

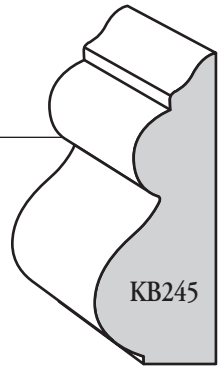

⅝" x 1⅝"
Base Cap Moulding
○

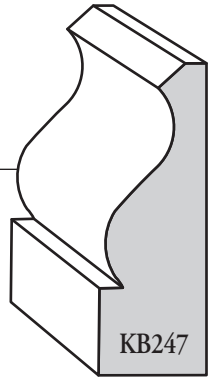

9⁄16" x 1⅝"
Band Base Moulding
●

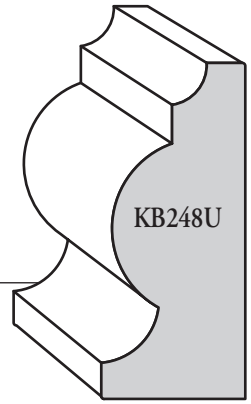

¾" x 1¾"
Base Cap
Lightweight Primed MDF

● Clear Pine | ○ Primed FJ Pine | ▲ Primed FJ Poplar | Lightweight Primed MDF

Base Mouldings

11/16" x 2 1/2"
Colonial Base
(Garage
Door Stop)
●

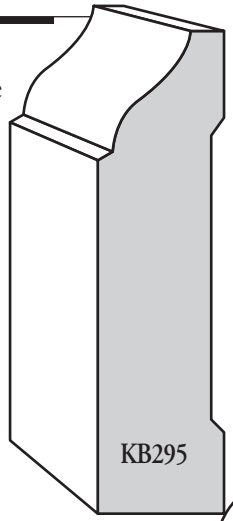

11/16" x 3 1/2"
Colonial
Casing/Base
○

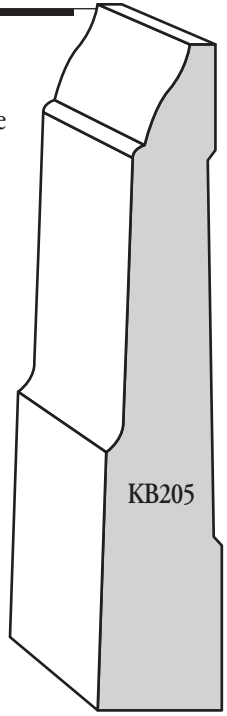

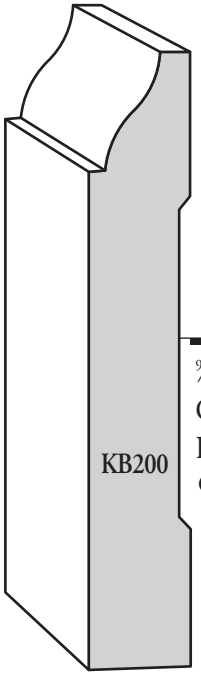

9/16" x 3 1/4"
Colonial
Base
● ○

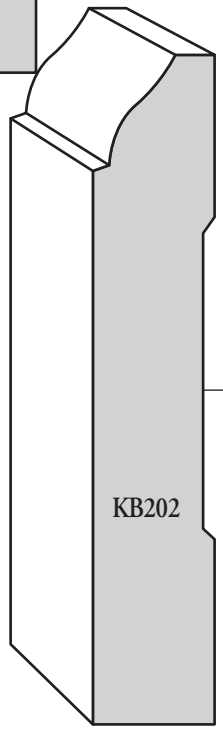

11/16" x 3 1/2"
Colonial Base
○

● Clear Pine | ○ Primed FJ Pine | Primed FJ Poplar | Lightweight Primed MDF

Base Mouldings

9/16" x 5 1/4"
Clam Base
○

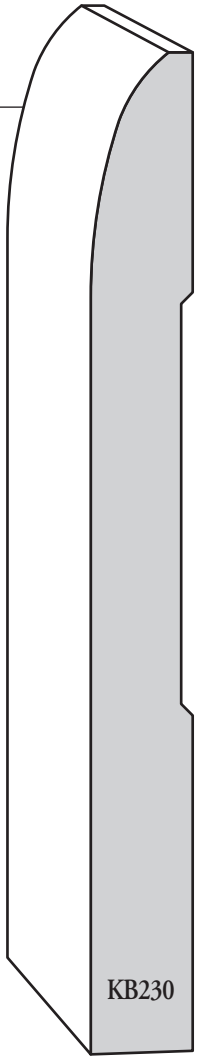

9/16" x 4 1/4"
Clam Base
○

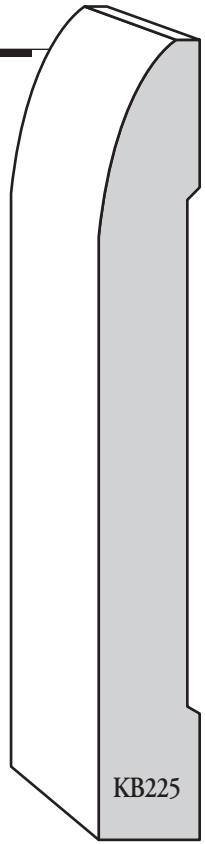

9/16" x 3 1/4"
Clam Base
● ○

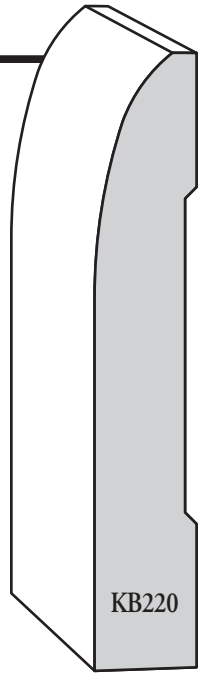

● Clear Pine | ○ Primed FJ Pine | Primed FJ Poplar | Lightweight Primed MDF

Base & Floor Mouldings

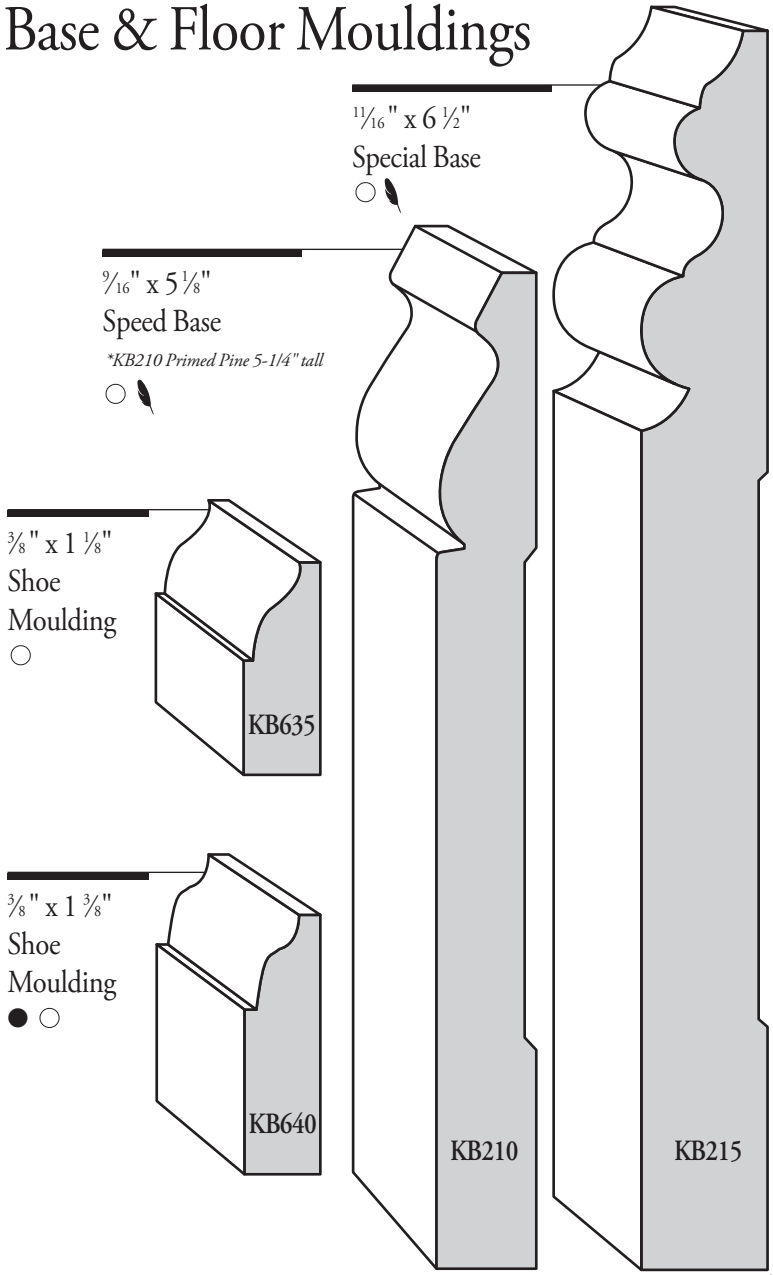

● Clear Pine | ○ Primed FJ Pine | △ Primed FJ Poplar | Lightweight Primed MDF

Base & Floor Mouldings

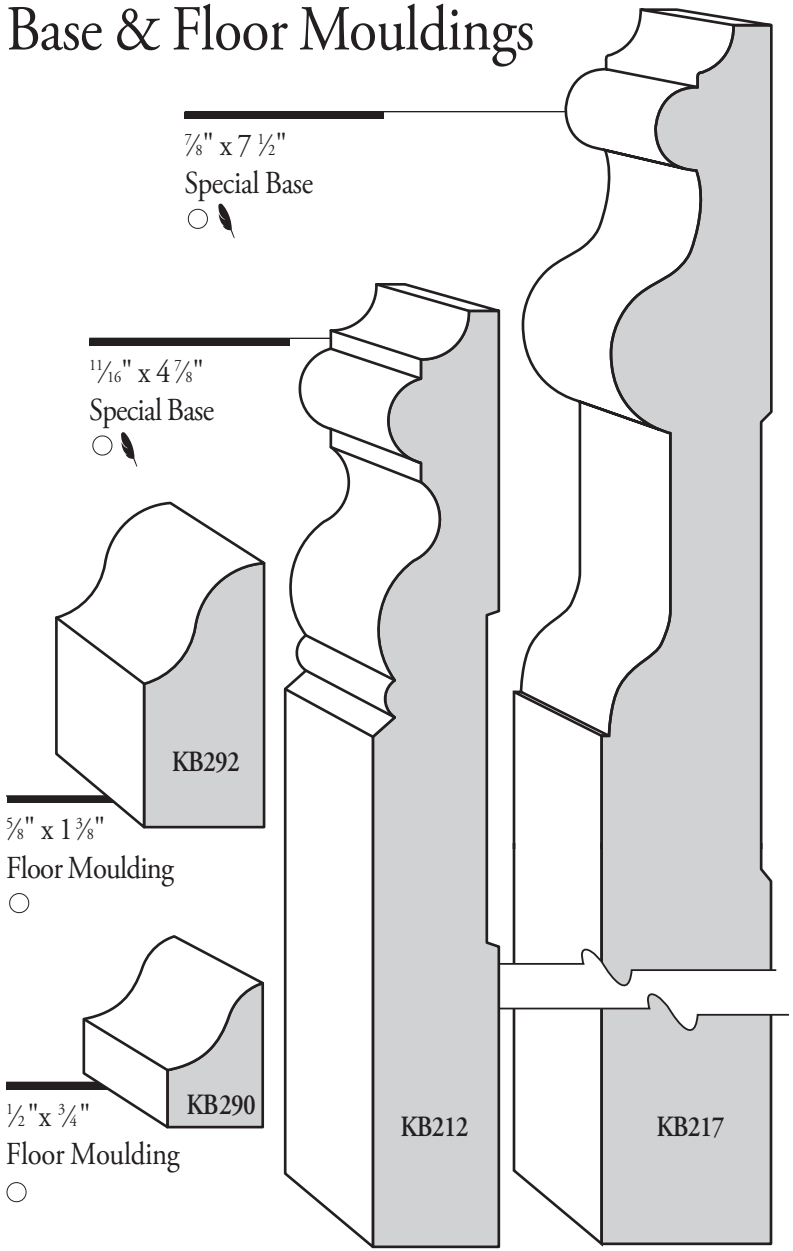

● Clear Pine | ○ Primed FJ Pine | △ Primed FJ Poplar | Lightweight Primed MDF

Base Mouldings

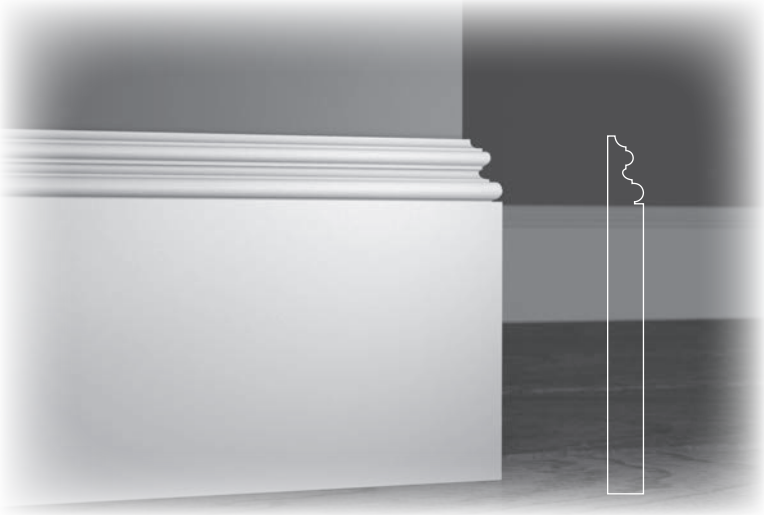

KB227 Base 3/4" x 7-1/2"

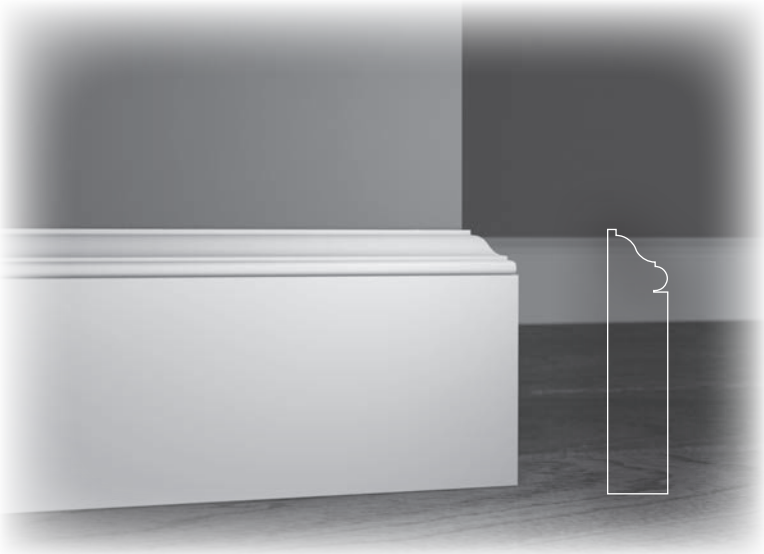

KB232 Base 1-1/4" x 5-1/2"

Base Moulding Combinations

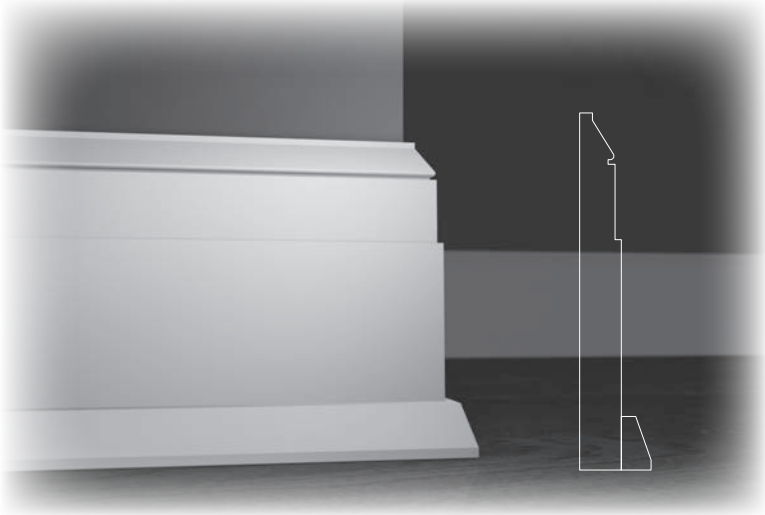

KB228 7/8" x 7-1/2" Base & KB293 5/8" x 1-1/8" Shoe

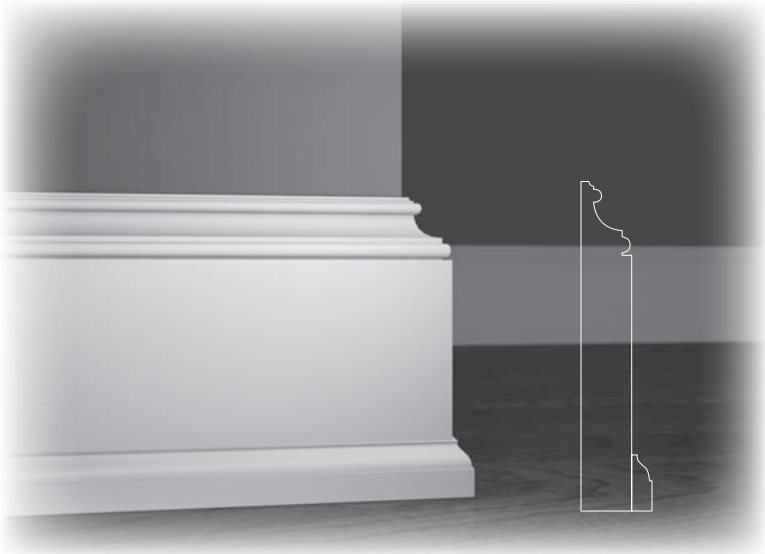

KB222 1" x 6-1/2" Base & KB635 3/8" x 1-1/8" Colonial Shoe

Crown Mouldings

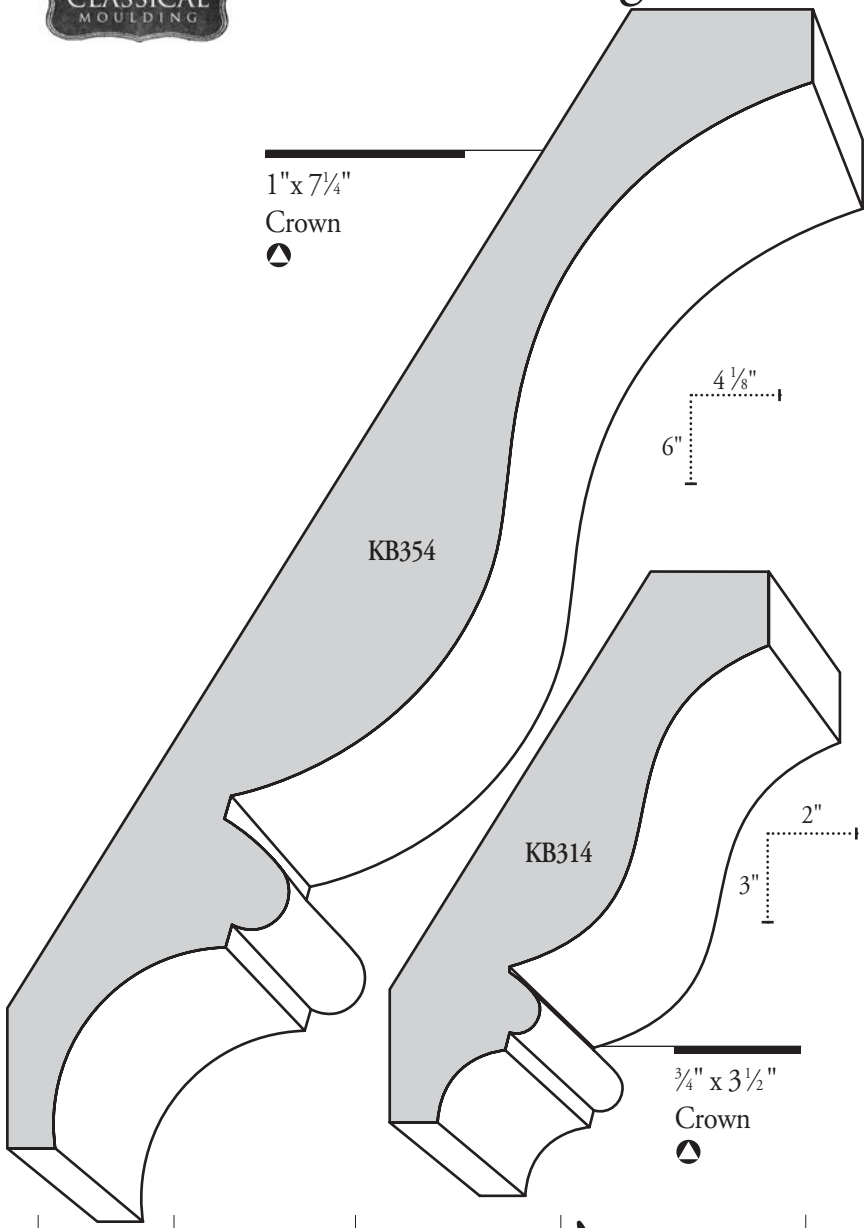

● Clear Pine | ○ Primed FJ Pine | ▲ Primed FJ Poplar | Lightweight Primed MDF

Crown Mouldings

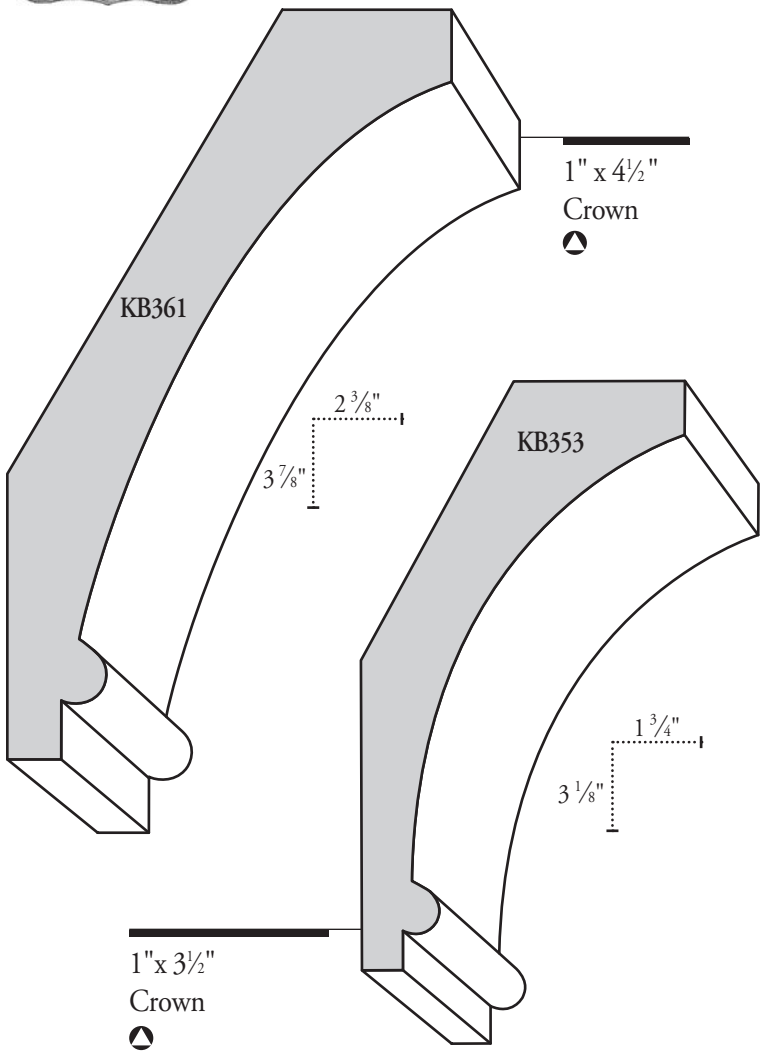

● Clear Pine | ○ Primed FJ Pine | ▲ Primed FJ Poplar | Lightweight Primed MDF

Crown Mouldings

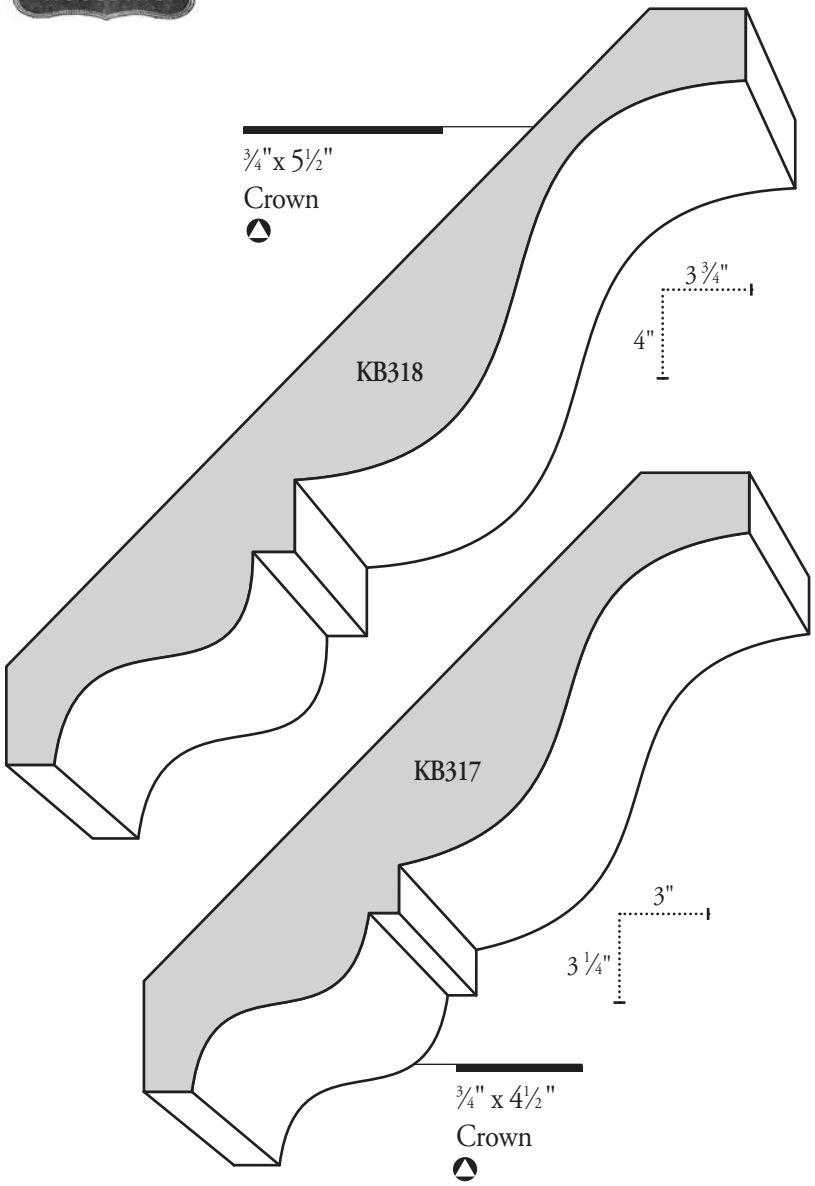

Clear Pine	Primed FJ Pine	Primed FJ Poplar	Lightweight Primed MDF

Crown Mouldings

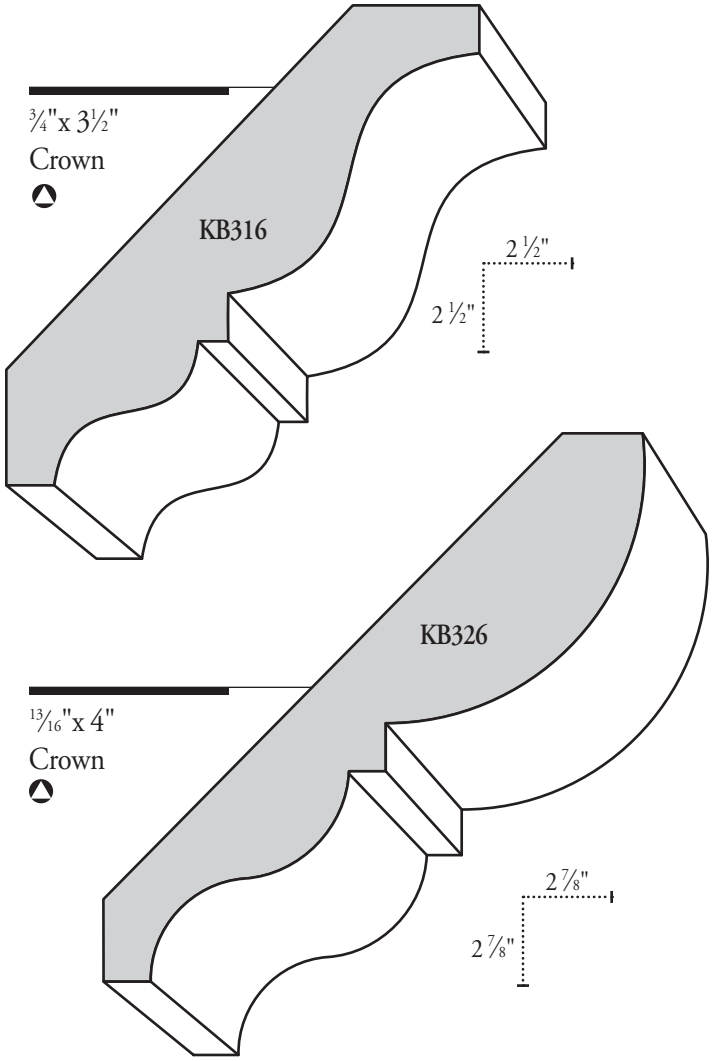

Clear Pine	Primed FJ Pine	Primed FJ Poplar	Lightweight Primed MDF

Crown Mouldings

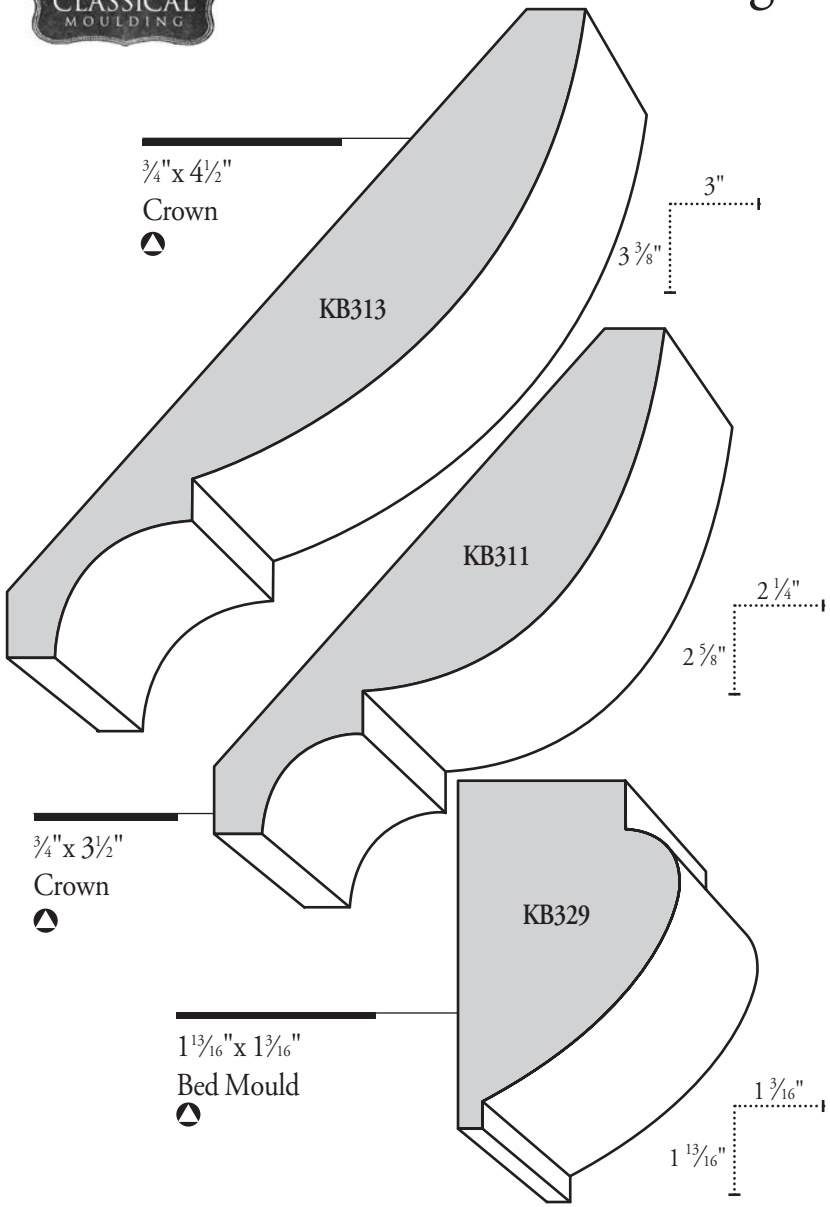

● Clear Pine | ○ Primed FJ Pine | Primed FJ Poplar | Lightweight Primed MDF

Crown Mouldings

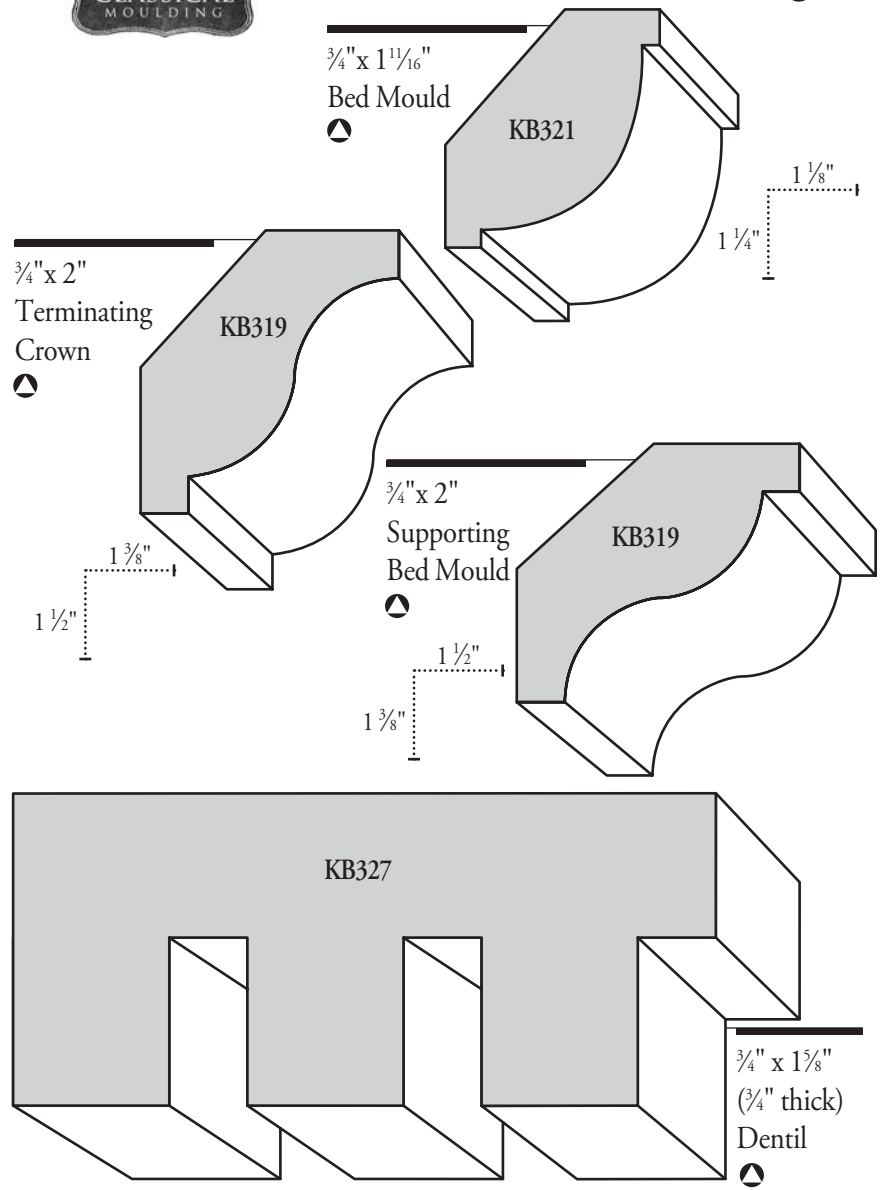

● Clear Pine | ○ Primed FJ Pine | Primed FJ Poplar | Lightweight Primed MDF

Crown Mouldings

¾"x 7¼"
Fascia

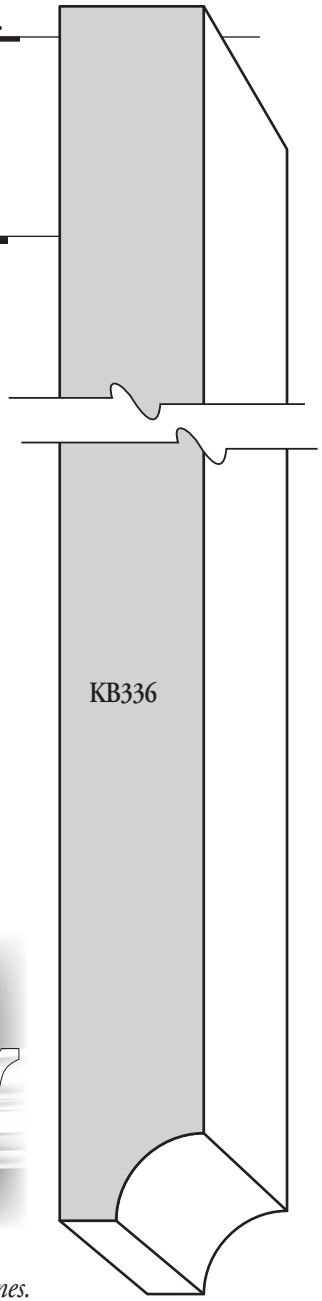

¾"x 3"
Bed Mould

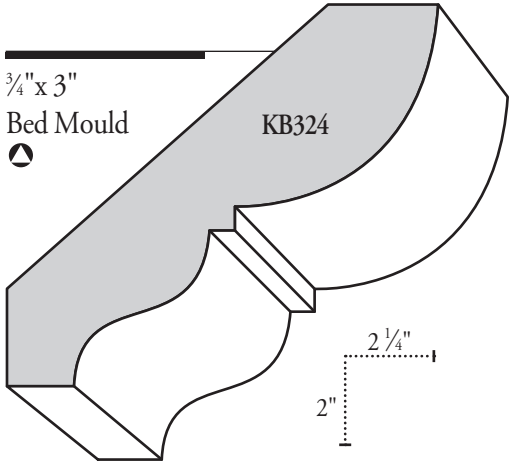

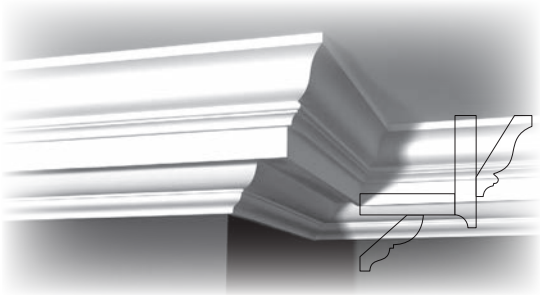

Use the KB336 Fascia in crown combination applications to create depth and stronger shadow lines.

● Clear Pine | ○ Primed FJ Pine | Primed FJ Poplar | Lightweight Primed MDF

**profiles not to scale*

1½" x 5½"
Stepped
Cove Crown

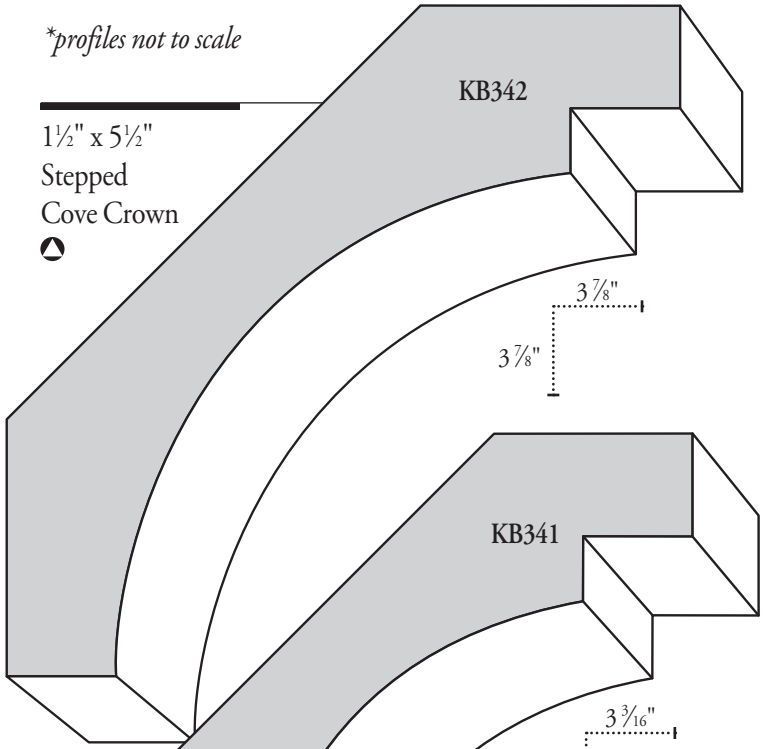

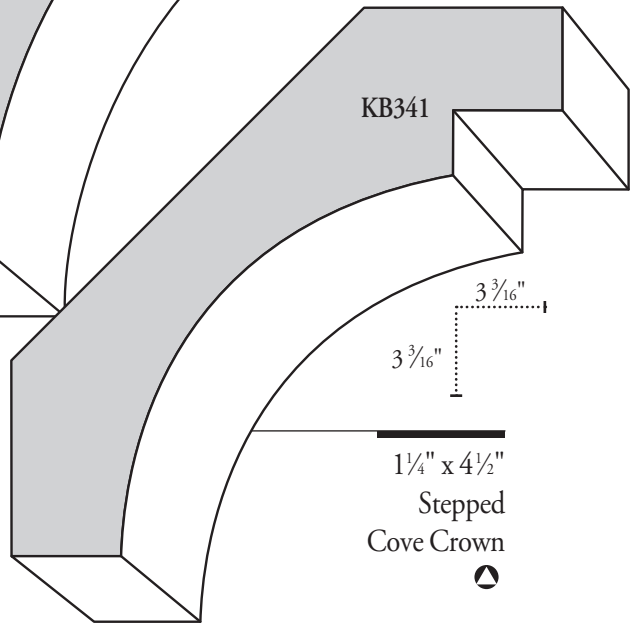

1¼" x 4½"
Stepped
Cove Crown

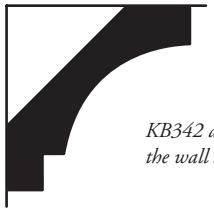

KB342 and KB341 can be installed with the step applied to the wall as well.

● Clear Pine | ○ Primed FJ Pine | Primed FJ Poplar | Lightweight Primed MDF

KUIKEN BROTHERS

MODERN CRAFTSMAN

MOULDING COLLECTION

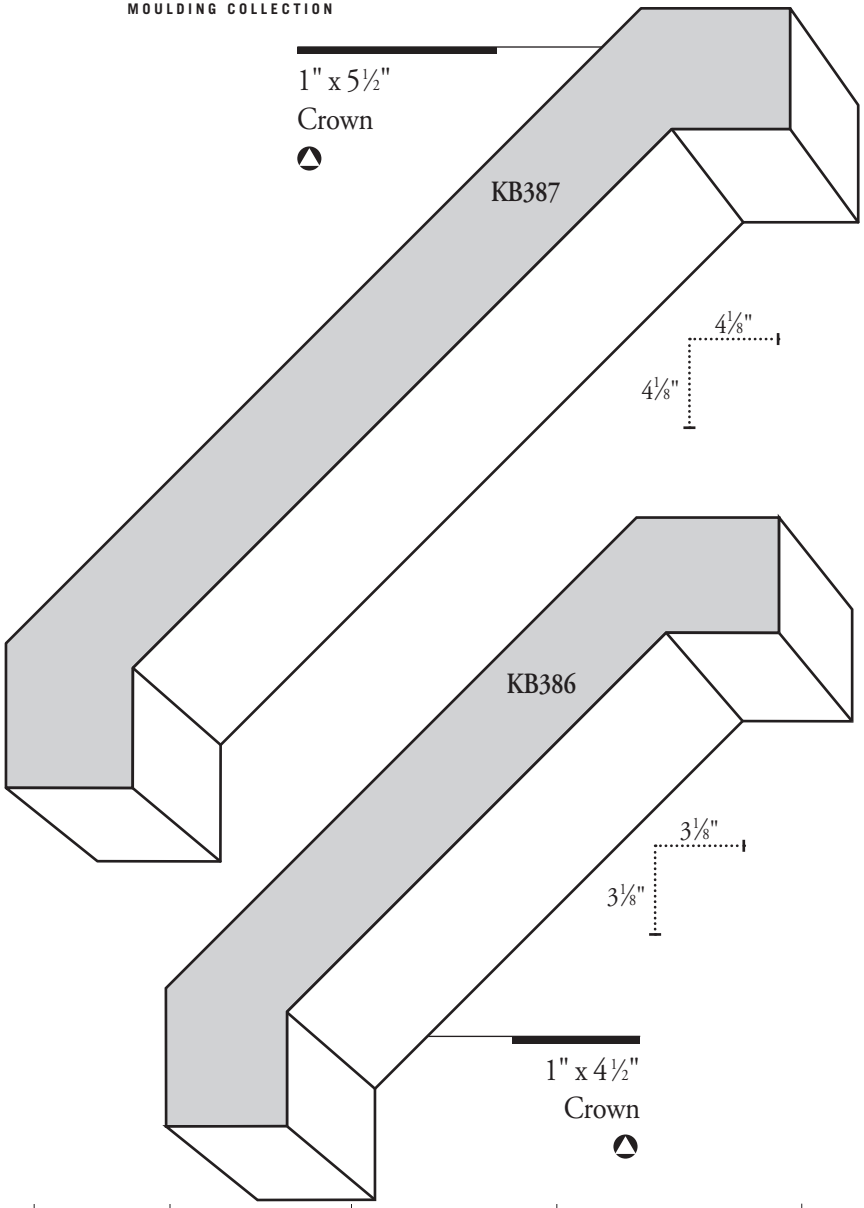

● Clear Pine | ○ Primed FJ Pine | Primed FJ Poplar | Lightweight Primed MDF

KUIKEN BROTHERS

MODERN CRAFTSMAN

MOULDING COLLECTION

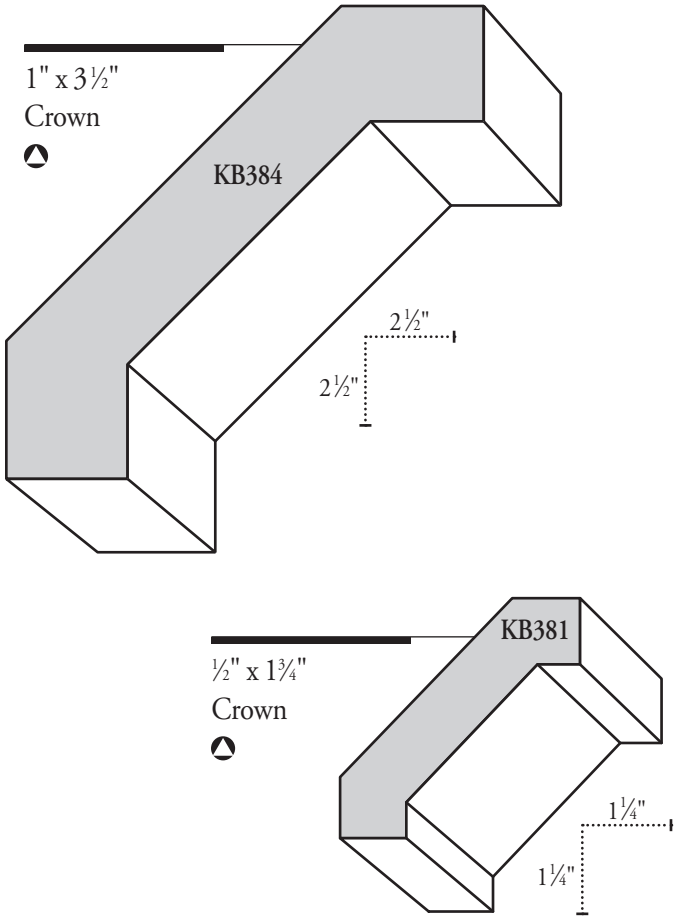

● Clear Pine | ○ Primed FJ Pine | Primed FJ Poplar | Lightweight Primed MDF

KUIKEN BROTHERS
MODERN CRAFTSMAN
MOULDING COLLECTION

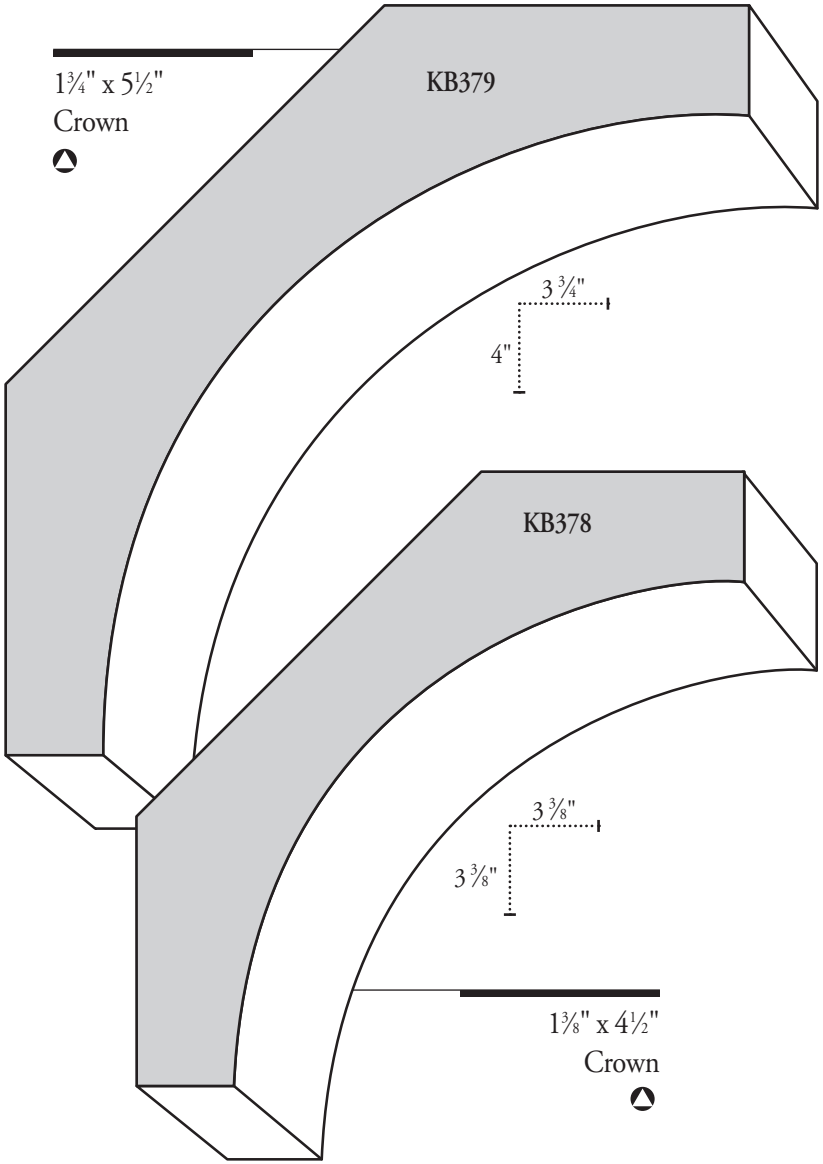

● Clear Pine | ○ Primed FJ Pine | ▲ Primed FJ Poplar | Lightweight Primed MDF

Crown Mouldings

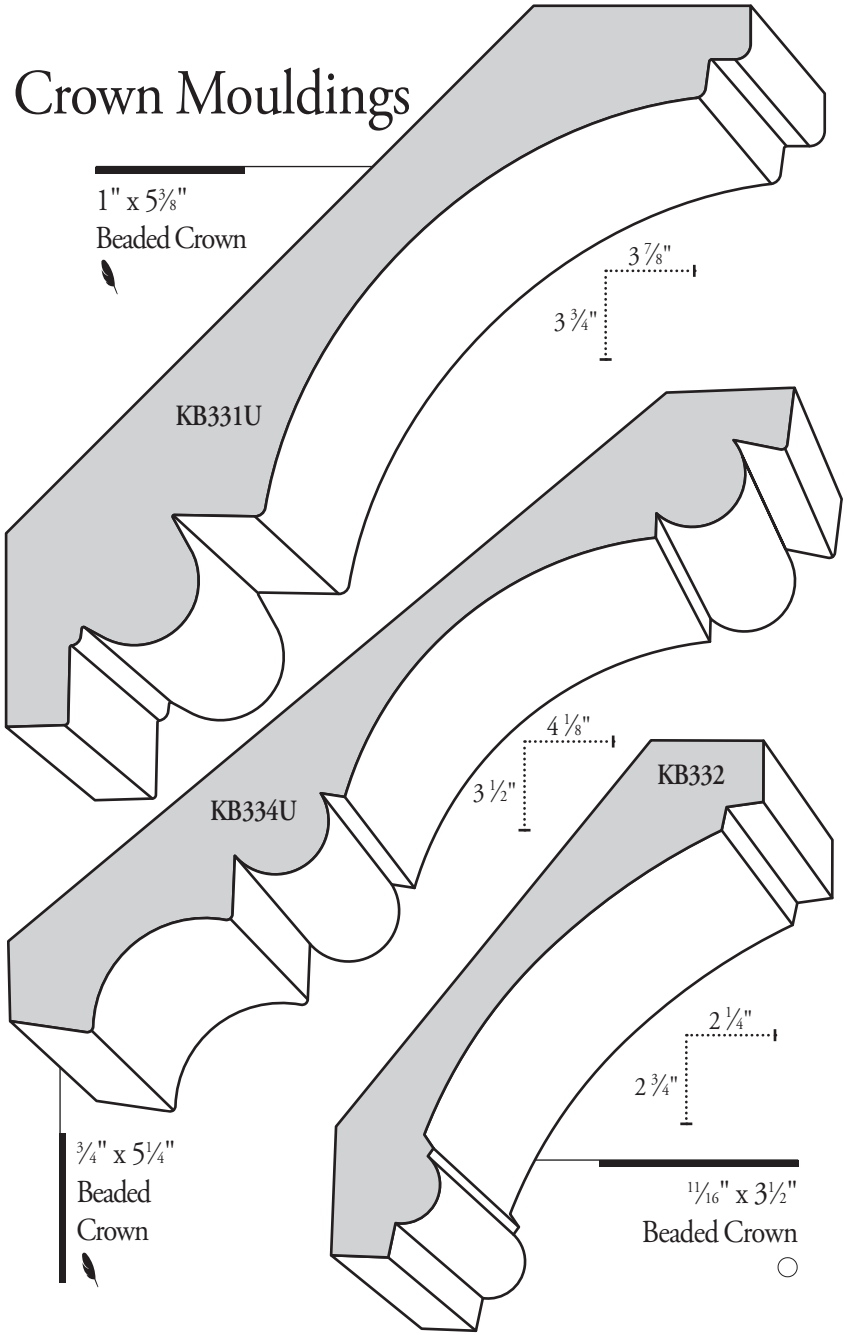

● Clear Pine | ○ Primed FJ Pine | ▲ Primed FJ Poplar | Lightweight Primed MDF

Crown Mouldings

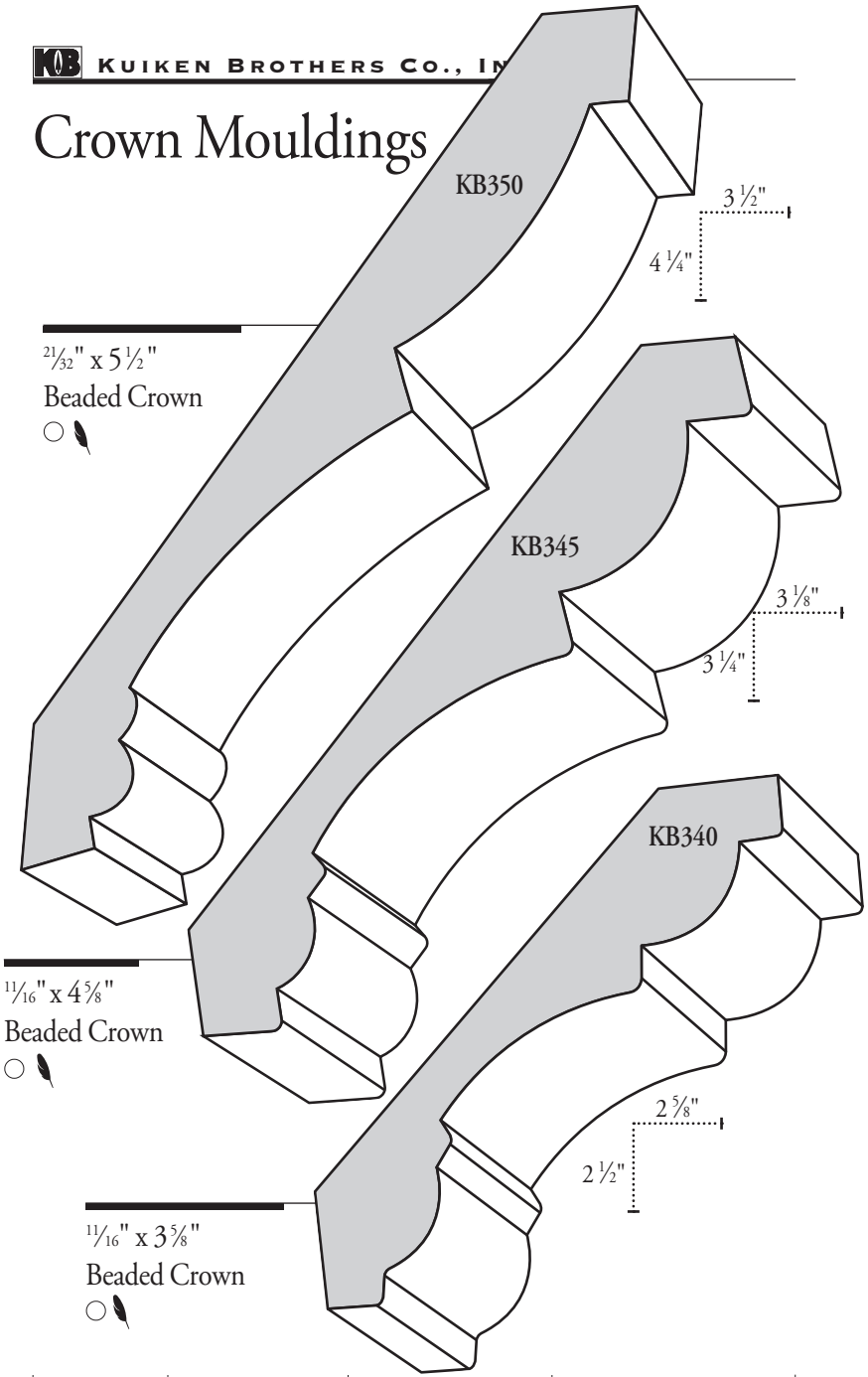

21/32" x 5 1/2"
Beaded Crown

11/16" x 4 5/8"
Beaded Crown

11/16" x 3 5/8"
Beaded Crown

● Clear Pine | ○ Primed FJ Pine | △ Primed FJ Poplar | Lightweight Primed MDF

Crown & Bed Mouldings

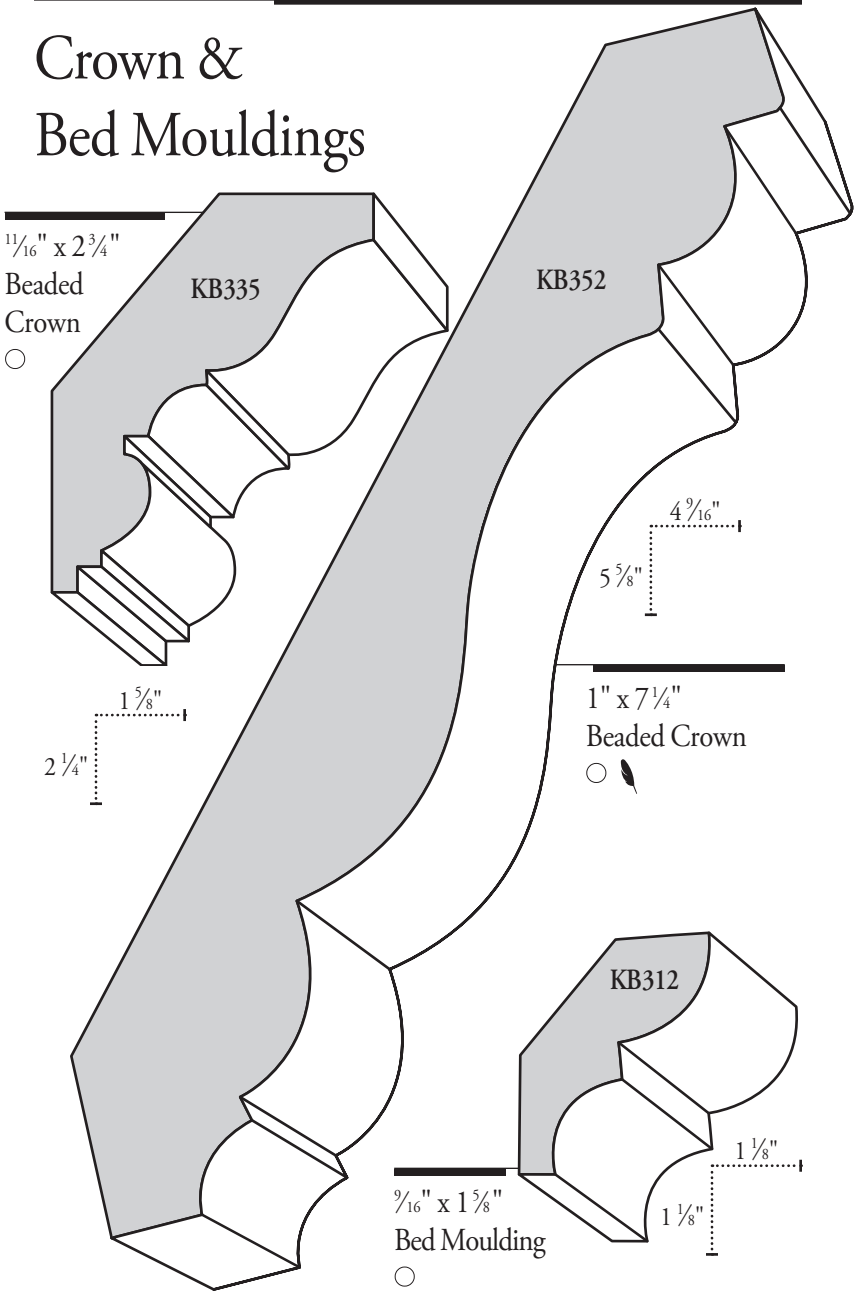

11/16" x 2 3/4"
Beaded Crown

1" x 7 1/4"
Beaded Crown

9/16" x 1 5/8"
Bed Moulding

● Clear Pine | ○ Primed FJ Pine | △ Primed FJ Poplar | Lightweight Primed MDF

Crown Mouldings

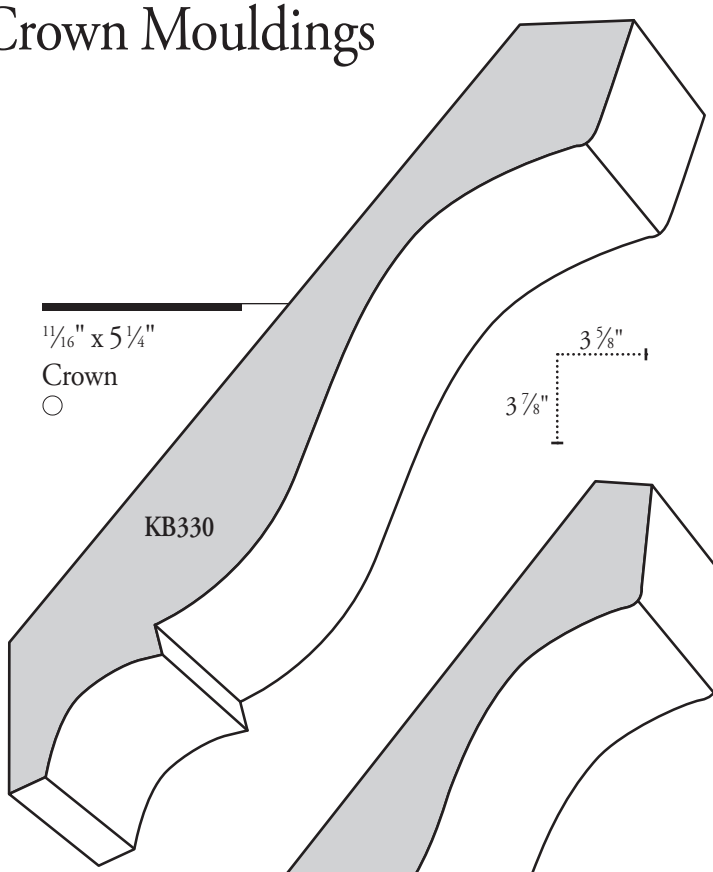

11/16" x 5 1/4"
Crown

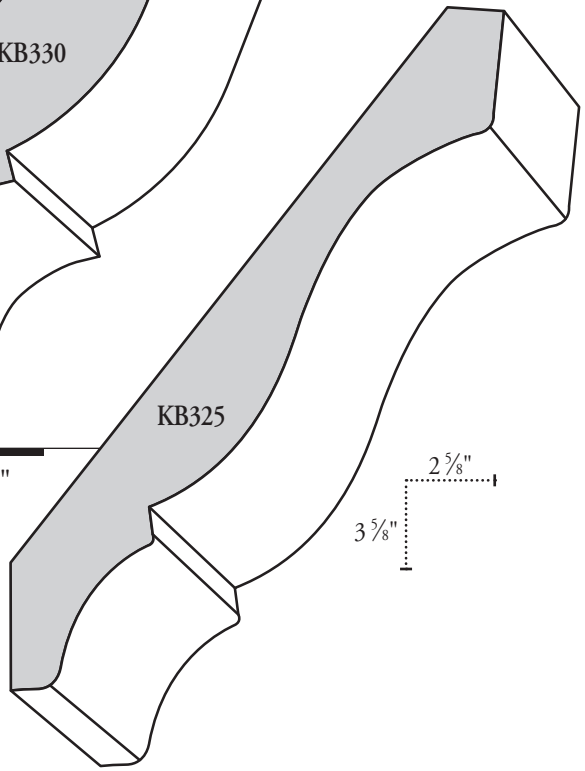

11/16" x 4 1/2"
Crown

Clear Pine | Primed FJ Pine | Primed FJ Poplar | Lightweight Primed MDF

Crown Mouldings

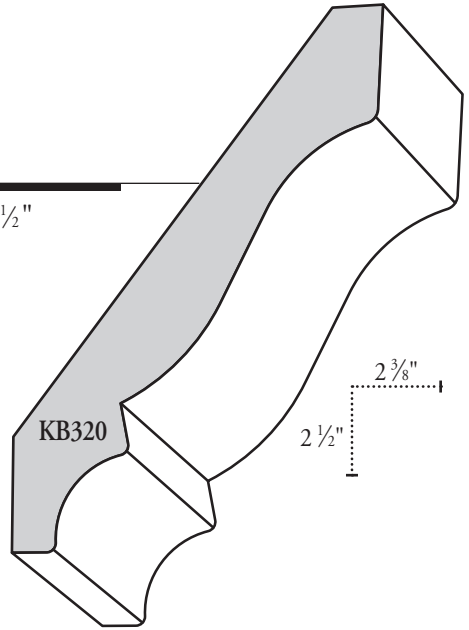

9/16" x 3 1/2"
Crown

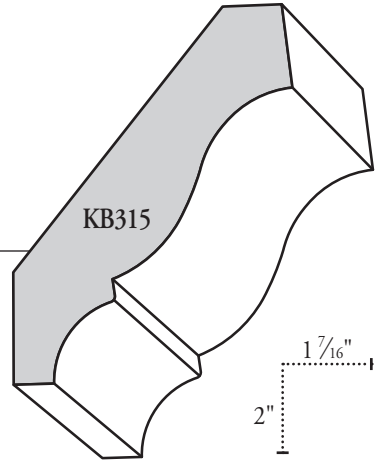

9/16" x 2 1/2"
Crown

Clear Pine | Primed FJ Pine | Primed FJ Poplar | Lightweight Primed MDF

Crown Mouldings

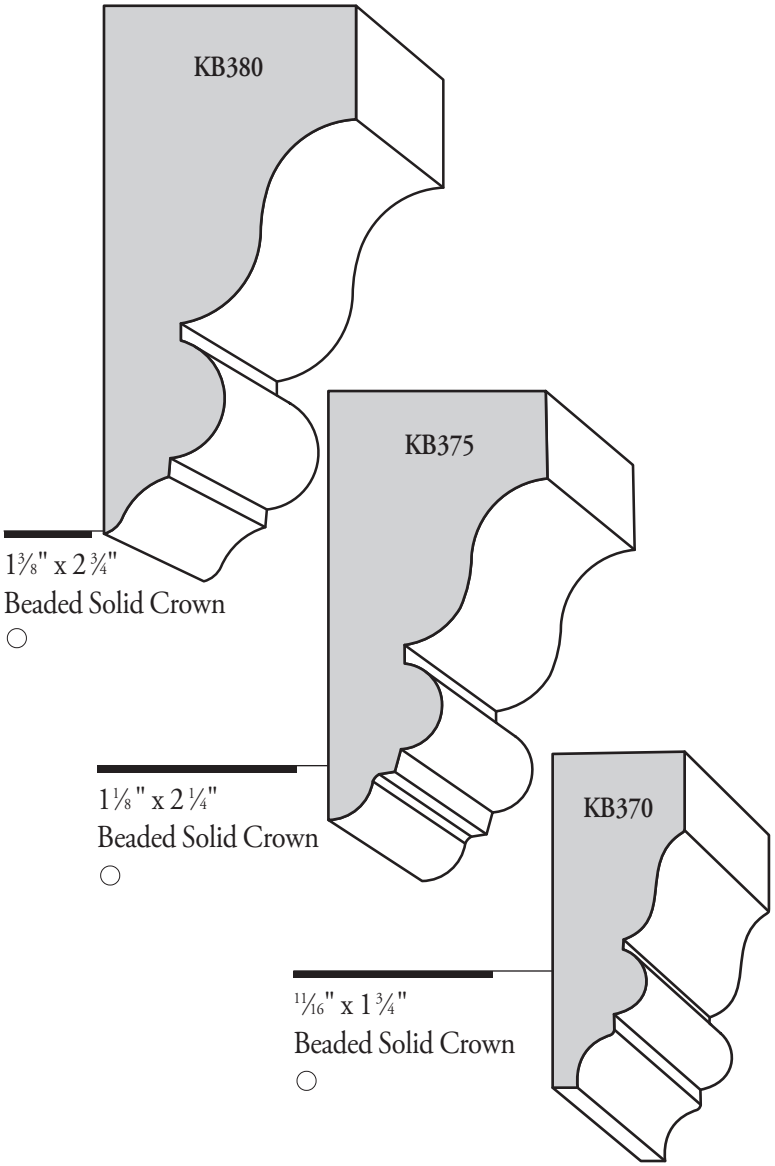

● Clear Pine | ○ Primed FJ Pine | Primed FJ Poplar | Lightweight Primed MDF

Crown Mouldings

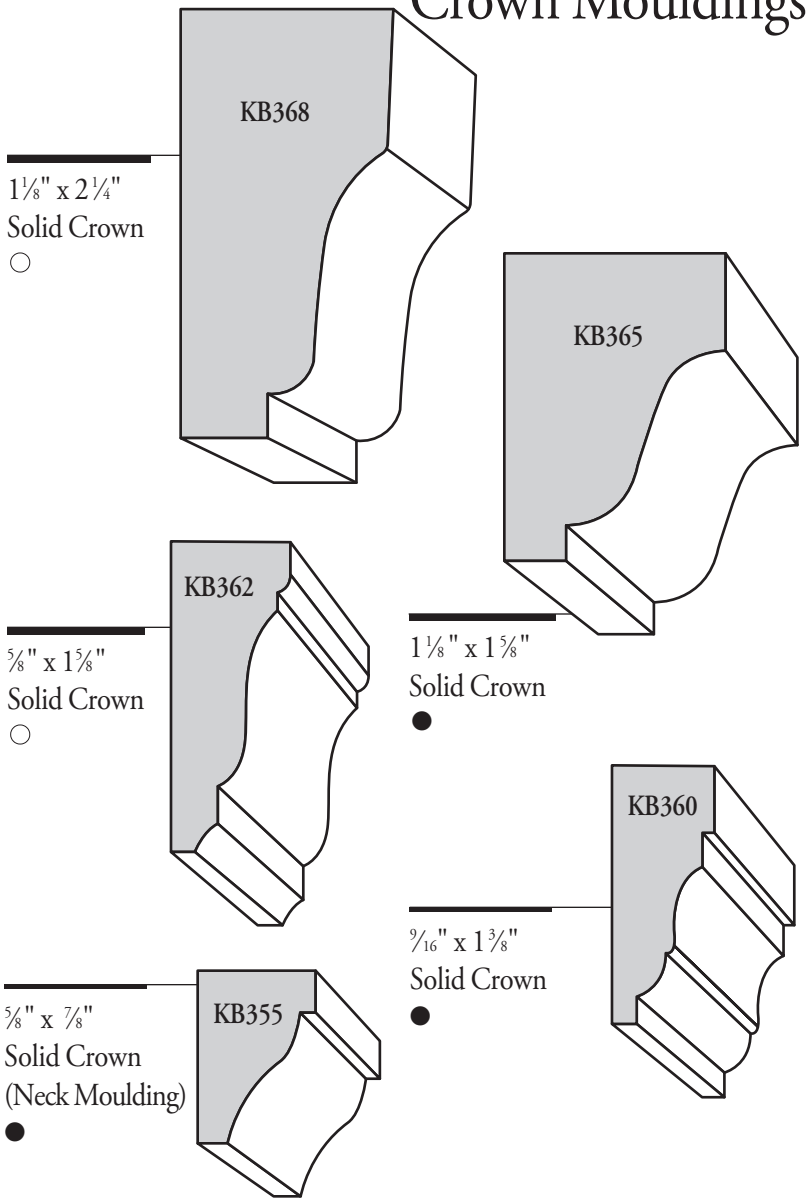

● Clear Pine | ○ Primed FJ Pine | Primed FJ Poplar | Lightweight Primed MDF

Crown Combinations

Crown Combination featuring KB317, KB336, KB324

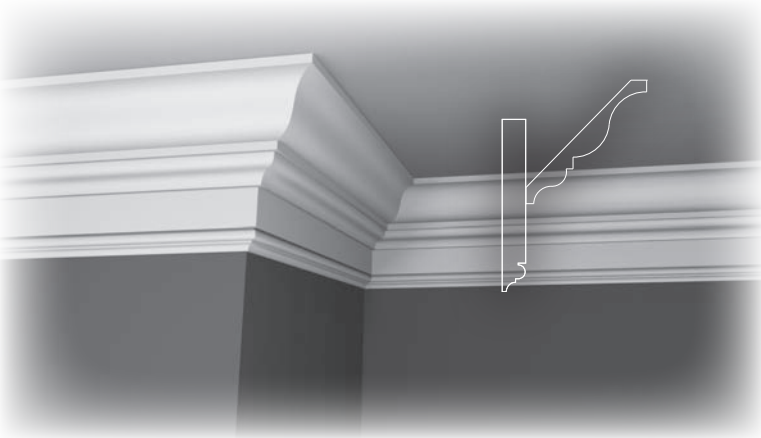

Crown Combination featuring KB318, KB226

● Clear Pine | ○ Primed FJ Pine | Primed FJ Poplar | Lightweight Primed MDF

Crown Combinations

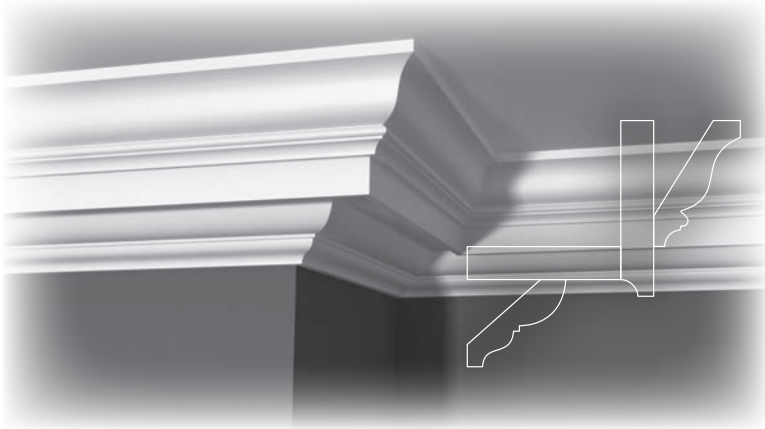

Crown Combination featuring KB314, KB336, KB324, 1x4S4S

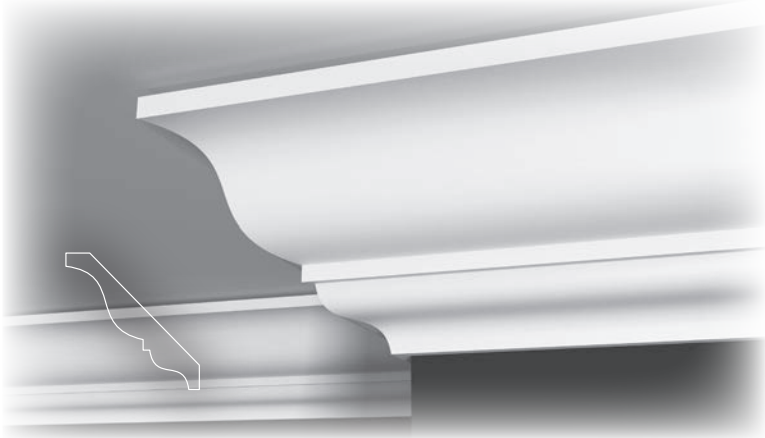

KB317 Crown (3/4″ x 4-1/2″)

● Clear Pine | ○ Primed FJ Pine | Primed FJ Poplar | Lightweight Primed MDF

Crown Combinations

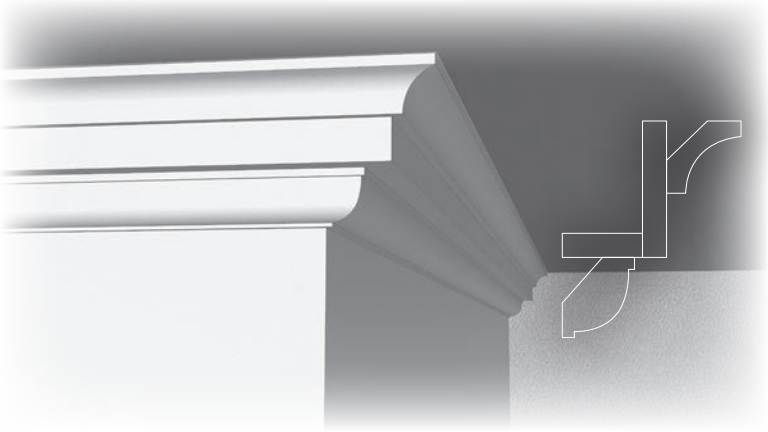

Early American Crown Combination featuring KB308, KB321 & Flat Stock Beam

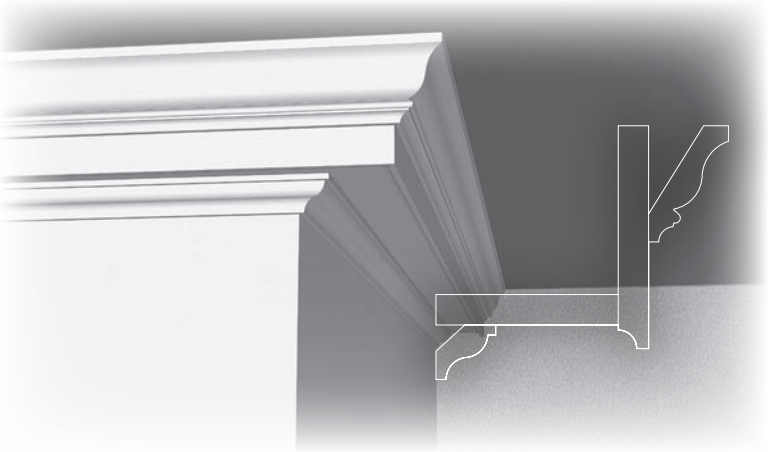

Federal Crown Combination featuring KB314, KB336, KB319 & Flat Stock Beam

● Clear Pine | ○ Primed FJ Pine | Primed FJ Poplar | Lightweight Primed MDF

Crown Combinations

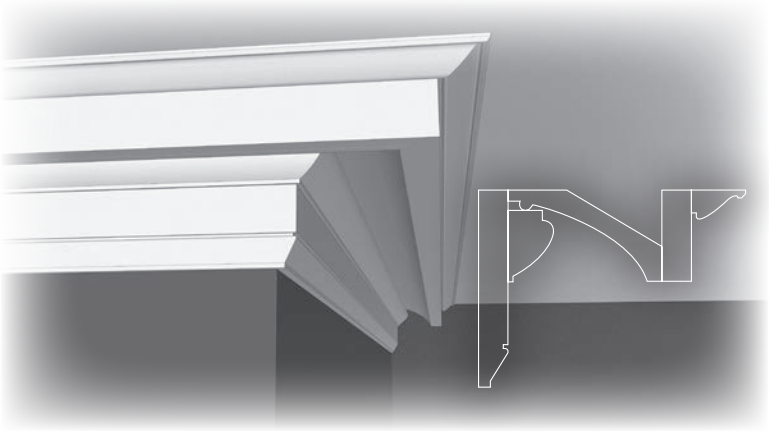

Greek Revival Crown Combination featuring KB874, KB361, KB329, KB224

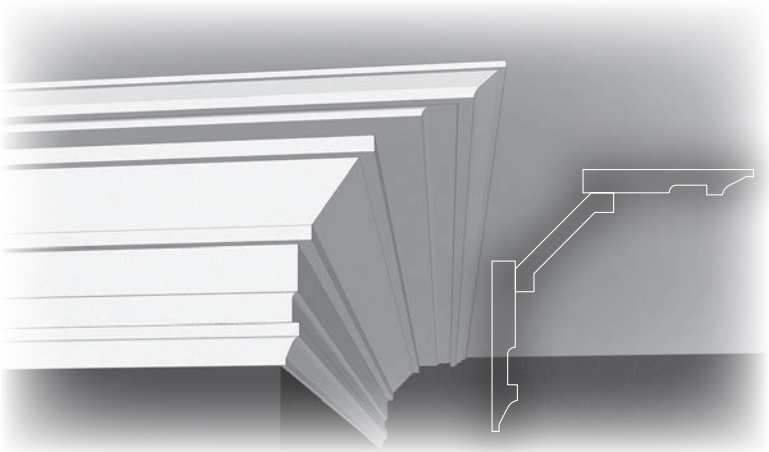

Modern Craftsman Crown Combination featuring KB386, KB233

● Clear Pine | ○ Primed FJ Pine | Primed FJ Poplar | Lightweight Primed MDF

MOULDING DESIGN GUIDE

Go to kuikenbrothers.com/mouldingdesignguide to view our ever-expanding library of Crown and Coffered Ceiling combinations. View and download CAD files of detailed diagrams for your specifications.

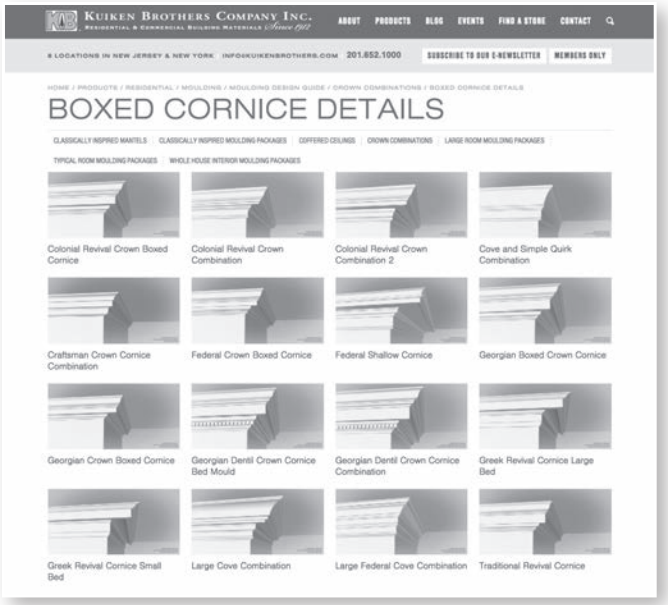

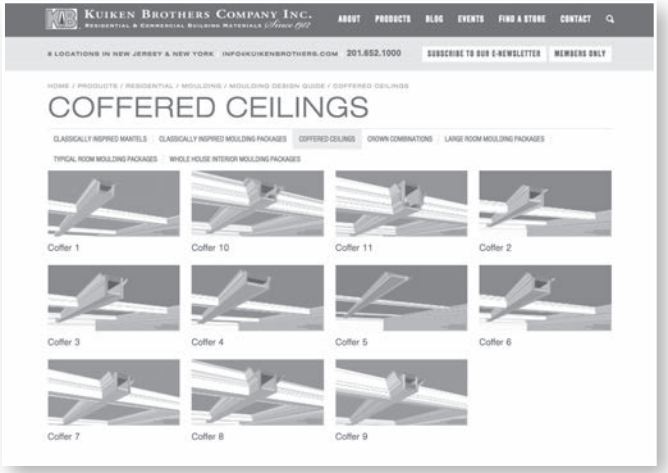

MAIN BEAM

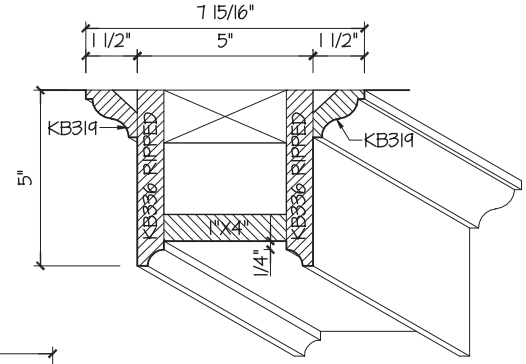

WALL BEAM

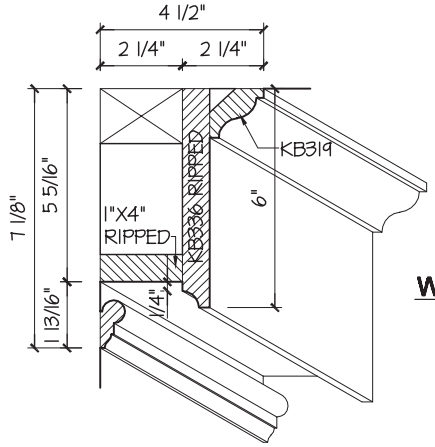

CROSS BEAM

SCALE: 3" = 1'-0"

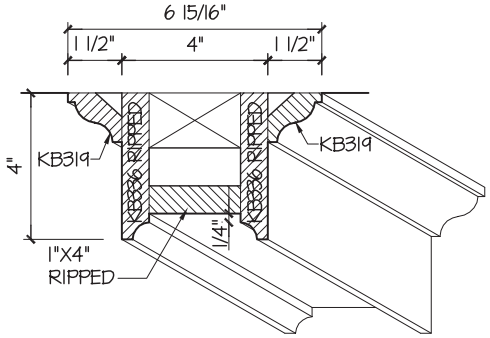

Nose & Cove Mouldings

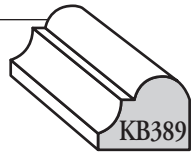

3/8" x 1/2"
Nose & Cove
●

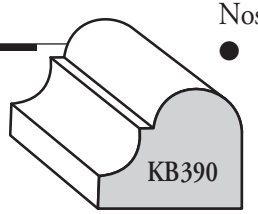

5/8" x 3/4"
Nose & Cove
○

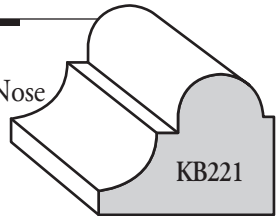

3/4" x 15/16"
Classical Nose & Cove
▲

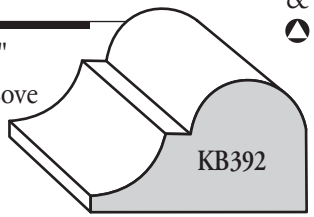

11/16" x 1 1/8"
Nose & Cove
○

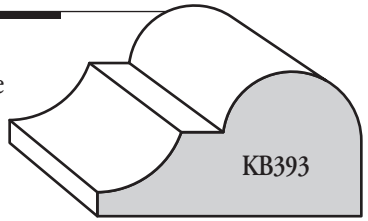

3/4" x 1 3/8"
Nose & Cove
○

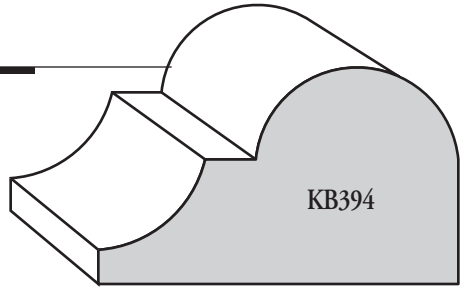

1 1/8" x 1 7/8"
Nose & Cove
○

● Clear Pine | ○ Primed FJ Pine | ▲ Primed FJ Poplar | Lightweight Primed MDF

Cove Mouldings

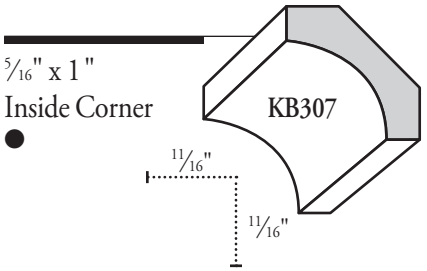

5/16" x 1"
Inside Corner
●

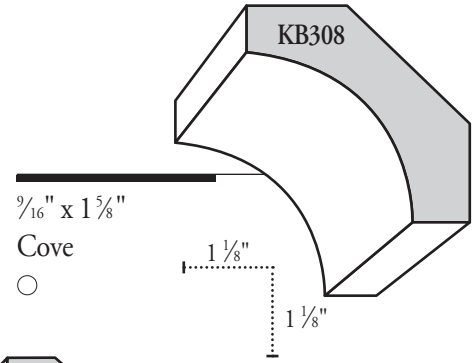

9/16" x 1 5/8"
Cove
○

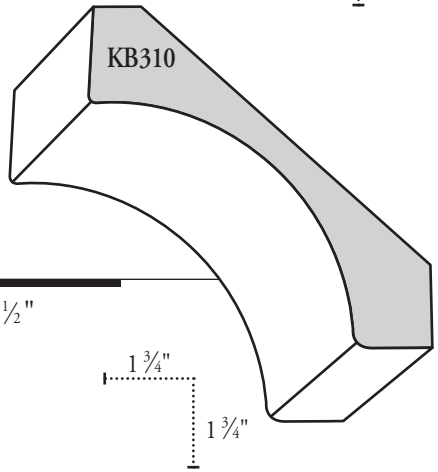

9/16" x 2 1/2"
Cove
●

● Clear Pine | ○ Primed FJ Pine | ▲ Primed FJ Poplar | Lightweight Primed MDF

Cove Mouldings

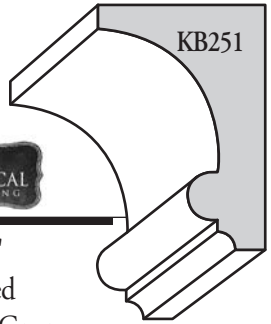

7/8" x 1 1/4"
Rabbeted
Beaded Cove

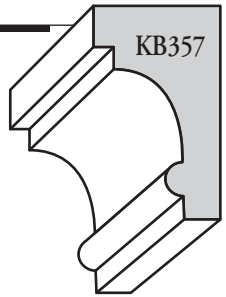

21/32" x 1 1/8"
Rabbeted
Beaded Cove

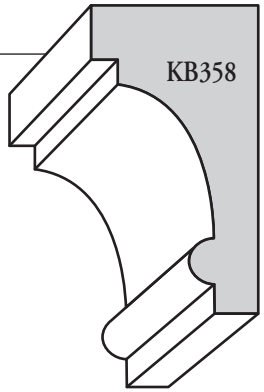

7/8" x 1 5/8"
Rabbeted
Beaded Cove

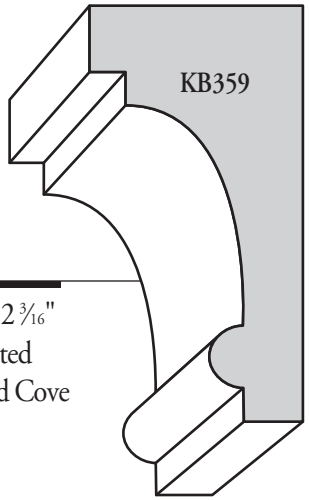

1 1/8" x 2 3/16"
Rabbeted
Beaded Cove

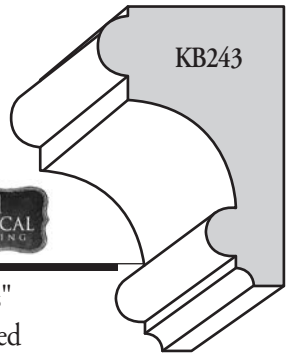

1"x 1 7/16"
Rabbeted
Beaded Cove

● Clear Pine | ○ Primed FJ Pine | △ Primed FJ Poplar | Lightweight Primed MDF

Cove Mouldings

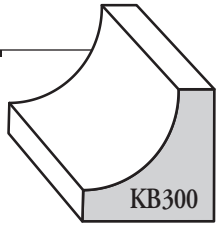

11/16" x 11/16"
Cove

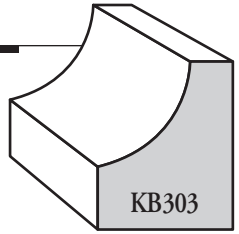

11/16" x 7/8"
Cove

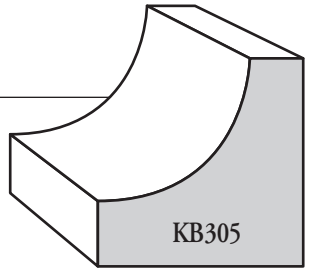

1 1/16" x 1 1/16"
Cove

● Clear Pine | ○ Primed FJ Pine | △ Primed FJ Poplar | Lightweight Primed MDF

Pilaster Mouldings

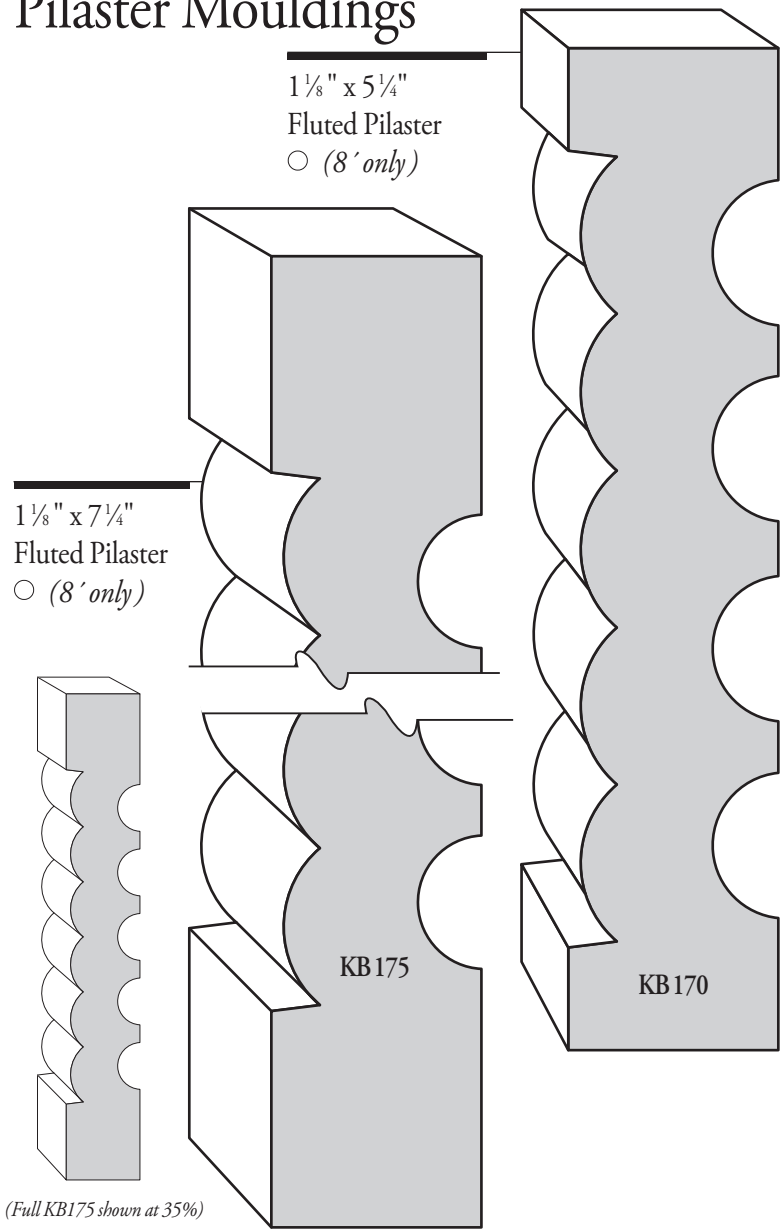

● Clear Pine | ○ Primed FJ Pine | △ Primed FJ Poplar | Lightweight Primed MDF

Pilaster & Reeded Accent

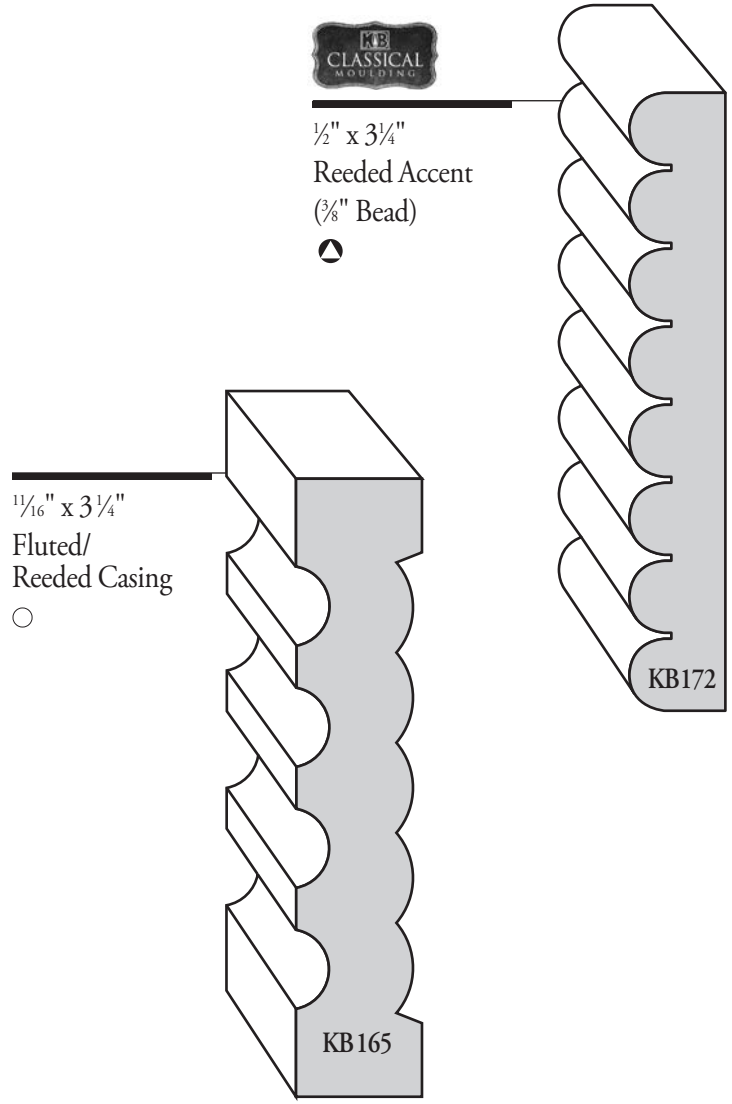

● Clear Pine | ○ Primed FJ Pine | △ Primed FJ Poplar | Lightweight Primed MDF

Chair Rail Mouldings

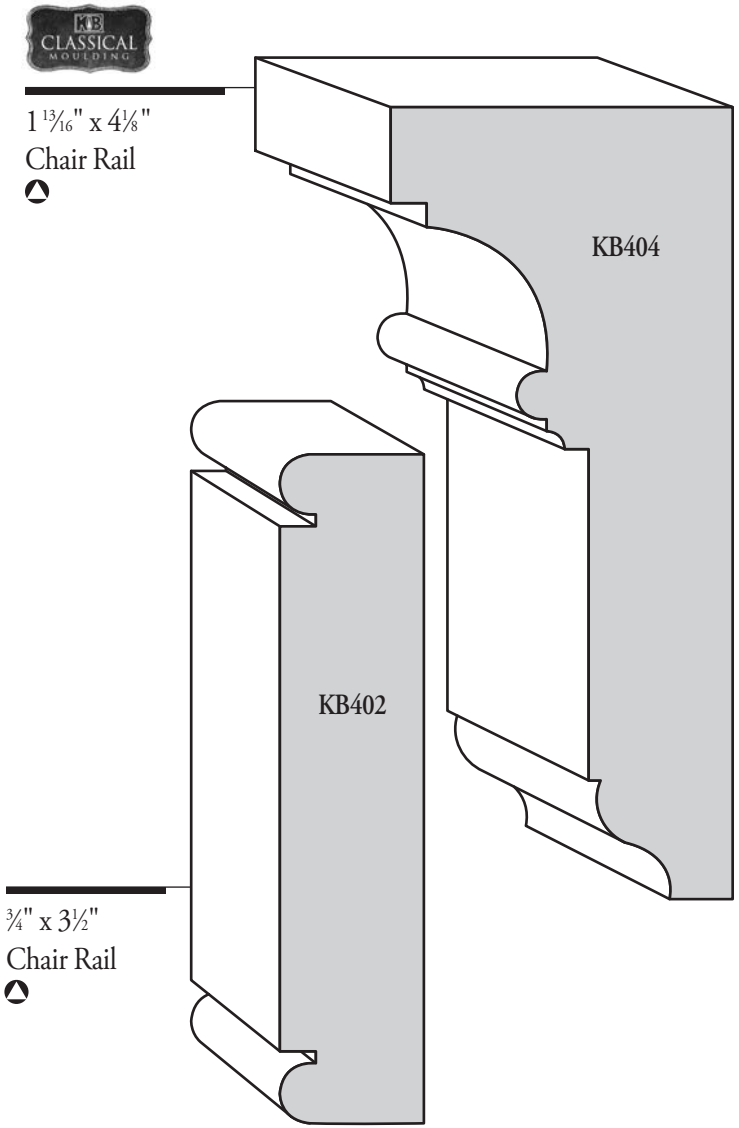

1 13/16" x 4⅛"
Chair Rail

¾" x 3½"
Chair Rail

● Clear Pine | ○ Primed FJ Pine | Primed FJ Poplar | Lightweight Primed MDF

Chair Rail Mouldings

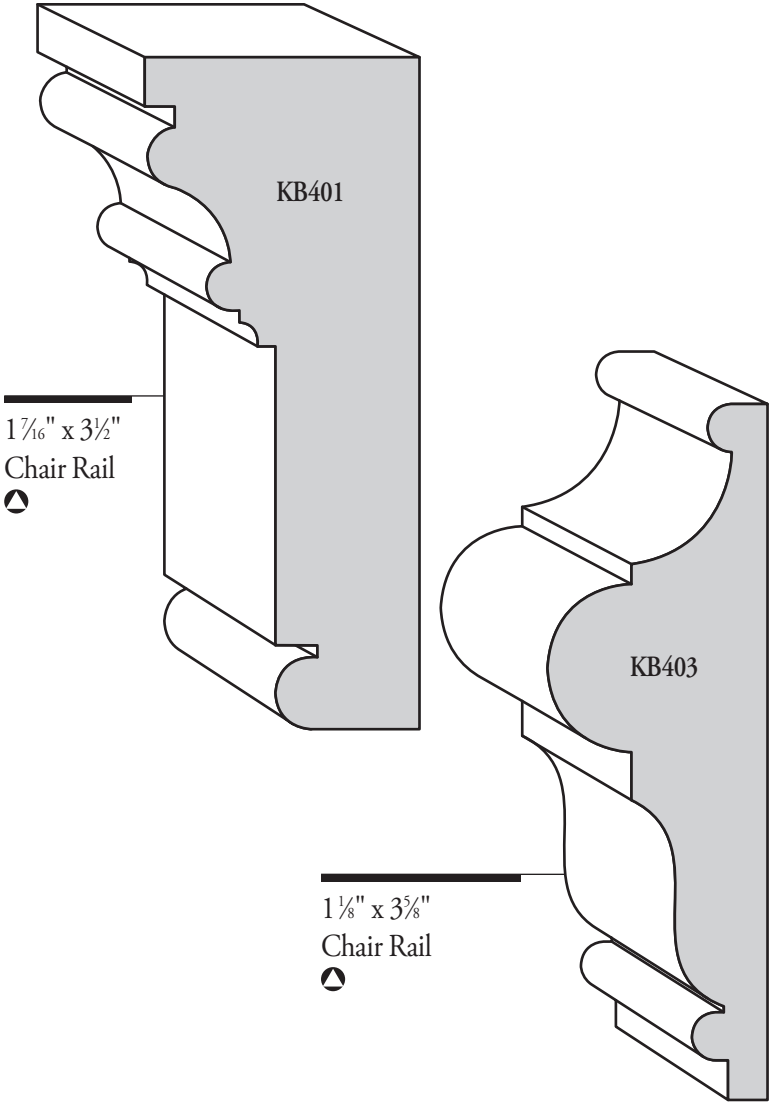

1 7/16" x 3½"
Chair Rail

1⅛" x 3⅝"
Chair Rail

● Clear Pine | ○ Primed FJ Pine | Primed FJ Poplar | Lightweight Primed MDF

Chair Rail Mouldings

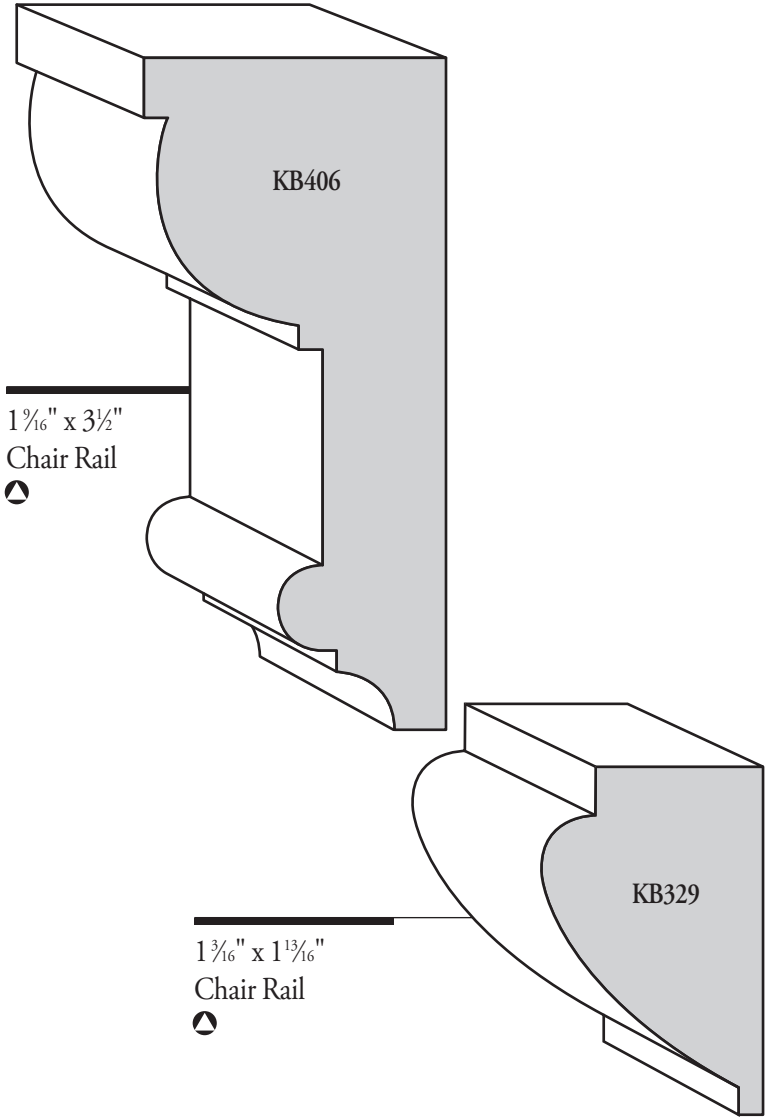

● Clear Pine | ○ Primed FJ Pine | Primed FJ Poplar | Lightweight Primed MDF

Chair Rail Mouldings

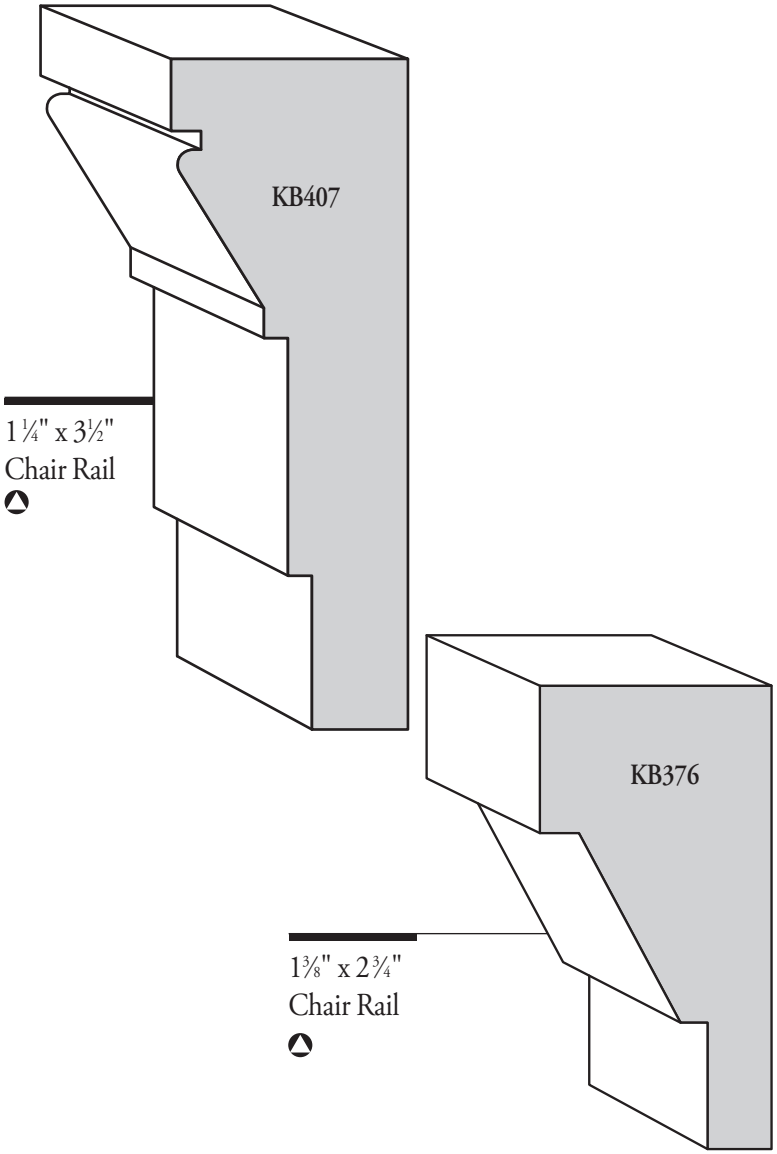

● Clear Pine | ○ Primed FJ Pine | Primed FJ Poplar | Lightweight Primed MDF

Chair Rail Mouldings

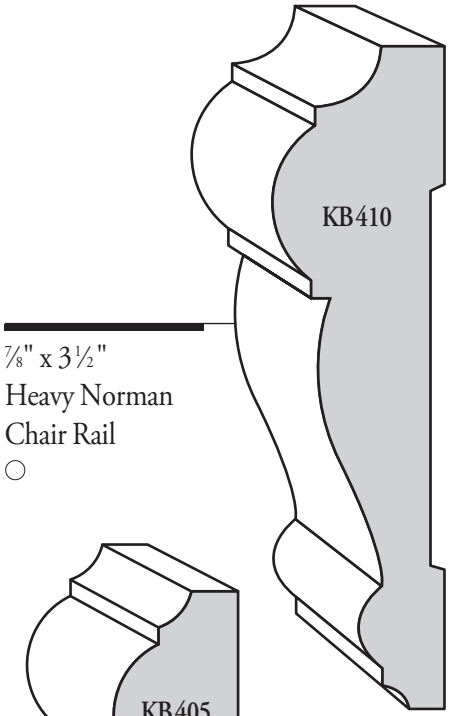

7/8" x 3 1/2"
Heavy Norman Chair Rail
○

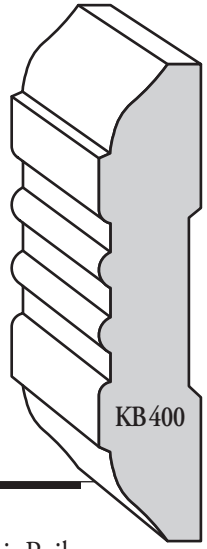

9/16" x 2 1/2"
Fluted Chair Rail
○

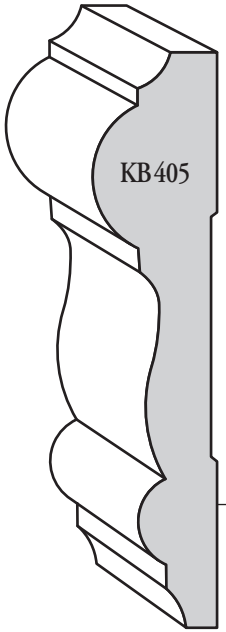

11/16" x 3"
Norman Chair Rail
○

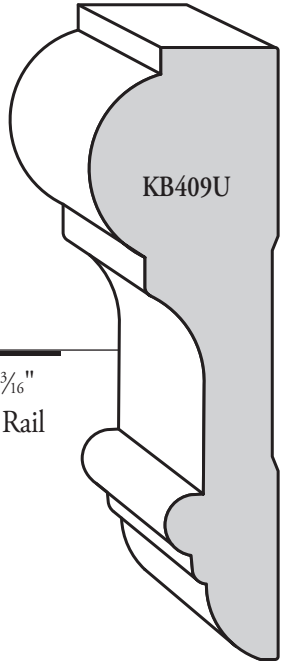

1" x 3 3/16"
Chair Rail

● Clear Pine | ○ Primed FJ Pine | △ Primed FJ Poplar | Lightweight Primed MDF

CLASSICAL MOULDING

Panel Mouldings

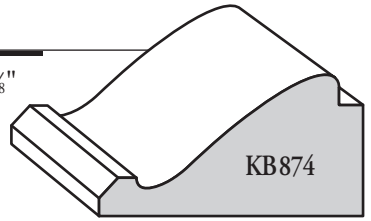

3/4" x 1 3/8"
Panel
△

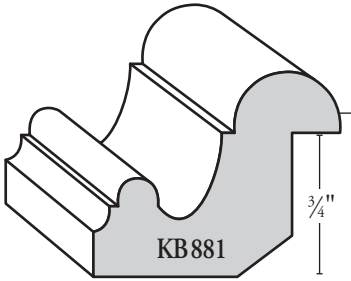

3/4" x 1 1/2"
Panel
△

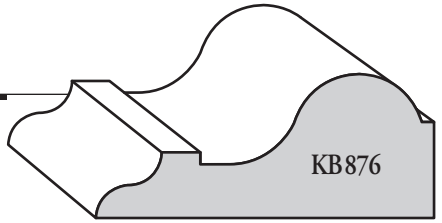

3/4" x 1 3/4"
Panel
△

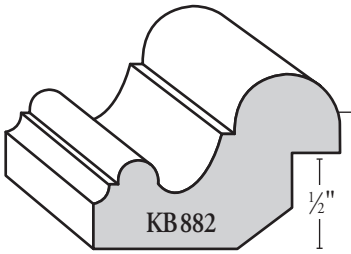

1/2" x 1 3/16"
Panel
△

● Clear Pine | ○ Primed FJ Pine | △ Primed FJ Poplar | Lightweight Primed MDF

Panel Mouldings

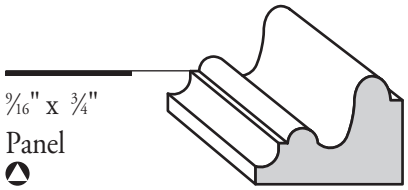

9/16" x 3/4"
Panel

KB873

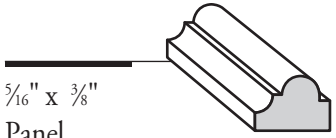

5/16" x 3/8"
Panel

KB878

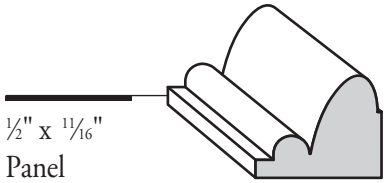

1/2" x 11/16"
Panel

KB871

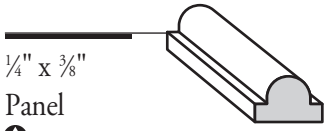

1/4" x 3/8"
Panel

KB879

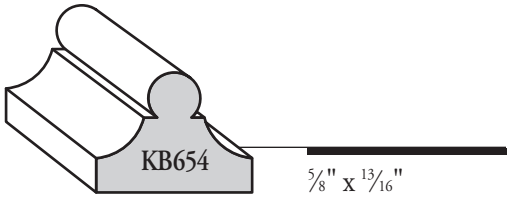

5/8" x 13/16"
Panel

KB654

● Clear Pine | ○ Primed FJ Pine | Primed FJ Poplar | Lightweight Primed MDF

Panel Mouldings

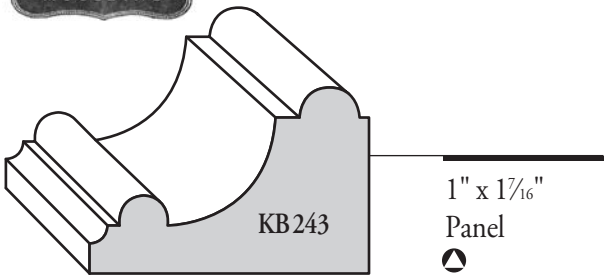

1" x 1 7/16"
Panel

KB243

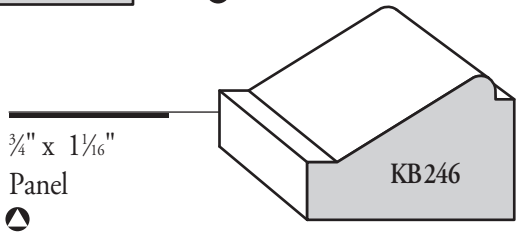

3/4" x 1 1/16"
Panel

KB246

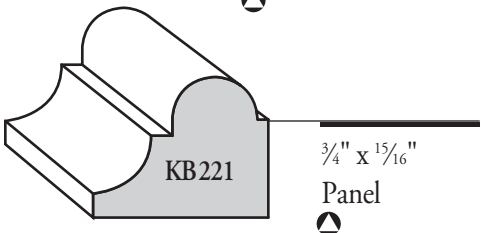

3/4" x 15/16"
Panel

KB221

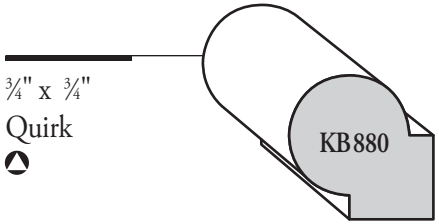

3/4" x 3/4"
Quirk

KB880

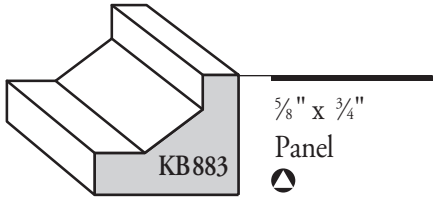

5/8" x 3/4"
Panel

KB883

● Clear Pine | ○ Primed FJ Pine | Primed FJ Poplar | Lightweight Primed MDF

Panel Mouldings

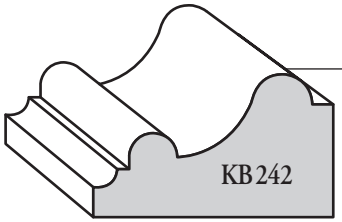

¾" x 1¼"
Panel

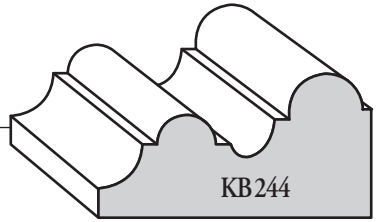

¾" x 1⁷⁄₁₆"
Panel

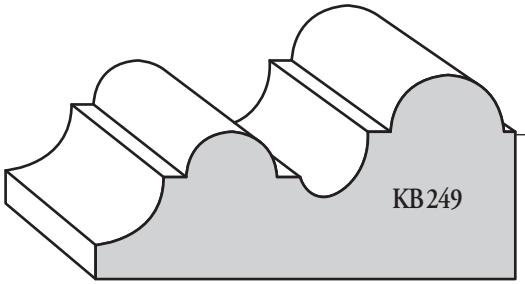

1¹⁄₁₆" x 2³⁄₁₆"
Panel

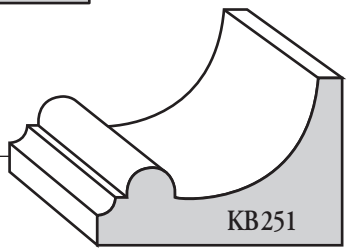

⅞" x 1¼"
Panel

● Clear Pine | ○ Primed FJ Pine | ▲ Primed FJ Poplar | Lightweight Primed MDF

Panel Mouldings

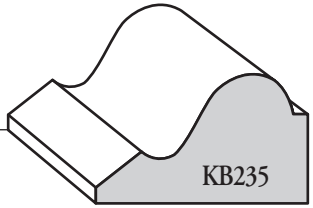

¹¹⁄₁₆" x 1⅛"
Panel

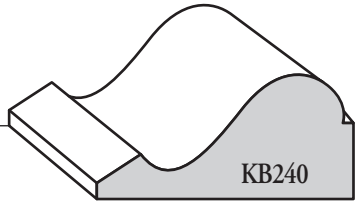

¹¹⁄₁₆" x 1⅜"
Panel

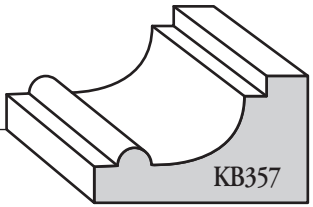

²¹⁄₃₂" x 1⅛"
Panel

● Clear Pine | ○ Primed FJ Pine | ▲ Primed FJ Poplar | Lightweight Primed MDF

Panel Mouldings

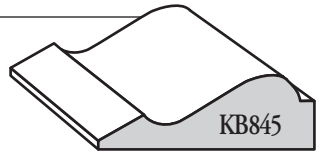

⅜" x 1⅛"
Panel Moulding
○

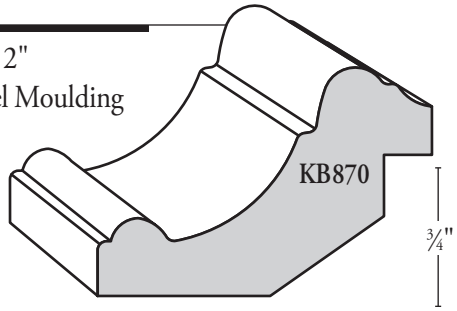

¾" x 2"
Panel Moulding
○

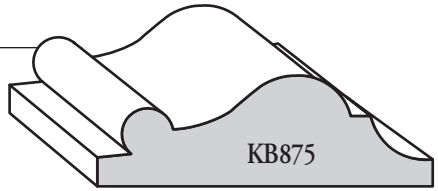

⅝" x 1¾"
Panel Moulding
○

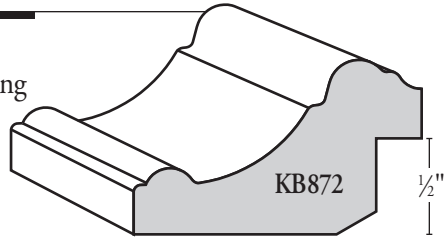

¾" x 1½"
Panel Moulding
○

● Clear Pine	○ Primed FJ Pine	Primed FJ Poplar	Lightweight Primed MDF

MOULDING DESIGN GUIDE: PANELS

Use our in-stock panel mouldings on their own or in combination with boards to create your own unique style. We made it easy to see how Applied, Inset, and Raised Panel Mouldings can enhance your project!

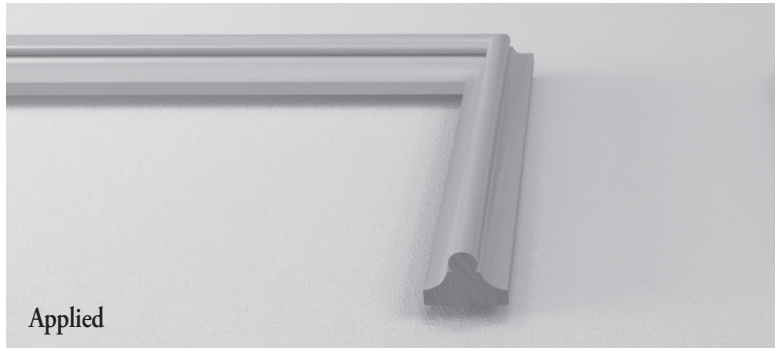

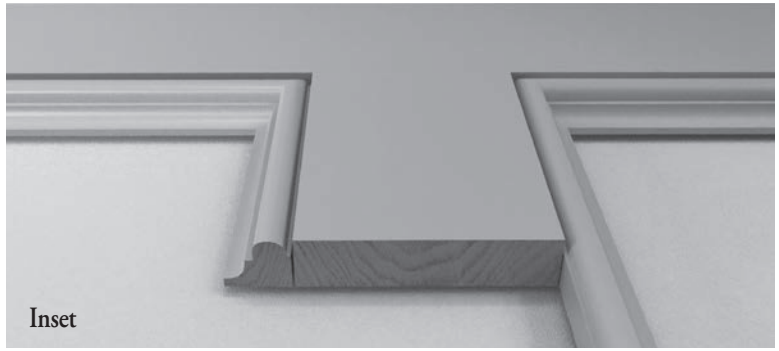

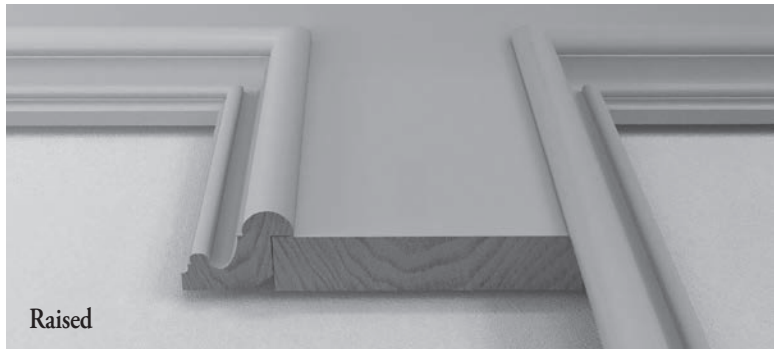

Quarter Round Mouldings

¼" Quarter Round
●

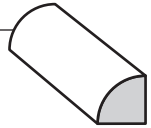

KB255

11/16" Quarter Round / Floor Moulding
● ○ ▲

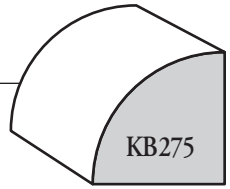

KB275

⅜" Quarter Round
●

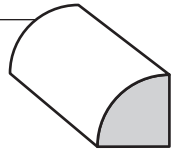

KB260

⅞" Quarter Round
●

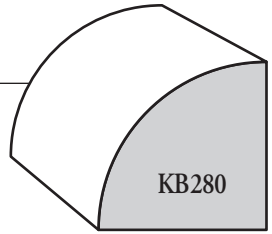

KB280

½" Quarter Round
● ○

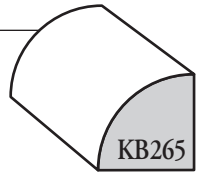

KB265

1⅛" Quarter Round
●

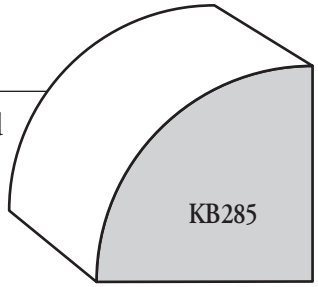

KB285

⅝" Quarter Round
●

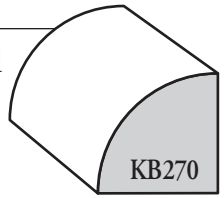

KB270

● Clear Pine | ○ Primed FJ Pine | ▲ Oak | Primed FJ Poplar | Lightweight Primed MDF

Hand Rails

1 9/16" x 1 11/16"
Hand Rail
●

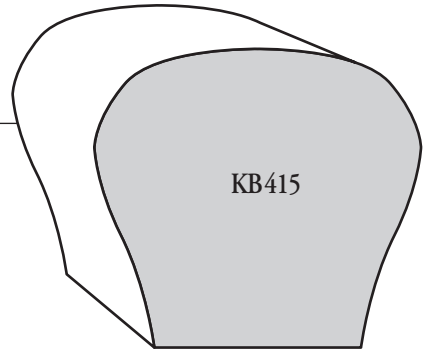

KB415

2¼" x 2⅜"
8', 10', 12', 14', 16'
Hand Rail
▲

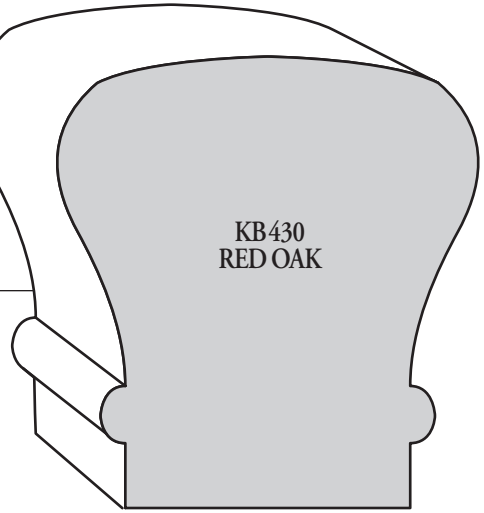

KB430
RED OAK

● Clear Pine | ○ Primed FJ Pine | ▲ Oak | Primed FJ Poplar | Lightweight Primed MDF

Hand Rails

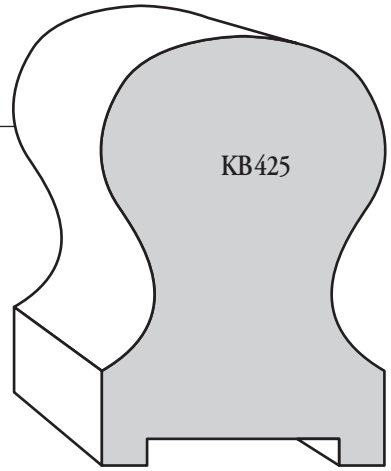

1½" x 2¼"
Hand Rail
●

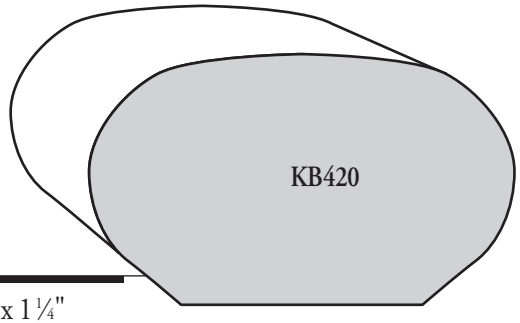

2¼" x 1¼"
Oval Hand Rail
●

● Clear Pine | ○ Primed FJ Pine | Primed FJ Poplar | Lightweight Primed MDF

Stop Mouldings

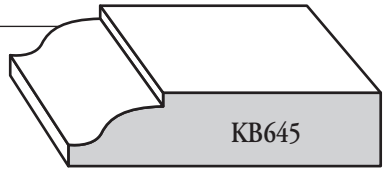

⅜" x 1⅝"
Colonial Stop
○

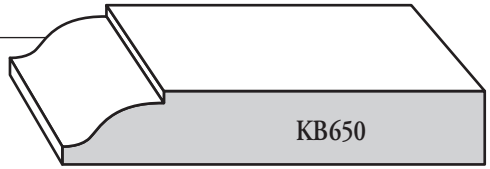

⅜" x 2¼"
Colonial Stop
○

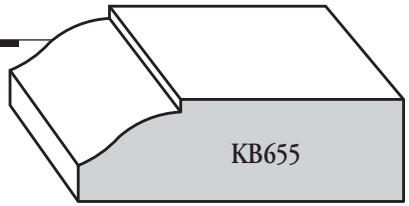

½" x 1⅝"
Colonial Stop
○

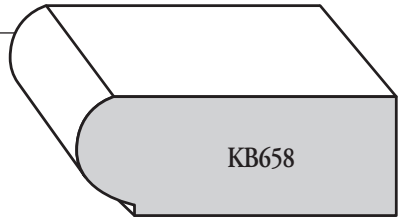

⅝" x 1⅝"
Bull Nose Stop
○

● Clear Pine | ○ Primed FJ Pine | Primed FJ Poplar | Lightweight Primed MDF

Stop Mouldings

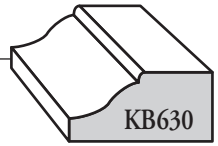

3/8" x 3/4"
Colonial Stop
●

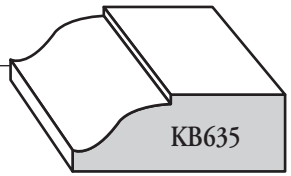

3/8" x 1 1/8"
Colonial Stop
○

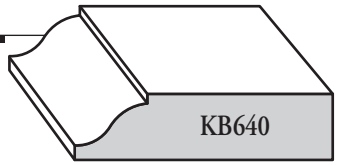

3/8" x 1 3/8"
Colonial Stop
● ○

● Clear Pine | ○ Primed FJ Pine | ▲ Oak | Primed FJ Poplar | Lightweight Primed MDF

Shoe & Stop Mouldings

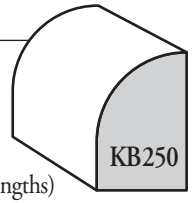

1/2" x 3/4"
Shoe Moulding
● ○ ▲
Flex In-Stock (8', 10', 12' lengths)

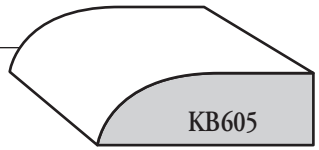

3/8" x 1 1/8"
Clam Stop
○

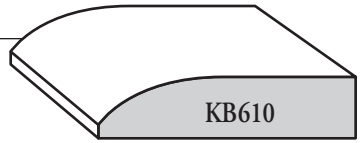

3/8" x 1 3/8"
Clam Stop
○

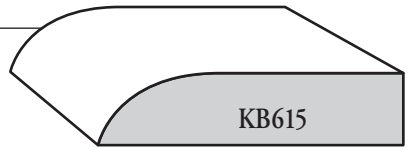

3/8" x 1 5/8"
Clam Stop
○

● Clear Pine | ○ Primed FJ Pine | ▲ Oak | Primed FJ Poplar | Lightweight Primed MDF

Baluster

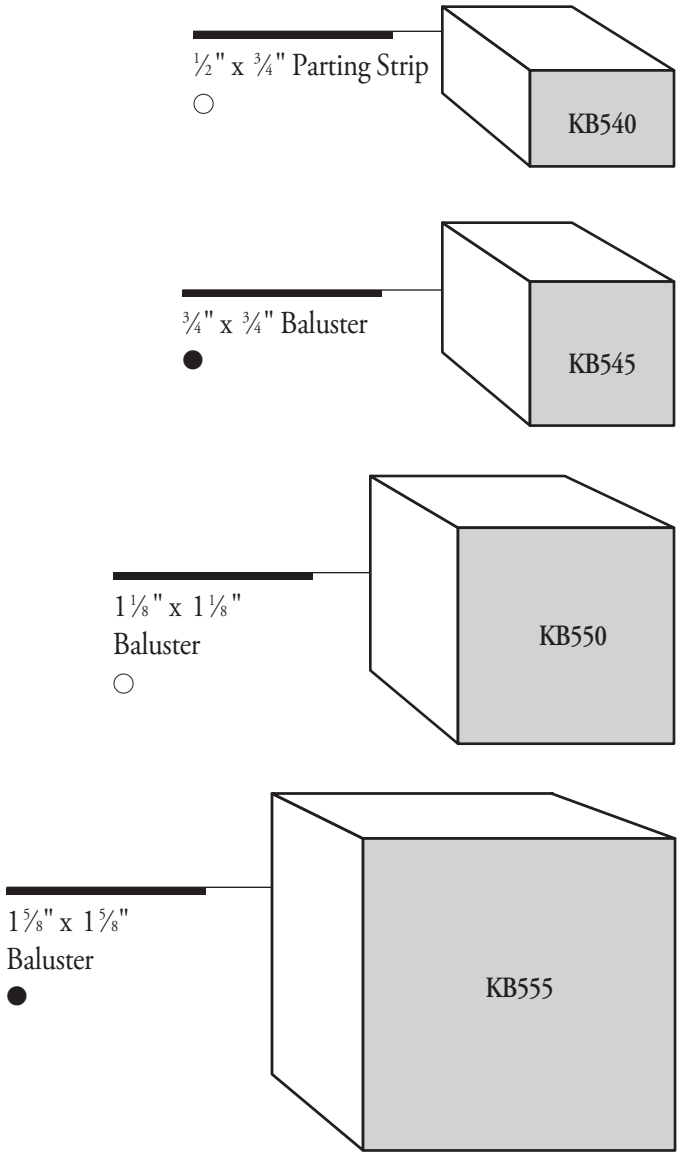

● Clear Pine | ○ Primed FJ Pine | Primed FJ Poplar | Lightweight Primed MDF

Lattice Mouldings

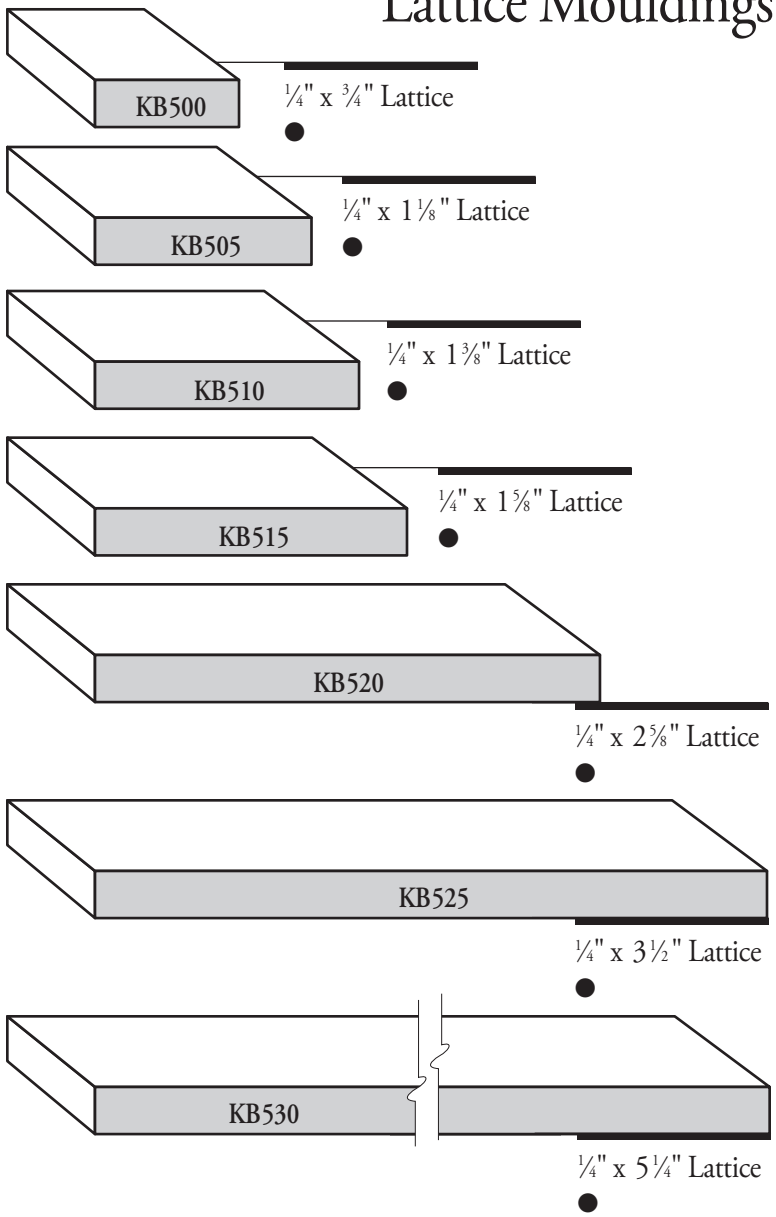

● Clear Pine | ○ Primed FJ Pine | Primed FJ Poplar | Lightweight Primed MDF

Pole Mouldings

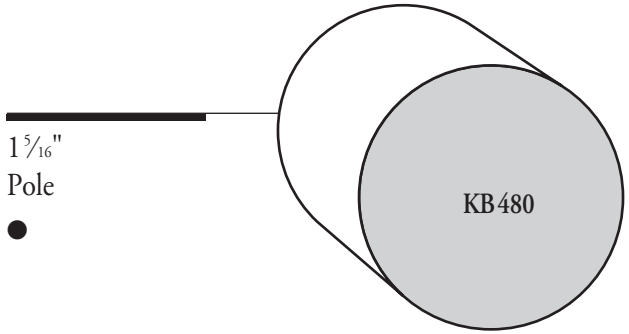

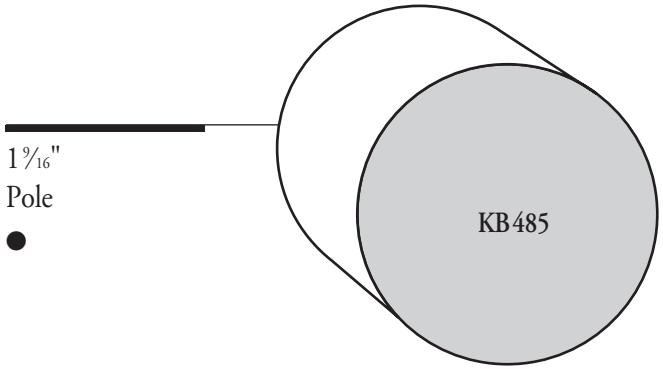

Kuiken Brothers stocks white melamine shelving boards, adjustable steel closet rods, closet rod hardware and cedar closet lining for custom built closets.

● Clear Pine | ○ Primed FJ Pine | Primed FJ Poplar | Lightweight Primed MDF

Half Round Mouldings

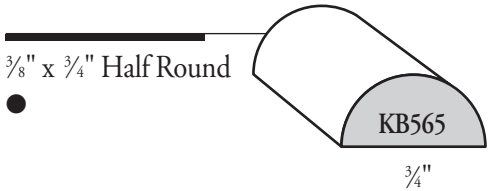

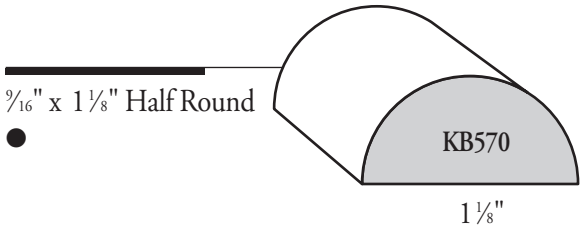

● Clear Pine | ○ Primed FJ Pine | Primed FJ Poplar | Lightweight Primed MDF

Astragal & Mullion Center

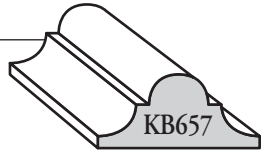

3/8" x 7/8"
Astragal
○

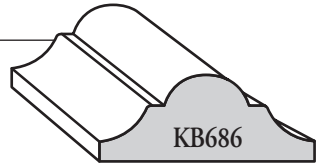

7/16" x 1 1/8"
Astragal
○

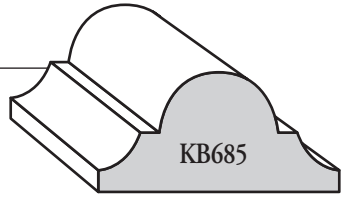

11/16" x 1 3/8"
Astragal
○

KB CLASSICAL MOULDING

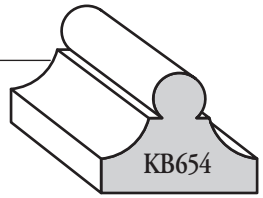

5/8" x 13/16"
Astragal
△

● Clear Pine | ○ Primed FJ Pine | △ Primed FJ Poplar | Lightweight Primed MDF

Astragal & Mullion Center

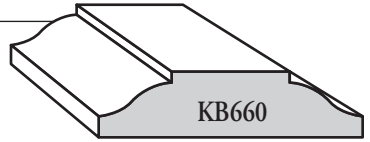

3/8" x 1 3/8"
Astragal
●

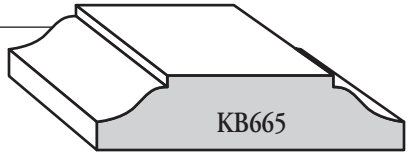

3/8" x 1 5/8"
Astragal
●

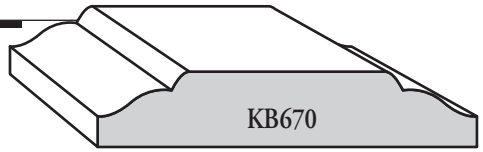

3/8" x 2"
Astragal
●

● Clear Pine | ○ Primed FJ Pine | △ Primed FJ Poplar | Lightweight Primed MDF

Sanitary Corner Guard

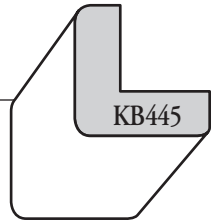

¾" x ¾"
Corner Guard
○

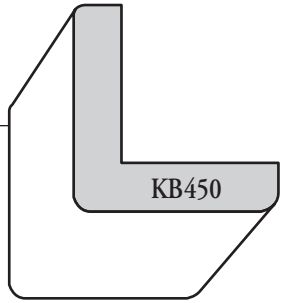

1⅛" x 1⅛"
Corner Guard
○

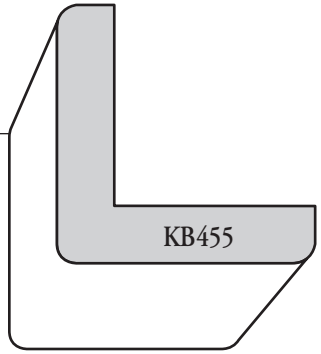

1⅜" x 1⅜"
Corner Guard
○

● Clear Pine | ○ Primed FJ Pine | Primed FJ Poplar | Lightweight Primed MDF

Colonial Corner Guard

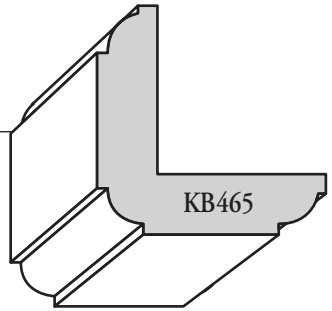

1⅛" x 1⅛"
Colonial Corner Guard
○

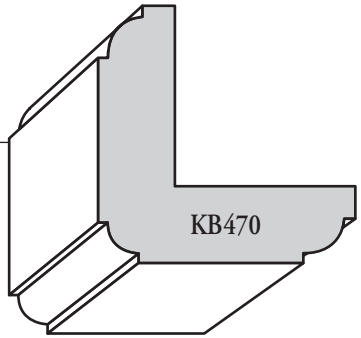

1⅜" x 1⅜"
Colonial Corner Guard
○

● Clear Pine | ○ Primed FJ Pine | Primed FJ Poplar | Lightweight Primed MDF

Glass Bead & Picture Rail

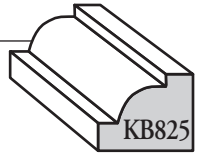

3/8" x 1/2"
Glass Bead
●

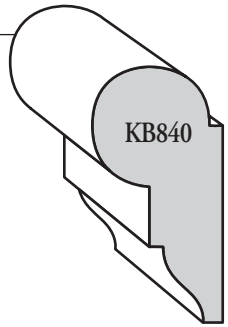

11/16" x 1 3/8"
Picture Moulding
●

● Clear Pine | ○ Primed FJ Pine | Primed FJ Poplar | Lightweight Primed MDF

Drip Cap & Brick Moulding

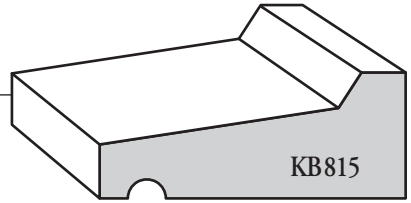

11/16" x 1 5/8"
Drip Cap Moulding
○

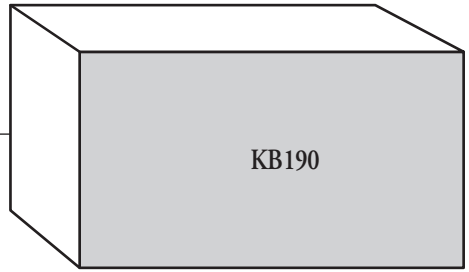

1 1/8" x 2"
Flat Casing
○

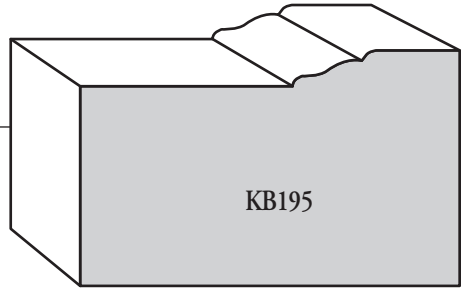

1 1/4" x 2"
Brick Moulding
○

● Clear Pine | ○ Primed FJ Pine | Primed FJ Poplar | Lightweight Primed MDF

Shelf Edge & Skewback

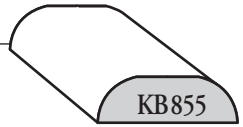

¼" x ¾"
Plain Shelf Edge
●

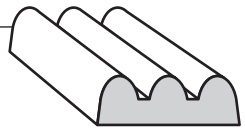

¼" x ¾"
Beaded Shelf Edge
●

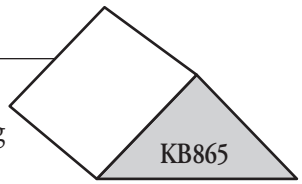

¾" x ¾"
Skewback Moulding
●

● Clear Pine | ○ Primed FJ Pine | Primed FJ Poplar | Lightweight Primed MDF

Extension Jamb

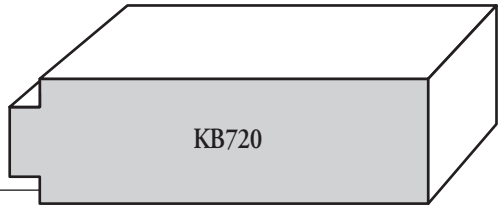

11/16" x 2 3/16"
Andersen Tilt Wash Extension Jamb
○

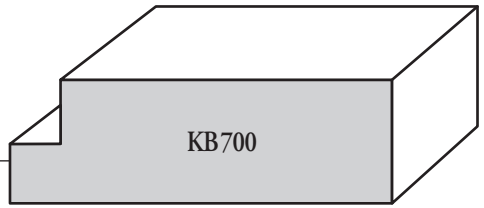

11/16" x 2"
Andersen Extension Jamb "Casement & Awning"
○

● Clear Pine | ○ Primed FJ Pine | Primed FJ Poplar | Lightweight Primed MDF

Extension Jamb

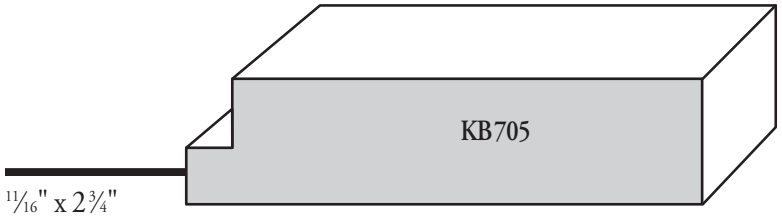

11/16" x 2¾"
Andersen Extension Jamb "Casement & Awning"
○

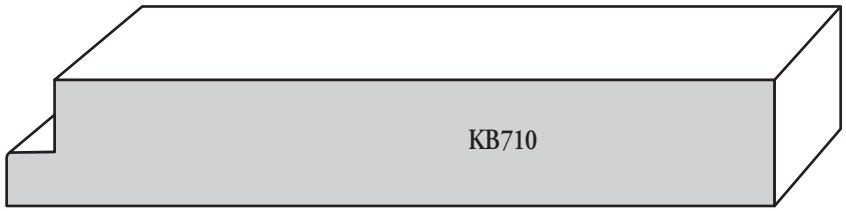

11/16" x 4"
Andersen Extension Jamb "Casement & Awning"
○

● Clear Pine | ○ Primed FJ Pine | Primed FJ Poplar | Lightweight Primed MDF

Window Stool

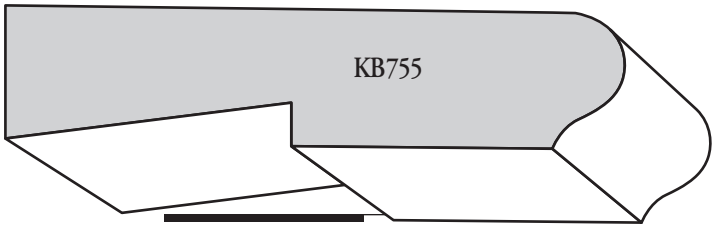

11/16" x 3¼" Window Stool
○

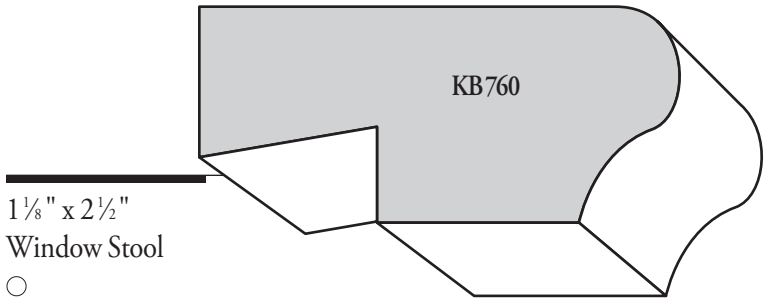

1⅛" x 2½"
Window Stool
○

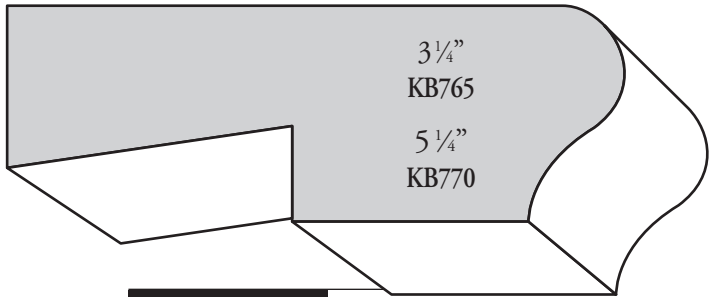

1⅛" x 3¼" Window Stool ○
1⅛" x 5¼" Window Stool ○

● Clear Pine | ○ Primed FJ Pine | Primed FJ Poplar | Lightweight Primed MDF

Window Stool

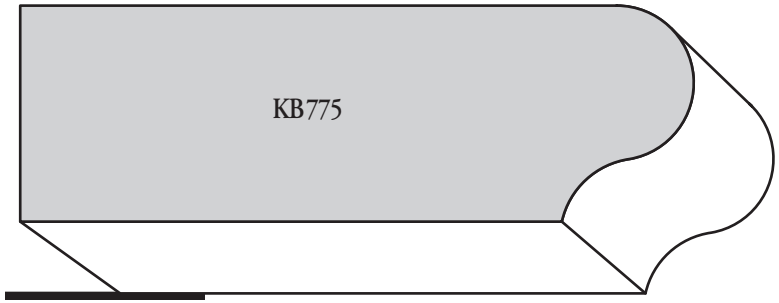

1 1/8" x 3 1/2"
Flat Bottom Stool
○

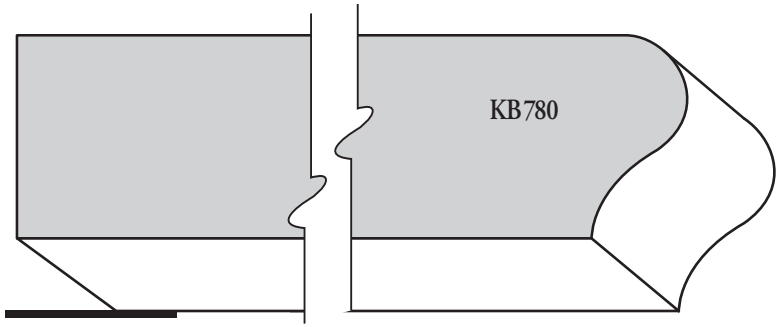

1 1/16" x 5 1/4"
Flat Bottom Stool
○

● Clear Pine | ○ Primed FJ Pine | Primed FJ Poplar | Lightweight Primed MDF

Window Stool

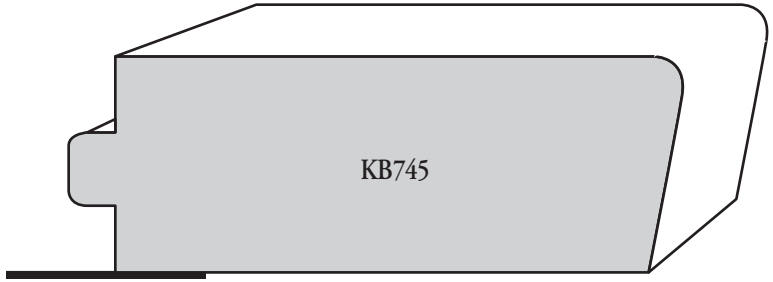

1 1/8" x 3 1/4"
Andersen Window Stool "Casement & Awning"
●

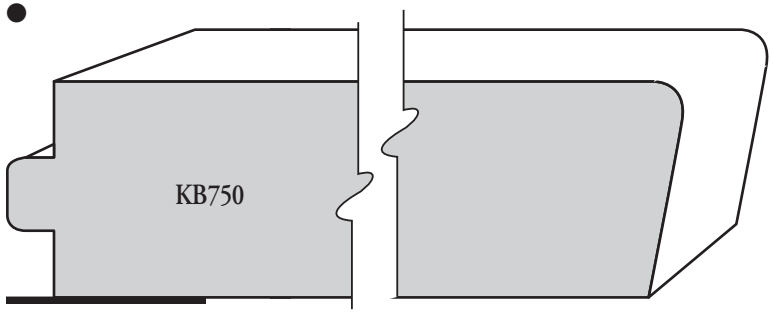

1 1/8" x 5 3/4"
Andersen Window Stool "Casement & Awning"
○

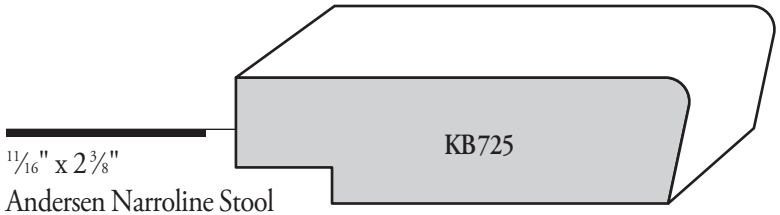

11/16" x 2 3/8"
Andersen Narroline Stool
○

● Clear Pine | ○ Primed FJ Pine | Primed FJ Poplar | Lightweight Primed MDF

Window Stool

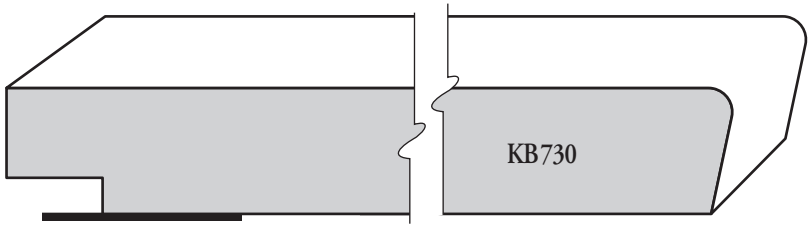

11/16" x 4 3/8"
Andersen Narroline Stool
○

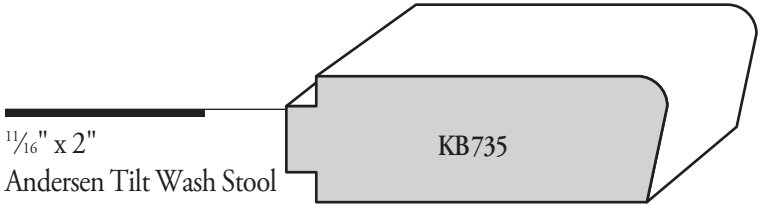

11/16" x 2"
Andersen Tilt Wash Stool
○

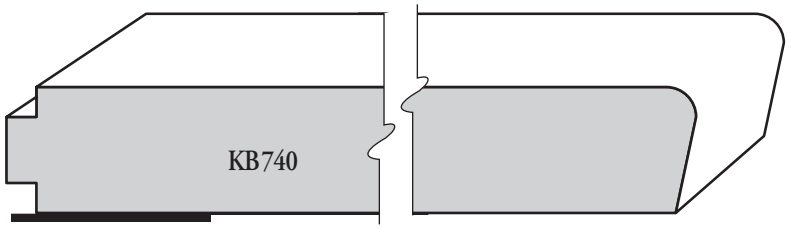

11/16" x 4"
Andersen Tilt Wash Stool
○

● Clear Pine | ○ Primed FJ Pine | ▲ Oak | Primed FJ Poplar | Lightweight Primed MDF

Window Sill & Stool

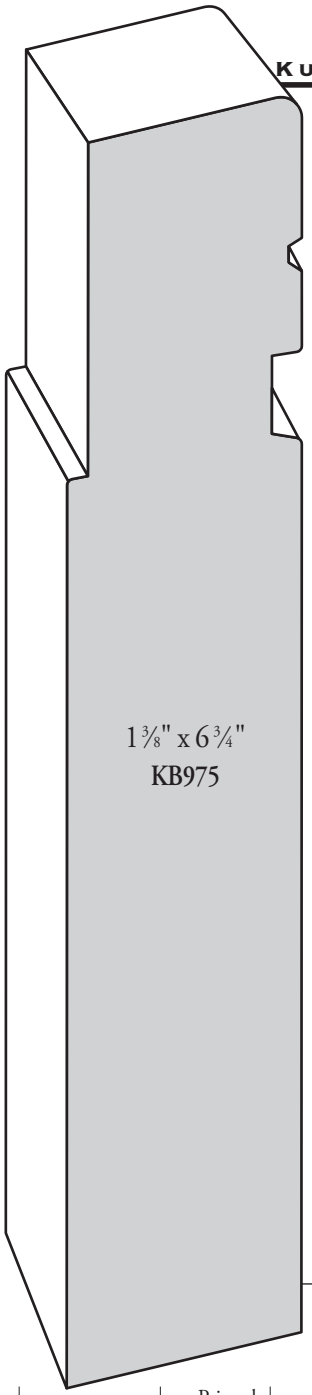

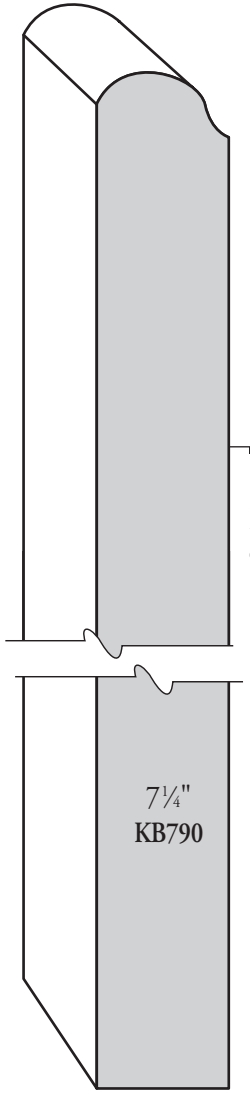

11/16" x 7 1/4"
Flat Bottom Stool
○

Window Sill
○

● Clear Pine | ○ Primed FJ Pine | ▲ Oak | Primed FJ Poplar | Lightweight Primed MDF

Hearth Border, Landing Tread & Nosing

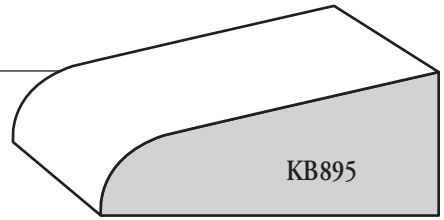

5/8" x 1 5/8"
Hearth Border
▲

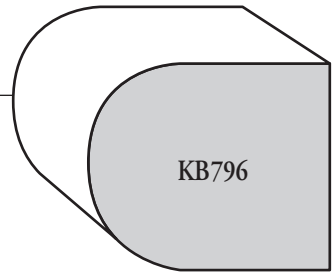

1 1/16" x 1 3/8"
Nosing
▲

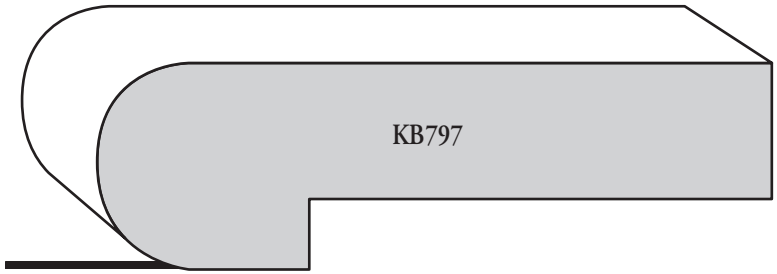

1 1/8" x 3 1/2"
Landing Tread
▲

● Clear Pine | ○ Primed FJ Pine | ▲ Oak | Primed FJ Poplar | Lightweight Primed MDF

Door Sills & Saddles

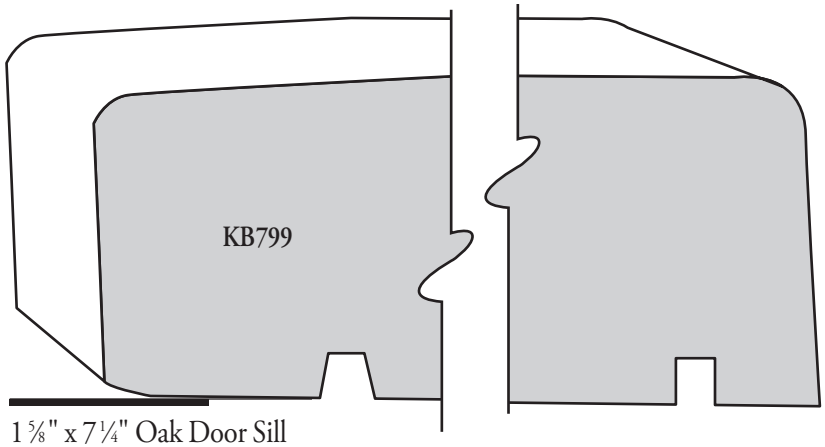

1 5/8" x 7 1/4" Oak Door Sill
▲

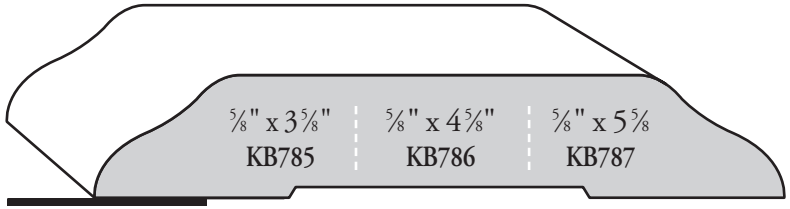

Oak Saddle
▲

● Clear Pine | ○ Primed FJ Pine | ▲ Oak | Primed FJ Poplar | Lightweight Primed MDF

Plinth Blocks

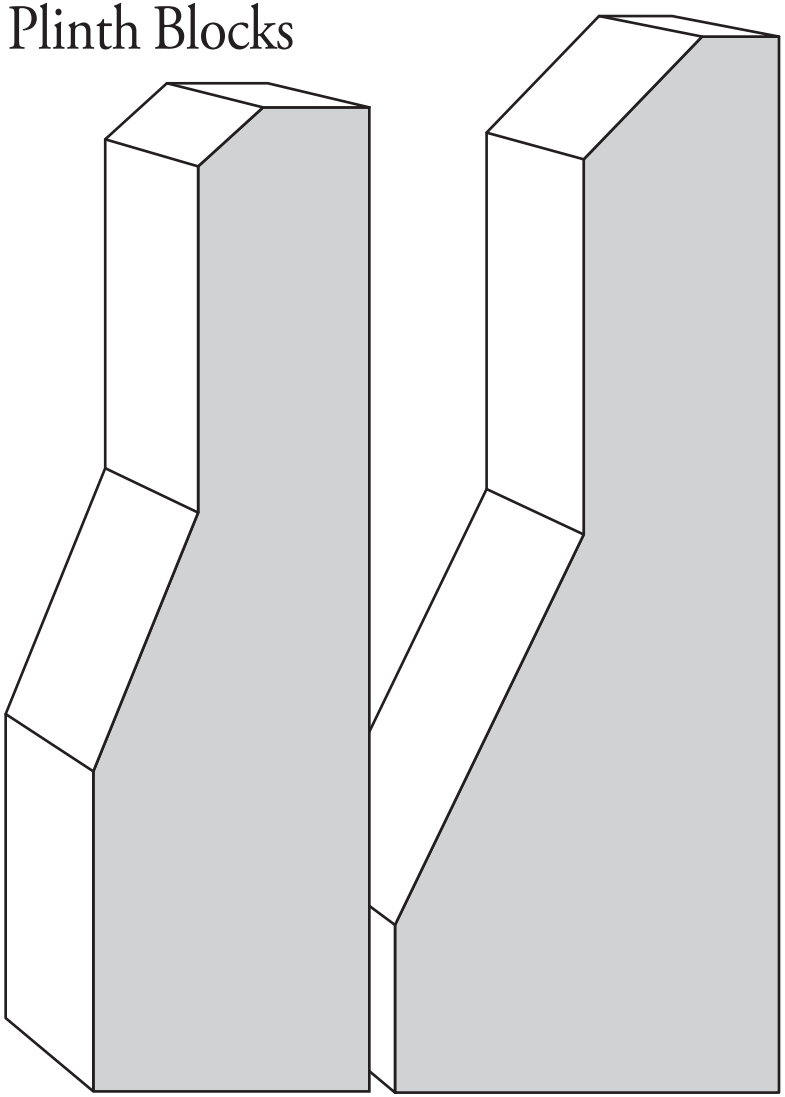

PB518*
1 7/16" x 5 1/8"
Plinth Block
△

PB550*
2" x 5 1/2"
Plinth Block
△

PB418 (1 1/4" x 4 1/8") is also available for 3 1/2" casings

**Short lead time. Solid poplar only, not primed.*

the Prestige Line

ULTRA LITE MDF MOULDINGS

The Prestige Line strikes a balance between beauty and cost. These Ultra Lite MDF mouldings are large, (so large we couldn't show all of them at full size) decorative pre-primed white, suitable for finish painting. While we do not stock this line, these profiles are readily available and have a short lead time.

the Prestige Line

ULTRA LITE MDF MOULDINGS

ALL PROFILES SHOWN AT 20%

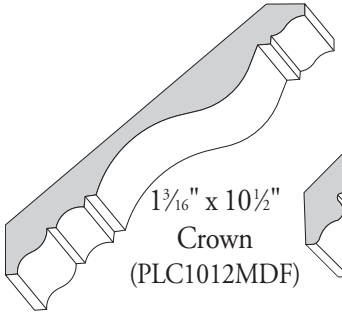

1 3/16" x 10 1/2"
Crown
(PLC1012MDF)

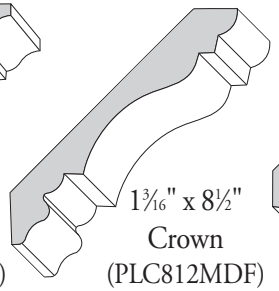

1 3/16" x 8 1/2"
Crown
(PLC812MDF)

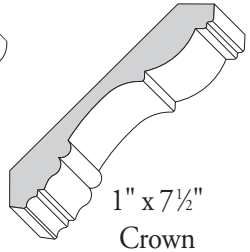

1" x 7 1/2"
Crown
(PLC712MDF)

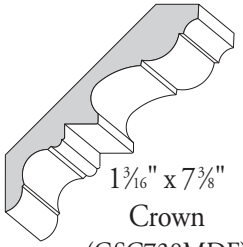

1 3/16" x 7 3/8"
Crown
(GSC738MDF)

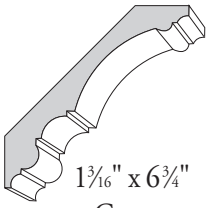

1 3/16" x 6 3/4"
Crown
(PLC634MDF)

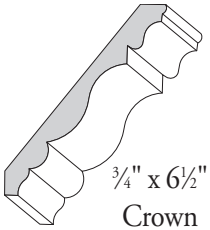

3/4" x 6 1/2"
Crown
(PLC612MDF)

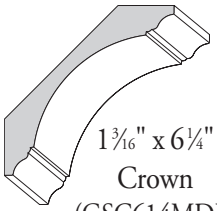

1 3/16" x 6 1/4"
Crown
(GSC614MDF)

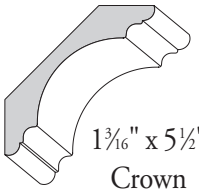

1 3/16" x 5 1/2"
Crown
(GSC512MDF)

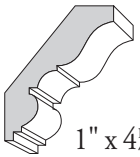

1" x 4 1/2"
Crown
(GSC412MDF)

the Prestige Line

ULTRA LITE MDF MOULDINGS

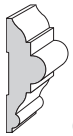

1" x 3"
Chair Rail
(ES7MDF)

1 3/16" x 3 3/4"
Chair Rail
(PLR334MDF)

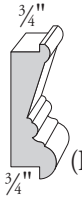

1 3/16" x 3 1/2"
Panel
(PLP312MDF)

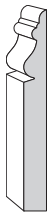

5/8" x 5 1/4"
Base
(PLB8416MDF)

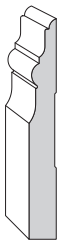

3/4" x 5 3/4"
Base
(GSB534MDF)

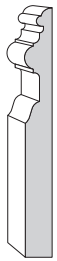

3/4" x 6 1/2"
Base
(PLB612MDF)

3/4" x 7"
Base
(BB7MDF)

5/8" x 7 1/4"
Base
(PLB714MDF)

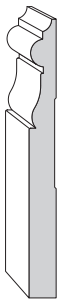

3/4" x 7 1/4"
Base
(GSB725MDF)

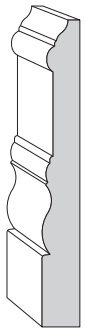

1" x 8"
Base
(PLB8MDF)

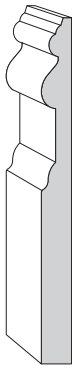

3/4" x 9"
Base
(PLB9MDF)

the Prestige Line

ULTRA LITE MDF MOULDINGS

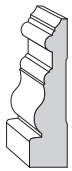

1" x 3 7/8" Casing (PL378MDF)

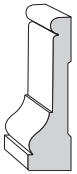

1 1/8" x 4" Casing (LK4MDF)

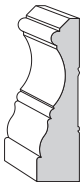

1 1/8" x 4 1/4" Casing (GS441MDF)

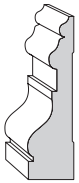

1 3/16" x 4 1/4" Casing (GS425MDF)

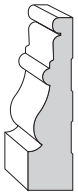

1 1/16" x 4 1/2" Casing (GS419MDF)

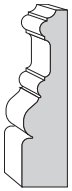

1 3/16" x 4 5/8" Casing (PL458MDF)

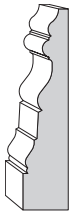

1 3/16" x 5 1/4" Casing (PL514MDF)

7/8" x 1 3/4" Base Cap (BS134MDF)

GSC412 Crown with CB312 Crown Backer

GS434 Casing

EXTERIOR TRIM

We stock a wide selection of materials, including PVC and TruExterior for durable exterior applications. Stock inventory includes an extensive selection of moulding, boards, plywood and beadboard and pattern stock for traditional, transitional, and modern designs. Extensive inventory across all locations allows you to source the right materials quickly.

PVC Crown

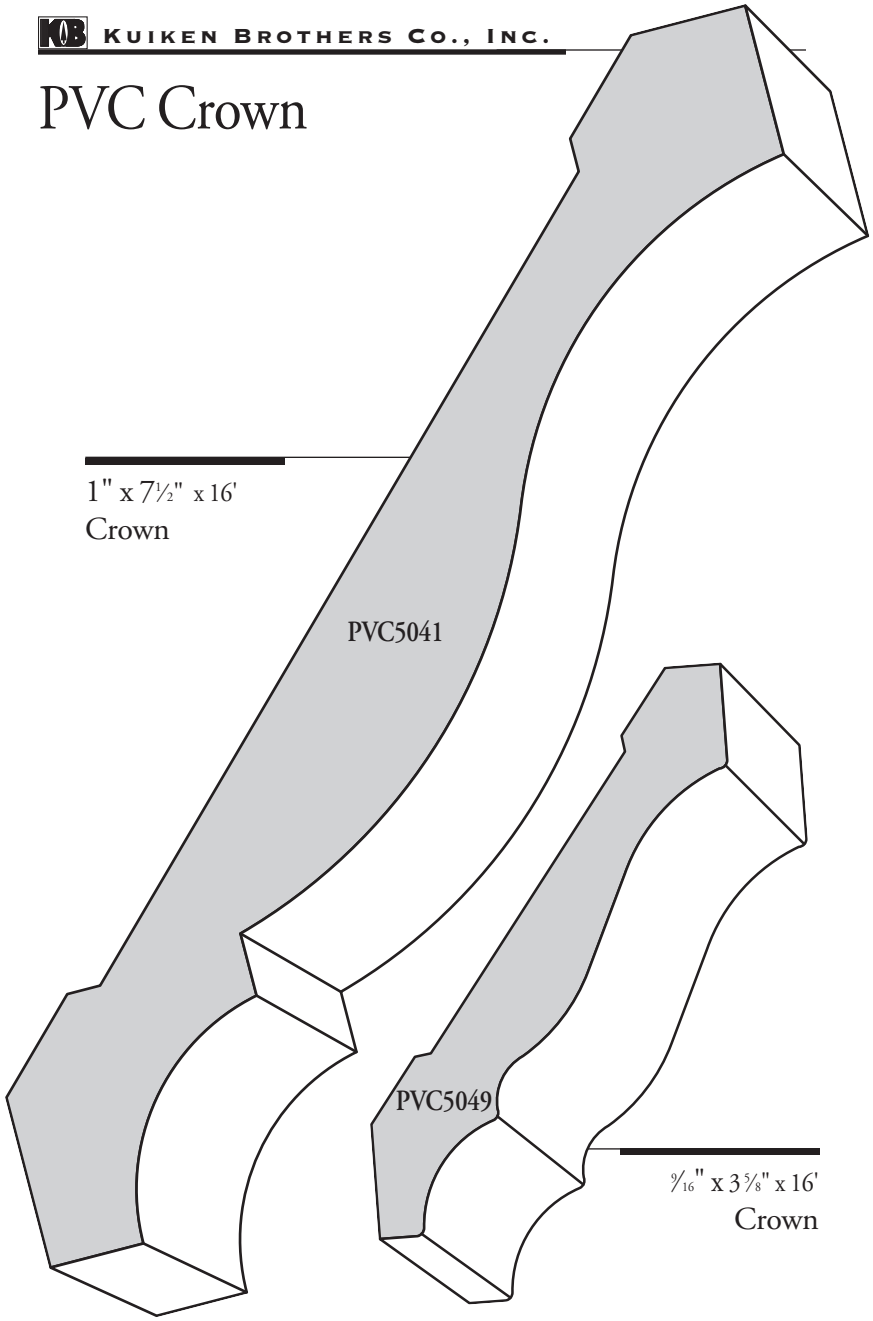

PVC Crown

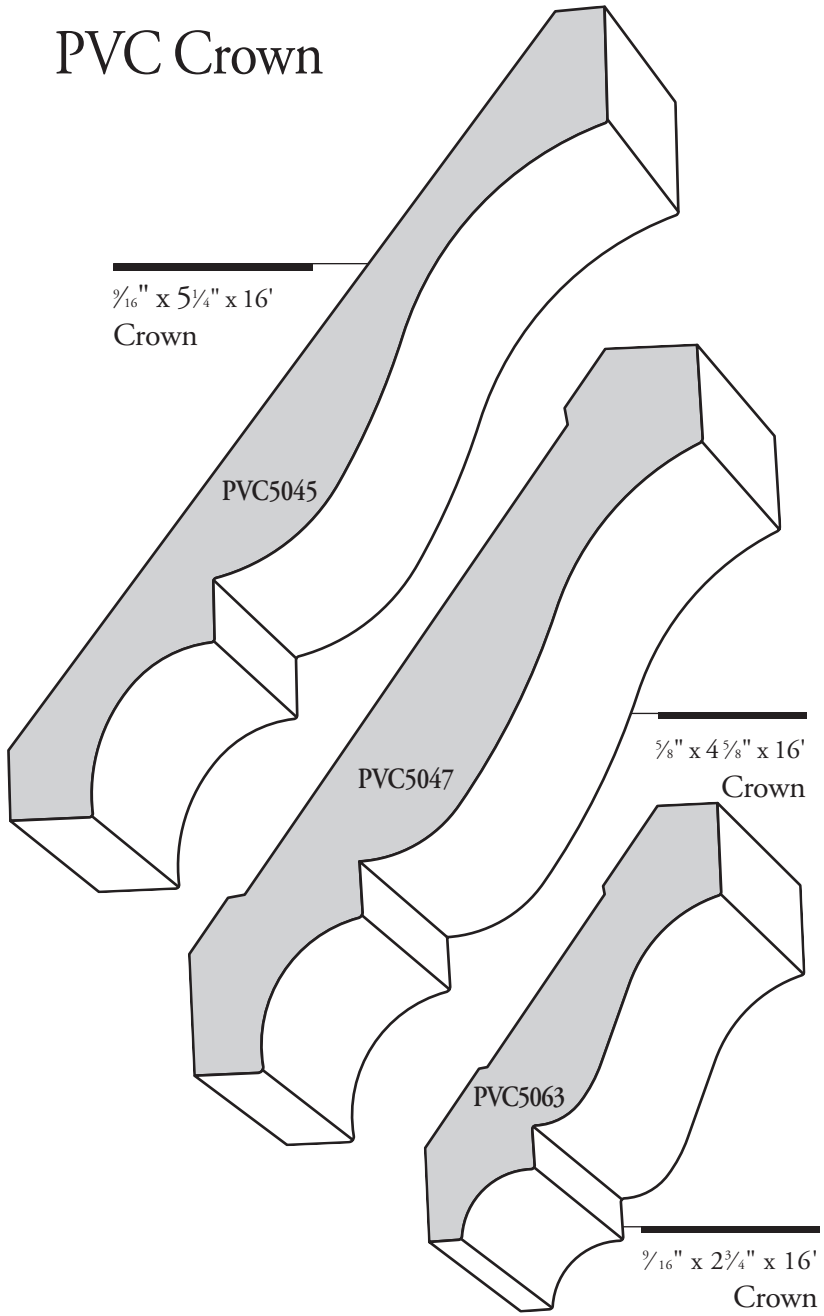

PVC Crown

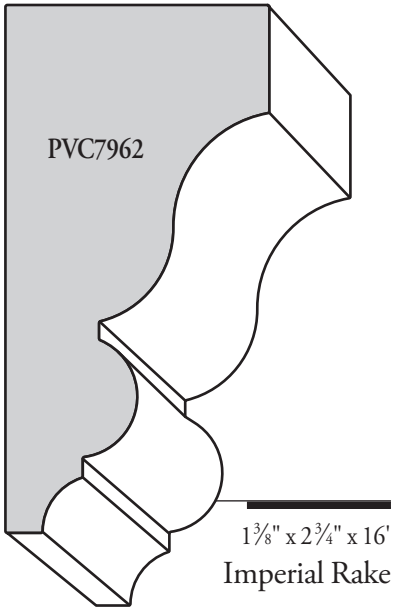

1⅜" x 2¾" x 16'
Imperial Rake

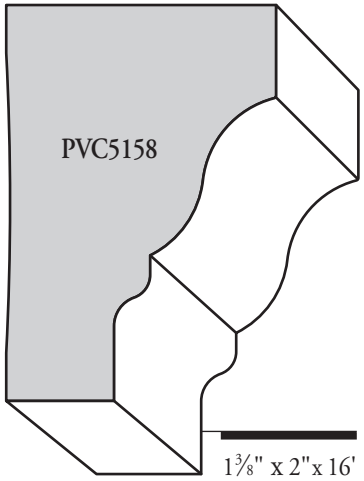

1⅜" x 2"x 16'
Rams Crown

PVC Shingle Band

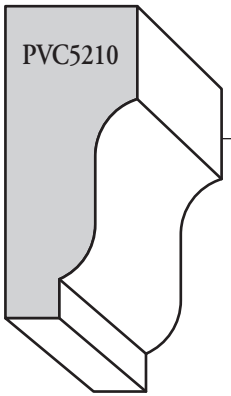

1¹⁄₁₆" x 1⅝" x 16'
Shingle Band

1¹⁄₁₆" x 2" x 16'
Rake

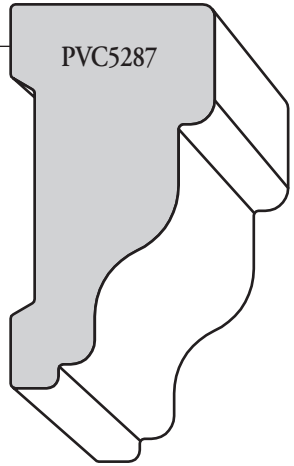

PVC Crown

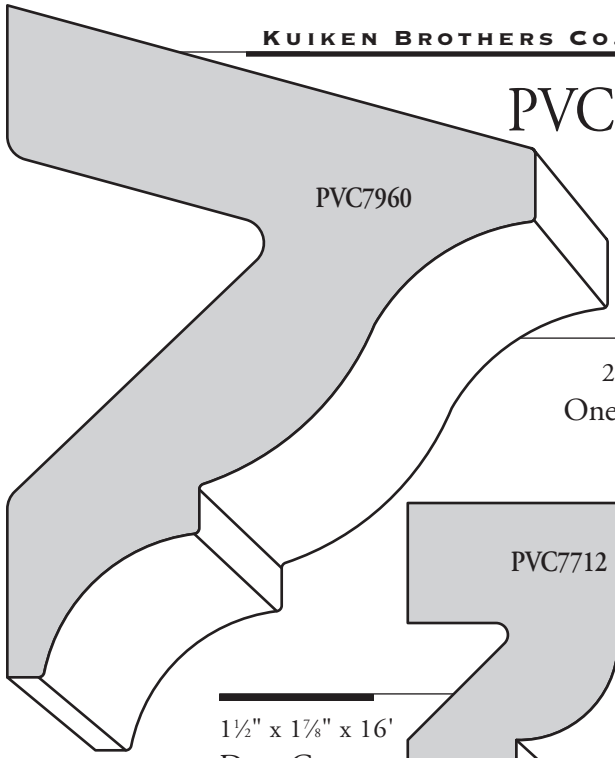

2¾" x 3½" x 12'
One Piece Crown

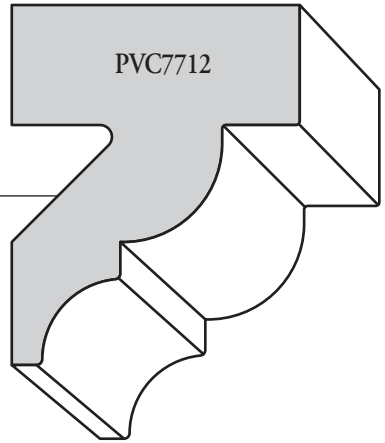

1½" x 1⅞" x 16'
Deco Crown

PVC Band Profile

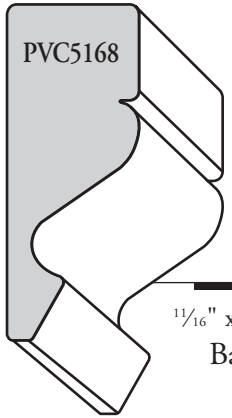

1¹⁄₁₆" x 1¾" x 16'
Band/Panel

PVC Bed

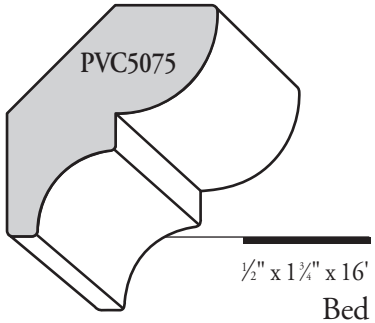

½" x 1¾" x 16'
Bed

PVC Baluster

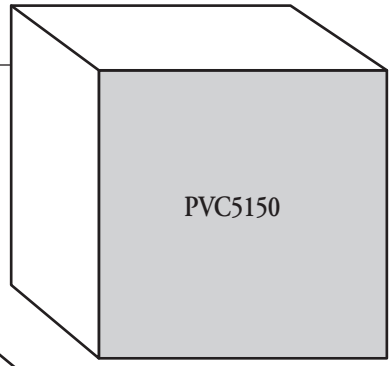

1½" x 1½" x 12'
Baluster

PVC Cove

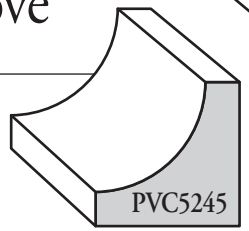

¾" x ¾" x 16'
Scotia Cove

PVC Casing

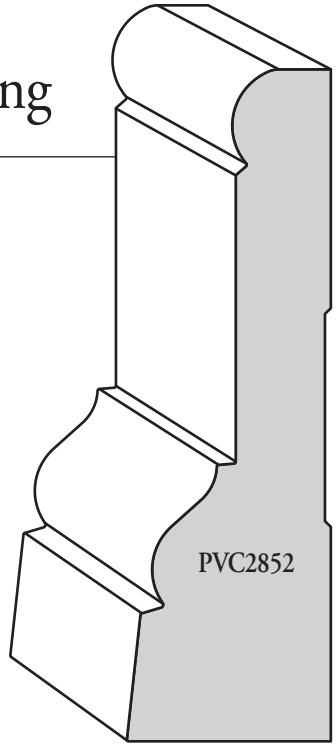

1 1/16" x 3½" x 16'
Adams Casing

PVC Base Cap

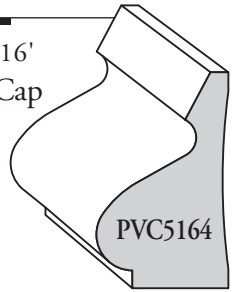

11/16" x 1⅛" x 16'
Panel/Base Cap

PVC Brick

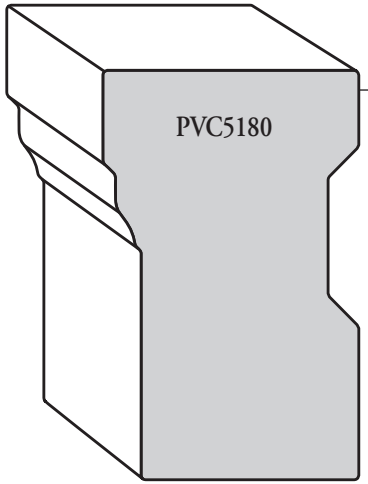

1¼" x 2" x 17'
Brick

PVC Back Band

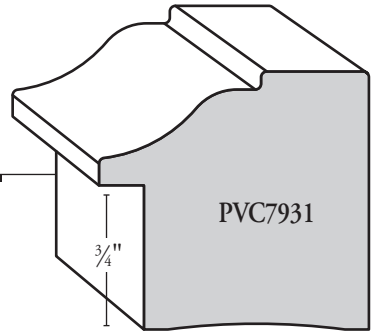

1⅜" x 1 3/16" x 16'
Back Band

PVC Drip Cap

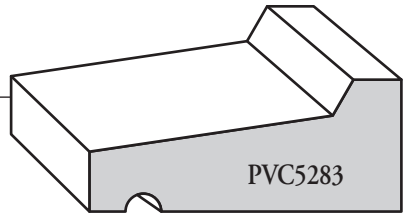

11/16" x 1 11/16" x 16'
Drip Cap

PVC Quarter Round

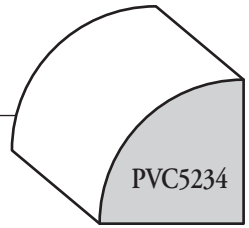

¾" x ¾" x 16'
Quarter Round

PVC Sill Nosing

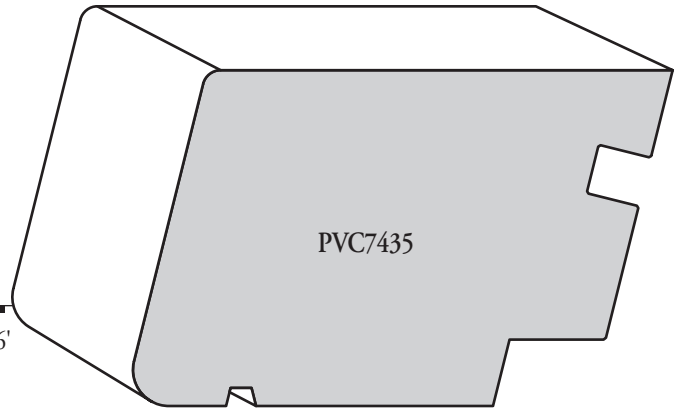

1¾" x 2 13/16" x 16'
Historic Sill

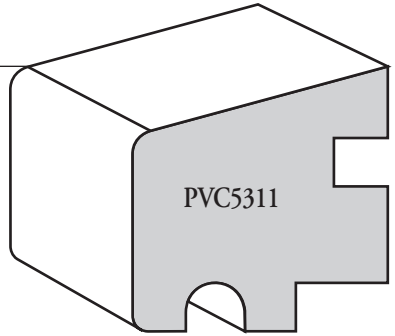

1½" x 1¼" x 16'
Sill Nosing

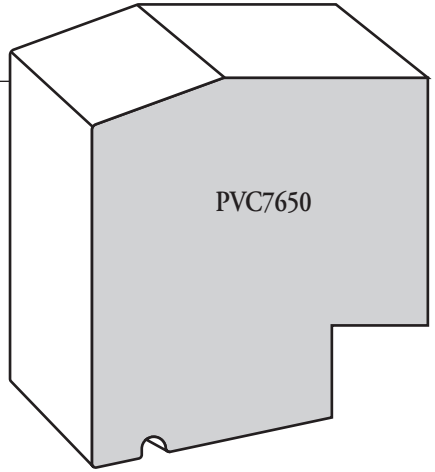

2" x 1¾" x 16'
Large Historic Sill

PVC Replacement Sill

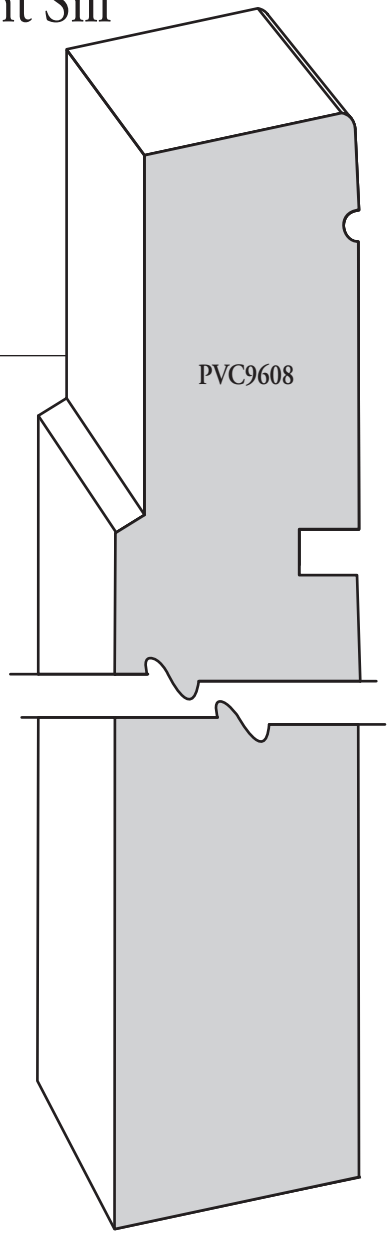

1¼" x 7 ¼" x 10'
Replacement Sill

Tongue & Groove Beaded Wainscot or Ceiling

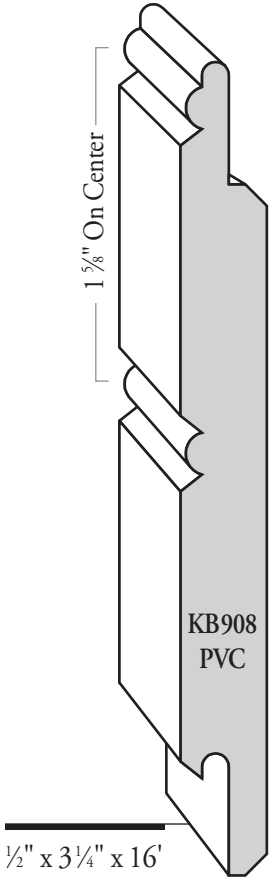

½" x 3¼" x 16'
(½"x 4" Nominal)

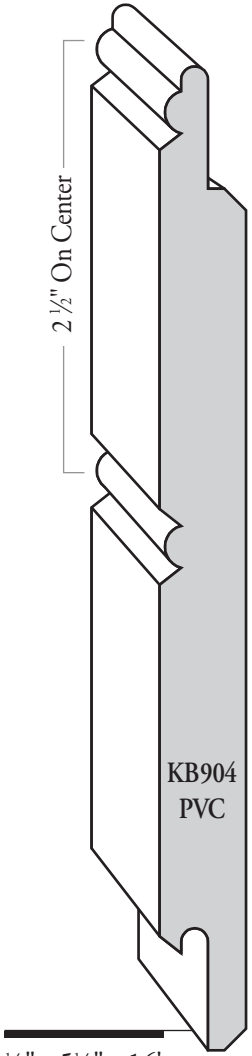

½" x 5⅛" x 16'
(½" x 6" Nominal)

Reversible Tongue & Groove Beaded Wainscot

½" x 7¼" x 16' (½"x 8"x16' Nominal)

Standard Bead Side

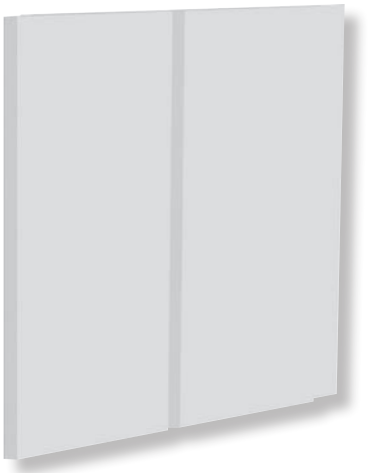

V-Groove Side

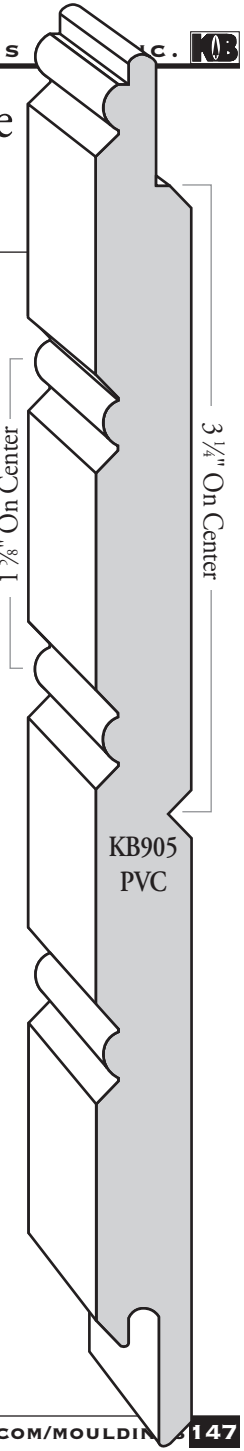

Reversible Tongue & Groove / Nickel Gap Paneling

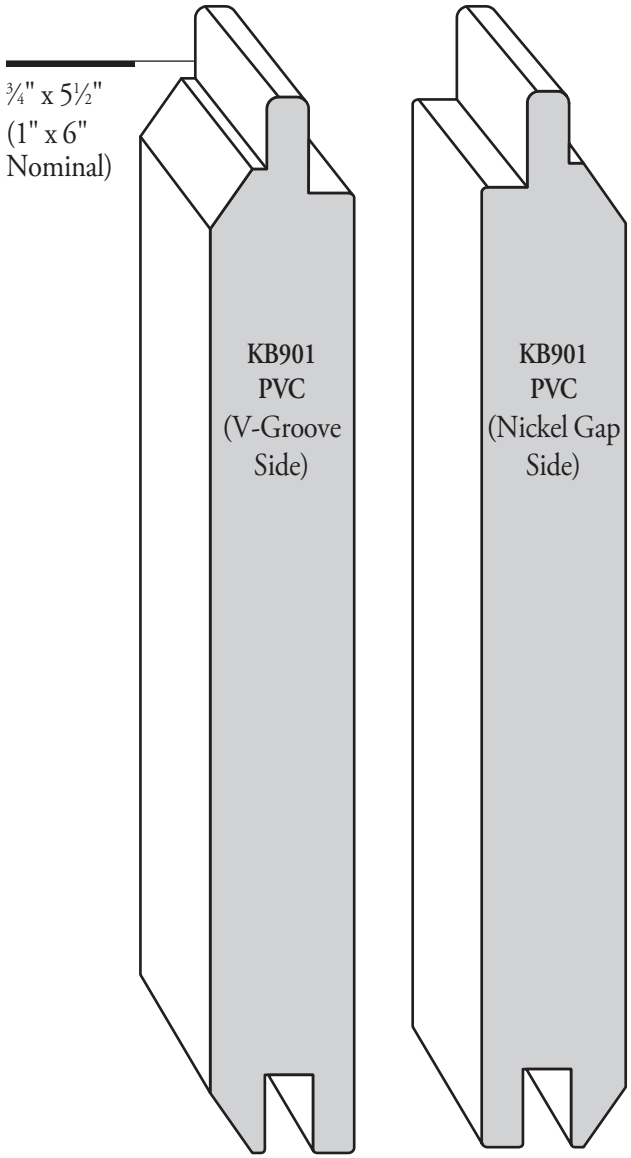

Tongue & Groove Beaded Wainscot and Nickel Gap / Shiplap

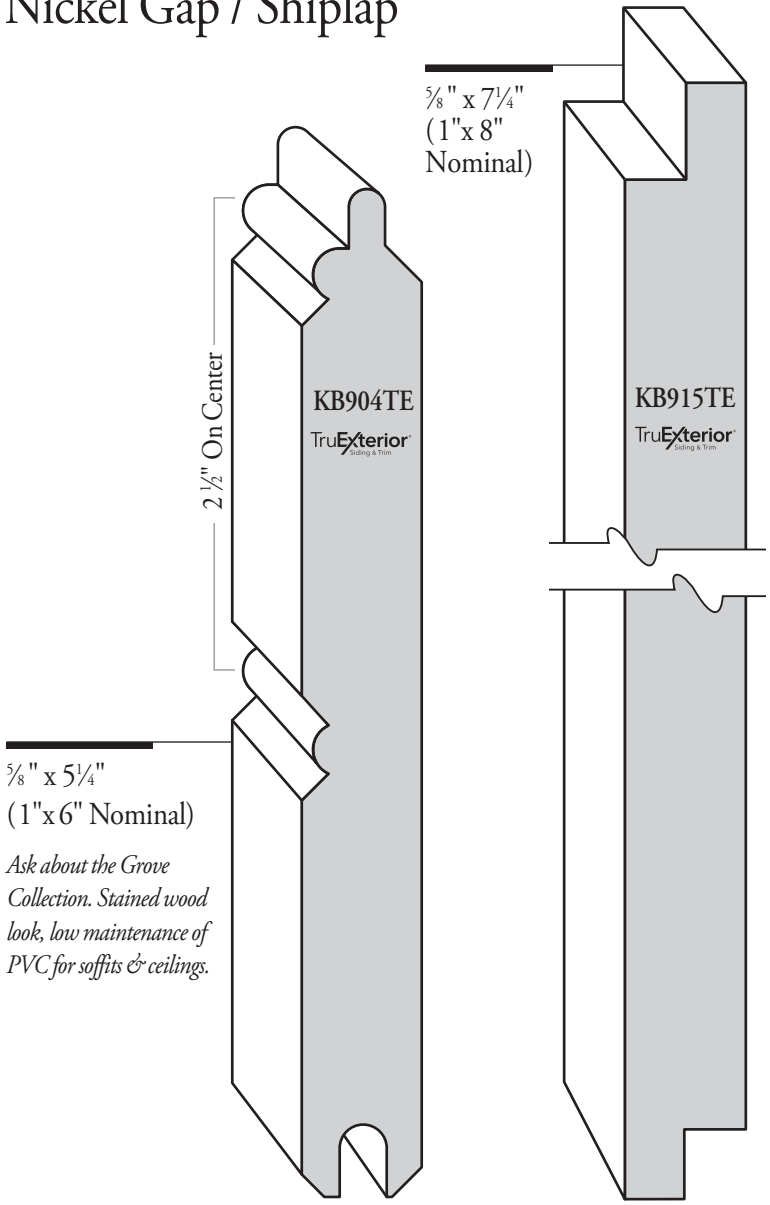

Ask about the Grove Collection. Stained wood look, low maintenance of PVC for soffits & ceilings.

KLEER™ PVC KLEER TRUEDGE

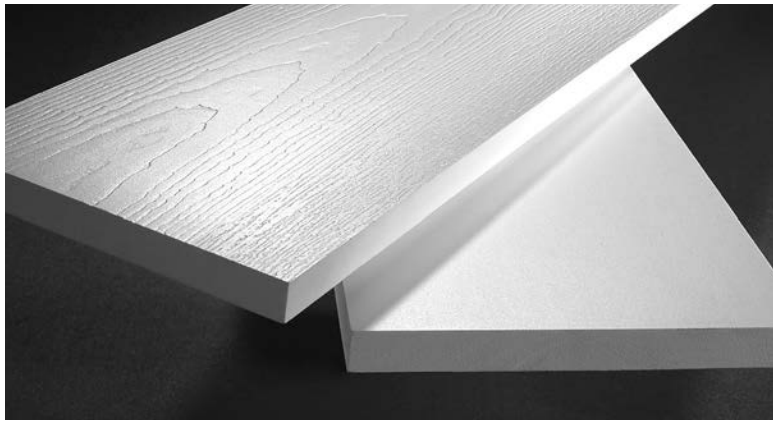

Kuiken Brothers entire inventory of Kleer PVC Trimboards feature their innovative TruEDGE technology, a sealed edge which provides sharper cleaner edges that resist dust and dirt.

COLLATED CORTEX HIDDEN FASTENING FOR KLEER PVC TRIM

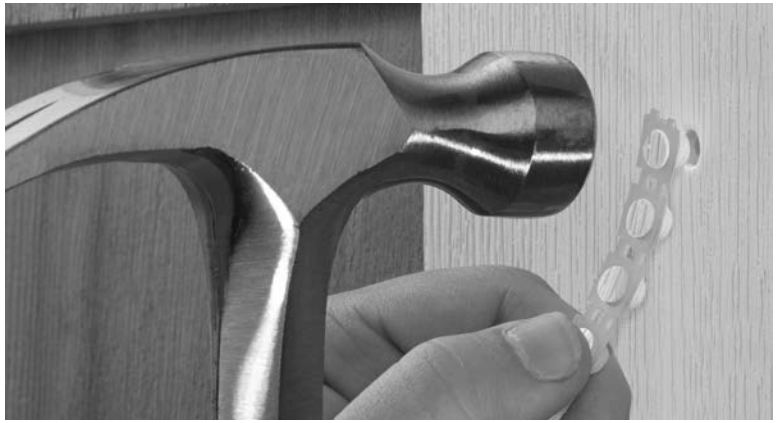

The Cortex Hidden Fastening System is the fastest, easiest way to hide fasteners in Kleer PVC Trim Boards. No more caulking, sanding or painting PVC trim! Available in a collated strip, minimizing handling, saving time on install.

KLEERWrap™ CELLULAR PVC POST WRAP

The easiest, fastest, most cost effective way to improve the appearance and durability of exterior posts. Backed by a lifetime warranty against splintering, rotting, delaminating or excessive swelling.

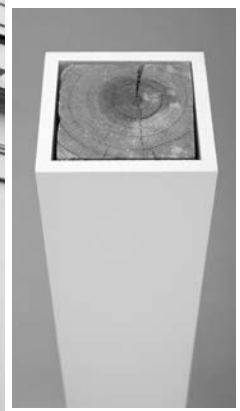

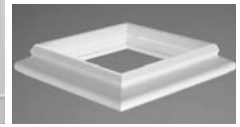

Manufactured from Kleer cellular PVC, KLEERWrap Post Wraps create the finished look of natural wood while being virtually impervious to moisture and insects. They are also backed by an industry-leading lifetime warranty against splintering, rotting, delaminating or swelling excessively due to moisture.

Each KleerWrap Post Wrap comes complete with a bed moulding set included. Additional moulding styles sold separately. **Learn more at www.KleerLumber.com**

KLEERWrap Post Wrap
4" x 4" x 8'
4" x 4" x 10'
6" x 6" x 8'
6" x 6" x 10'
8" x 8" x 10'

IN STOCK

Kleer Preformed Outside Corners

5/4" x 4"

5/4" x 6"

In-Stock PVC Boards & Panels

KLEER Trim	KLEER Panels	KLEER Tongue & Groove Wainscot
(Reversible)	*(Reversible)*	*(Smooth Only)*
18' lengths	4' x 8' x 1/4"	1/2" x 4" x 16'
Nominal Sizes Listed	4' x 8' x 3/8"	1/2" x 6" x 16'
1" x 4" 5/4" x 4"	4' x 8' x 1/2"	
1" x 6" 5/4" x 6"	4' x 10' x 1/2"	**KLEER Preformed Corners**
1" x 8" 5/4" x 8"	4' x 8' x 3/4"	*(Smooth Only)*
1" x 10" 5/4" x 10"	4' x 10' x 3/4"	5/4" x 4" - 20'
1" x 12" 5/4" x 12"	4' x 10' x 1"	5/4" x 6" - 20'
	KLEER Beaded Panel	
	4' x 8' x 1/2"	

PATTERN & STOCK BOARDS

Shiplap & Nickel Gap

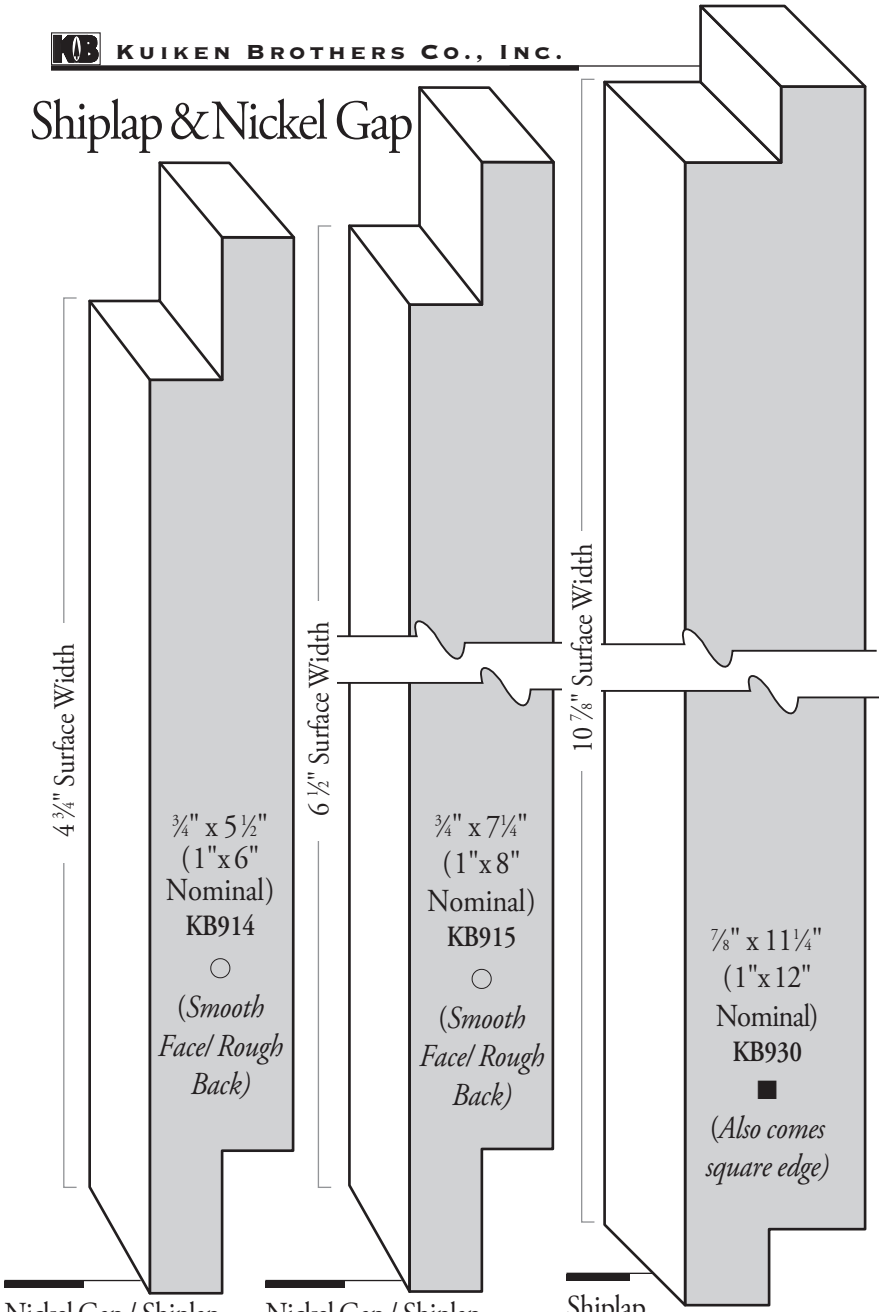

Nickel Gap / Shiplap

Nickel Gap / Shiplap

Shiplap
Barn Board

○ Primed FJ Pine | ■ Knotty Pine | □ Clear Yellow Pine | ✤ A&BTR Cedar | ☆ Knotty Cedar

Wainscot & Paneling

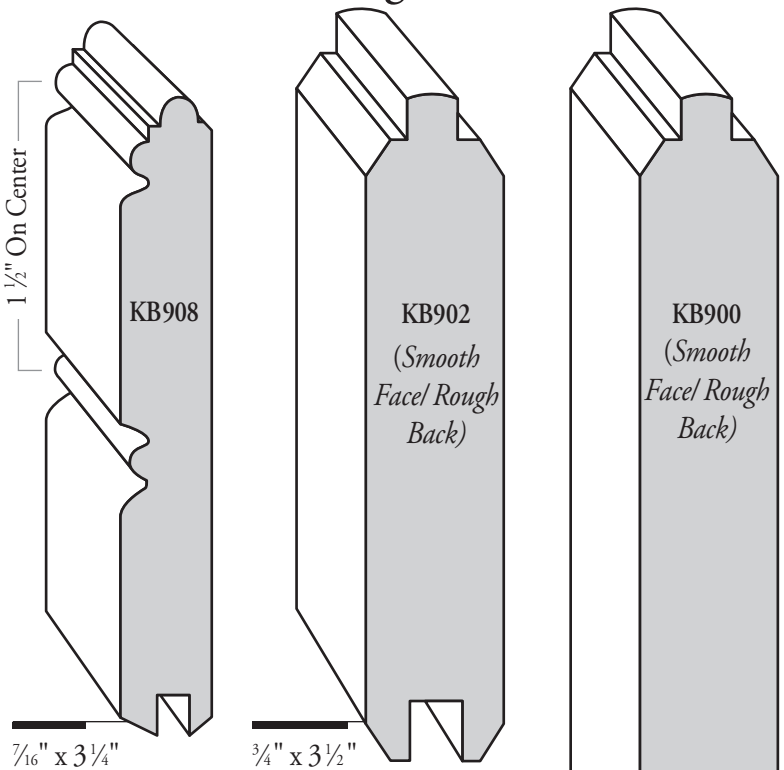

7/16" x 3¼"
(½"x 4" Nominal)
Tongue & Groove
Beaded Wainscot
or Ceiling
□ ○

For Kleer PVC Options, see page 146

¾" x 3½"
(1"x 4" Nominal)
Reversible "V" Joint
Tongue & Groove Paneling
✤

¾" x 5½"
(1"x 6" Nominal)
Reversible "V" Joint
Tongue & Groove Paneling
○ ✤ ☆

For Kleer PVC Options, see page 148

○ Primed FJ Pine | ■ Knotty Pine | □ Clear Yellow Pine | ✤ A&BTR Cedar | ☆ Knotty Cedar

Wainscot & Paneling

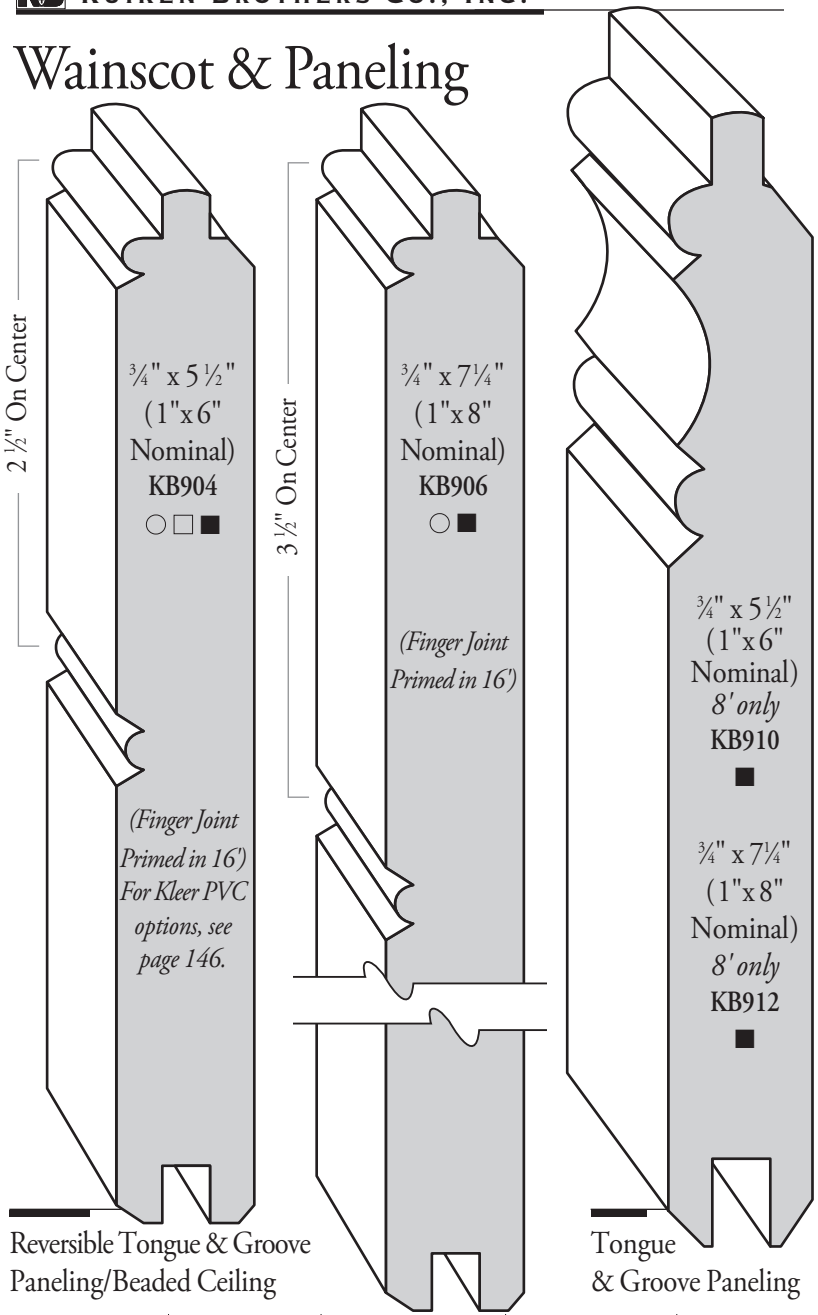

Reversible Tongue & Groove Paneling/Beaded Ceiling

Tongue & Groove Paneling

○ Primed FJ Pine | ■ Knotty Pine | □ Clear Yellow Pine | ✤ A&BTR Cedar | ☆ Knotty Cedar

Wainscot & Paneling

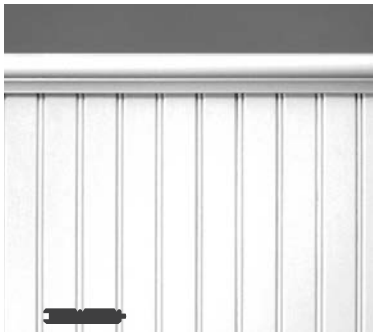

KB908 7/16" x 3¼" (½ x 4 Nominal)

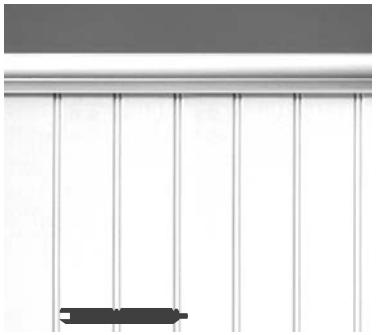

KB904 ¾" x 5½" (1 x 6 Nominal)

KB906 ¾" x 7¼" (1 x 8 Nominal)

KB914 ¾" x 5½" (1 x 6 Nominal)

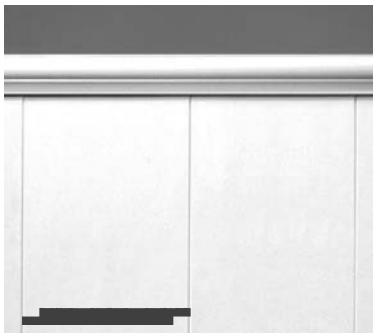

KB915 ¾" x 7¼" (1 x 8 Nominal)

KB900 ¾" x 5½" (1 x 6 Nominal)

○ Primed FJ Pine | ■ Knotty Pine | □ Clear Yellow Pine | ✤ A&BTR Cedar | ☆ Knotty Cedar

Plywood Beadboard

Available in 48" x 96"

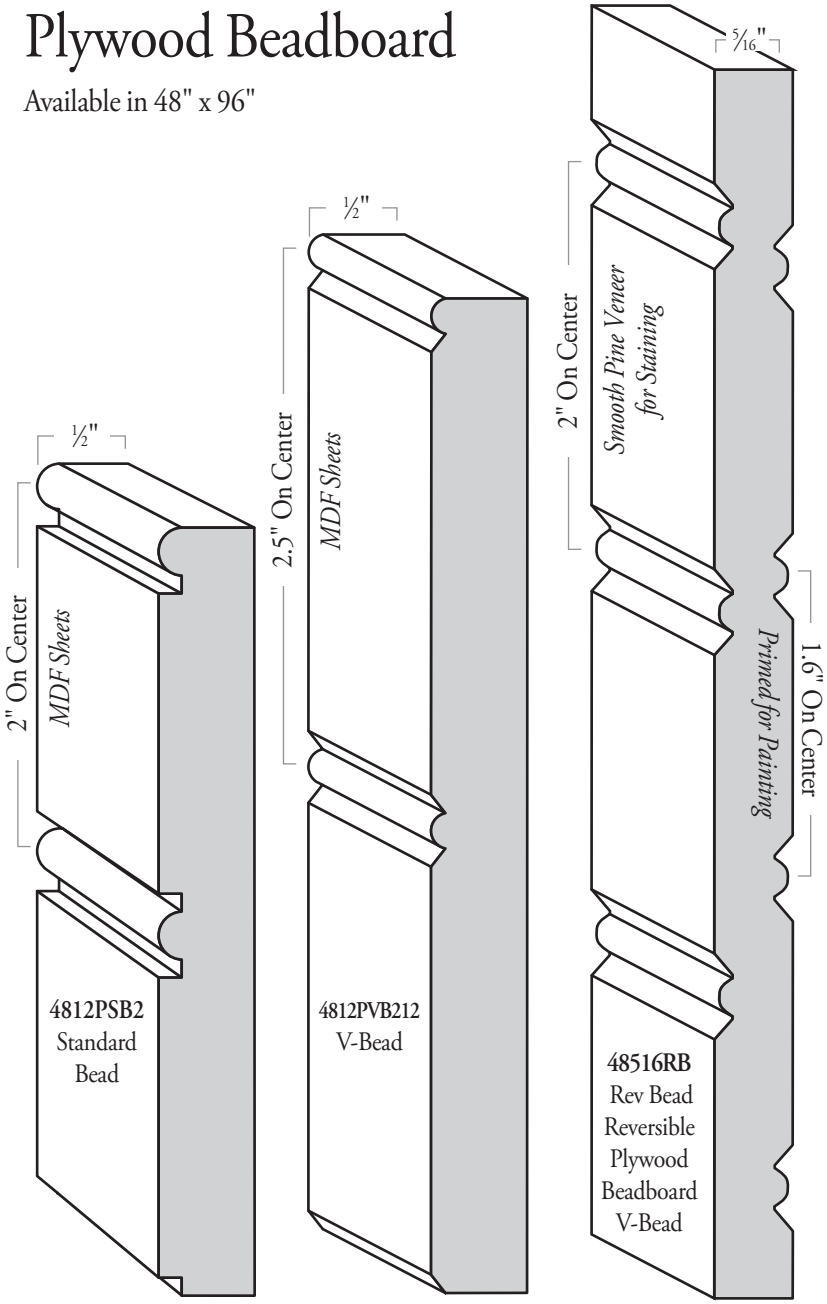

Beadboard, Wainscot Cap

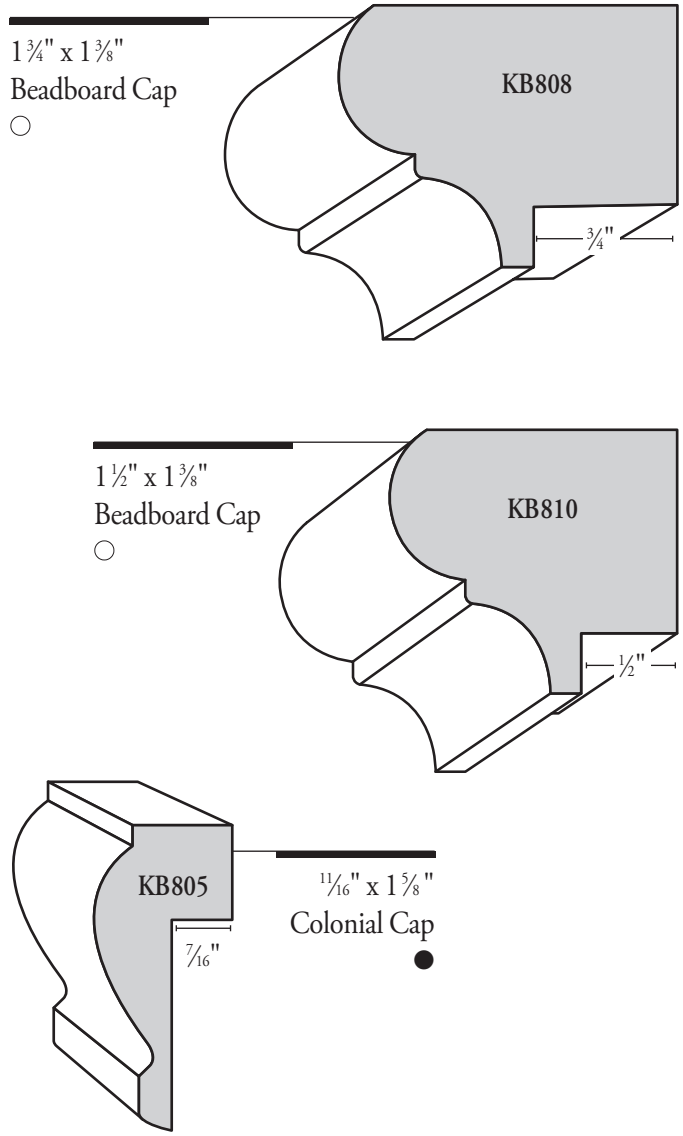

Clear Pine	Primed FJ Pine	Primed FJ Poplar	Lightweight Primed MDF

Siding

Many sidings are available with factory priming or pre-finished (special order only)

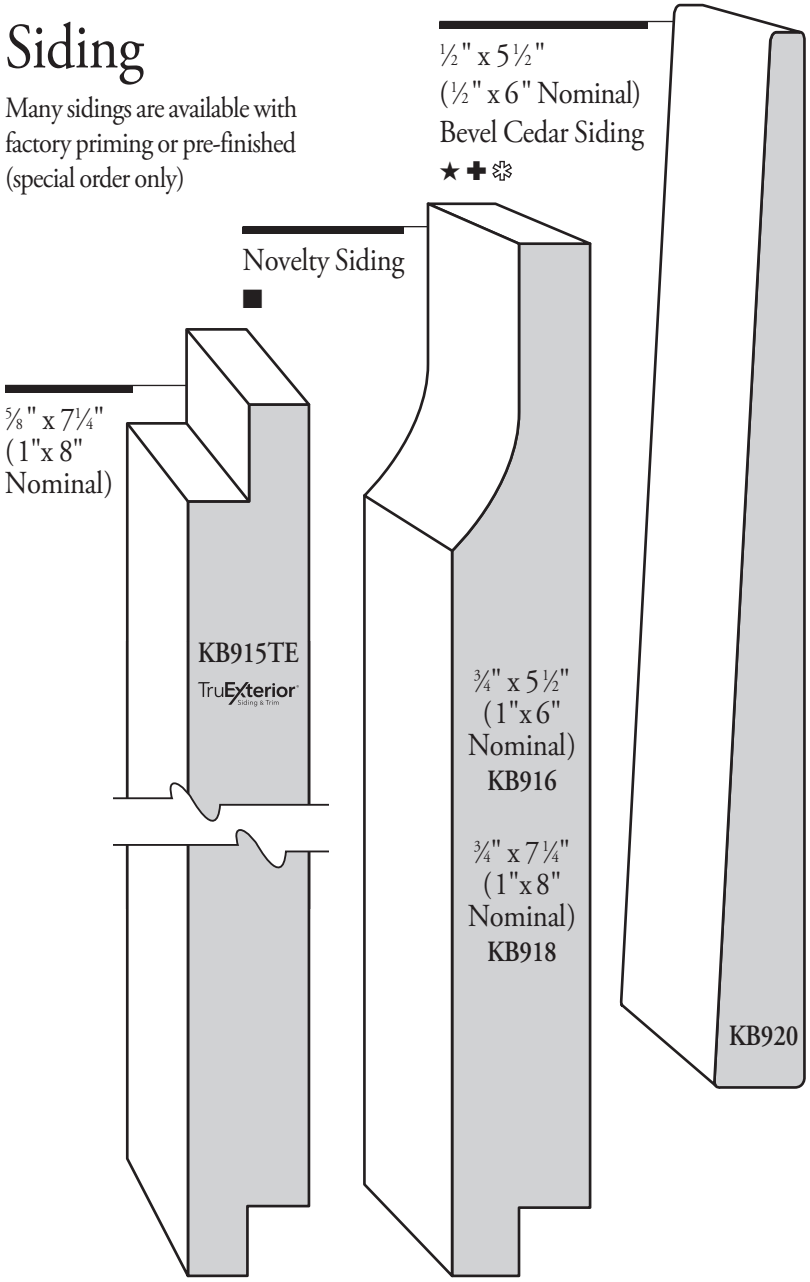

■ Knotty Pine	★ Clear Cedar	☆ Knotty Cedar	✚ FJ Primed Cedar	❄ Aeratis PVC

Siding

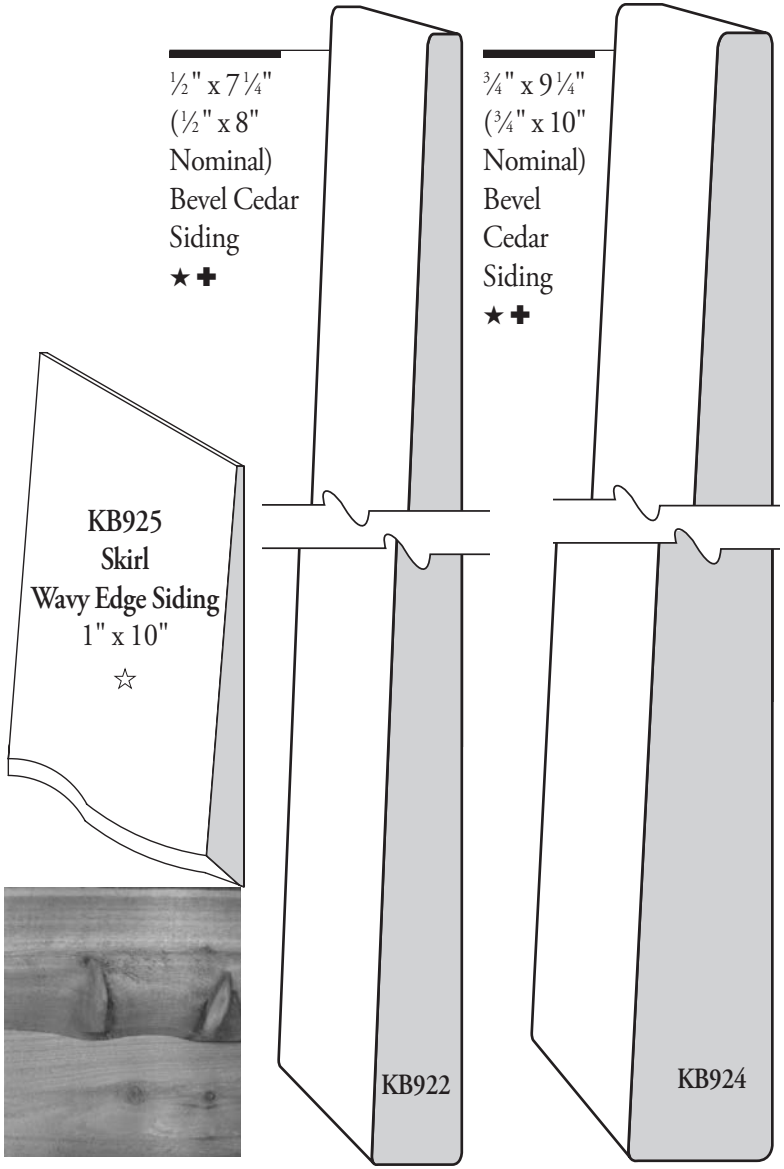

■ Knotty Pine	□ Southern Yellow Pine	★ Clear Cedar	☆ Knotty Cedar	✚ FJ Primed Cedar

Siding

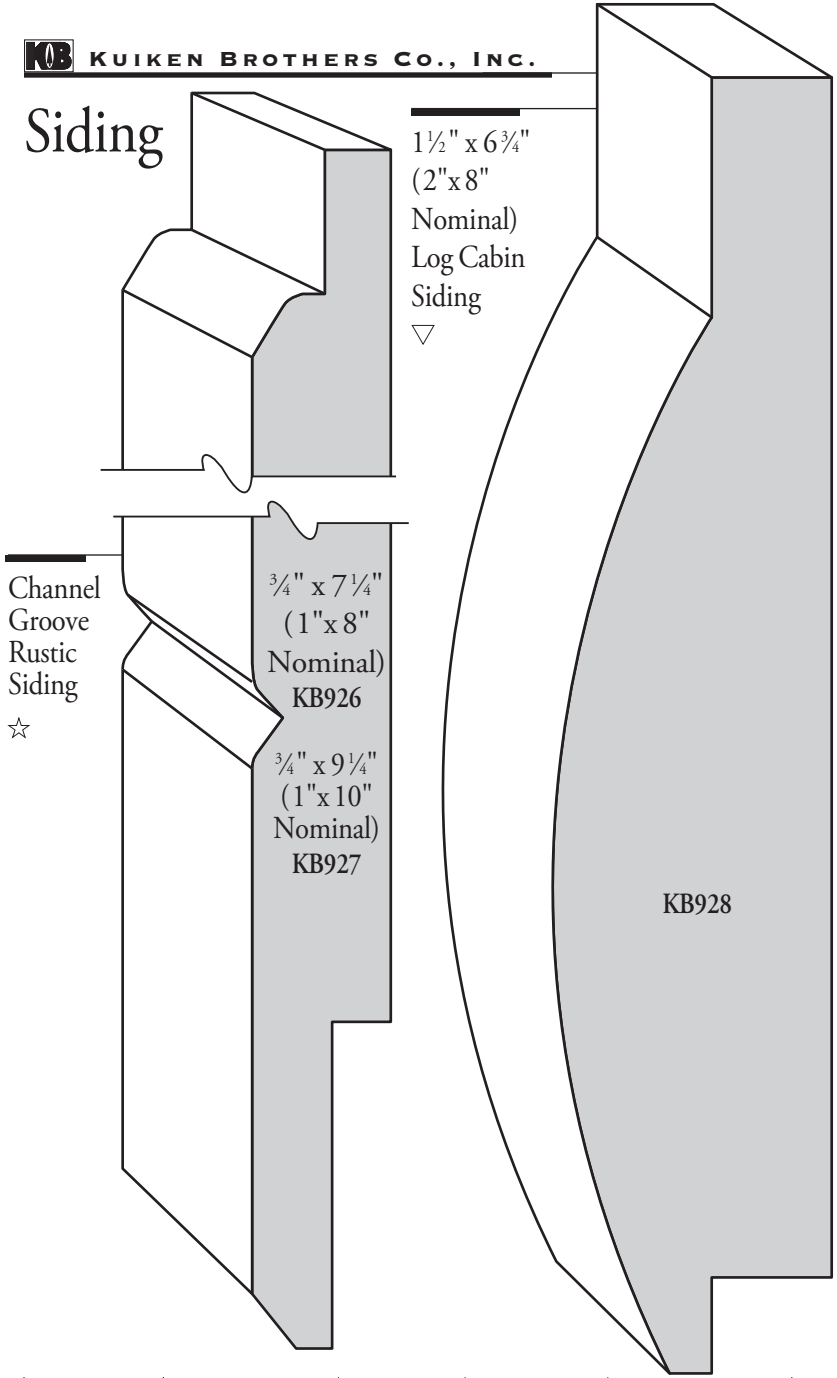

■ Knotty Pine	□ Southern Yellow Pine	★ Clear Cedar	☆ Knotty Cedar	▽ Std & Btr. Spruce

Siding & Roof Deck

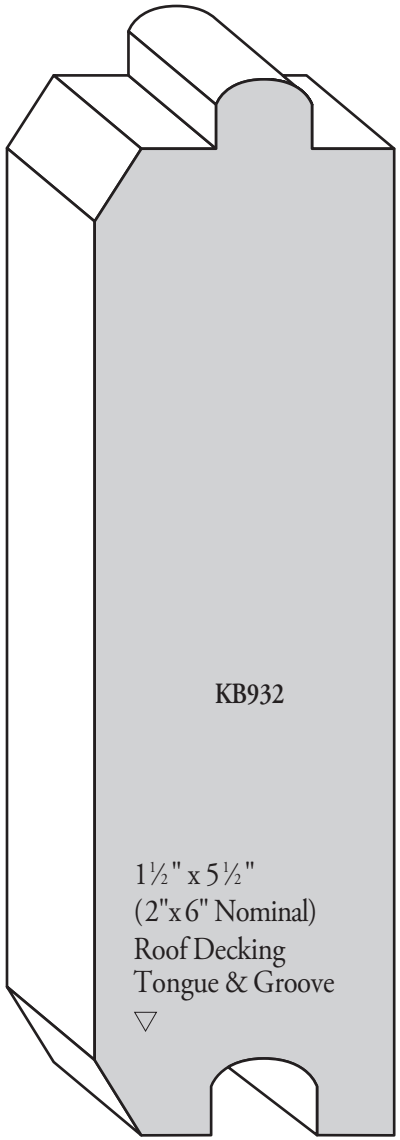

■ Knotty Pine	□ Southern Yellow Pine	★ Clear Cedar	▽ Std & Btr. Spruce	✚ FJ Primed Cedar

Flooring

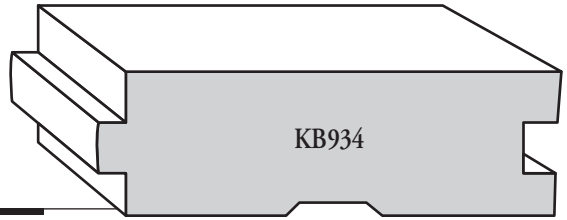

¾" x 2¼" (1" x 3" Nominal)
Tongue & Groove Yellow Pine
Flooring
□

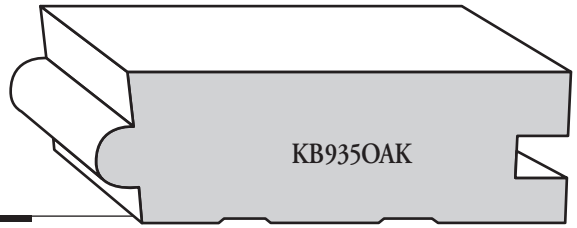

¾" x 2¼" (1" x 3" Nominal)
Tongue & Groove Oak Flooring
▲
– Select Red

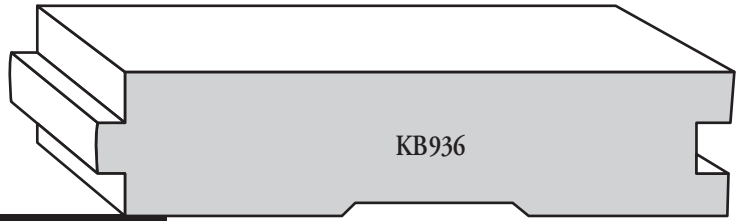

¾" x 3½" (1" x 4" Nominal) Tongue & Groove Flooring
□ ❖

□ Clear Yellow Pine	❖ Clear Fir	◆ Mahogany	▲ Oak

Flooring & Stepping

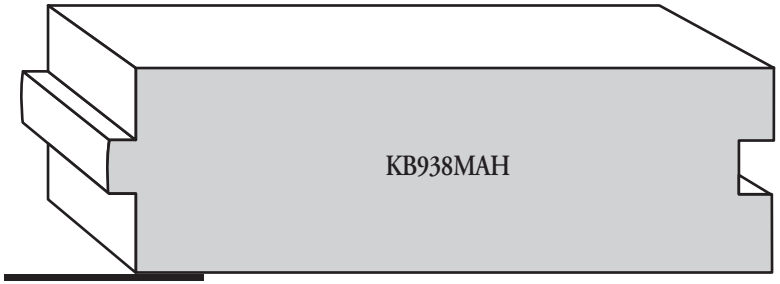

1 1/16" x 3½" (5/4" x 4" Nominal)
Tongue & Groove Flooring
◆ (Meranti)

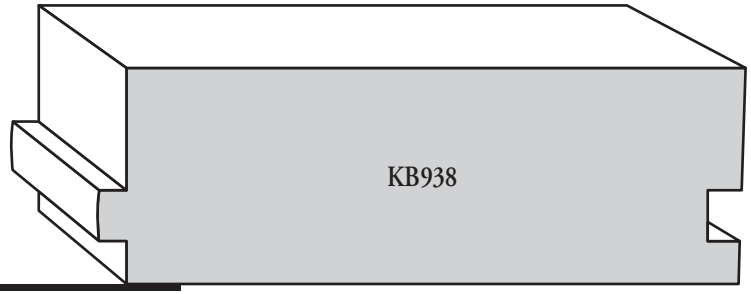

1 1/16" x 3½" (5/4" x 4" Nominal)
Tongue & Groove Flooring
❖

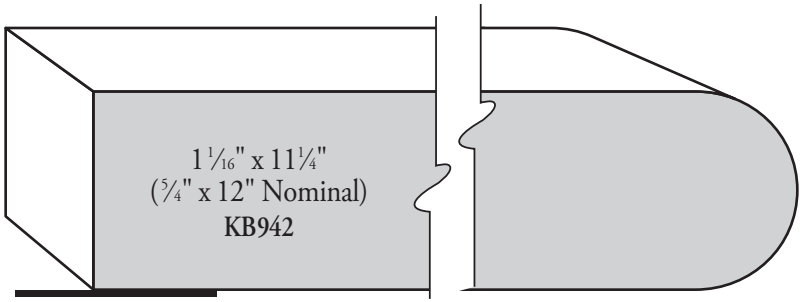

Stepping
□ ▲ (▲ 5/4" x 12" – 4′ or 6′ Only)

□ Clear Yellow Pine	❖ Clear Fir	◆ Mahogany	▲ Oak

Standard Board Nominal Size Stock Chart

Most standard boards are available in clear pine, knotty pine, primed pine, poplar, finger joint poplar, oak, cherry, mahogany, clear cedar and maple. Boards are generally ordered by their nominal size. The following chart depicts the nominal size and actual size.

Nominal Sizes	Actual Sizes	Windsor ONE+ Protected	TruExterior Poly-ash/ Kleer PVC	White Pine D & BTR	White Pine C & BTR	White Pine #2 COM	White Pine F/J E/G Decorative	Cherry	Poplar, Red Oak, Mahogany	Maple
1/2" x 2"	1/2" x 1-1/2"			■						
1/2" x 3"	1/2" x 2-1/2"			■						
1/2" x 4"	1/2" x 3-1/2"			■		■				
1/2" x 6"	1/2" x 5-1/2"			■		■				
1/2" x 8"	1/2" x 7-1/4"			■		■				
1" x 2"	3/4" x 1-1/2"	■			■	■				
1" x 3"	3/4" x 2-1/2"	■			■	■				
1" x 4"	3/4" x 3-1/2"	■	■		■	■		■	■	■
1" x 6"	3/4" x 5-1/2"	■	■		■	■		■	■	■
1" x 8"	3/4" x 7-1/4"	■	■		■	■		■	■	■
1" x 10"	3/4" x 9-1/4"	■	■		■	■			■	■
1" x 12"	3/4" x 11-1/4"	■	■		■	■			■	■
1" x 14"	3/4" x 13-1/4"						■			
1" x 18"	3/4" x 17-1/4"						■			
1" x 24"	3/4" x 23-1/4"						■			
5/4" x 3"	1-1/8" x 2-1/2"**	■								
5/4" x 4"	1-1/8" x 3-1/2"**	■	■		■	■			■	■
5/4" x 6"	1-1/8" x 5-1/2"**	■	■		■	■			■	■
5/4" x 8"	1-1/8" x 7-1/4"**	■	■		■	■			■	■
5/4" x 10"	1-1/8" x 9-1/4"**	■	■			■			■	
5/4" x 12"	1-1/8" x 11-1/4"**	■	■		■	■			■	
8/4" x 12"	1-13/16" x 11-1/4"**					■				

**Hardwoods (Cherry, Mahogany, Maple) are FAS Grade* ***Slight variation between manufacturers may occur*

Stock Finished Plywood & Panel Chart

Kuiken Brothers stocks a wide range of plywood and sheet good products for interior & exterior applications, including hardwoods, sanded plywoods, Fiberboard/MDF, shelving, wiggle board and more. The following chart shows our in-stock options. Location may vary, please call in advance.

Size	Type	1/8"	1/4"	3/8"	5/16"	1/2"	5/8"	3/4"	1"	1-1/4"
	HARDWOOD PLYWOOD									
4' x 8'	Cherry Plywood		■			■		■		
4' x 8'	Oak (Red) Plywood		■			■		■		
4' x 8'	Oak (White) Plywood					■		■		
4' x 8'	Sapele Mahogany Plywood		■			■		■		
4' x 8'	Maple Plywood		■			■		■		
4' x 8'	Natural Birch Plywood		■			■		■		
4' x 8'	Maple Plywood UV Finished 2 sides					■		■		
4' x 8'	Chinese Birch Plywood					■		■		
4' x 8'	Lauan Plywood	■ (2.7 MM)	■ (5.2 MM)							
	SANDED PLYWOOD									
4' x 8'	AC Grade Pine Plywood		■	■		■	■	■	■	
4' x 8'	AB Marine Grade Fir Plywood					■		■		
4' x 8'	MDO Plywood					■		■		
	FIBERBOARD/ MDF									
4' x 8'	Light Density Fiberboard		■			■		■	■	
4' x 10'	Light Density Fiberboard							■		
	BEADBOARD									
4' x 8'	Primed MDF Standard Beadboard 2" O.C.					■				
4' x 8'	Primed MDF V Beadboard 2-1/2" O.C.					■				
4' x 8'	Pine Plybead Panel 2" O.C.			■						
4' x 8'	ReversibleBead Panel 1.6" O.C. Primed Side			■ (5/16)						
4' x 8'	ReversibleBead Panel 2" O.C. Clear Side			■ (5/16)						
	SHELVING									
4' x 8'	White Melamine Good 2 Sides							■		
12" X 96"	White RediShelf							■		
16" x 96"	White RediShelf							■		
4' x 8'	Tempered Hardboard Panel	■	■ (3/16)							
4' x 8'	Tempered Pegboard Panel		■ (3/16)							
	PVC (KLEER)									
4' x 8'	Kleer PVC Panel		■	■		■		■		
4' x 10'	Kleer PVC Panel					■		■	■	
4' x 8'	Beaded 2" O.C. Kleer PVC Panel					■				
	MISCELLANEOUS									
4' x 8'	Wiggle Board 8' Tube (Column)			■						
8' x 4'	Wiggle Board 4' Tube (Barrel)			■						
4' x 8'	Aromatic Cedar Closet Lining		■							

MOULDING DESIGN GUIDE TO GO!

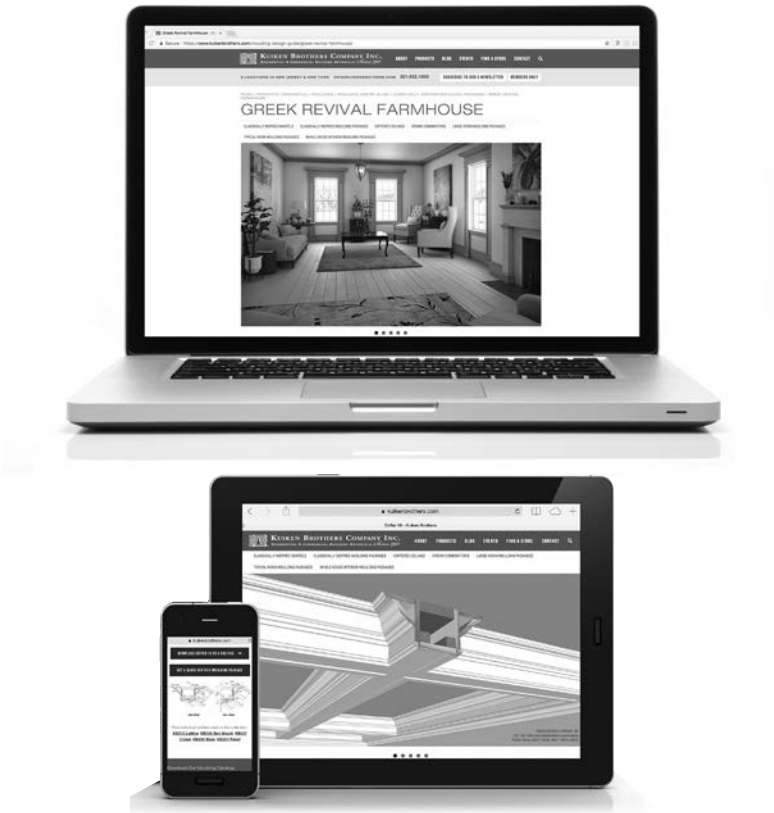

WWW.KUIKENBROTHERS.COM

DOWNLOAD MANTEL & ROOM MOULDING COMBINATIONS

For even more full room combinations, Visit **www.kuikenbrothers.com/mouldingdesignguide** to download all of the combinations shown in this catalog. Packages include historic designs from the Classical Moulding Collection as well as Craftsman and Colonial style packages designed with our traditional profiles. Available in PDF, DXF and DWG file types. Plus, these designs can easily be downloaded to your laptop or mobile device for jobsite client consultations.

MOULDING DESIGN GUIDE

The following pages feature full room moulding, mantel, coffered ceiling and door header combinations built with profiles from our in-stock moulding to help simplify the selection process. Choosing a crown moulding can be simple, but finding matching base and casings can be difficult and sometimes overwhelming.

To download complete CAD file blocks of these room and mantel combination details and to easily incorporate into your architectural details visit kuikenbrothers.com/mouldingdesignguide

CLASSICAL MOULDING

MOULDING DESIGN GUIDE

EARLY AMERICAN OFFICE

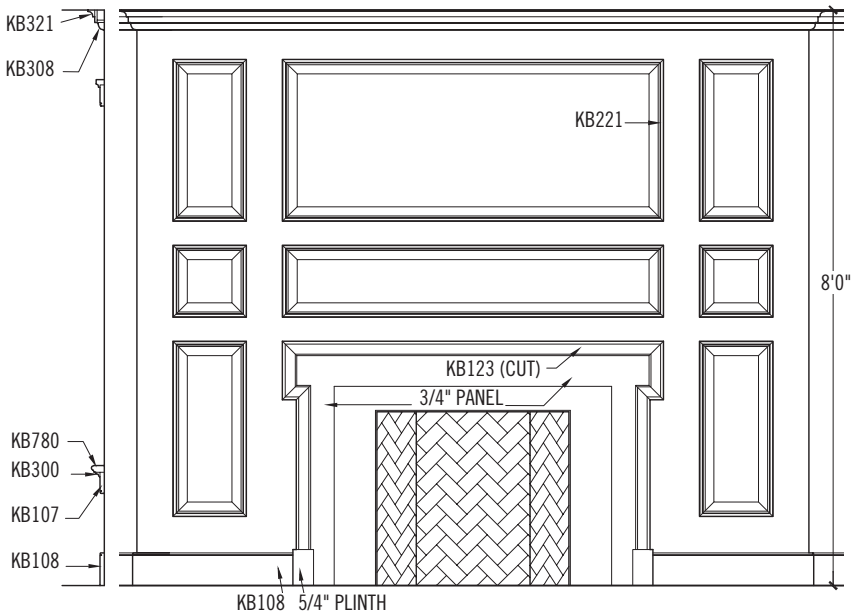

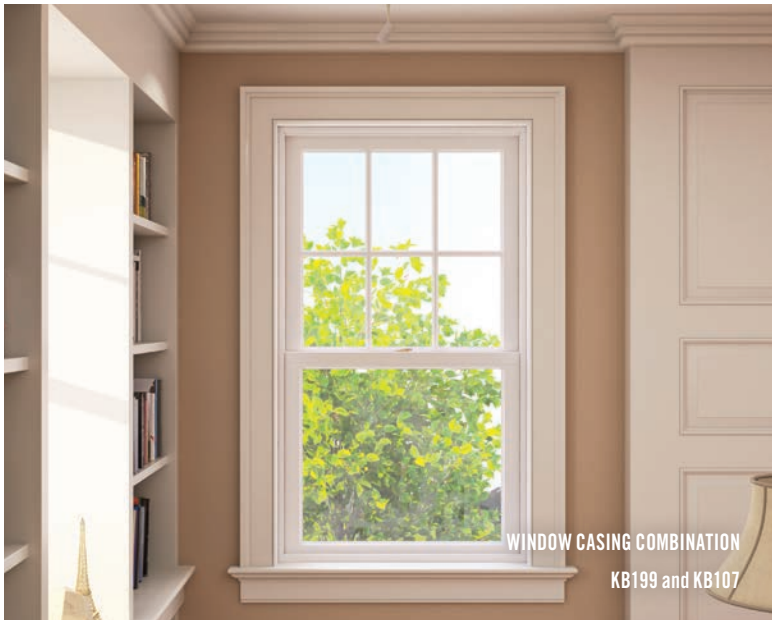

CLASSICAL MOULDING

MOULDING DESIGN GUIDE

GEORGIAN STUDY

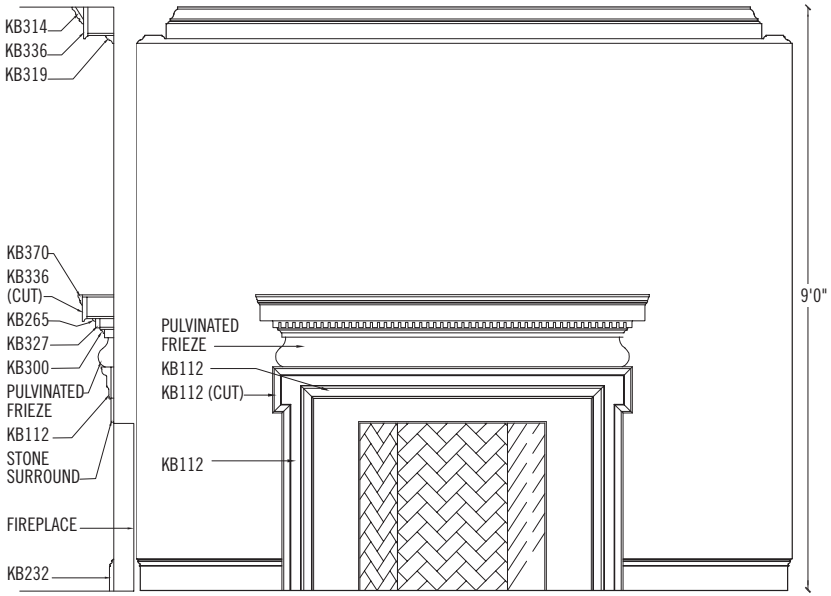

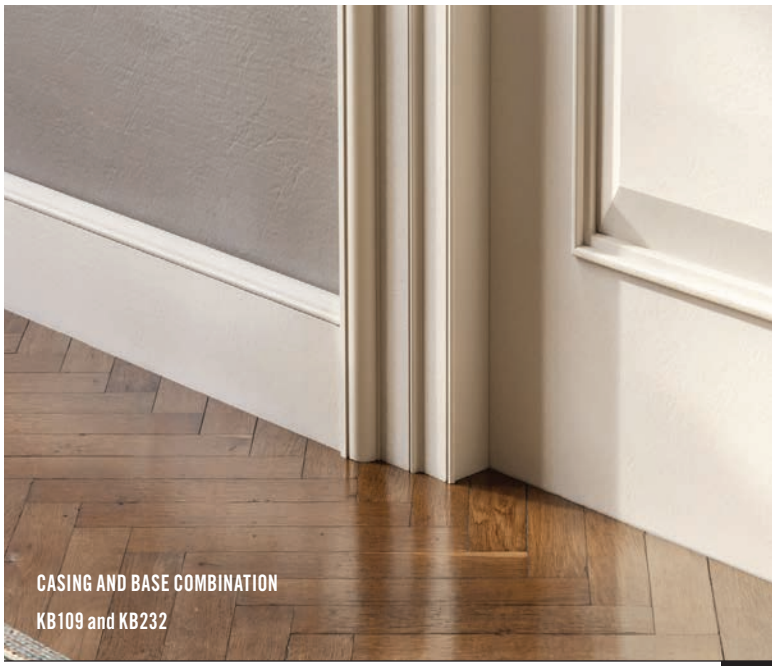

CASING AND BASE COMBINATION

KB109 and KB232

MOULDING DESIGN GUIDE

MODERN CRAFTSMAN ARTS & CRAFTS LIVING ROOM

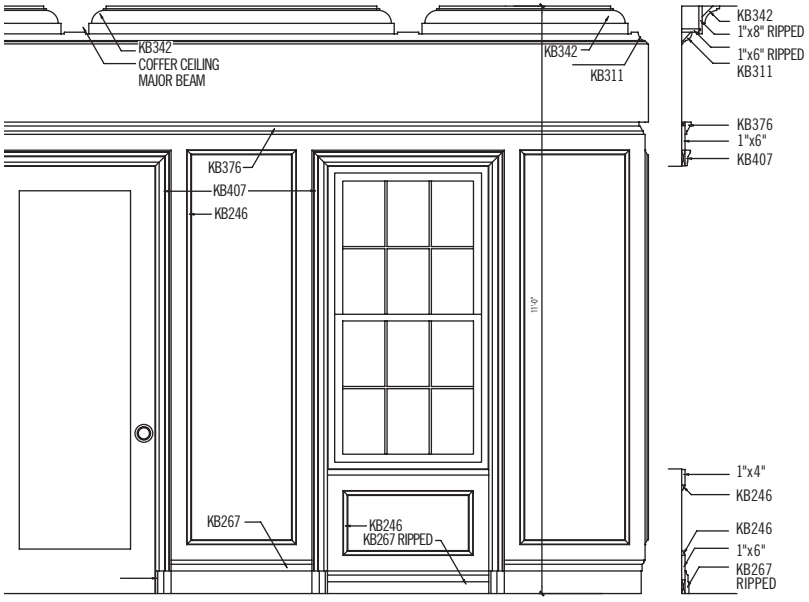

CLASSICAL MOULDING

MOULDING DESIGN GUIDE

GREEK REVIVAL FARM HOUSE

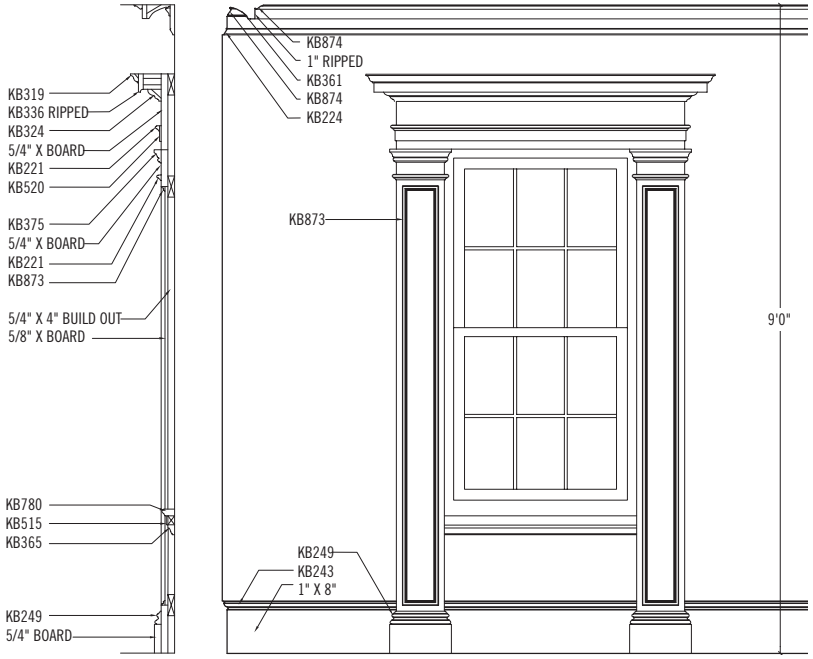

CLASSICAL MOULDING

MOULDING DESIGN GUIDE

MODERN CRAFTSMAN JUDGES PANEL

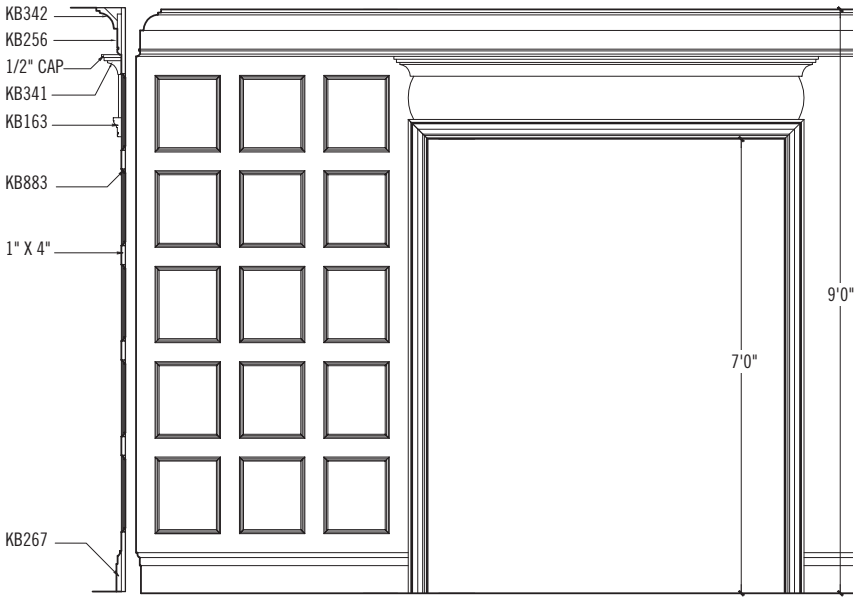

MOULDING DESIGN GUIDE

ARTS & CRAFTS COFFERED CEILING

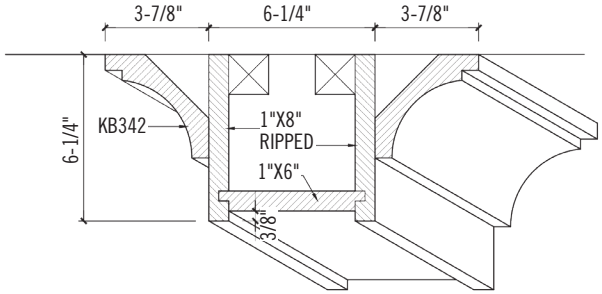

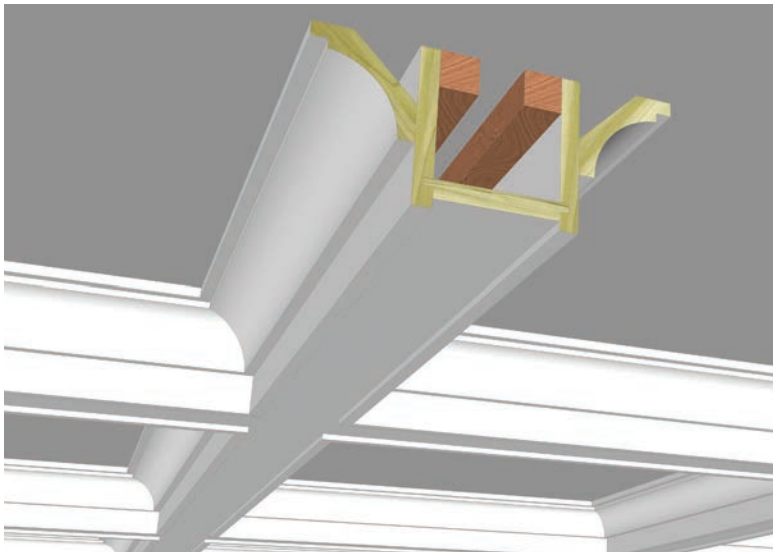

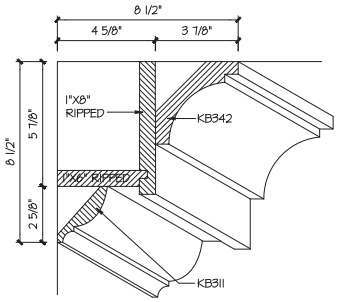

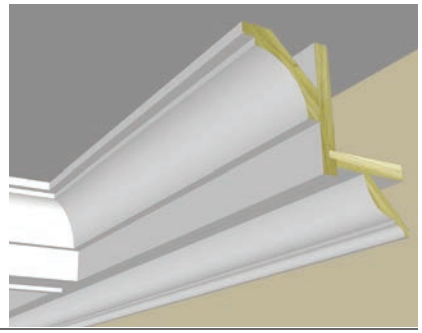

MOULDING DESIGN GUIDE

COFFERED CEILING #10

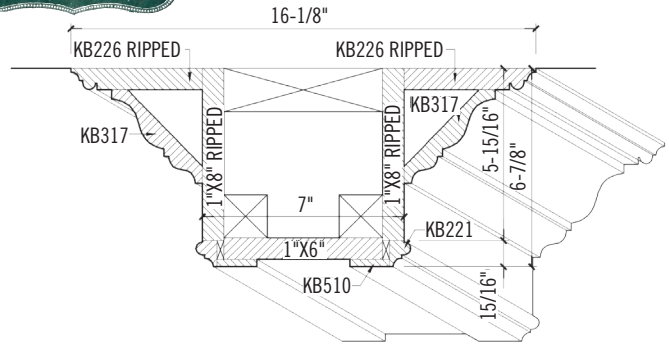

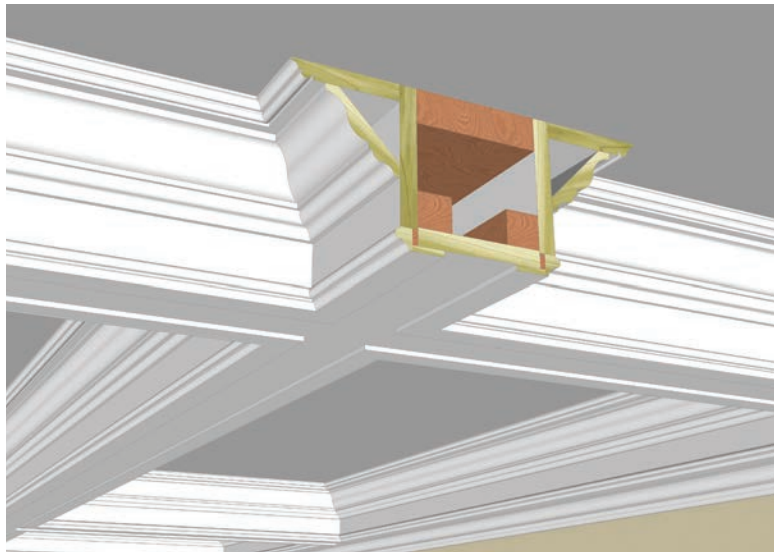

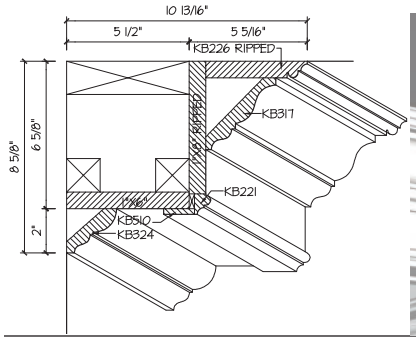

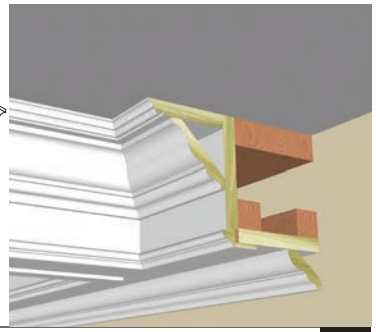

MOULDING DESIGN GUIDE

SIMPLE SHAKER STYLE COFFERED CEILING

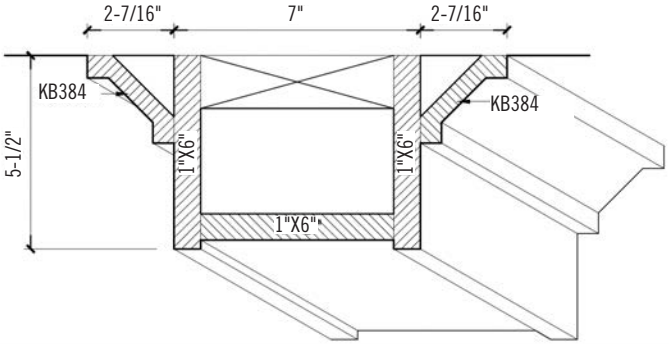

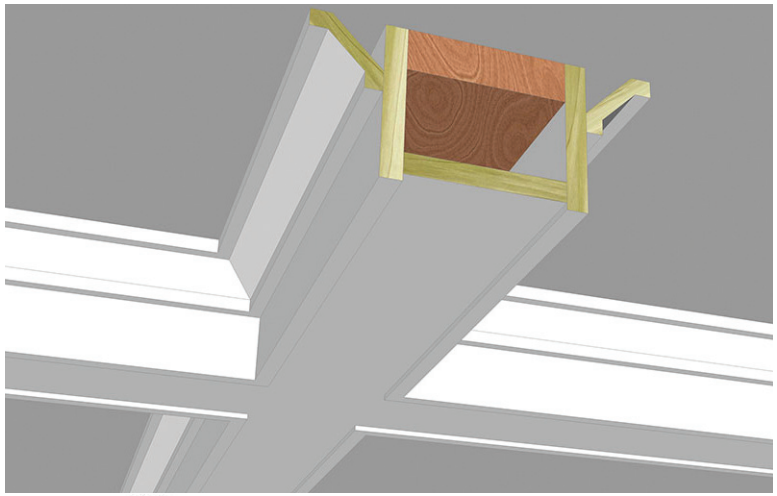

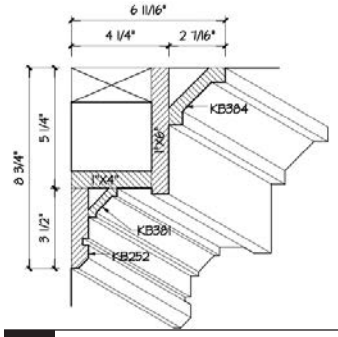

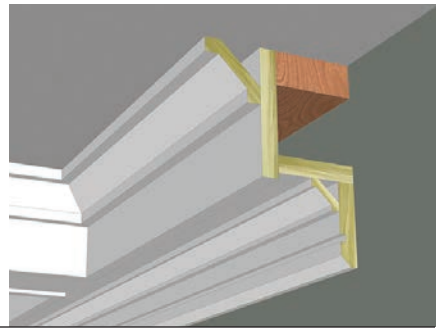

MOULDING DESIGN GUIDE

SHAKER CAP & BEAD ROOM

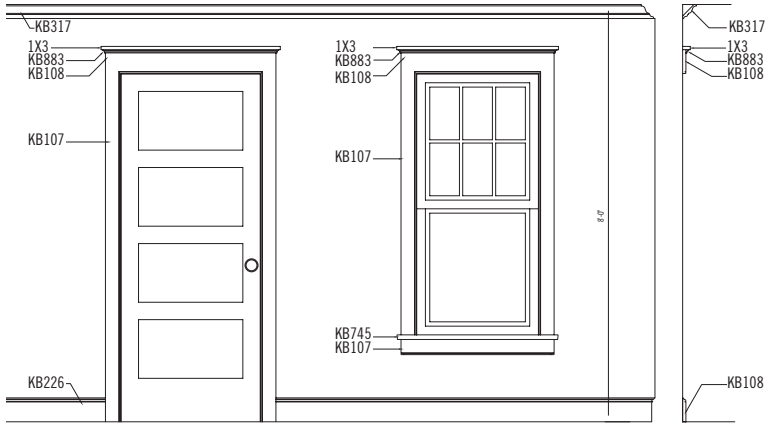

MOULDING DESIGN GUIDE

PANEL BULL ROOM

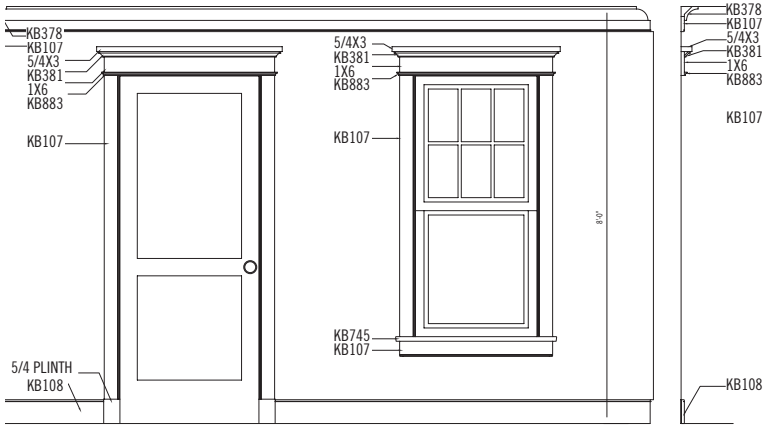

MOULDING DESIGN GUIDE

SIMPLE SOLID CROWN ROOM

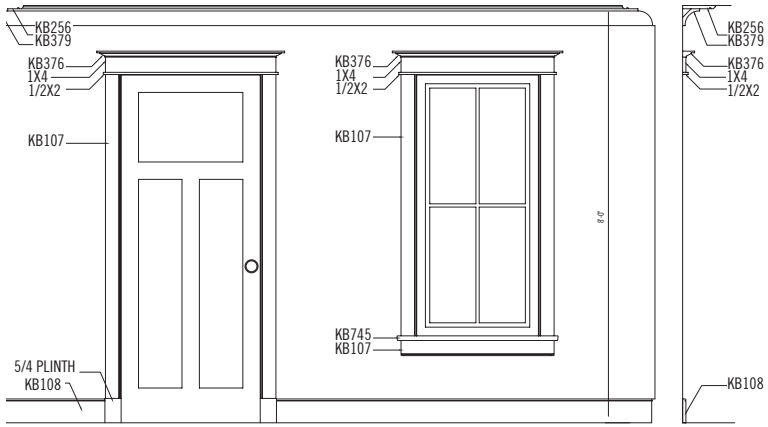

MOULDING DESIGN GUIDE

EARLY FEDERAL STYLE ROOM

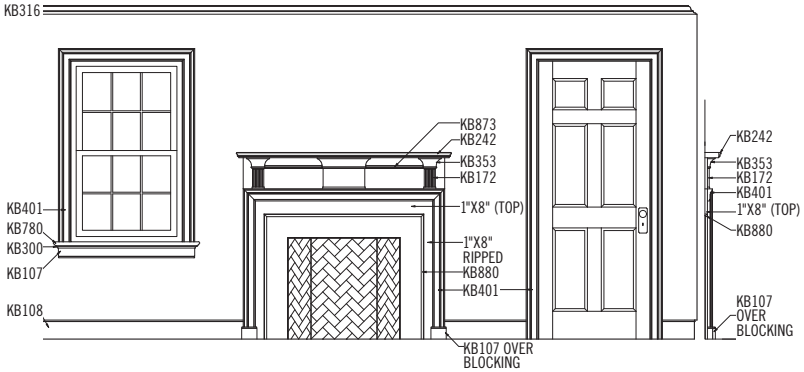

MOULDING DESIGN GUIDE

GREEK REVIVAL MOULDING PACKAGE

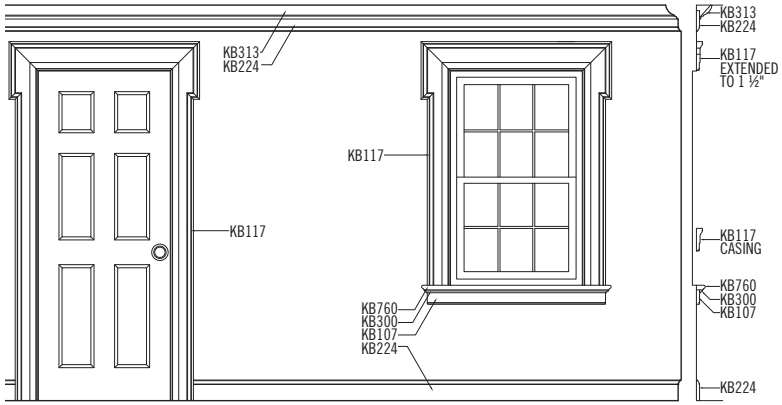

MOULDING DESIGN GUIDE

COLONIAL REVIVAL MOULDING PACKAGE

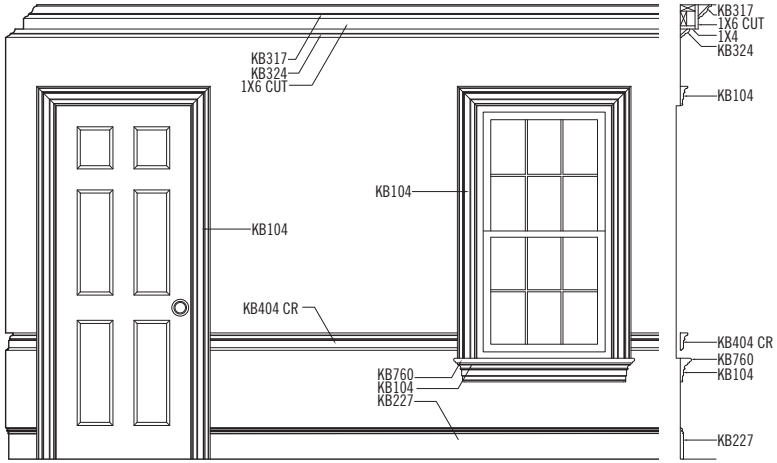

CLASSICAL MOULDING

MOULDING DESIGN GUIDE

FEDERAL MANTEL

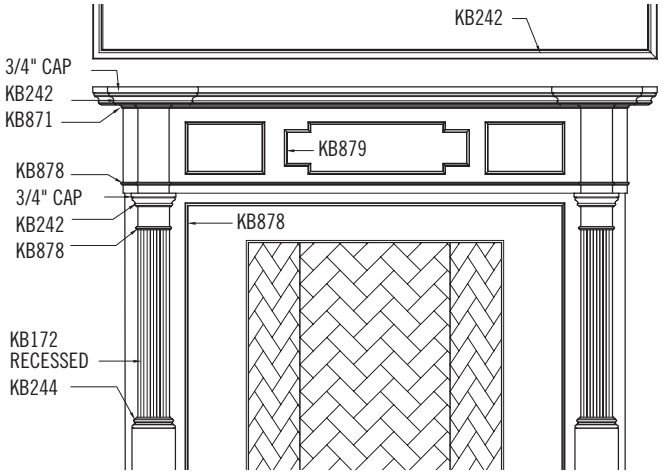

CLASSICAL MOULDING

MOULDING DESIGN GUIDE

GEORGIAN MANTEL

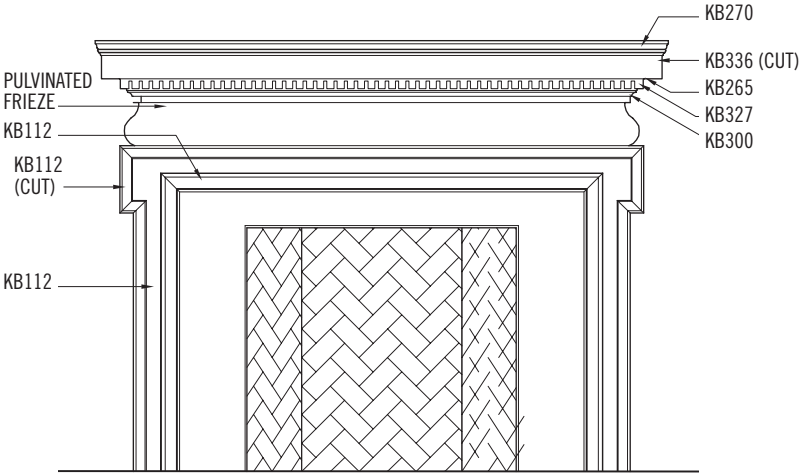

CLASSICAL MOULDING

MOULDING DESIGN GUIDE

PALLADIAN WINDOW

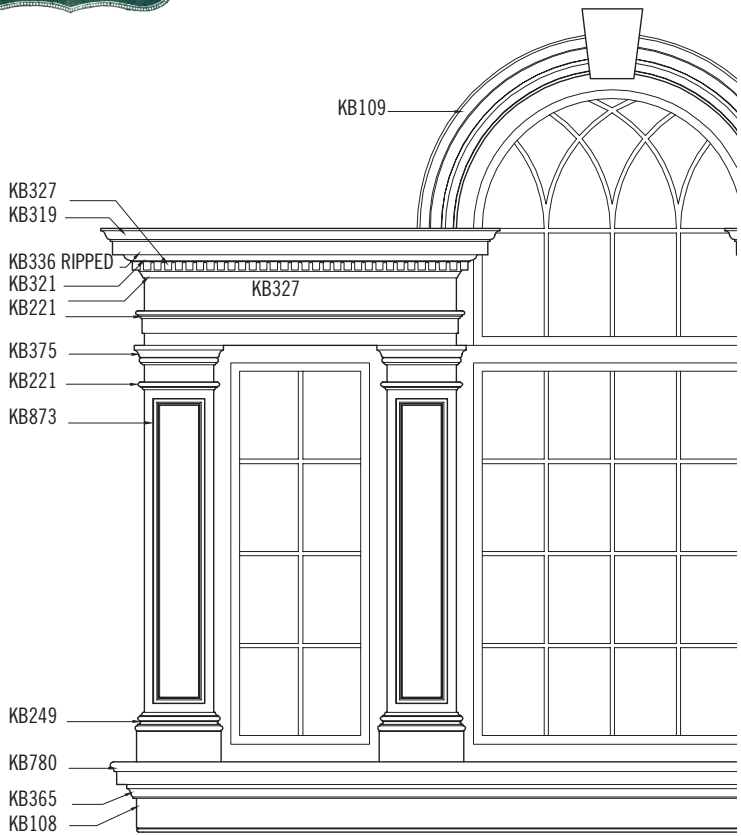

MOULDING DESIGN GUIDE

TRADITIONAL REVIVAL MOULDING PACKAGE

MOULDING DESIGN GUIDE

MODERN CRAFTSMAN LAKE HOUSE KITCHEN

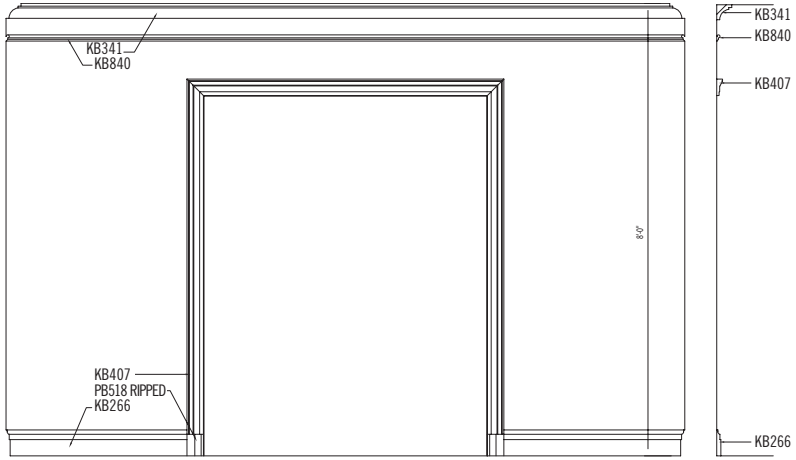

WINDOWS, DOORS, CABINETRY & MILLWORK

The products featured on the following pages may be viewed in person at Kuiken Brothers Showrooms, which should be viewed as extensions of our builder, remodeler and architect customer's business. We have hundreds of windows, doors, cabinetry, moulding, architectural hardware, deck and railing on display in full room settings so that you and your customers can make quick and easy product selections. Our friendly and courteous staff will join you as you walk through the showroom, offering advice to ensure the selection process goes smoothly.

MILLWORK & CABINETRY SHOWROOMS AT KUIKEN BROTHERS

Our friendly and courteous staff will join you and your clients as you walk through the showroom, offering advice to ensure the selection process goes smoothly.

TAKE A TOUR AT **KUIKENBROTHERS.COM/SHOWROOMS**

ANDERSEN™ WINDOWS & DOORS A-SERIES

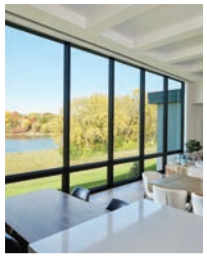

ARCHITECTURAL AUTHENTICITY, UNPARALLELED PERFORMANCE

Designed in conjunction with leading architects to provide authentic architectural style, A-Series windows and patio doors offer all of the options you need to easily create the look you've been dreaming of.

Kuiken Brothers Co. Inc. features quality Andersen products

- Frame is constructed with a wood core and a fiberglass exterior, which is virtually maintenance free, for superior strength, stability and long-term beauty.
- Exterior finish never needs painting and won't flake, rot, blister, peel or corrode
- Weather-resistant construction for greater comfort and energy efficiency
- Rigorously tested in extreme temperatures for long-lasting performance
- With their weather-resistant seals, A-Series windows and doors can withstand up to eight inches of rain per hour and hurricane-force winds
- Many A-Series windows and patio doors have options that make them ENERGY STAR® certified throughout the U.S.

ANDERSEN™ WINDOWS & DOORS E-SERIES

UNLIMITED POSSIBILITIES

With Andersen® E-Series windows and patio doors, the home you've always imagined can be more than a dream. More than a vision. It can be a reality.

Kuiken Brothers Co. Inc. features quality Andersen products

- Wood sash and frame are clad with heavy-gauge aluminum
- Heavy-gauge cladding offers greater structural capabilities than thinner, roll-form aluminum
- Baked-on, silicone polyester enamel exteriors offer virtually maintenance-free performance and durability
- Many E-Series windows and patio doors have options that make them ENERGY STAR® certified throughout the U.S.
- Choose from 50 exterior colors at no additional charge
- Anodized finishes and custom colors available
- Select from a variety of wood species and interior finishes
- Extensive hardware selection, grilles, decorative glass options and more

ANDERSEN™ WINDOWS & DOORS

FOLDING DOORS

Blur the lines between indoors and out with Folding Outswing doors. When closed, they are a stately wall of light and when open, they fold, virtually out of sight. Contemporary and traditional style options make them ideal for nearly any home design.

KEY FEATURES

- 2- to 16-panel configurations available
- Doors can be built to open from the left, right or center
- Multi-point locking system secures the door firmly
- Top hung system allows for easy operation
- Optional retractable insect screen system is hidden from view when not in use, and glides across the complete door opening, stopping at any desired location
- PG40 (DP +40/-40 psf) for sizes up to 24' wide and 8' tall with the on-floor drainage sill option
- PG30 (DP +30/-30 psf) for sizes up to 24' wide and 10' tall with the on-floor drainage sill option
- Maximum weight per panel with Low-E4®, SmartSun™ or Sun glass is 250 lbs per panel

ANDERSEN™ WINDOWS & DOORS

MULTIGLIDE™ DOORS

The MultiGlide™ door not only connects a home to the outdoors, it can be customized to fit any home's design. Beyond offering ultimate design freedom, it's engineered for smooth, easy operation with seamless transitions.

KEY FEATURES

- Fits openings up to 50' wide and 10' tall
- Panel widths 28" to 60" wide and 47 ½" to 116 ½" tall (47" to 117" for flush sill options)
- Rated for air, water and structural performance
- Thermally controlled option is available for increased performance with clad wood panels only
- Available with all standard Andersen glass options including triple-pane glass
- Insect screen options include aluminum framed bottom gliding screen panels or a retractable screen system
- Retractable insect screen system is hidden from view when not in use and glides across the complete door opening, stopping at any desired location.

ANDERSEN™ WINDOWS & DOORS

400 SERIES

TIME-TESTED, CLASSIC WOOD CRAFTSMANSHIP

As our most popular and longest-standing products, the 400 Series product line brings you the best overall blend of performance and style to satisfy any window or door need.

Kuiken Brothers Co. Inc. features quality Andersen products

- A national best-seller, installed in more homes than any other
- Features our patented Perma-Shield® exterior that revolutionized the window industry
- Designed for easy installation for replacement and new construction projects
- Classic wood craftsmanship that stands the test of time
- Wide selection of sizes, shapes, styles and colors to fit a variety of home styles
- Backed by our renowned limited warranty and the largest service network in the industry
- Many 400 Series windows and patio doors have options that make them ENERGY STAR® certified throughout the U.S.

INTRODUCING THE EASY CONNECT JOINING SYSTEM

The ultimate in jobsite convenience. Join large window combinations in the opening with improved performance, fewer headaches and less jobsite labor.

Makes installing window combinations a snap!

Currently available on A Series and 100 Series.

*69% of 156 builders/general contractors in a 2018 survey said they could reduce the number of installers by half using the Andersen Easy Connect joining system when comparing the installation of a 12' wide x 8' high pre-assembled window combination unit with four (4) individual 3' wide x 8' high window combination units.

ANDERSEN™ WINDOWS & DOORS

ANDERSEN® WINDOWS & DOORS

	ENTRY DOORS	BIG DOORS	E-SERIES	A-SERIES
PRODUCT STATEMENT	Handcrafted Premium Wood Entry Doors	Removing Boundaries	Unlimited Possibilities to Create Your Original	Architectural Authenticity, Unparalleled Performance
PRODUCT TYPES		MultiGlide™ Doors MultiGlide Pass-Through Windows (Min RO Size: 60" x 48") Folding Outswing Doors (Max Door Size: 48' x 10') Folding Pass-Through Windows (Min RO Size: 39" x 37") Liftslide Doors (Max Doors Size: 60' x 16') Liftslide Pass-Through Windows (Min RO Size: 59 1/8" x 36") Beefy Bifold Doors Pivot Doors (Max Door Size: 60 sq. ft. glass)	Casement & Awning French Casements Push Out Casement & Awning Double-Hung (Full-Frame, Insert & Sash Kit) Monumental Single-Hung Gliding Windows Specialty Windows Bays & Bows Hinged Patio Doors (Inswing & Outswing) Gliding Patio Doors Sidelights & Transoms	Casement & Awning Complementary Casement Double-Hung Specialty Windows Hinged Patio Doors (Inswing & Outswing) Gliding Patio Doors Sidelights & Transoms Complementary Curved Top Patio Doors
MATERIALS	Wood Exterior & Interior Aluminum-Clad Wood (Aluminum Exterior/ Wood Interior)	Aluminum Wood-Clad Aluminum-Clad Wood Wood Exterior & Interior (Beefy Bifold, Liftslide and Pivot only)	Wood Interior Aluminum Exterior	Wood Interior Composite Exterior
EXTERIOR COLORS	50 Exterior Colors 7 Anodized Finishes + Custom Colors	50 Exterior Colors 7 Anodized Finishes + Custom Colors	50 Exterior Colors 7 Anodized Finishes + Custom Colors	11 Colors
INTERIOR WOOD SPECIES	*	+ Custom	+ Custom	
INTERIOR WOOD FINISHES	Not Available	1 + Custom	+ Custom	†
INTERIOR COLORS	+ Custom Colors	2 + Custom Colors	+ Custom Colors	
GRILLE TYPES	FULL DIVIDED LIGHT GRILLES; SIMULATED DIVIDED LIGHT GRILLES; REMOVABLE INTERIOR GRILLES; FINELIGHT GRILLES BETWEEN-THE-GLASS	3 FULL DIVIDED LIGHT GRILLES; SIMULATED DIVIDED LIGHT GRILLES; REMOVABLE INTERIOR GRILLES; FINELIGHT GRILLES BETWEEN-THE-GLASS	FULL DIVIDED LIGHT GRILLES; SIMULATED DIVIDED LIGHT GRILLES; REMOVABLE INTERIOR GRILLES; FINELIGHT GRILLES BETWEEN-THE-GLASS	FULL DIVIDED LIGHT GRILLES; FULL DIVIDED LIGHT GRILLES WITH ENERGY SPACER BARS; SIMULATED DIVIDED LIGHT GRILLES; REMOVABLE INTERIOR GRILLES; FINELIGHT GRILLES BETWEEN-THE-GLASS
HARDWARE FINISHES	+ Designer Hardware Options	3 + Designer Hardware Options	A + Designer Hardware Options	†† + Designer Hardware Options
NOTES	* Wood species are available on both interiors and exteriors of the door.	1 Interior wood finishes available for MultiGlide door only. 2 Available on MultiGlide and Folding Outswing doors only. 3 Not all grille types and hardware finishes are available for every product, visit andersenwindows.com for details.	A Not all hardware styles are offered in every finish, see individual products for details.	† Finishes available on pine, oak and maple species only. †† Not all hardware styles are offered in every finish, see individual products for details.

ANDERSEN® WINDOWS & DOORS

	400 SERIES	200 SERIES	100 SERIES
PRODUCT STATEMENT	Time Tested Classic Wood Craftsmanship	Warmth of Wood at an Uncommon Value	The Smart Alternative to Vinyl
PRODUCT TYPES	Casement & Awning Complementary Casement Double-Hung Tilt-Wash (Full-Frame & Insert) Gliding Windows Specialty Windows Complementary Specialty Bays & Bows Hinged Inswing Patio Doors Gliding Patio Doors Sidelights & Transoms Complimentary Curved Top Patio Doors	Double-Hung Tilt-Wash Gliding Windows Specialty Windows Hinged Inswing Patio Doors Gliding Patio Doors	Casement & Awning Single-Hung Gliding Windows Specialty Windows Gliding Patio Doors Sidelights & Transoms
MATERIALS	Wood Interior Vinyl Exterior[1]	Wood Interior Vinyl Exterior[1]	Made of Fibrex® material inside and out
EXTERIOR COLORS	2 7 Colors	2 2 Window Colors 6 Patio Door Colors	2 5 Colors
INTERIOR WOOD SPECIES	3	3	Not Available
INTERIOR WOOD FINISHES	Not Available	Not Available	Not Available
INTERIOR COLORS	5	3	4
GRILLE TYPES	FULL DIVIDED LIGHT GRILLES; SIMULATED DIVIDED LIGHT GRILLES; REMOVABLE INTERIOR GRILLES; FINELIGHT GRILLES BETWEEN-THE-GLASS	SIMULATED DIVIDED LIGHT GRILLES; REMOVABLE INTERIOR GRILLES; FINELIGHT GRILLES BETWEEN-THE-GLASS	FULL DIVIDED LIGHT GRILLES; SIMULATED DIVIDED LIGHT GRILLES; FINELIGHT GRILLES WITH EXTERIOR; FINELIGHT GRILLES BETWEEN-THE-GLASS
HARDWARE FINISHES	6 + Designer Hardware Options	6 + Designer Hardware Options	6
NOTES	1 Some products in this Series have alternate construction methods and materials used, see individual products for details. 2 Not all products are offered in every color, see individual products for details. 3 Not all products are offered in these wood species, see individual products for details. 4 Products with black, dark bronze and Sandtone interiors have matching exteriors. 5 Windows only. Dark bronze and black interiors are only available with dark bronze and black exteriors respectively. See your Andersen supplier for availability. 6 Not all hardware styles are offered in every finish, see individual products for details.		

The Marvin Ultimate™ collection is made for those who care about every detail and simply won't compromise on their vision. Offering beautiful aesthetics, craftsman-quality construction, and the industry's most extensive selection of shapes, styles, sizes, and options, Ultimate products deliver more design possibilities. Customization opportunities and versatility across architectural styles make Ultimate windows and doors ideal for ambitious design challenges, as well as a wide range of project types. Thoughtful features deliver an effortless and exceptional experience while industry-leading performance ratings provide peace of mind in even the harshest conditions.

The Marvin Elevate® collection is a blend of remarkable design and superior strength, bringing balance to style and performance needs. Patented fiberglass exteriors stand up to all elements, outperforming and outlasting vinyl, roll-form aluminum and other fiberglass composites. Warm wood interiors add timeless beauty. **Formerly Integrity Wood/Ultrex**

The Marvin Essential® collection brings together design, quality, and performance in one streamlined offering. Strong, durable fiberglass exteriors and interiors are both striking and virtually maintenance-free. Simplified options provide clean lines and versatile styles making it easy to meet project demands. **Formerly Integrity All Ultrex**

Find out more at **WWW.MARVIN.COM**

THE MARVIN PORTFOLIO

MARVIN

ULTIMATE	ELEVATE	ESSENTIAL	MODERN
Most extensive selection of features, options, and product types	Wide range of options and product types	Curated options and product types	Design flexibility in a purely modern aesthetic available exclusively at Marvin Modern dealers

INTERIORS

A selection of high-quality interior materials and finishes to complement every design aesthetic

WOOD 6 species options + custom Painted or primed 6 stains + clear coat	**WOOD** Bare pine, painted Designer Black, painted White, or clear coat	**FIBERGLASS** 4 color options	**EXTRUDED ALUMINUM** 5 color options

EXTERIORS

Long-lasting, low-maintenance exteriors with best-in-class finishes for superior durability in the harshest of environments

EXTRUDED ALUMINUM 19 colors + custom **WOOD** 3 species + custom	**FIBERGLASS** 6 color options	**FIBERGLASS** 6 color options	**FIBERGLASS** 5 color options

SIZING

Windows and doors built to your exact specifications

Standard + custom sizing for replacement, remodeling, or new construction			Custom sizing for remodeling or new construction

HARDWARE

For enhanced durability in harsh climates, some exterior hardware options are available with extra long-lasting PVD finishes

Extensive selection including Marvin Gallery Hardware	Available in 6 finish options with 2 door handle styles	Available in 6 finish options with 1 door handle style	Minimalist hardware for modern design aesthetic

COASTAL + WATERFRONT

All Marvin products are well suited for coastal and waterfront areas with special products and hardware designed for hurricane zones

Hurricane Impact Zones 3, + PG 50 Products	Hurricane Impact Zone 3, + PG 50 Products		

MATERIALS	ULTIMATE	ELEVATE	ESSENTIAL	MODERN
INTERIORS				
WOOD	✓	✓		
EXTRUDED ALUMINUM				✓
FIBERGLASS			✓	
EXTERIORS				
WOOD	✓			
EXTRUDED ALUMINUM	✓			
FIBERGLASS		✓	✓	✓

PRODUCTS	ULTIMATE	ELEVATE	ESSENTIAL	MODERN
WINDOWS				
	Double Hung Single Hung Casement Awning Glider Picture Round Top Specialty Shapes Hopper Push-Out Corner	Double Hung Single Hung Casement Awning Glider Picture Round Top Specialty Shapes Hopper Push-Out Corner	Double Hung Single Hung Casement Awning Glider Picture Round Top Specialty Shapes Hopper Push-Out Corner	Double Hung Single Hung Casement Awning Glider Picture Round Top Specialty Shapes Hopper Push-Out Corner
FEATURES + OPTIONS	Casement Wash Mode Double Hung Tilt Wash Smart Home Lock Sensors Triple Pane	Casement Wash Mode Double Hung Tilt Wash Smart Home Lock Sensors Triple Pane	Casement Wash Mode Double Hung Tilt Wash Smart Home Lock Sensors Triple Pane	Casement Wash Mode Double Hung Tilt Wash Smart Home Lock Sensors Triple Pane
DOORS				
	Sliding Patio Sliding French Inswing/Outswing Pivot Scenic Multi-Slide Scenic Bi-Fold Scenic Lift and Slide Scenic Corner	Sliding Patio Sliding French Inswing/Outswing Scenic Bi-Fold Pivot Scenic Multi-Slide Scenic Bi-Fold Scenic Lift and Slide Scenic Corner	Sliding Patio Sliding French Inswing/Outswing Pivot Scenic Multi-Slide Scenic Bi-Fold Scenic Lift and Slide Scenic Corner	Sliding Patio Sliding French Inswing/Outswing Pivot Scenic Multi-Slide Scenic Bi-Fold Scenic Lift and Slide Scenic Corner
FEATURES + OPTIONS	Automated Controls Smart Home Lock Sensors Retractable Screens	Automated Controls Smart Home Lock Sensors Retractable Screens	Automated Controls Smart Home Lock Sensors Retractable Screens	Automated Controls Smart Home Lock Sensors Retractable Screens
OPTIONS				
	Divided Lites Bars with Spacer Bars without Spacer Grilles-between-the-Glass Authentic Divided Lites Glass Energy Efficient Options Decorative Sound Abatement Laminated Fire Glass (California) Turtle Glass	Divided Lites Bars with Spacer Bars without Spacer Grilles-between-the-Glass Authentic Divided Lites Glass Energy Efficient Options Decorative Sound Abatement Laminated Fire Glass (California) Turtle Glass	Divided Lites Bars with Spacer Bars without Spacer Grilles-between-the-Glass Authentic Divided Lites Glass Energy Efficient Options Decorative Sound Abatement Laminated Fire Glass (California) Turtle Glass	Divided Lites Bars with Spacer Bars without Spacer Grilles-between-the-Glass Authentic Divided Lites Glass Energy Efficient Options Decorative Sound Abatement Laminated Fire Glass (California) Turtle Glass

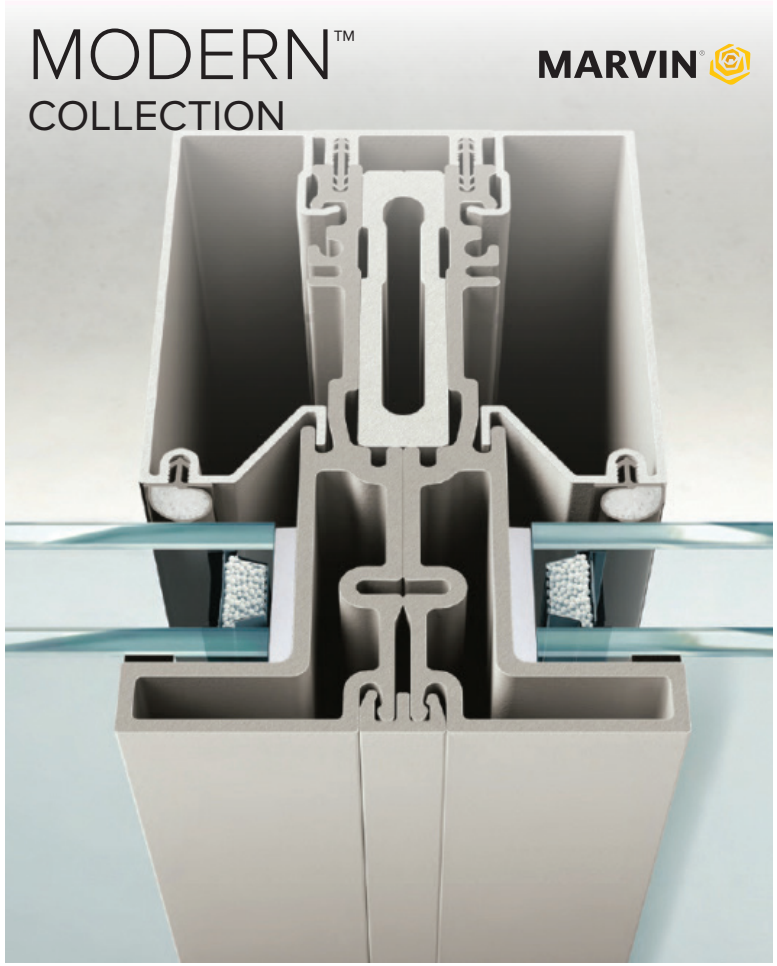

The Marvin Modern™ collection brings exceptional design, performance, and customer experience together—creating a product line that meets the exacting principles and standards of true modern architecture. An innovative high-density fiberglass material, leading thermal performance, consistent narrow sightlines, and a modular system all add up to the Modern product line—a seamless approach to modern design. Available in five curated interior and exterior color designed to match your modern design.

Find out more at **WWW.MARVIN.COM/MODERN**

VELUX®

Skylights

The VELUX Skylight System

This skylight and shade system is a new daylighting experience that creates a more comfortable environment while giving you total light control in any space.

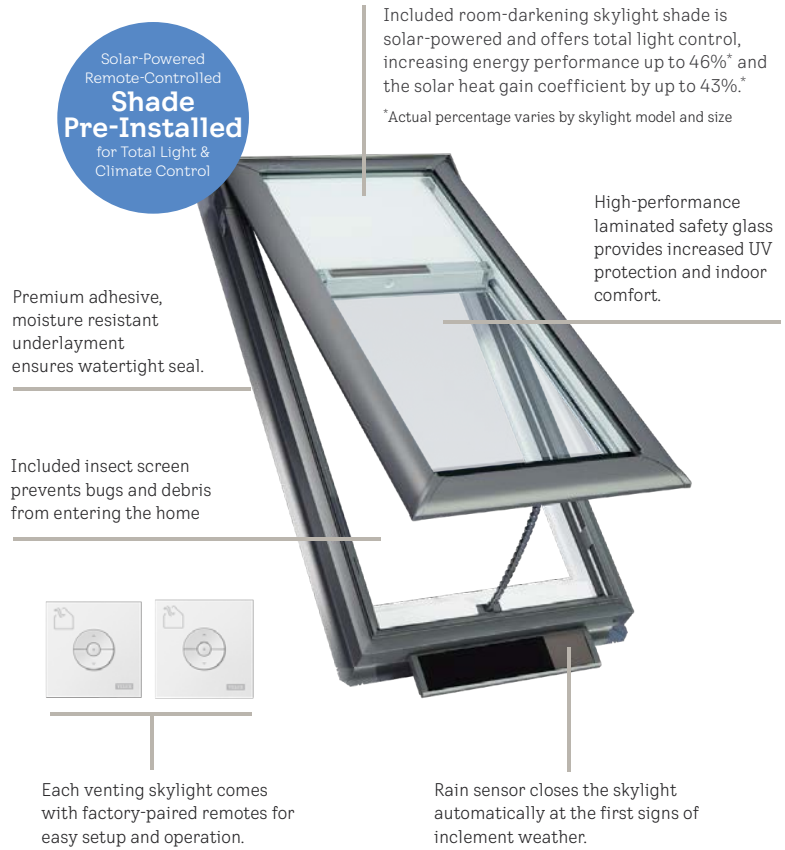

Commercial builders and developers choose Kuiken Brothers millwork specialists because we are responsive, collaborative, and communicative throughout the project. Our long term relationships with the nations most trusted millwork manufacturers ensures competitive pricing without compromising on quality or service. Contact the commercial building material experts at Kuiken Brothers today.

LEARN MORE

DOORS & ARCHITECTURAL HARDWARE

NEW

THERMA-TRU® DOORS

¾-Lite Flush-Glazed Shaker-Style Doors and Sidelites

FOR FIBER-CLASSIC® AND SMOOTH-STAR® DOORS

Discover the full portfolio of Fiber-Classic and Smooth-Star Shaker-style doors and sidelites—crafted to complement nearly every home style.

Capture the beautiful simplicity of Shaker style with 3/4-lite 1-panel doors and sidelites with flush-glazed glass. Available with privacy and textured, energy-efficient Low-E glass and divided lite styles.

REEB® an SBP brand

Folding Glass Doors

THERMA-TRU® DOORS

Veris® COLLECTION

Possibilities unfold.

Veris folding glass doors are perfect for connecting indoor and outdoor spaces in homes with patios, decks, enclosed porches and more. These operable walls offer a flexible and customizable opening, including an optional swing door, that allows the user to easily enter or exit a room without opening all the panels.

Primed Stile & Rail Doors

Primed stile and rail doors are an ideal choice for homeowners seeking to add a clean look to their modern, traditional or craftsman style homes. They feature architecturally correct layouts, crisp shadow lines and highly defined panels providing a superior level of detail.

- Available 1-3/8" and 1-3/4" thickness
- Choose 3/8" or 5/8" MDF Flat Panel with Shaker or Ovolo sticking
- Select styles available in 6/8, 7/0 and 8/0 for immediate shipment

(Door Above) PR8782

PR8720 PR8782 PR8760 PR8740

PR8755 PR730F PRF2310 PRF2302

To view the complete offering of primed stile and rail doors available from Reeb® for immediate shipment, please visit us at **kuikenbrothers.com/catalogs**

RF
REEB FINISH

Reeb® Finish
PrismaGuard® Stain

A superior staining system for fiberglass doors that produces a uniquely realistic and durable finish. Skilled Reeb Finish craftsmen hand-brush each component of the door to enhance its deep embossments and authentic grain patterns. Two top coat layers highlight fine details and ensure superior endurance and protection from the elements.

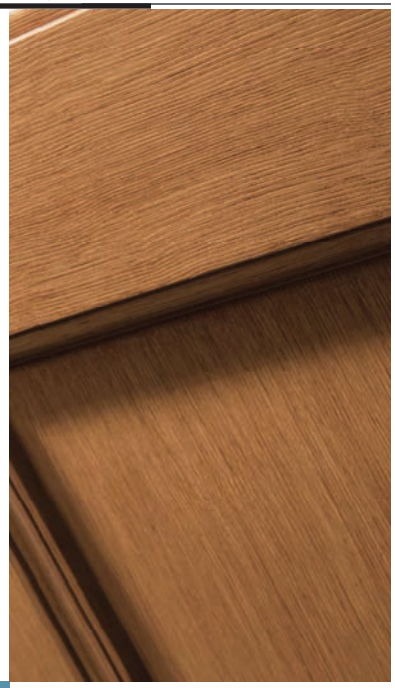

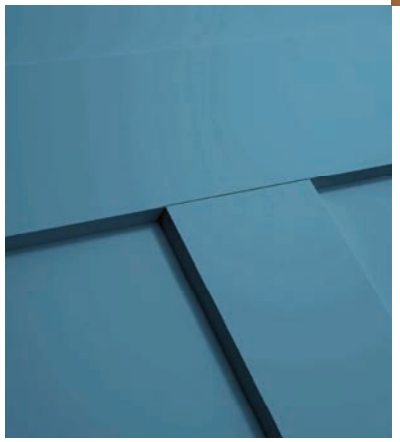

Reeb® Finish
PrismaGuard® Paint

A versatile color palette featuring elegant, modern hues and bold, rustic tones provide exciting options to achieve the look you desire. The two top coat layers product additional depth and resistance to fading. For a complete entryway solution, several color options match Reeb's door accessories.

10 YEAR LIMITED WARRANTY

PRISMAGUARD®

REEB® an SBP brand

Go bold with confidence. Simpson exterior doors are paint-ready for rich, dramatic finishes. For black or other dark colors, choose Nantucket Collection™ doors made with Accoya (provided factory-primed and can be painted any color).

- Maintains the 10-Year Warranty with no overhang required
- Factory priming included for a smooth paint base

Contact Kuiken Brothers to learn more.
kuikenbrothers.com | 201.652.1000

Simpson® Door Company

© 2026 Simpson Door Company. All trademarks property of Simpson unless otherwise noted. All rights reserved. March 2026.

MARVIN + TRŪSTILE

"We really like TruStile doors. There are a lot of options and a ton of styles. We've never had people ask us to switch into a different brand because they can't find what they want, so we always can meet the needs of our clients."

MARNIE OURSLER
PRESIDENT & OWNER, MARNIE CUSTOM HOMES

Discover a True *Whole-Home* Solution

Make a statement throughout the home with TruStile® interior and entry doors, a Marvin brand. With the same great quality and design flexibility you expect from all Marvin products, you can rely on TruStile to help your projects stand out.

Choose pure quality interior and entry doors with TruStile, a Marvin brand.

trustile.com

Cavity Sliders™

Now in stock at Kuiken Brothers, the CS Cavity Slider (2×4 framing) and the CS Ultimate Cavity Slider (2×6 framing) pocket door frames. Made from high-quality aluminum extrusions, the CS Cavity Slider meets Type 1 construction code with zero combustible materials. In addition to its space saving attributes in restrooms, hallways and laundries, it can be used with confidence for architectural feature openings around your project.

STOCK CAVITY SLIDERS

	3068	3080	4080
2x4 Studs - CS Pocket Door Frames	■	■	■
2x6 Studs - CS Pocket Door Frames		■	■

	200LB Rating	500LB Rating
CS M6 Carriage Kit w/ 1 Stop	■	
CS M8 Carriage Kit w/ 1 Stop		■
CS SoftStop Single Action	■	
CS SoftStop Double Action	■	

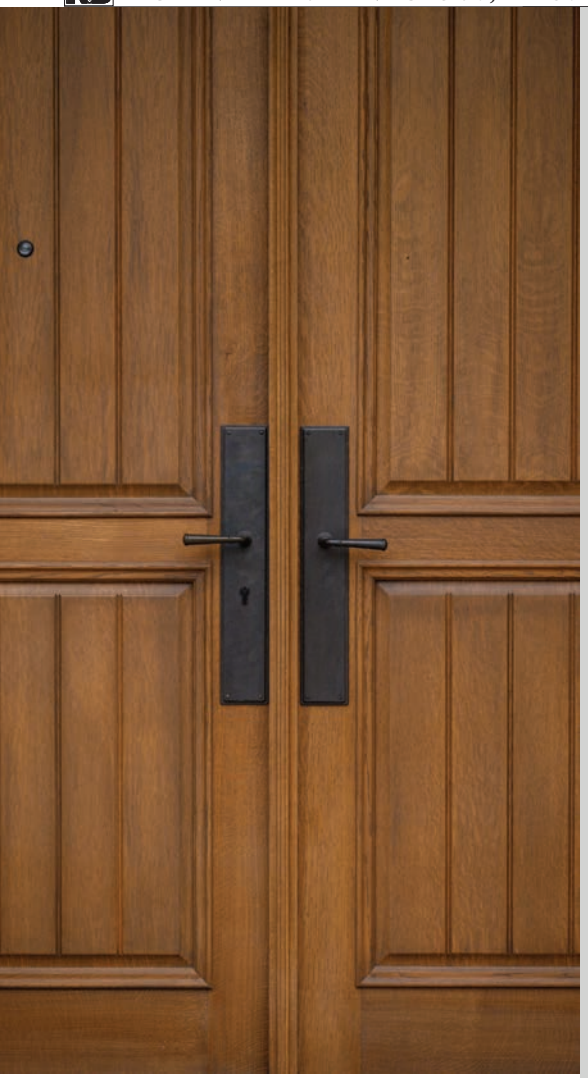

Signature Door

CUSTOM WOOD ENTRYWAYS

www.signaturedoor.com

The Signature Door design team is dedicated to turning your sketches and ideas into a reality. Our expert CAD department typically generates detailed drawings of your custom unit within 24 hours, making it easier than ever to put your personal signature on your home with a beautiful custom door.

It's not just a door, it's a *Signature*

Start your custom door journey today at a Kuiken Brothers Showroom.

FINISH HARDWARE

Interior Door / Entry Door / Pocket Door / Electronic / Cabinetry

FEATURED BRANDS:

BALDWIN EMTEK JEFFREY ALEXANDER™ by Hardware Resources

OMNIA ROCKY MOUNTAIN HARDWARE SCHLAGE TK | TOP KNOBS

Door Handing Inside the Room

When the door opens to you and the knob is on the left, it is a left hand door.

Left Hand

Right Hand

When the door opens to you and the knob is on the right, it is a right hand door.

Door Handing Outside the Room

When the door swings open to the left, it is a left hand door.

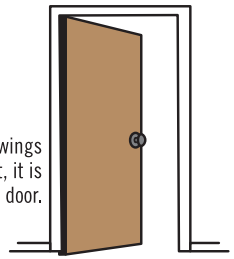

Left Hand

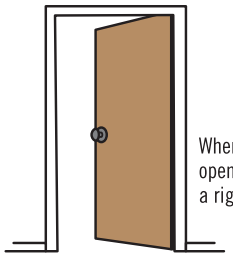

Right Hand

When the door swings open to the right, it is a right hand door.

Interior Doors

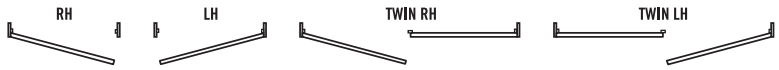

Interior Doors

Exterior Inswing Doors - Exterior Side

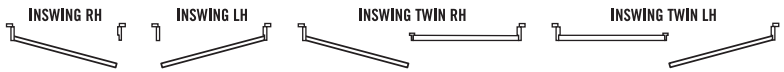

Exterior Inswing Doors - Interior Side

Exterior Outswing Doors - Interior Side

Exterior Outswing Doors - Exterior Side

**Some manufacturers, including Andersen Windows, follow hinge location to determine door swing. The above chart is intended for quick reference. Please confirm with your Kuiken Brothers representative prior to order completion.*

KUIKEN BROTHERS COMPANY INC. RESIDENTIAL & COMMERCIAL BUILDING MATERIALS *Since 1912*

COMMERCIAL DOORS & HARDWARE

The following pages represent products supplied through our Commercial Door & Hardware Department in Garfield, NJ. In addition, we are able to provide you with in-house modification and a UL Label shop, as well as plan take-offs and project management. We service commercial projects large and small, including light commercial, multi-family projects, institutional projects and more.

HOLLOW METAL
DOORS & FRAMES

KUIKEN BROTHERS stocks and has the capability to custom fabricate a wide variety of commercial hollow metal doors and frames. Additionally, we also offer the following value added services:

- Plan Take-offs and Estimating
- Architectural Hardware Consultants on Staff
- Computerized Submittals and Shop Drawings
- Hollow Metal + Wood Doors In-Stock
- Hollow Metal Knock Down + Welded Frames In-Stock
- Quick Ship Custom Orders
- Large Inventory of Stock Commercial Hardware – All Major Manufacturers

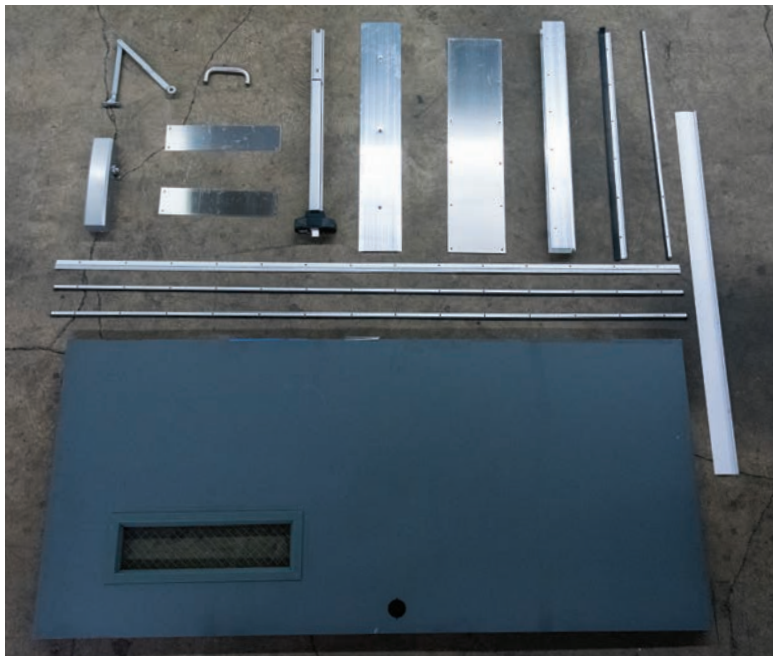

KUIKEN BROTHERS Commercial Door Shop capabilities include:

- Intertek Licensed Modification Shop
- Frames Welded In-House
- Primed Painted Frames & Doors
- Lite and Louver Kit Installation
- Glass Installed in Doors

For more information call 973-272-0800

KUIKEN BROTHERS COMPANY INC. Since 1912 COMMERCIAL BUILDING MATERIALS

ARCHITECTURAL
DOORS & HARDWARE

We have supplied commercial contractors with doors that grace the openings in many great commercial buildings throughout the area including schools, hospitals, assisted living facilities, religious institutions, office buildings, hotels and recreational facilities. Contact Kuiken Brothers Commercial Building Materials for all of your entry door needs.

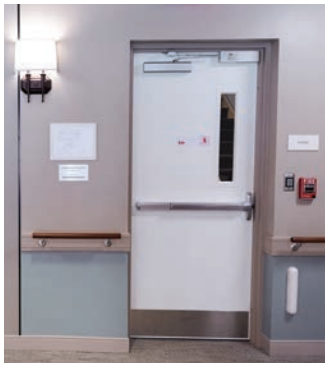

FORTE OPENING SOLUTIONS
TRŪSTILE A MARVIN BRAND
ASSA ABLOY
ALLEGION
ELIASON
EZCONCEPT
MT INDUSTRIES

KUIKEN BROTHERS stocks a wide variety of commercial hardware products from major manufacturers such as Schlage, Falcon, and Von Duprin. We will also work with our network of suppliers, Schlage, Falcon, Von Duprin, Corbin and Yale, to meet any other request you may have. Contact the Commercial Door & Hardware department today!

KUIKEN BROTHERS COMPANY INC. Since 1912
COMMERCIAL BUILDING MATERIALS

STOCK HOLLOW METAL DOORS

1-3/4" FLUSH DOOR

Type	2070	2668	2670	2868	2870	3068	3070	3668	3670	4068	4070
18 Gauge	■	■	■	■	■	■	■	■	■	■	■
18 Gauge SteelCraft Location						■	■				
18 Gauge Mortise Lock Prep						■	■				
18 Gauge w/ Flushbolt ASA Prep	■	■	■			■	■				
18 Gauge w/ Cylinder Prep Insulated						■	■				
18 Gauge w/ Mortise Prep Insulated						■	■				
18 Gauge Reinforced Blank						■	■				

Kuiken Brothers stocks and supplies a full line of quality custom and standard hollow metal doors and frames for new and retrofit construction projects in the commercial, educational and healthcare markets throughout New Jersey and New York. Our Intertek Licensed Modification Shop in Garfield, NJ will modify doors and frames, install visions, glass and louvers where required. We weld frames, sidelite frames and borrowed lites in-house.

**Subject to Change*

MILLWORK

KUIKEN BROTHERS COMPANY, INCORPORATED
LUMBER • BUILDING MATERIALS • MILLWORK • KITCHENS
Since 1912

Custom Curved Moulding & Millwork

Kuiken Brothers has the capability to fabricate curved and radius units from all of our stock and custom moulding options for both interior (MDF, all hardwoods) and exterior applications (Kleer PVC).

Contact your Kuiken Brothers sales representative for measurement instructions.

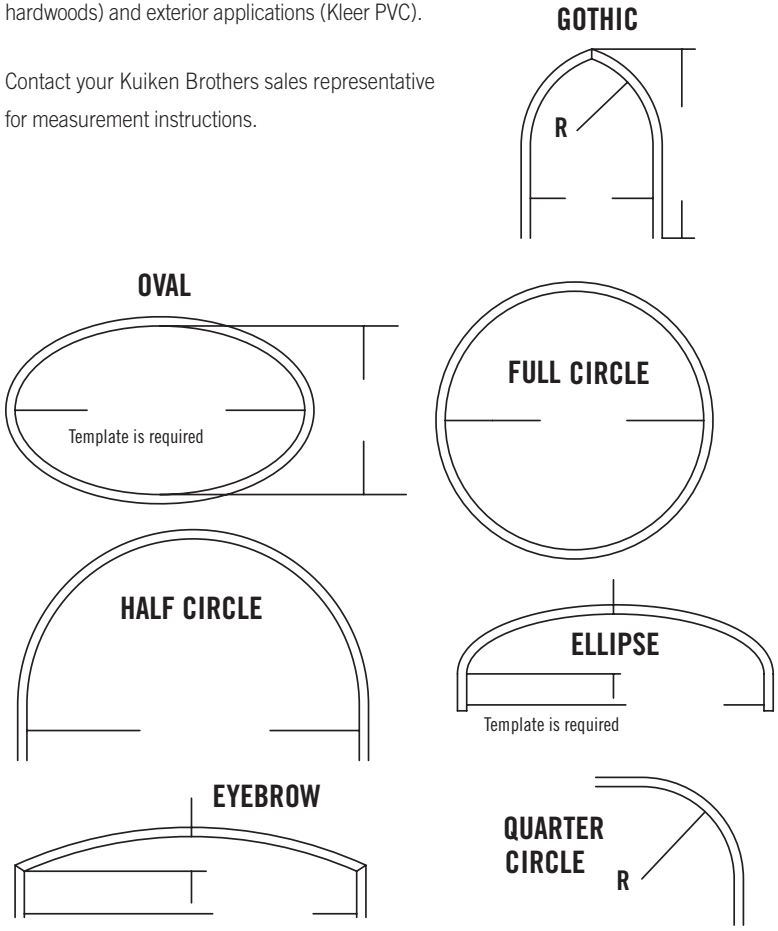

KUIKEN BROTHERS COMPANY, INCORPORATED
LUMBER • BUILDING MATERIALS • MILLWORK • KITCHENS
Since 1912

Pre-Fabricated Openings

KUIKEN BROTHERS has the ability to custom build the entire headpiece of an arched entrance as one, pre-fabricated unit, consisting of the curved jamb pre-attached to the casing, with or without keystones or capital blocks. Headpiece options include curved configurations, including elliptical, half-round or eyebrow shapes in your choice of Kuiken Brothers stock or custom mouldings.

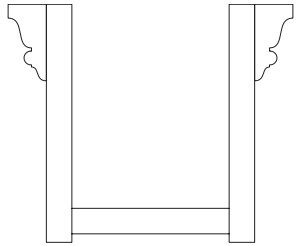

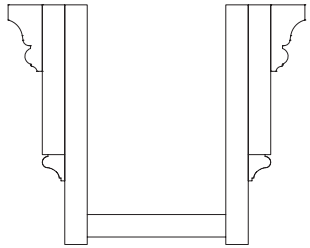

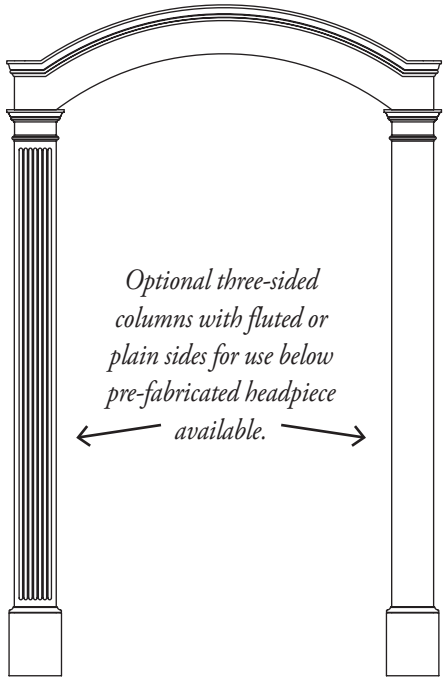

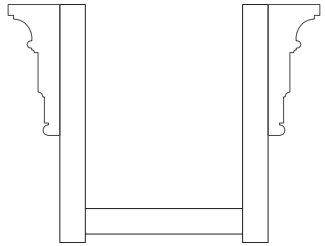

Flexible Moulding

KUIKEN BROTHERS complete collection of in-stock mouldings can be replicated in flexible moulding for curved applications where wood or MDF mouldings simply won't bend.

APPLICATIONS

- Curved Stairwells
- Radius Drywall Corners
- Bowed Windows
- Half Round Windows
- Elliptical Windows
- Arches and Arcs
- Ceiling Domes

BENEFITS

- Appearance of real wood
- Ease of installation – use standard woodworking equipment – cut, sand, shape and finish like wood
- No lamination defects
- Accommodate virtually any radius which is 3 times profile width or greater

MILL OUR PROFILES FROM THE HARDWOOD OF YOUR CHOICE!

- All Kuiken Brothers moulding profiles are available in most hardwood and softwood species
- No Minimum Quantities Required
- Quick Ship Program (Available within 7 business days)
- Over 60 popular moulding profiles are quickly available in poplar, red oak, maple, cherry and sapele (Mahogany)
- Custom Run Program (Available within 10-14 business days)

STOCK HARDWOOD BOARDS

Available in Oak, Cherry, Mahogany & Maple
1x4, 1x6, 1x8, 1x10, 1x12
5/4x4, 5/4x6, 5/4x8, 5/4x10, 5/4x12

STOCK HARDWOOD PLYWOOD

Available in Oak, Cherry, Mahogany & Maple
4x8-1/4, 4x8-1/2, 4x8-3/4

**Cherry Boards stocked in 1x4, 1x6, 1x8. Cherry Plywood Stocked in 4x8-3/4*

GROVE Collection

KLEER™
PVC TRIM, MOULDING & ACCESSORIES

The Grove Collection is a standout ceiling and soffit offering that includes Nickel Gap, V-Groove, Beadboard and Trim Board options. You can achieve a rich stained wood look with their expanded Grove Collection™ lineup that tops wood in low maintenance and lasting durability.

- Elegant look of stained wood
- Low-maintenance PVC
- Moisture & insect proof
- Hidden nailing hem for easy installation

TruExterior® Siding & Trim

Phenomenal Performance.
Remarkable Workability.

Pioneering the entirely new category of poly-ash building products, TruExterior Siding & Trim are like no other siding or trim products on the market today. Offering phenomenal performance, remarkable workability and a lasting look, TruExterior products solve the moisture- and movement-related issues commonly seen with other exterior materials.

- Maintains dimensional stability
- No cracking or splitting from moisture
- Resists rot and termite attacks
- Installs with standard woodworking tools
- Can be painted any color
- No need to prime ends or field cuts

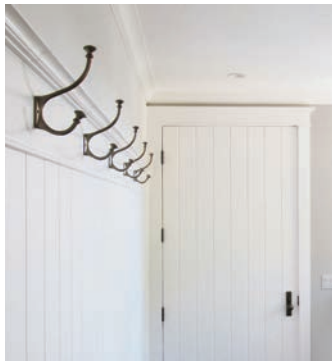

SHIPLAP, TONGUE & GROOVE

- KB914
- KB915
- KB908
- KB904
- KB906
- KB900

TRIM BOARDS

- 1x2
- 1x3
- 1x4
- 1x5
- 1x6
- 1x8
- 1x10
- 1x12

- 5/4x3
- 5/4x4
- 5/4x5
- 5/4x6
- 5/4x8
- 5/4x10
- 5/4 x12

**Based on proper installation, call 888.229.7900 or see WindsorONE.com/install for details*

ROCKWELL™ WINDOW WELLS

ROCKWELL WINDOW WELLS have a stone texture that truly looks and feels like real stone. Adding great curb appeal and an aesthetically pleasing view both inside the house and outside. Our stone texture window wells also allow for more light into an otherwise dark and drab basement. Egress window well covers are also available.

ROCKWELL WINDOW WELLS

	42 Series	66 Series
RW 24" Height Non-Egress Gray/Tan	■	
RW 36" Height Non-Egress Gray/Tan	■	
RW 60" Height Egress Gray/Tan		■
RW 72" Height Egress Gray/Tan		■
RW Polycarbonate Safety Cover	■	■

DENALI WINDOW WELLS

	60 Series
Denali 60" Height Egress Gray	■
Denali 73" Height Egress Gray	■
Denali Polycarbonate Safety Cover	■
Denali 54" 3 Rung Ladder for Egress	■

HB&G

HB&G manufactures architectural columns, various styles of fiberglass round and square columns, softwood and hardwood columns, mantel columns, decorative capitals, composite and wood porch posts, softwood stair parts and composite and vinyl rail systems. Combining centuries old principles and modern technology, our master craftsman and trained technicians create exquisite products and are among the industries most skilled and experienced artisans. Contact Kuiken Brothers for a current list of stock HB&G products.

INTEX® MILLWORK SOLUTIONS

INTEX MILLWORK SOLUTIONS specializes in the design and fabrication of custom PVC trim and millwork. Architects and builders rely on INTEX's strengths in both traditional workmanship and engineering technology to craft intricately detailed, high-quality millwork for distinctive homes and buildings.

The company has also innovated a line of fabricated, ready-to-install PVC window and door surrounds, and offers standard PVC millwork lengths and decorative accessories.

FYPON

FYPON® MOULDED MILLWORK® is made of high density polymer. It will not rot, is insect resistant and is virtually maintenance free. Stop by any Kuiken Brothers location and explore the architectural style that most interests you, and get tips and suggestions about how to make your dream a reality. Don't forget to ask for the full line catalog.

Atlantic
Premium Shutters®

With an unparalleled combination of style, craftsmanship and durability, Atlantic Premium Shutters let you create a portrait that's as subtle or bold as you wish. Our fully functional and operable shutters are architecturally correct and historically accurate. With details like open louvers and period-inspired working hardware, Atlantic shutters offer an exceptional product for discerning homes. Made-to-order for your windows, hand-assembled and hand-sanded, Atlantic Premium Shutters fuse time-honored design with reliable integrity. These color-rich shutters will not crack, split, rot, peel or flake.

WWW.ATLANTICPREMIUMSHUTTERS.COM

SOUTHERN SHUTTER COMPANY

SOUTHERN SHUTTER COMPANY manufactures quality wood products using high-grade materials and fine craftsmanship. Though our production facility is fully equipped to produce precision-cut wood components in high volume, we have never abandoned the hands-on approach to quality construction. Each piece is carefully fitted by a Southern Shutter craftsman.

Ply Gem®

PLY GEM® vinyl shutters make it easy to add the perfect finishing touches to any home. These shutters are available in both raised panel and classic open louvered designs. Wood Blinds are also available in either raised panel or louver; interior or exterior grade; and can be custom made to fit any opening. Interior shutters have the options of adjustable louvers and fabric frames. All shutters can be ordered in various sizes and colors. Since shutters have to be ordered, talk to your Kuiken Brothers representative for more information.

MARWIN

MAKE SURE IT'S MARWIN-MADE.

The Atlas

The Titan

The Titan SS

THE SUPERIOR PLUS

- 375 lb duty rating
- 1x5 Frame and Stringer
- 1x6 Tread
- Two Strong Metal Handrails

THE ATLAS

- 350 lb duty rating
- 1x4 Frame and Stringer
- 1x4 Tread
- One Strong Metal Handrail

THERMABLOC

- 2 1/4" thick insulated R-10 door
- U-Factor of .10, R-Value of 10.0 (entire unit)
- Incorporates Q-Lon smoke rated weather-stripping
- Exterior grade door frame
- 375 lb duty rating (Wood Models)

THE TITAN

- 375 lb duty rating
- Aluminum sections
- Heavy duty galvanized steel hardware with "Safety Edge"
- Adjustable Foot Support with rubberized foot pads

THE TITAN SS

- Lightweight, high strength aluminum alloy
- Ceiling heights from 8'0" - 10'4"
- R-5 Insulated Panel
- 5-1/4" Deep Tread

KITCHEN & BATH CABINETRY

KITCHEN & BATH CABINETRY FOR BUILDING PROFESSIONALS AND HOMEOWNERS

Kuiken Brothers Kitchen & Bath has the experienced designers and wide range of cabinet options to fit your budget and time frame.

VISIT OUR SHOWROOMS – SCHEDULE A JOBSITE VISIT
www.kuikenbrothers.com/kitchens

EMERSON, NJ
Tel (201) 705-5804
246 Kinderkamack Rd.
Emerson, NJ 07630

SUCCASUNNA, NJ
Tel (973) 968-7700
31 Route 10 East,
Succasunna, NJ 07876

WARWICK, NY
Tel (845) 986-2255
33 South Street
Warwick, NY 10990

EXPERIENCED DESIGNERS

SHOWROOMS

20/20 CAD DRAWINGS

SELECTIONS TO FIT WITH YOUR SCHEDULE & BUDGET

DELIVERY TO YOUR JOBSITE

Kuiken Brothers' Succasunna, NJ Kitchen & Bath Cabinetry Showroom

CUSTOM CABINETRY OPTIONS

Our full custom cabinets are made to order. Custom door styles, finishes, sizes and more. This is our best series and offers more flexibility. Longer lead times and the cost is the highest of the group. When a customer wants to achieve that custom look, we recommend our Mouser line.

FEATURED CUSTOM CABINETRY BRAND:

Mouser Cabinetry

Kuiken Brothers Kitchen Cabinetry Ridgewood, NJ

SEMI-CUSTOM CABINETRY OPTIONS

Our semi-custom line, also referred to as "Made to Order," offers a wide range of door styles and finishes. These offer many of the options and amenities that a fully custom line offers, at a reduced price. Typical lead times on these lines are 5-7 weeks. You can find semi-custom cabinetry options from Mouser, Bertch Bath and Shiloh.

FEATURED SEMI-CUSTOM CABINETRY BRANDS:

Mouser Cabinetry

Shiloh™ CABINETRY

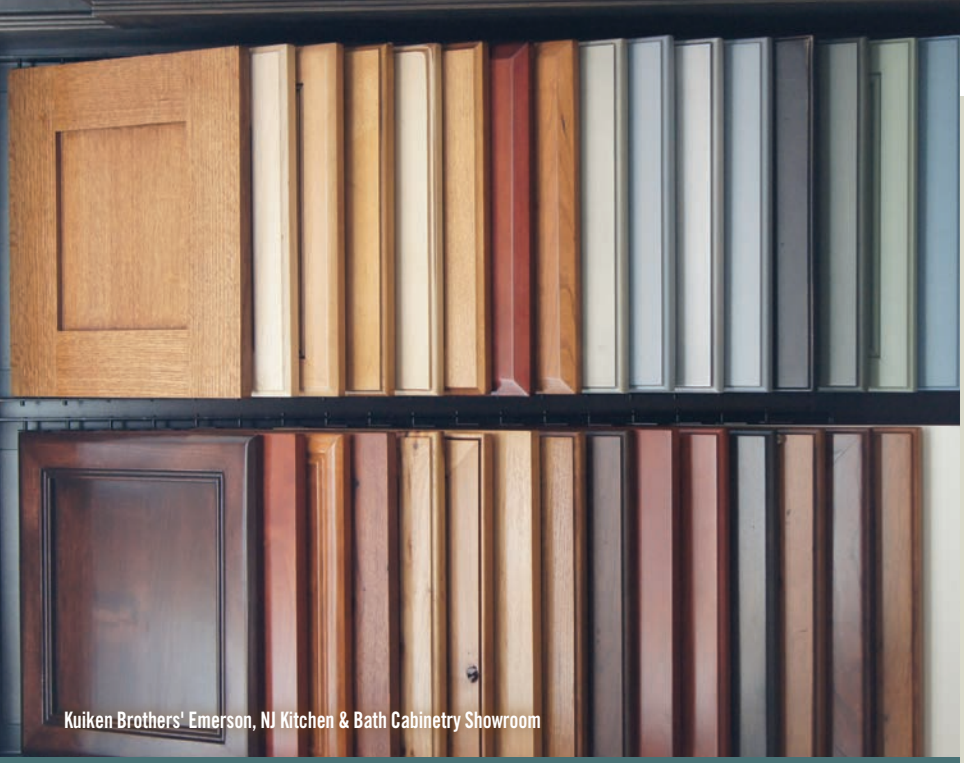

Kuiken Brothers' Emerson, NJ Kitchen & Bath Cabinetry Showroom

STOCK CABINETRY OPTIONS

With a general 2 week lead time, this offering makes them our most convenient and affordable series. Even though we call them "stock" there are still many different door styles and options to choose from. Our primary “stock” cabinet lines are FabuWood and Merillat.

FEATURED STOCK CABINETRY BRANDS:

fabuwood®

Bertch® bathcabinetry

MC mid continent CABINETRY

EXPERIENCE THE KUIKEN DIFFERENCE

DIMENSIONAL LUMBER
- #2 & Better Green Doug Fir
- Pressure Treated Lumber
- Fire Retardant Lumber

ENGINEERED LUMBER
- Boise Cascade AJS/ BCI I-Joist
- Boise Cascade Versa-Lam
- Boise Cascade Rim Board
- Boise Cascade VersaStud LVL
- Roof & Floor Trusses
- Wall Panels

BOARDS, PATTERN & SPECIALTY LUMBER
- Kleer PVC Boards
- Windsor One Primed Pine
- TruExterior Trim & Siding
- #2 & C&Btr White Pine
- STD& BTR & A&Btr Cedar
- Utility & Btr Spruce Boards & Bridging
- Red Oak, Cherry, Poplar, Maple and Sapele Mahogany Boards
- Red Cedar Shakes & Shingles
- White Cedar Undercourse
- Primed Fiberboard
- OSHA Approved Scaffold Planks
- Cedar Closet Lining

PLYWOOD & PANELS
- AC Plywood
- AB Marine Plywood
- CD Fir Sheathing
- MDO Panels
- Square Edge Underlayment
- 3/4˝T&G Fir Underlayment
- Fir T-111 Panels
- SYP Plybead
- MDF Beadboard
- Patriot RevBead Beadboard Panel
- Commodity 7/16” OSB
- Huber BluePlus, Advantech, ZipSystem, Zip R & Exacor
- Kleer PVC Panels
- Melamine Shelving
- Lightweight Fiberboard Panels
- Fire Retardant CD
- Pressure Treated Underlayment
- Lauan & Bending Lauan Plywood
- Red Oak, White Oak, Cherry, Maple & Sapele Mahogany Plywood, Prefinished Maple Plywood
- Birch Plywood Domestic & Imported
- Hardboard & Pegboard Panels
- Homasote Panels
- Sound Deadening Boards

FLOORING
- Iron Woods IPE Porch Flooring
- Aeratis PVC Flooring
- Meranti Porch Flooring
- Fir Porch Flooring & Stepping
- Select Oak Flooring
- Pine Flooring & Stepping (C Select)

WINDOWS, DOORS & MISCELLANEOUS MILLWORK
- Andersen Windows & Doors
- Andersen Architectural Collection (A-Series,E-Series)
- Marvin Signature Windows & Doors
- Marvin Elevate & Essential Windows & Doors
- United Vinyl Windows
- Velux Skylights
- Interior Doors - TruStile, REEB Millwork, Primed Stile & Rail Doors, Simpson
- Exterior/Entry Doors - KML, ThermaTru, TruStile, Signature Door
- Door Slabs & Prehung Doors
- Commercial Steel & Hollow Metal Doors
- Cavity Slider Pocket Door Frames
- Stair Parts
- Marwin Attic Stairs
- Bessler Fire Rated Attic Stairs
- Shutters
- HB&G Columns & Porch Posts
- Larson Storm Doors

DECKING PRODUCTS
- Trex Decking
  - Signature
  - Lineage
  - Transcend
  - Select
  - Enhance
- Trex Deck Fasteners
- Trex RainEscape
- Iron Woods Ipe & Garapa
- Meranti Decking
- Cedar Decking
- Premium Pressure Treated Decking
- Lattice Panel, PVC, Treated, Cedar

RAILING SYSTEMS
- Trex Transcend Rail
- Trex Signature Rail
- Trex Select Aluminum Rail
- Trex Select Rail
- Trex Select T-Rail
- Trex ADA Rail
- Trex Lighting
- RDI Endurance Rail
- Key Link Railing
- Feeney CableRail & DesignRail
- Pressure Treated & Cedar Railing

EXTERIOR BUILDING MATERIALS
- DuPont Tyvek Homewrap / Weatherization
- Henry Blueskin VP100/160
- Henry EaveGuard
- Henry Fortiflash Fusion
- Nichigo G-Tapes
- Quickrete Concrete Mixes
- Lally Columns
- Reinforcing Rods
- Fiber Form Tubes
- Rockwell Window Wells

MOULDING
- KB Classical & Modern Craftsman Poplar Moulding
- Primed Finger Joint Pine Moulding
- Ultralite MDF Moulding
- Flexible, Curved & Radius Moulding
- Custom Hardwood Mouldings
- Kleer PVC Mouldings & Postwraps
- Corner Blocks & Plinth Blocks

HARDWARE & FASTENERS
- Schlage, Baldwin, Emtek, Rocky Mountain
- Commercial Hardware
- Bostitch Coil & Stick Nails
- Simpson Strong-Tie
- Handnails & Screws
- Caulks, Sealants, Fillers
- Power and Hand Tools
- Jobsite and Surface Protection

KITCHEN & BATH CABINETRY
- Stock, Semi-Custom, Full Custom Options
- In-House Designers
- Countertops

Kuiken Brothers Cabinetry Showrooms: Emerson, NJ, Succasunna, NJ, Warwick, NY

INTERIOR BUILDING MATERIALS
- Drywall
- Shaftwall Panels
- Certainteed SilentFX
- Permabase Tile Backer
- Gypsum Tile Backer
- Steel Studs 25, 20, 18 Gauge
- Rockwool AFB Comfortbatt & Comfortboard
- XPS Foam & Insulation Panels
- Tuff-R Insulation
- Certainteed Ceiling Tile & Grid
- FRP Panels & Accessories

COMMERCIAL BUILDING MATERIALS
In-stock at Garfield, Succasunna, Emerson & Newark Locations
- Ceiling Systems
- Suspension Systems
- Drywall
- Joint Compounds
- Metal Studs
- Insulation
- Wall Panels
- Homasote
- Fasteners & Adhesives
- Boom Truck Services (Up to 8 story)

COMMERCIAL DOORS, FRAMES & HARDWARE
- Hollow Metal Doors & Frames
- Wood Doors (Various Veneers & Finishes)
- Commercial Hardware (ASSA ABLOY, Schlage, Falcon, Von Duprin)

SPECIAL ORDERS
If you don’t see it here, just ask. We have a strong network of suppliers and can source just about anything.

ORDERING

KUIKEN BROTHERS MOULDING PROFILES

PRICING & ORDERING: For local projects, contact any location listed on the back of the catalog. For out-of-state inquiries, call (201) 652-1912. Inquiries can be sent to info@kuikenbrothers.com or through our website www.kuikenbrothers.com/moulding

PICK-UP ORDERS: Most profiles are in-stock at all locations. KB Classical & Modern Craftsman Poplar Moulding in-stock in Emerson, Fair Lawn, Newark, Succasunna. Please call to confirm.

DELIVERY: Generally speaking, orders received within a 50 mile radius of a Kuiken Brothers location will be delivered on our own vehicles. All others will be shipped via partner carrier. Minimal shipping & handling fees may apply where applicable.

FLEXIBLE MOULDING: All Kuiken Brothers Moulding profiles can be run in Flexible Moulding for arches, surrounds and curved wall, baseboard and crown moulding applications. Please allow 2-3 week lead time. There are no knife charges for stock profiles.

CUSTOM SPECIES: All Kuiken Brothers stock moulding profiles can be custom run in the species of your choice. Minimal set-up fees may apply.

RETURNS: If we are able to pick up the material on our own vehicle, or if the customer is able to return it to our facility, a 20% re-stocking fee may be charged assuming the material is in good condition.

PRODUCT SAMPLES: Complimentary product samples of our in-stock moulding profiles are available. E-mail info@kuikenbrothers.com or call (201) 652-1912 with the profile number.

CAD FILES: Download all Kuiken Brothers' Moulding profiles in DWG, DXF, SKP, Revit, Chief Architect and PDF format from kuikenbrothers.com/moulding

CATALOG REQUESTS: Copies of our Full Line Moulding, Classical Moulding & Modern Craftsman Moulding Catalogs can be picked up at any of our locations or ordered through our website.

THANK YOU

for considering Kuiken Brothers as your supplier. Whether it's for lumber, doors, windows, trim, millwork, kitchen cabinets, hardware, drywall or acoustical ceilings, Kuiken Brothers has it all. Currently we have five locations with rail siding which permits us to offer you the best quality lumber at competitive pricing, direct from the mills. We value the relationships we have forged over the years and welcome an opportunity to earn your business and be able to keep you as a life-long customer. Please call or visit any of our locations and experience the difference Kuiken Brothers can make in your business.

While we have made every effort to portray each item in this catalog as accurately as possible, it may be that slight variations could occur, or that certain items may be discontinued. Always check current availability with a Kuiken salesperson.

Kuiken Brothers
Company, Incorporated

RESIDENTIAL & COMMERCIAL BUILDING MATERIALS

Since 1912

Locations in New Jersey & New York

Stock Moulding Ships Nationwide

---

(201)652-1000

www.kuikenbrothers.com

RESIDENTIAL & COMMERCIAL BUILDING MATERIALS