ANDERSEN®
WINDOWS & DOORS

100 SERIES

A MODERN LOOK
THAT'S EASY ON THE BUDGET

2024-25 PRODUCT GUIDE FOR PROFESSIONALS

CONTENTS

Performance & Durability 2-3
Fibrex® Material 4-5
Window & Door Types 6-7
Window Frame Options 8-9
Exteriors & Interiors 10
Hardware 11
Glass 13
Grilles & Insect Screens 14
Build Bigger Views 16

100 SERIES WINDOWS

Windows Overview 17
- Casement Windows 20
- Awning Windows 27
- Single-Hung Windows 32
- Gliding Windows 55
- Picture, Transom & Specialty Windows 68

100 SERIES PATIO DOORS

Patio Doors Overview 99
- Gliding Patio Doors 101
- Patio Door Sidelights & Transoms 103

Combination Designs 107
Product Performance 111
Installation Accessories & Information 120
Sustainability 123

For warranty information, visit **andersenwindows.com/warranty**.

ENERGY STAR AWARD 2023
PARTNER OF THE YEAR
Sustained Excellence

Andersen Corporation, including its subsidiaries, has been named a 2023 ENERGY STAR® Partner of the Year – Sustained Excellence Award winner, the highest honor given by ENERGY STAR, for continued leadership in protecting the environment through superior energy efficiency achievements.

"ENERGY STAR" is a registered trademark of the U.S. Environmental Protection Agency.

AMERICA'S MOST LOVED BRAND OF WINDOWS & DOORS*

You want to give your customers a home they love, and we're here to make that easy for you. That's why we're proud to offer you products that rate #1 in quality and performance,** and to be the #1 trusted and recommended window and door brand** by pros.

100 SERIES PRODUCTS

The best way to give your customers a modern look that's within budget and lasts† The 100 Series product line is made from our proprietary Fibrex® material that's energy efficient, environmentally responsible and stronger than vinyl.

*2022 Andersen brand surveys of U.S. realtors, contractors, builders and homeowners.
**2022 Andersen brand surveys of U.S. contractors, builders, architects and homeowners.
†Visit andersenwindows.com/warranty for details.

PERFORMANCE

100 Series products simply perform like modern windows and doors should. They're made from our proprietary Fibrex® material, which is extremely low maintenance and blocks thermal transfer 700 times better than aluminum to help your customers save money on heating and cooling costs.

ATTRACTIVE CORNER SEAMS

Low-visibility corner seams for a cleaner and more modern look.

COLORS THAT LAST

Durable factory-finished interiors and exteriors never need painting and won't fade, flake, blister or peel,* even in extreme cold or heat.

ATTRACTIVE MATTE INTERIORS

Premium matte finish isn't shiny like vinyl and is available in white, Sandtone, dark bronze and black.**

ENERGY EFFICIENT IN EVERY CLIMATE

Energy-efficient 100 Series products are available with options that make them ENERGY STAR® v. 7.0 certified throughout the U.S. so they can help reduce heating and cooling bills.

Visit **andersenwindows.com/energystar** for more information and to verify that the product with your glass option is certified in your area.

ASK ABOUT ENERGY STAR

DESIGNED FOR PERFORMANCE

100 Series products are designed to meet or exceed performance requirements in all 50 states.† See pages 112-113 for details.

PG50††
PERFORMANCE
OPTIONAL PERFORMANCE UPGRADE
100SHS4066 PGUP +50/-50
(AAMA/WDMA/CSA 101/I.S.2/A440-08 & -11)

EASY TO OPERATE FOR YEARS TO COME

All 100 Series products are tested to the extreme to deliver years* of smooth, reliable operation.

SUPERIOR WEATHER RESISTANCE

Our weather-resistant construction seals out drafts, wind and water so well that your reputation is protected whatever the weather.

QUALITY SO SOLID, THE WARRANTY IS TRANSFERABLE*

Many other window and door warranties end when a home is sold, but our coverage – 20 years on glass, 10 years on non-glass parts – transfers from each owner to the next. And because it's not prorated, the coverage offers full benefits year after year, owner after owner. So it can add real value when you decide to sell your home.

OWNER2OWNER®
LIMITED WARRANTY

*Visit andersenwindows.com/warranty for details.
**Products with Sandtone, dark bronze and black interiors have matching exteriors.
†See your local code official for code requirements in your area.
††100SHS4066 PGUP +50/-50 (AAMA/WDMA/CSA 101/I.S.2/A440-08 & -11). Optional PG50 performance grade upgrade is available for most sizes. For more information, visit andersenwindows.com/100series.
"ENERGY STAR" is a registered trademark of the U.S. Environmental Protection Agency.

DURABILITY

Think vinyl, only stronger. The proprietary Fibrex® material in our 100 Series products has all the benefits of vinyl while holding up better to weather and wear. This way your customers' windows and doors are better protected from warping and cracking, even in tough climates*.

FIBREX® MATERIAL 12X THICKER FINISH THAN PAINTED VINYL**

The finish on 100 Series products has superior scratch resistance compared to painted vinyl windows** so they'll look beautiful for years to come.

FIBREX® MATERIAL 2X STRONGER THAN VINYL

Fibrex material retains its stability and rigidity in all climates, delivering exceptional durability. It makes our 100 Series products rigid and strong so the weathertight seals stay weathertight.

FIBREX® MATERIAL WITHSTANDS 150° TEMPERATURES

100 Series products can withstand temperatures up to 150°F, even for dark colors, meaning they won't warp due to sun exposure.

*Visit andersenwindows.com/warranty for details.
**When 100 Series products were tested against five leading competitors' painted vinyl window products.

FIBREX® MATERIAL

Developed by Andersen, Fibrex material is a revolutionary structural composite material that blends the very best attributes of vinyl and wood. Fibrex material saves on natural resources because it's composed of 40% reclaimed wood fiber by weight. Special polymer formulations surround and fill each wood fiber, enabling top performance. The result is a material that provides uncommon value and enhances the quality of any project. In use for over two decades in Andersen® products, Fibrex material has proven its strength and durability in all types of climates.

REVOLUTIONARY BUILDING MATERIAL

- Twice as strong as vinyl so weathertight seals stay weathertight
- Blocks thermal transfer nearly 700 times better than aluminum to help reduce heating and cooling bills
- Retains its stability and rigidity in all climates for exceptional durability
- Offers superior scratch resistance compared to painted vinyl*

ENVIRONMENTALLY RESPONSIBLE

- Since Andersen developed the highly sustainable Fibrex material, reuse of waste wood fiber has prevented the harvesting of nearly 90 million board feet of timber
- 100 Series products can help builders earn LEED® points in three key categories: Energy & Atmosphere, Materials & Resources and Indoor Environmental Quality
- 100 Series products meet or exceed California Section 01350 Specification, a California indoor emission standard – one of the toughest in the country
- Like all Andersen products, 100 Series products are designed to last** and help reduce future waste streams

INDOOR ADVANTAGE GOLD BUILDING MATERIALS

See how Andersen created Fibrex material at **andersenwindows.com/fibrex**.

*Visit andersenwindows.com/warranty for details.
**When tested against five leading competitors' painted vinyl window products.

STABLE & PREDICTABLE

Fibrex® material is twice as stiff as vinyl. This strength makes it a better choice over time.

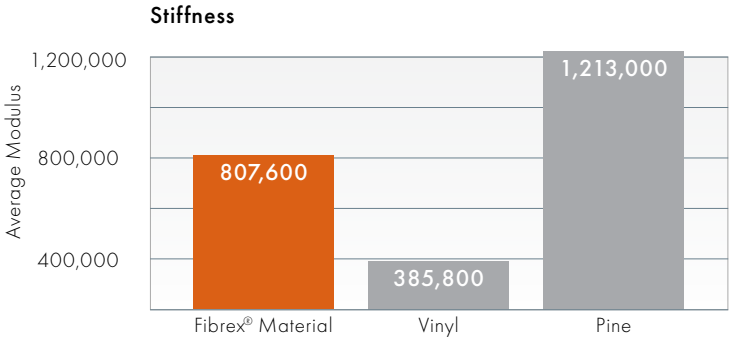

DURABLE & RELIABLE

All materials expand and contract when exposed to extreme temperatures. In these types of conditions, Fibrex material performs twice as well as vinyl, which can bow and crack over time.

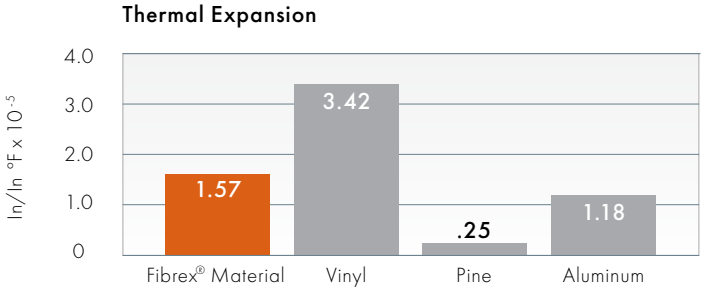

EXCELLENT INSULATOR

The built-in thermal qualities of Fibrex material mean that less heat and cold get transferred through the product into your customers' homes. As an insulator, it's on par with vinyl and far superior to aluminum.

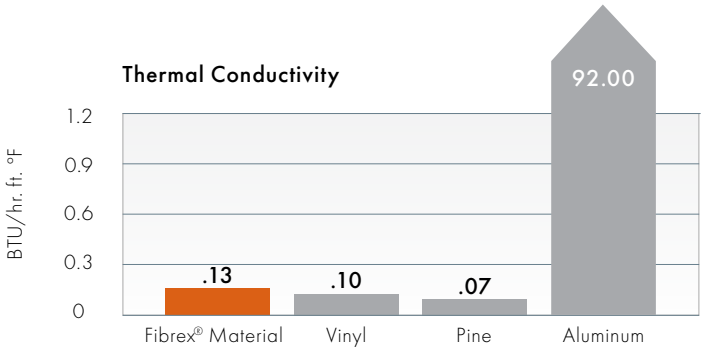

MOISTURE RESISTANT

Because Fibrex material combines wood fiber and a special polymer formula, water has a tough time penetrating. The result is an increased resistance to rot.

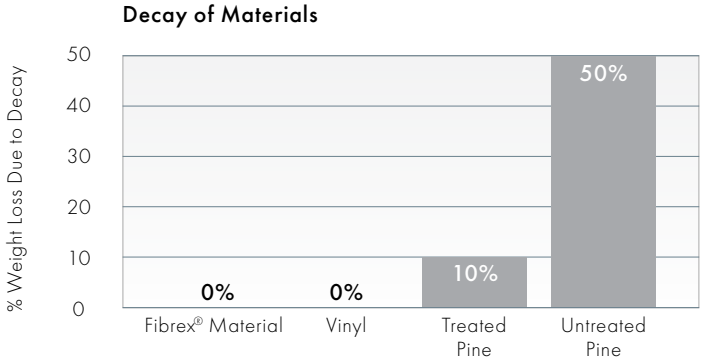

HEAT RESISTANT

Fibrex material can withstand temperatures in excess of 150°F, even for dark colors, making it a great fit for your projects in hot climates.

WINDOW & DOOR TYPES

CASEMENT & AWNING WINDOWS

Casement windows are hinged on the side and open outward to the left or right, while awning windows are hinged at the top and open outward. Both are also available as non-operating stationary windows.

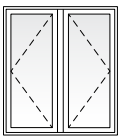

Twin Casement

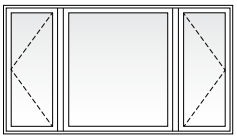

Picture With Flanking Casements

SINGLE-HUNG WINDOWS

Single-hung windows feature a fixed upper sash with an operable lower sash that slides up and down.
For convenience, the hardware locks automatically when the window is closed. An arch single-hung is also available to add architectural interest.

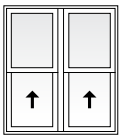

Twin Single-Hung

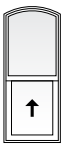

Arch Single-Hung

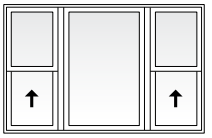

Picture With Flanking Single-Hungs

GLIDING WINDOWS

Gliding windows have one stationary sash and one operating sash that glides horizontally. A three-sash configuration, where two sash glide past a fixed center sash, is also available.

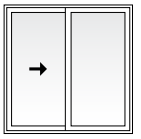

Gliding
Active-Stationary

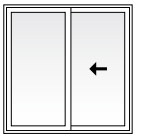

Gliding
Stationary-Active

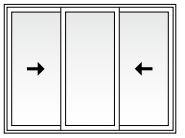

Gliding
Active-Stationary-Active, 1:1:1 Sash Ratio

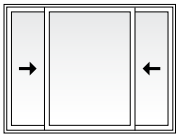

Gliding
Active-Stationary-Active, 1:2:1 Sash Ratio

CUSTOM SIZES

Available in custom sizes to fit all projects.

PICTURE, TRANSOM & SPECIALTY WINDOWS

Choose from a variety of shapes to make a signature statement or provide a delicate lighting accent. Shapes include picture, transom, half circle, quarter circle, circle, Springline™ and arch windows. Custom shapes are also available, including unequal leg arch, trapezoid, pentagon, octagon and triangle windows.

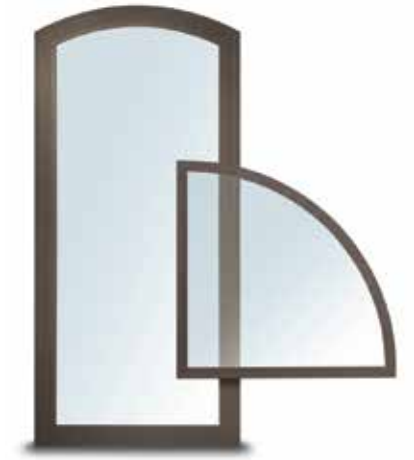

GLIDING PATIO DOORS

Patio doors feature one stationary panel and one operating panel that glides smoothly on adjustable rollers. They feature a multi-point locking system for enhanced security and an optional exterior keyed lock for convenience. Sidelights and transoms are also available.

WINDOW FRAME OPTIONS

You'll find a 100 Series window to match any project from commercial to residential, no matter the location. And with uniform sight lines, it's easy to specify 100 Series products for the entire project. Additionally, 100 Series window frame options offer the flexibility needed to complete everything from new construction to home improvement, and they're available in ⅛" (3) increments when custom sizing is required.

- 3 ⅛" (79) uniform sight lines allow for easy specification
- An extension jamb attachment flange is available for easy application of extension jambs on the job site
- Single-hung drywall pass-through windows have an upper sash that can be easily removed on the job site after the window is installed.* With both sash removed, drywall can easily fit through upper-floor windows.

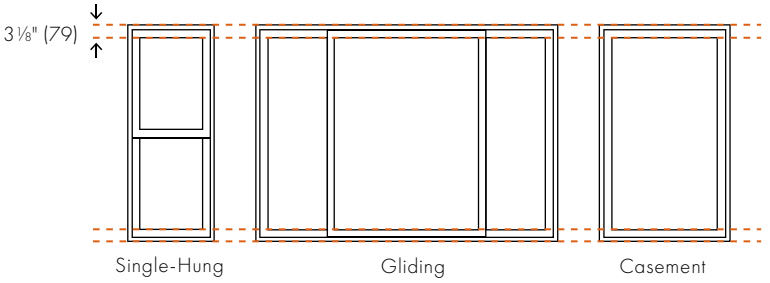

NEW CONSTRUCTION WINDOW FRAME OPTIONS

1⅜" (35) Flange Setback

- Designed for new construction
- Integral installation flange makes installation into a new opening easy and helps make sure the windows and doors are weathertight

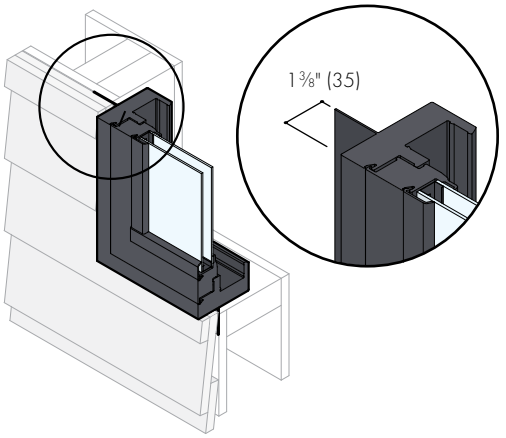

1" (25) Flange Setback With Stucco Key

- For new construction with stucco exteriors
- Stucco key eliminates gaps that can result from the natural contraction of the exterior stucco
- Integral installation flange makes installation into a new opening easy and helps make sure the windows and doors are weathertight

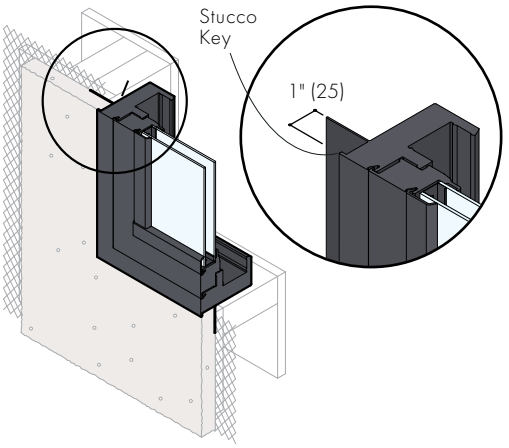

*Optional drywall pass-through window is not available with flush fin frame.
Dimensions in parentheses are in millimeters.

REPLACEMENT WINDOW FRAME OPTIONS

No Flange Frame

- Allows for full removal of an existing window when the existing frame is rotten or damaged
- Installed into the existing rough opening
- Includes pre-drilled, through-the-jamb installation holes and installation screws to save you time

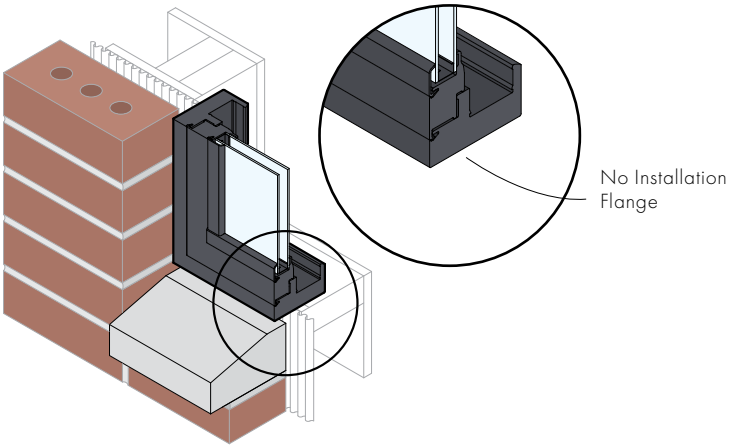

Insert Frame

- Provides fast and easy window replacement when installing into an existing window frame
- Saves time and money with minimal disruption to the interior or exterior trim
- Exterior accessory kerf for convenient finishing of the window
- Installation accessories include an exterior sill extender to fill the gap at the sill (shown) in addition to exterior frame extender for sides and a head expander

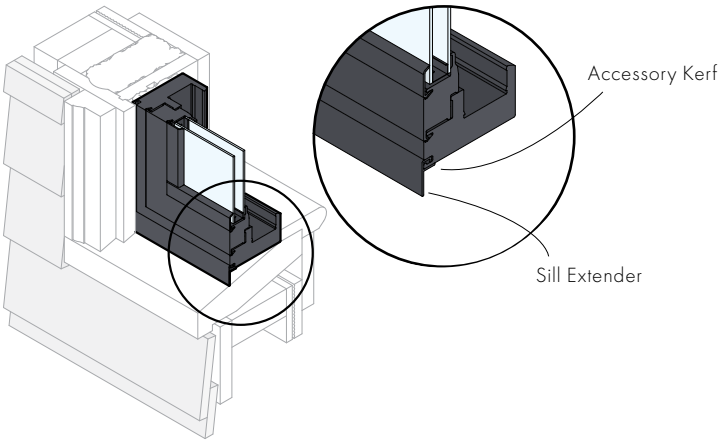

Flush Fin Frame NEW!

- Allows for easy replacement in stucco applications when installing over an existing aluminum window frame
- Minimizes disruption to the home's stucco exterior
- Flush fin has grooves at ½" (13) and 1" (25) for easy trimming
- Flat and curved interior trim is available to cover the existing window frame
- Available in select Southwestern states including Arizona, California, Nevada, New Mexico and Utah. Limited configuration availability. See your Andersen supplier for more information.

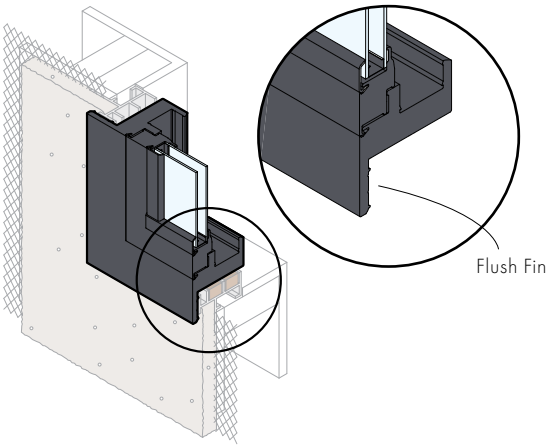

Dimensions in parentheses are in millimeters.

EXTERIORS & INTERIORS

100 Series windows and patio doors come in five exterior colors, including dark bronze and black – colors that are darker and richer than those of most vinyl windows. The interiors feature a premium matte finish for an attractive appearance.

EXTERIOR COLORS

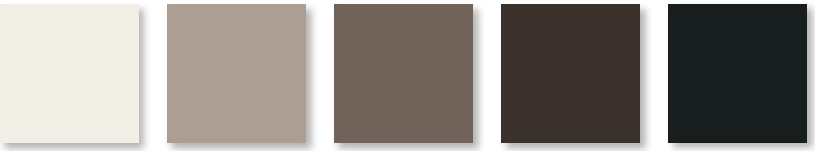

White | Sandtone | Terratone | Dark Bronze | Black

INTERIOR COLORS

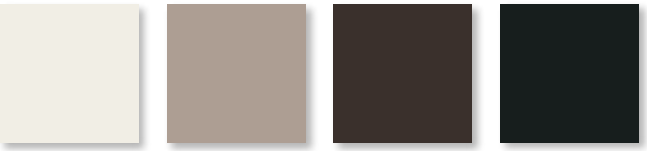

White | Sandtone* | Dark Bronze* | Black*

*Products with Sandtone, dark bronze and black interiors have matching exteriors.
Printing limitations prevent exact duplication of colors. See your Andersen supplier for actual color samples.

HARDWARE

Casement & Awning Windows

Antique Brass | Black | Dark Bronze
Sandtone | **Satin Nickel** | White

Folding handles avoid interference with window treatments.

Single-Hung & Gliding Windows

Standard Lock

Optional Lift/Pull

Hardware color matches the window's interior. Shown in white.
Lock automatically engages when window is closed.

Optional Metal Slim Line Lock

Antique Brass | Black | **Dark Bronze**
Sandtone | Satin Nickel | White

Lock automatically engages when window is closed.

WINDOW HARDWARE FINISHES

Antique Brass

Black

Dark Bronze

Sandtone

Satin Nickel

White

Bold name denotes color or finish shown.

Gliding Patio Doors

TULSA

Standard Handle

Exterior handle color matches the door's exterior. Interior handle color matches the door's interior. Exterior handle shown in dark bronze. Interior handle shown in white.

Optional auxiliary foot lock is available. See page 100.

TULSA HARDWARE FINISHES

Black

Dark Bronze

Sandtone

Terratone*

White

AFTON

Optional Handle

Antique Brass
Black
Bright Brass
Satin Nickel

Optional auxiliary foot lock is available. See page 100.

Bold name denotes color or finish shown.

AFTON HARDWARE FINISHES

Antique Brass

Black

Bright Brass

Satin Nickel

*Available for exterior handle only.

Printing limitation prevent exact replication of colors and finishes.
See your Andersen supplier for actual color and finish samples.

100 SERIES

UNIQUELY ANDERSEN, INCREDIBLY STRONG

GLASS

Andersen has the glass you need to get the performance you want, with options for every climate, project and customer. Check with your supplier for the selections that meet ENERGY STAR® requirements in your area.

GLASS		ENERGY		LIGHT	
		U-Factor How well a product prevents heat from escaping.	**Solar Heat Gain Coefficient** How well a product blocks heat caused by sunlight.	**Visible Light Transmittance** How much visible light comes through a product.	**UV Protection** How well a product blocks ultraviolet rays.
SmartSun™	Thermal control similar to tinted glass, with visible light transmittance similar to Low-E glass.	●●●○	●●●●	●●◐○	●●●●
SmartSun with HeatLock® Coating	Applied to the room-side surface, it reflects heat back into the home and improves U-Factor values.	●●●◐	●●●●	●●◐○	●●●●
Low-E	Outstanding overall performance for climates where both heating and cooling costs are a concern.	●●●○	●●●○	●●●○	●●●○
Low-E with HeatLock Coating	Applied to the room-side surface, it reflects heat back into the home and improves U-Factor values.	●●●◐	●●●○	●●●○	●●●○
Sun	Outstanding thermal control in southern climates where less solar heat gain is desired.	●●●○	●●●●	●○○○	●●●○
PassiveSun®	Ideal for northern, passive solar construction applications where solar heat gain is desired.	●●●○	●○○○	●●●◐	●●○○
PassiveSun with HeatLock Coating	Applied to the room-side surface, it reflects heat back into the home and improves U-Factor values.	●●●◐	●○○○	●●●◐	●●○○
Clear Dual-Pane	High visibility, with basic thermal performance.	●○○○	○○○○	●●●●	○○○○

Center of glass performance only. Ratings based on glass options as of August 2023. Visit andersenwindows.com/energystar for ENERGY STAR map and NFRC total unit performance data.

HEATLOCK TECHNOLOGY

Applied to the room-side glass surface, HeatLock coating reflects heat back into the home for improved performance.

TIME-SAVING FILM

We protect our products during delivery and construction with translucent film on the glass that peels away for a virtually spotless window.

For more details on our glass options, visit **andersenwindows.com/glass**.

ASK ABOUT ENERGY STAR

ADDITIONAL GLASS OPTIONS

Tempered safety glass is standard on patio doors and required for larger window sizes.

Patterned glass lets in light while obscuring vision and adds a unique, decorative touch.

Cascade

Fern

Obscure

Reed

Satin Etch

Cascade and Reed patterns are only available in a vertical orientation.

GLASS SPACER OPTIONS

In addition to stainless steel glass spacers, black glass spacers are available as another way to customize project designs and achieve a contemporary style. Black glass spacers can blend in with the color of the window or door for a sleek design or serve as a shadow line.

Add full divided light grilles and the grille spacer bar between the glass will match.

Black

Stainless Steel

"ENERGY STAR" is a registered trademark of the U.S. Environmental Protection Agency.

GRILLES

Grilles for 100 Series windows and patio doors are available in a wide variety of patterns to complement virtually any style of home. Plus, they have options for easy cleaning and architectural authenticity many vinyl windows can't match.

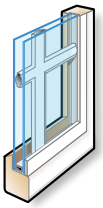

Finelight grilles-between-the-glass

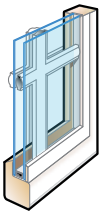

Finelight grilles-between-the-glass with permanent exterior

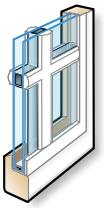

Permanent exterior and permanent interior with spacer

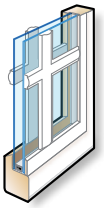

Permanent exterior and permanent interior without spacer

FINELIGHT™ GRILLES-BETWEEN-THE-GLASS

Make glass easy to clean and have an elegant, sculpted profile. Choose a two-sided color scheme to match both the interior and exterior of the window or patio door. Also available with exterior grilles to provide architectural style and detail.

FULL DIVIDED LIGHT

Permanently applied to the exterior and interior of the window, with a spacer between the glass.

SIMULATED DIVIDED LIGHT

Permanently applied to the exterior and interior of the window, without a spacer between the glass.

Grille Bar Widths Actual width shown.

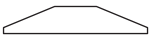

¾" (19) width grille bar for windows.

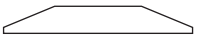

1" (25) width grille bar for patio doors.

A 2 ¼" (57) width grille is available for most units to simulate a meeting rail or a multi-unit combination such as a transom over a window or patio door.

Grille Patterns

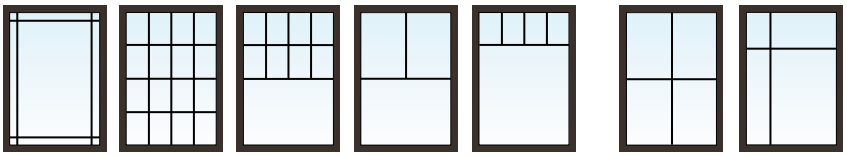

Prairie A | Colonial | Modified Colonial | Tall Fractional | Short Fractional | Specified Equal Light* | Custom

To see all of the standard patterns available for a specific window or door, refer to the detailed product sections in this product guide or contact your Andersen supplier.

INSECT SCREENS

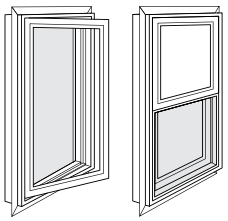

Insect screens for venting windows have a fiberglass screen mesh. Optional TruScene® insect screens are made with a micro-fine stainless steel mesh, providing more than 50% greater clarity than our conventional insect screens. Insect screen frames for casement and awning windows are color matched to the product interior and for single-hung and gliding windows are matched to the product exterior.

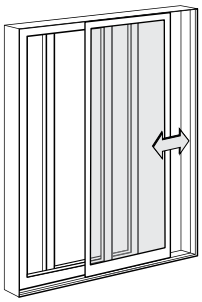

Gliding insect screens for two-panel gliding patio doors have a fiberglass screen mesh. Insect screen frames for doors are color matched to the product exterior.

*Specify number of same-size rectangles across or down.
Dimensions in parentheses are in millimeters.

BUILDERS AGREE

WINDOWS MADE OF ANDERSEN'S FIBREX® COMPOSITE MATERIAL OUTPERFORM VINYL WINDOWS*

*2022 Andersen brand survey of U.S. builders.

AN EASIER WAY TO BUILD BIGGER VIEWS

NEW! FOR PATIO DOORS

Now available for joining patio doors in addition to windows, our unique reinforced fiberglass joining system makes it easier for you to design and install large combinations in your projects. The Easy Connect Joining System uses strong fiberglass construction – for windows, choose from three options: fully assembled factory-joined combinations, partially assembled factory-prepped combinations or field join kits; patio doors use field join kits. For windows, non-reinforced joining options include factory-joined combinations or field join kits. For more information, visit **andersenwindows.com/joining**.

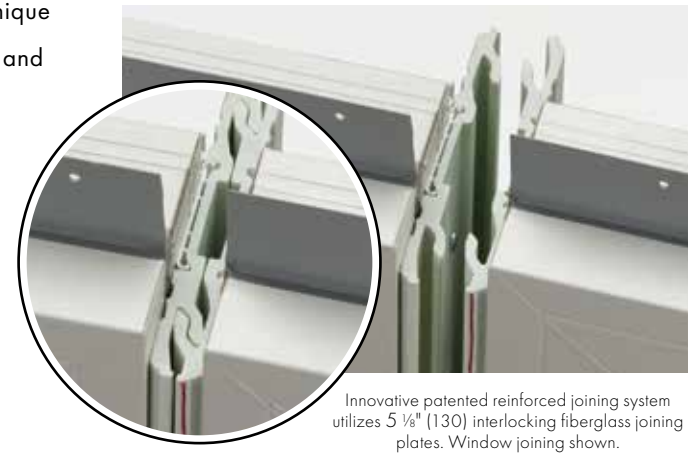

Innovative patented reinforced joining system utilizes 5 ⅛" (130) interlocking fiberglass joining plates. Window joining shown.

Reinforced Factory-Joined Window Combinations

Eliminate the need for job site assembly and receive fully assembled, factory-joined window combinations to fit rough openings up to 12' (3658) x 8' (2438) or 8' (2438) x 12' (3658).

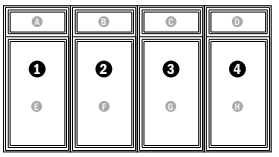

Reinforced Factory-Prepped Window Combinations

Receive lighter, easier-to-handle, pre-assembled smaller window combinations that join as you install them into the rough opening, making it easier to install large combinations. In fact, most contractors surveyed said they could reduce the number of installers by 50% using the Andersen® Easy Connect Joining System.*

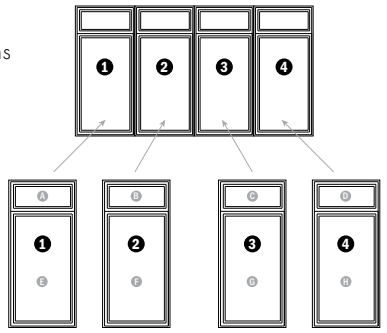

Reinforced & Non-Reinforced Window Interiors

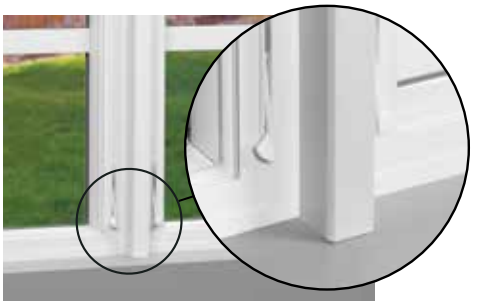

Appearance of a reinforced join.

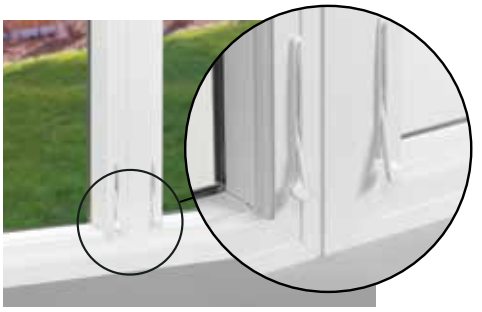

Appearance of a non-reinforced join.

	ASSEMBLY	READY TO INSTALL	NUMBER OF INSTALLERS*	HALLMARK CERTIFIED**	TESTED TO AAMA 450	PERFORMANCE	COMBINATION SIZE LIMITATIONS
REINFORCED FACTORY-JOINED WINDOW COMBINATIONS	FACTORY	●	MORE	●	●	Extensive unit combination size options available certified to PG50**	Maximum join length: 12' Maximum combination: 12' x 8' or 8' x 12' 96 sq. ft. or 8.92 m²
REINFORCED FACTORY-PREPPED WINDOW COMBINATIONS	IN THE OPENING	●	FEWER	●	●	Extensive unit combination size options available certified to PG50**	Maximum join length: 12' Maximum combination height: 16" No maximum width
REINFORCED FIELD JOIN KITS	JOB SITE		MORE	●	●	Extensive unit combination size options available certified to PG50**	Maximum join length: 12' Maximum combination: 16' x 9' or 12' x 12' 144 sq. ft. or 13.34 m²
NON-REINFORCED FACTORY-JOINED WINDOW COMBINATIONS	FACTORY	●	MORE	●	●	Extensive unit combination size options available certified up to PG50**	Maximum join length: 8' Maximum combination: 12' x 8' or 8' x 12' 96 sq. ft. or 8.92 m²
NON-REINFORCED FIELD JOIN KITS	JOB SITE		MORE	●	●	Extensive unit combination size options available certified up to PG50**	Maximum join length: 8' Maximum combination: 12' x 8' or 8' x 12' 96 sq. ft. or 8.92 m²

*69% of 156 builders/general contractors in a 2018 survey said they could reduce the number of installers by half using the Easy Connect Joining System when comparing the installation of a 12' (3658) wide x 8' (2438) high pre-assembled window combination unit with four 3' (914) wide x 8' (2438) high window combination units.

**Easy Connect and other fiberglass joins are certified up to PG50 when installed according to Andersen installation instructions.

Dimensions in parentheses are in millimeters.

Structural performance of any combination is only as high as the lowest structural performance of any individual unit or joining material in the combination.

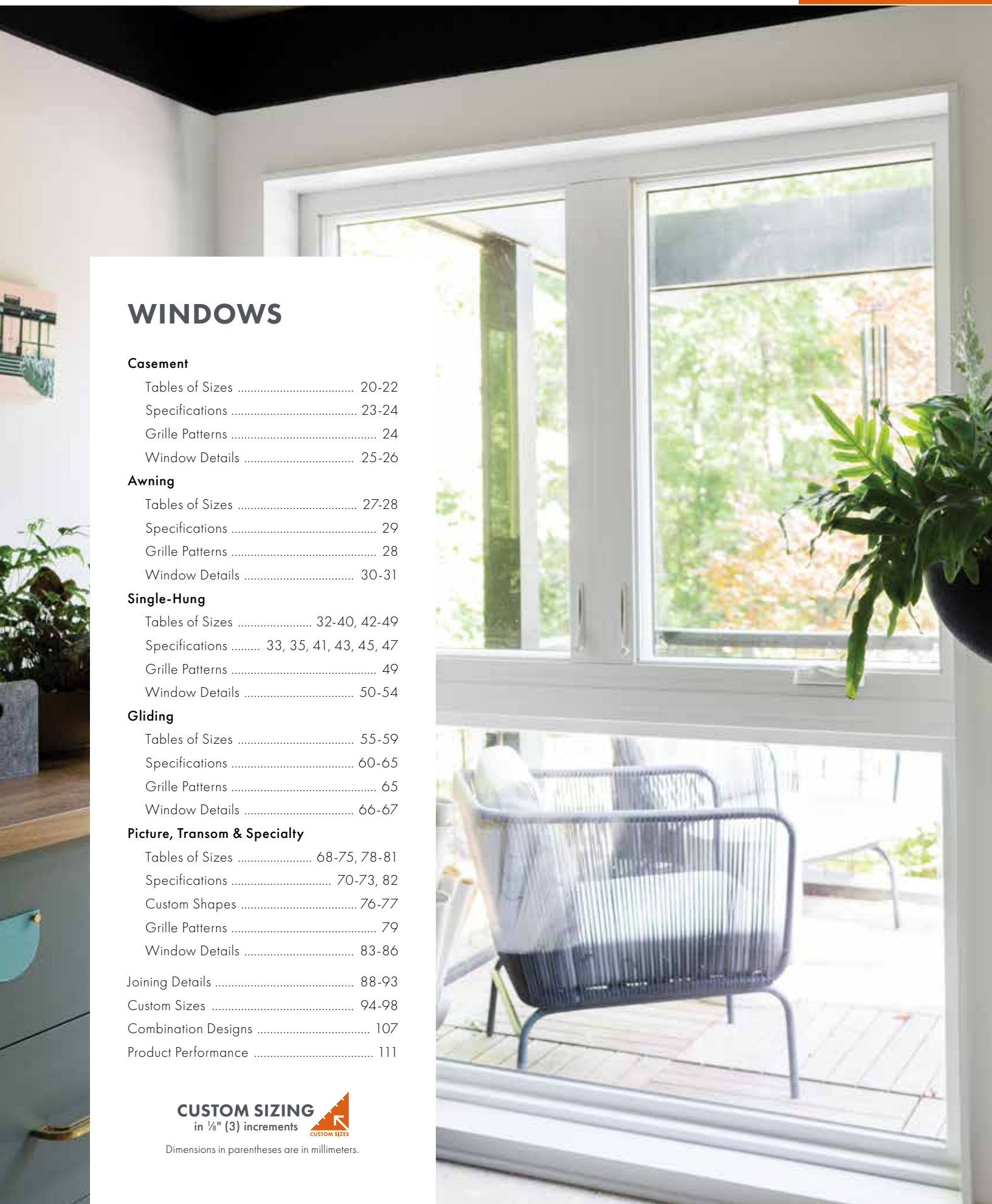

WINDOWS

Casement

Tables of Sizes 20-22
Specifications 23-24
Grille Patterns 24
Window Details 25-26

Awning

Tables of Sizes 27-28
Specifications 29
Grille Patterns 28
Window Details 30-31

Single-Hung

Tables of Sizes 32-40, 42-49
Specifications 33, 35, 41, 43, 45, 47
Grille Patterns 49
Window Details 50-54

Gliding

Tables of Sizes 55-59
Specifications 60-65
Grille Patterns 65
Window Details 66-67

Picture, Transom & Specialty

Tables of Sizes 68-75, 78-81
Specifications 70-73, 82
Custom Shapes 76-77
Grille Patterns 79
Window Details 83-86

Joining Details 88-93
Custom Sizes 94-98
Combination Designs 107
Product Performance 111

CUSTOM SIZING
in ⅛" (3) increments

CUSTOM SIZES

Dimensions in parentheses are in millimeters.

FEATURES

CASEMENT & AWNING

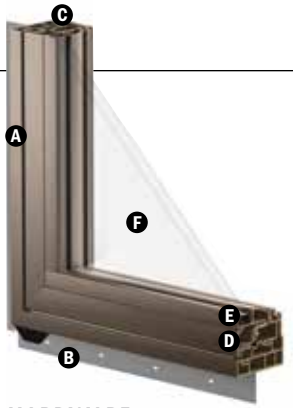

FRAME

A Constructed with Fibrex® composite material. This construction produces a rigid frame. The durable, low-maintenance finish won't fade, flake, blister or peel.*

Concealed receiving brackets mounted on the hinge side of the frame keep the sash tightly secured within the window frame when closed.

B See Common Features for frame options.

SASH

C Fibrex material construction provides long-lasting performance.* The sash, finished with a durable capping, provides maximum protection and a low-maintenance matte finish.

D The dual weatherstrip system combines both an exterior watershed design and a bulb weatherstrip seal between the sash and frame. The result is a long-lasting,* energy-efficient barrier against wind, water and dust.

GLASS

E A glazing bead and silicone provide superior weathertightness and durability.

F See Common Features for glass options.

HARDWARE

Sash operator provides easy to operate opening and closing, regardless of window size. Long-lasting stainless steel hinge channels are used at the head and sill to provide easy operation.

Single-Action Casement Sash Lock

A single-action lock easily releases all concealed locking points on the casement sash. The color or finish of the lock hardware matches the handle.

Awning Sash Locks

Awning sash locks provide an added measure of security and weathertightness. The standard sash lock matches the window's interior color.

SINGLE-HUNG

FRAME

A Constructed with Fibrex® composite material. This construction produces a rigid frame. The durable, low-maintenance finish won't fade, flake, blister or peel.*

B A durable side-loaded balancer provides for easy sash opening and closing. The lower sash can be removed without the use of tools.

C Weep holes are located on the exterior nose of the sill for proper water management.

D See Common Features for frame options.

SASH

The lower sash has a meeting rail cover with a unique raised profile design, allowing the sash to be opened and closed easily.

E Fibrex material construction provides long-lasting performance.* The sash, finished with a durable capping, provides maximum protection and a matte low-maintenance finish.

F Dual felt weatherstrip provides a long-lasting,* energy-efficient barrier against wind, water and dust.

GLASS

G A glazing bead and silicone provide superior weathertightness and durability.

H See Common Features for glass options.

HARDWARE

Sash Lock

The sash lock engages automatically when the lower sash is closed. The standard sash lock matches the window's interior color.

SHAPES & SASH OPTIONS

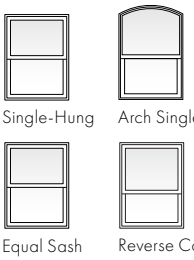

COMMON FEATURES

FRAME

Five frame options include:

- 1 3/8" (35) flange setback for new construction siding applications.
- 1" (25) flange setback with stucco key for new construction stucco applications.
- No flange for full removal and replacement of an existing window when the existing frame is rotten or damaged.
- Insert for window replacement into an existing window frame.
- Flush fin** for stucco applications when installing over an existing aluminum window frame.

For frame drawings and more detailed information, see pages 8-9.

GLASS

Glass spacers are available in stainless steel and black.

High-Performance options include:

- Low-E SmartSun™ glass
- Low-E SmartSun HeatLock® glass
- Low-E glass
- Low-E HeatLock glass
- Low-E Sun glass
- Low-E PassiveSun® glass
- Low-E PassiveSun HeatLock glass
- Clear dual-pane glass

Tempered, [redacted] and other glass options are available. Contact your Andersen supplier.

A removable translucent film helps shield the glass from damage during delivery and construction, and simplifies finishing at the job site.

Patterned Glass

Patterned glass options are available. See page 13 for more details.

PERFORMANCE OPTIONS

Performance Grade (PG) Upgrades

PG upgrades are available for select sizes of standard non-impact windows, allowing units to achieve PG50. PG ratings are more comprehensive than Design Pressure (DP) ratings for measuring product performance. Choosing the PG50 upgrade doesn't change the appearance of the unit. For up-to-date performance ratings, visit **andersenwindows.com**.

EXTERIORS & INTERIORS

EXTERIOR COLORS

INTERIOR COLORS

*Visit andersenwindows.com/warranty for details.

**Available in select Southwestern states including Arizona, California, Nevada, New Mexico and Utah. Limited configuration availability. See your Andersen supplier for more information.

†Products with Sandtone, dark bronze and black interiors have matching exteriors.

Printing limitations prevent exact duplication of colors. See your Andersen supplier for actual color samples.

Dimensions in parentheses are in millimeters.

GLIDING

FRAME

A Constructed with Fibrex® composite material. This construction produces a rigid frame. The durable, low-maintenance finish won't fade, flake, blister or peel.*

B See Common Features for frame options.

SASH

The operating sash has a meeting stile cover with a unique raised profile design, allowing the sash to be opened and closed easily.

C Fibrex material construction provides long-lasting performance.* The sash, finished with a durable capping, provides maximum protection and a matte low-maintenance finish.

D Dual felt weatherstrip provides a long-lasting,* energy-efficient barrier against wind, water and dust.

E Operating sash has four metal rollers mounted at the bottom for easy, smooth travel over the sill.

GLASS

F A glazing bead and silicone provide superior weathertightness and durability.

G See Common Features for glass options.

HARDWARE

Sash Lock

The sash lock engages automatically when the operable sash is closed. The standard sash lock matches the window's interior color.

PICTURE, TRANSOM & SPECIALTY

FRAME

A Constructed with Fibrex® composite material. This construction produces a rigid frame. The durable, low-maintenance finish won't fade, flake, blister or peel.*

B See Common Features for frame options.

GLASS

C A glazing bead and silicone provide superior weathertightness and durability.

D See Common Features for glass options.

SHAPES

Along with rectangular windows, half circle, quarter circle, circle, Springline™ and arch windows are available in both standard and custom sizes. Custom windows are also available in unequal leg arch, trapezoid, pentagon, octagon and triangle shapes.

HARDWARE

Casement & Awning

Antique Brass
Black
Dark Bronze
Sandtone
Satin Nickel
White

Folding handles avoid interference with window treatments.

Single-Hung & Gliding

Standard Lock

Optional Lift/Pull

Hardware color matches the window's interior.
Shown in white.

Optional Metal Slim Line Lock

Antique Brass | Black | **Dark Bronze**
Sandtone | Satin Nickel | White

Bold name denotes color or finish shown.

HARDWARE FINISHES

Antique Brass | Black | Dark Bronze | Sandtone | Satin Nickel | White

ACCESSORIES Sold Separately

HARDWARE

Window Opening Control Device

A window opening control device is available for casement, single-hung and gliding windows, which limits sash travel to less than 4" (102) when the window is first opened. Available factory applied, or as a field-applied kit in stone, white and black.

Vent Limiter for Awning Windows

A vent limiter is available for awning windows, which prevents opening the sash more than 4" (102). Available factory applied or as a field-applied kit.

GRILLES

Grilles are available in a variety of configurations. See page 14 for details.

INSECT SCREENS

Conventional Insect Screens

Insect screens have charcoal gray fiberglass screen mesh. For casement and awning windows, frames are color matched to the product interior. For single-hung and gliding windows, stainless steel springs hold the insect screen tightly to the window frame, and their frames are available in colors to match the product's exterior.

TruScene® Insect Screens

Our TruScene insect screens let in over 25% more fresh air** and provide 50% greater clarity than conventional Andersen insect screens, all while keeping out unwanted small insects. For casement and awning windows, the frame color matches the product interior. For single-hung and gliding windows, the frame color matches the product's exterior.

*Visit andersenwindows.com/warranty for details.
**TruScene insect screens let in over 25% more fresh air than standard Andersen fiberglass insect screens.

Dimensions in parentheses are in millimeters.
Printing limitations prevent exact replication of colors and finishes. See your Andersen supplier for actual color and finish samples.

Table of Casement Window Sizes

Scale 1/8" (3) = 1'-0" (305) — 1:96

Window Dimension	1'-5 1/2" (445)	1'-11 1/2" (597)	2'-5 1/2" (749)	2'-11 1/2" (902)
Minimum Rough Opening	1'-6" (457)	2'-0" (610)	2'-6" (762)	3'-0" (914)
Unobstructed Glass	11 1/4" (286)	17 1/4" (438)	23 1/4" (591)	29 1/4" (743)

CUSTOM WIDTHS — 17 1/2" to 35 1/2"

CUSTOM HEIGHTS — 23 1/2" to 71 1/2"

1'-11 1/2" (597)	2'-0" (610)	17 1/4" (438)	1620	2020	2620	3020
2'-5 1/2" (749)	2'-6" (762)	23 1/4" (591)	1626	2026	2626	3026
2'-11 1/2" (902)	3'-0" (914)	29 1/4" (743)	1630	2030	2630	3030
3'-5 1/2" (1054)	3'-6" (1067)	35 1/4" (895)	1636	2036	2636	3036◊
3'-11 1/2" (1207)	4'-0" (1219)	41 1/4" (1048)	1640	2040	2640◊	3040◊
4'-5 1/2" (1359)	4'-6" (1372)	47 1/4" (1200)	1646	2046	2646◊	3046◊
4'-11 1/2" (1511)	5'-0" (1524)	53 1/4" (1353)	1650	2050	2650◊	3050◊
5'-5 1/2" (1664)	5'-6" (1676)	59 1/4" (1505)	1656	2056	2656◊	3056◊
5'-11 1/2" (1816)	6'-0" (1829)	65 1/4" (1657)	1660	2060	2660◊	3060◊

Custom-size windows are available in 1/8" (3) increments.

See page 94 for custom sizes and specifications.

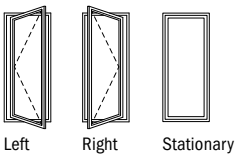

Left Right Stationary

Choose left, right or stationary as viewed from the exterior.

Grille patterns shown on page 24. Details shown on pages 25-26.

• Window Dimension always refers to outside frame-to-frame dimension.
• **Minimum Rough Opening dimensions may need to be increased to allow for use of building wraps, flashing, sill panning, brackets, fasteners or other items. See page 121 for more details.**
• Dimensions in parentheses are in millimeters.
◊ Meets or exceeds clear opening area of 5.7 sq. ft. or 0.53 m², clear opening width of 20" (508) and clear opening height of 24" (610) with appropriate hinge specified. See table on page 23.

Table of Twin Casement Window Sizes

Scale 1/8" (3) = 1'-0" (305) – 1:96

Window Dimension	2'-11 1/2" (902)	3'-5 1/2" (1054)	3'-11 1/2" (1207)	4'-5 1/2" (1359)	4'-11 1/2" (1511)	5'-5 1/2" (1664)	5'-11 1/2" (1816)
Minimum Rough Opening	3'-0" (914)	3'-6" (1067)	4'-0" (1219)	4'-6" (1372)	5'-0" (1524)	5'-6" (1676)	6'-0" (1829)
Unobstructed Glass (width of single sash)	11 1/4" (286)	14 1/4" (362)	17 1/4" (438)	20 1/4" (514)	23 1/4" (591)	26 1/4" (667)	29 1/4" (743)

Height	2'-11 1/2"	3'-5 1/2"	3'-11 1/2"	4'-5 1/2"	4'-11 1/2"	5'-5 1/2"	5'-11 1/2"
11 1/2" (292) / 1'-0" (305) / 5 1/4" (133)	1610-2	1910-2	2010-2	2310-2	2610-2	2910-2	3010-2
1'-5 1/2" (445) / 1'-6" (457) / 11 1/4" (286)	1616-2	1916-2	2016-2	2316-2	2616-2	2916-2	3016-2
1'-11 1/2" (597) / 2'-0" (610) / 17 1/4" (438)	1620-2	1920-2	2020-2	2320-2	2620-2	2920-2	3020-2
CUSTOM WIDTHS – 35 1/2" to 71 1/2"							
1'-11 1/2" (597) / 2'-0" (610) / 17 1/4" (438)	1620-2	1920-2	2020-2	2320-2	2620-2	2920-2	3020-2
2'-5 1/2" (749) / 2'-6" (762) / 23 1/4" (591)	1626-2	1926-2	2026-2	2326-2	2626-2	2926-2	3026-2
2'-11 1/2" (902) / 3'-0" (914) / 29 1/4" (743)	1630-2	1930-2	2030-2	2330-2	2630-2	2930-2	3030-2
3'-5 1/2" (1054) / 3'-6" (1067) / 35 1/4" (895)	1636-2	1936-2	2036-2	2336-2	2636-2	2936-2◊	3036-2◊
3'-11 1/2" (1207) / 4'-0" (1219) / 41 1/4" (1048)	1640-2	1940-2	2040-2	2340-2	2640-2◊	2940-2◊	3040-2◊
4'-5 1/2" (1359) / 4'-6" (1372) / 47 1/4" (1200)	1646-2	1946-2	2046-2	2346-2	2646-2◊	2946-2◊	3046-2◊
4'-11 1/2" (1511) / 5'-0" (1524) / 53 1/4" (1353)	1650-2	1950-2	2050-2	2350-2	2650-2◊	2950-2◊	3050-2◊
5'-5 1/2" (1664) / 5'-6" (1676) / 59 1/4" (1505)	1656-2	1956-2	2056-2	2356-2	2656-2◊	2956-2◊	3056-2◊
5'-11 1/2" (1816) / 6'-0" (1829) / 65 1/4" (1657)	1660-2	1960-2	2060-2	2360-2	2660-2◊	2960-2◊	3060-2◊

CUSTOM HEIGHTS – 23 1/2" to 71 1/2"

Custom-size windows are available in 1/8" (3) increments. See page 94 for custom sizes and specifications.

Choose left, right or stationary as viewed from the exterior. In addition to venting shown, other standard configurations are available. Windows have one continuous outer frame.

Matching transom windows are also shown. See Picture, Transom & Specialty Windows section starting on page 68 for more information.

Grille patterns shown on page 24. Details shown on pages 25-26.

- Window Dimension always refers to outside frame-to-frame dimension.
- **Minimum Rough Opening dimensions may need to be increased to allow for use of building wraps, flashing, sill panning, brackets, fasteners or other items. See page 121 for more details.**
- Dimensions in parentheses are in millimeters.

◊ Meets or exceeds clear opening area of 5.7 sq. ft. or 0.53 m², clear opening width of 20" (508) and clear opening height of 24" (610) with appropriate hinge specified. See table on pages 23-24.

Table of Picture Window With Flanking Casements Sizes

Scale 1/8" (3) = 1'-0" (305) – 1:96

Window Dimension	5'-11 1/2" (1816)	7'-11 1/2" (2426)	9'-11 1/2" (3035)	11'-11 1/2" (3645)
Minimum Rough Opening	6'-0" (1829)	8'-0" (2438)	10'-0" (3048)	12'-0" (3658)
Unobstructed Glass (width of center sash)	29 1/4" (743)	41 1/4" (1048)	53 1/4" (1353)	65 1/4" (1657)
Unobstructed Glass (width of single flanking sash)	11 1/2" (286)	17 1/4" (438)	23 1/4" (591)	29 1/4" (743)

11 1/2" (292)	1'-0" (305)	5 1/4" (133)	16-3010-16	20-4010-20	26-5010-26	30-6010-30
1'-5 1/2" (445)	1'-6" (457)	11 1/4" (286)	16-3016-16	20-4016-20	26-5016-26	30-6016-30
1'-11 1/2" (597)	2'-0" (610)	17 1/4" (438)	16-3020-16	20-4020-20	26-5020-26	30-6020-30
1'-11 1/2" (597)	2'-0" (610)	17 1/4" (438)	16-3020-16	20-4020-20	26-5020-26	30-6020-30
2'-5 1/2" (749)	2'-6" (762)	23 1/4" (591)	16-3026-16	20-4026-20	26-5026-26	30-6026-30
2'-11 1/2" (902)	3'-0" (914)	29 1/4" (743)	16-3030-16	20-4030-20	26-5030-26	30-6030-30
3'-5 1/2" (1054)	3'-6" (1067)	35 1/4" (895)	16-3036-16	20-4036-20	26-5036-26	30-6036-30◊
3'-11 1/2" (1207)	4'-0" (1219)	41 1/4" (1048)	16-3040-16	20-4040-20	26-5040-26◊	30-6040-30◊
4'-5 1/2" (1359)	4'-6" (1372)	47 1/4" (1200)	16-3046-16	20-4046-20	26-5046-26◊	30-6046-30◊
4'-11 1/2" (1511)	5'-0" (1524)	53 1/4" (1353)	16-3050-16	20-4050-20	26-5050-26◊	30-6050-30◊
5'-5 1/2" (1664)	5'-6" (1676)	59 1/4" (1505)	16-3056-16	20-4056-20	26-5056-26◊	30-6056-30◊
5'-11 1/2" (1816)	6'-0" (1829)	65 1/4" (1657)	16-3060-16	20-4060-20	26-5060-26◊	30-6060-30◊

Choose left, right or stationary as viewed from the exterior. In addition to venting shown, other standard configurations are available. Windows have one continuous outer frame.

Matching transom windows are also shown. See Picture, Transom & Specialty Windows section starting on page 68 for more information.

Grille patterns shown on page 24. Details shown on pages 25-26.

- Window Dimension always refers to outside frame-to-frame dimension.
- **Minimum Rough Opening dimensions may need to be increased to allow for use of building wraps, flashing, sill panning, brackets, fasteners or other items. See page 121 for more details.**
- Dimensions in parentheses are in millimeters.

◊ Meets or exceeds clear opening area of 5.7 sq. ft. or 0.53 m², clear opening width of 20" (508) and clear opening height of 24" (610) with appropriate hinge specified. See table on pages 23-24.

Casement Window Opening and Area Specifications

Window Number	Clear Opening Area Sq. Ft./(m²)	Clear Opening in Full Open Position Width Inches/(mm)	Clear Opening in Full Open Position Height Inches/(mm)	Glass Area Sq. Ft./(m²)	Vent Area Sq. Ft./(m²)	Top of Subfloor to Top of Inside Sill Stop Inches/(mm)	Overall Window Area Sq. Ft./(m²)	Default Hinge Type*
1620	0.67 (0.06)	5 3/8" (137)	17 13/16" (452)	1.35 (0.13)	1.46 (0.14)	61 9/16" (1564)	2.86 (0.27)	wash mode
1626	0.89 (0.08)	5 3/8" (137)	23 13/16" (605)	1.82 (0.17)	1.95 (0.18)	55 9/16" (1411)	3.59 (0.33)	wash mode
1630	1.12 (0.10)	5 3/8" (137)	29 13/16" (757)	2.29 (0.21)	2.44 (0.23)	49 9/16" (1259)	4.31 (0.40)	wash mode
1636	1.34 (0.12)	5 3/8" (137)	35 13/16" (909)	2.75 (0.26)	2.94 (0.27)	43 9/16" (1106)	5.04 (0.47)	wash mode
1640	1.57 (0.15)	5 3/8" (137)	41 13/16" (1062)	3.22 (0.30)	3.43 (0.32)	37 9/16" (954)	5.77 (0.54)	wash mode
1646	1.79 (0.17)	5 3/8" (137)	47 13/16" (1214)	3.69 (0.34)	3.92 (0.36)	31 9/16" (802)	6.50 (0.60)	wash mode
1650	2.02 (0.19)	5 3/8" (137)	53 13/16" (1367)	4.16 (0.39)	4.41 (0.41)	25 9/16" (649)	7.23 (0.67)	wash mode
1656	2.24 (0.21)	5 3/8" (137)	59 13/16" (1519)	4.63 (0.43)	4.90 (0.46)	19 9/16" (497)	7.96 (0.74)	wash mode
1660	2.47 (0.23)	5 3/8" (137)	65 13/16" (1671)	5.10 (0.47)	5.40 (0.50)	13 9/16" (344)	8.69 (0.81)	wash mode
2020	1.41 (0.13)	11 3/8" (289)	17 13/16" (452)	2.07 (0.19)	2.20 (0.20)	61 9/16" (1564)	3.84 (0.36)	wash mode
2026	1.88 (0.18)	11 3/8" (289)	23 13/16" (605)	2.79 (0.26)	2.94 (0.27)	55 9/16" (1411)	4.81 (0.45)	wash mode
2030	2.36 (0.22)	11 3/8" (289)	29 13/16" (757)	3.50 (0.33)	3.69 (0.34)	49 9/16" (1259)	5.79 (0.54)	wash mode
2036	2.83 (0.26)	11 3/8" (289)	35 13/16" (909)	4.22 (0.39)	4.43 (0.41)	43 9/16" (1106)	6.77 (0.63)	wash mode
2040	3.31 (0.31)	11 3/8" (289)	41 13/16" (1062)	4.94 (0.46)	5.17 (0.48)	37 9/16" (954)	7.75 (0.72)	wash mode
2046	3.78 (0.35)	11 3/8" (289)	47 13/16" (1214)	5.66 (0.53)	5.91 (0.55)	31 9/16" (802)	8.73 (0.81)	wash mode
2050	4.26 (0.40)	11 3/8" (289)	53 13/16" (1367)	6.38 (0.59)	6.65 (0.62)	25 9/16" (649)	9.71 (0.90)	wash mode
2056	4.73 (0.44)	11 3/8" (289)	59 13/16" (1519)	7.10 (0.66)	7.40 (0.69)	19 9/16" (497)	10.69 (0.99)	wash mode
2060	5.21 (0.48)	11 3/8" (289)	65 13/16" (1671)	7.82 (0.73)	8.14 (0.76)	13 9/16" (344)	11.67 (1.08)	wash mode
2620	2.15 (0.20)	17 3/8" (442)	17 13/16" (452)	2.79 (0.26)	2.94 (0.27)	61 9/16" (1564)	4.81 (0.45)	wash mode
2626	2.88 (0.27)	17 3/8" (442)	23 13/16" (605)	3.75 (0.35)	3.94 (0.37)	55 9/16" (1411)	6.04 (0.56)	wash mode
2630	3.60 (0.33)	17 3/8" (442)	29 13/16" (757)	4.72 (0.44)	4.93 (0.46)	49 9/16" (1259)	7.27 (0.68)	wash mode
2636	4.33 (0.40)	17 3/8" (442)	35 13/16" (909)	5.69 (0.53)	5.92 (0.55)	43 9/16" (1106)	8.50 (0.79)	wash mode
2640 ◊	6.30 (0.59)	21 11/16" (551)	41 13/16" (1062)	6.66 (0.62)	6.91 (0.64)	37 9/16" (954)	9.73 (0.90)	widest clear opening
2646 ◊	7.21 (0.67)	21 11/16" (551)	47 13/16" (1214)	7.63 (0.71)	7.90 (0.73)	31 9/16" (802)	10.96 (1.02)	widest clear opening
2650 ◊	8.11 (0.75)	21 11/16" (551)	53 13/16" (1367)	8.60 (0.80)	8.90 (0.83)	25 9/16" (649)	12.19 (1.13)	widest clear opening
2656 ◊	9.02 (0.84)	21 11/16" (551)	59 13/16" (1519)	9.57 (0.89)	9.89 (0.92)	19 9/16" (497)	13.42 (1.25)	widest clear opening
2660 ◊	9.92 (0.92)	21 11/16" (551)	65 13/16" (1671)	10.54 (0.98)	10.88 (1.01)	13 9/16" (344)	14.65 (1.36)	widest clear opening
3020	2.89 (0.27)	23 3/8" (594)	17 13/16" (452)	3.50 (0.33)	3.69 (0.34)	61 9/16" (1564)	5.79 (0.54)	wash mode
3026	3.87 (0.36)	23 3/8" (594)	23 13/16" (605)	4.72 (0.44)	4.93 (0.46)	55 9/16" (1411)	7.27 (0.68)	wash mode
3030	4.84 (0.45)	23 3/8" (594)	29 13/16" (757)	5.94 (0.55)	6.17 (0.57)	49 9/16" (1259)	8.75 (0.81)	wash mode
3036 ◊	5.82 (0.54)	23 3/8" (594)	35 13/16" (909)	7.16 (0.67)	7.41 (0.69)	43 9/16" (1106)	10.23 (0.95)	wash mode
3040 ◊	6.79 (0.63)	23 3/8" (594)	41 13/16" (1062)	8.38 (0.78)	8.65 (0.80)	37 9/16" (954)	11.71 (1.09)	wash mode
3046 ◊	7.77 (0.72)	23 3/8" (594)	47 13/16" (1214)	9.60 (0.89)	9.90 (0.92)	31 9/16" (802)	13.19 (1.23)	wash mode
3050 ◊	8.74 (0.81)	23 3/8" (594)	53 13/16" (1367)	10.82 (1.00)	11.14 (1.03)	25 9/16" (649)	14.67 (1.36)	wash mode
3056 ◊	9.72 (0.90)	23 3/8" (594)	59 13/16" (1519)	12.04 (1.12)	12.38 (1.15)	19 9/16" (497)	16.15 (1.50)	wash mode
3060 ◊	10.69 (0.99)	23 3/8" (594)	65 13/16" (1671)	13.25 (1.23)	13.62 (1.27)	13 9/16" (344)	17.63 (1.64)	wash mode

• Top of Subfloor to Top of Inside Sill Stop is calculated based upon a structural header height of 6'-10 1/2" (2096).
• Dimensions in parentheses are in millimeters or square meters.
◊ Meets or exceeds clear opening area of 5.7 sq. ft. or 0.53 m², clear opening width of 20" (508) and clear opening height of 24" (610).
*To calculate alternative hinge type, see page 94.

Twin Casement Window Opening and Area Specifications

Window Number	Clear Opening Area Sq. Ft./(m²)	Clear Opening in Full Open Position Width Inches/(mm)	Clear Opening in Full Open Position Height Inches/(mm)	Glass Area Sq. Ft./(m²)	Vent Area Sq. Ft./(m²)	Top of Subfloor to Top of Inside Sill Stop Inches/(mm)	Overall Window Area Sq. Ft./(m²)	Default Hinge Type*
1620-2	0.67 (0.06)	5 3/8" (137)	17 13/16" (452)	2.70 (0.25)	2.92 (0.27)	61 9/16" (1564)	5.79 (0.54)	wash mode
1626-2	0.89 (0.08)	5 3/8" (137)	23 13/16" (605)	3.63 (0.34)	3.90 (0.36)	55 9/16" (1411)	7.27 (0.68)	wash mode
1630-2	1.12 (0.10)	5 3/8" (137)	29 13/16" (757)	4.57 (0.42)	4.89 (0.45)	49 9/16" (1259)	8.75 (0.81)	wash mode
1636-2	1.34 (0.12)	5 3/8" (137)	35 13/16" (909)	5.51 (0.51)	5.87 (0.55)	43 9/16" (1106)	10.23 (0.95)	wash mode
1640-2	1.57 (0.15)	5 3/8" (137)	41 13/16" (1062)	6.45 (0.60)	6.86 (0.64)	37 9/16" (954)	11.71 (1.09)	wash mode
1646-2	1.79 (0.17)	5 3/8" (137)	47 13/16" (1214)	7.38 (0.69)	7.84 (0.73)	31 9/16" (802)	13.19 (1.23)	wash mode
1650-2	2.02 (0.19)	5 3/8" (137)	53 13/16" (1367)	8.32 (0.77)	8.82 (0.82)	25 9/16" (649)	14.67 (1.36)	wash mode
1656-2	2.24 (0.21)	5 3/8" (137)	59 13/16" (1519)	9.26 (0.86)	9.81 (0.91)	19 9/16" (497)	16.15 (1.50)	wash mode
1660-2	2.47 (0.23)	5 3/8" (137)	65 13/16" (1671)	10.20 (0.95)	10.79 (1.00)	13 9/16" (344)	17.63 (1.64)	wash mode
1920-2	1.04 (0.10)	8 3/8" (213)	17 13/16" (452)	3.41 (0.32)	3.66 (0.34)	61 9/16" (1564)	6.77 (0.63)	wash mode
1926-2	1.39 (0.13)	8 3/8" (213)	23 13/16" (605)	4.60 (0.43)	4.90 (0.45)	55 9/16" (1411)	8.50 (0.79)	wash mode
1930-2	1.74 (0.16)	8 3/8" (213)	29 13/16" (757)	5.79 (0.54)	6.13 (0.57)	49 9/16" (1259)	10.23 (0.95)	wash mode
1936-2	2.09 (0.19)	8 3/8" (213)	35 13/16" (909)	6.98 (0.65)	7.36 (0.68)	43 9/16" (1106)	11.96 (1.11)	wash mode
1940-2	2.44 (0.23)	8 3/8" (213)	41 13/16" (1062)	8.16 (0.76)	8.60 (0.80)	37 9/16" (954)	13.69 (1.27)	wash mode
1946-2	2.79 (0.26)	8 3/8" (213)	47 13/16" (1214)	9.35 (0.87)	9.83 (0.91)	31 9/16" (802)	15.42 (1.43)	wash mode
1950-2	3.14 (0.29)	8 3/8" (213)	53 13/16" (1367)	10.54 (0.98)	11.06 (1.03)	25 9/16" (649)	17.15 (1.59)	wash mode
1956-2	3.49 (0.32)	8 3/8" (213)	59 13/16" (1519)	11.73 (1.09)	12.30 (1.14)	19 9/16" (497)	18.88 (1.75)	wash mode
1960-2	3.84 (0.36)	8 3/8" (213)	65 13/16" (1671)	12.91 (1.20)	13.53 (1.26)	13 9/16" (344)	20.61 (1.91)	wash mode
2020-2	1.41 (0.13)	11 3/8" (289)	17 13/16" (452)	4.13 (0.38)	4.40 (0.41)	61 9/16" (1564)	7.75 (0.72)	wash mode

• Top of Subfloor to Top of Inside Sill Stop is calculated based upon a structural header height of 6'-10 1/2" (2096).
• Dimensions in parentheses are in millimeters or square meters.
*To calculate alternative hinge type, see page 94.

continued on next page

Twin Casement Window Opening and Area Specifications *(continued)*

Window Number	Clear Opening Area Sq. Ft./(m²)	Clear Opening in Full Open Position Width Inches/(mm)	Clear Opening in Full Open Position Height Inches/(mm)	Glass Area Sq. Ft./(m²)	Vent Area Sq. Ft./(m²)	Top of Subfloor to Top of Inside Sill Stop Inches/(mm)	Overall Window Area Sq. Ft./(m²)	Default Hinge Type*
2026-2	1.88 (0.18)	11 3/8" (289)	23 13/16" (605)	5.57 (0.52)	5.89 (0.55)	55 9/16" (1411)	9.73 (0.90)	wash mode
2030-2	2.36 (0.22)	11 3/8" (289)	29 13/16" (757)	7.01 (0.65)	7.37 (0.68)	49 9/16" (1259)	11.71 (1.09)	wash mode
2036-2	2.83 (0.26)	11 3/8" (289)	35 13/16" (909)	8.45 (0.78)	8.86 (0.82)	43 9/16" (1106)	13.69 (1.27)	wash mode
2040-2	3.31 (0.31)	11 3/8" (289)	41 13/16" (1062)	9.88 (0.92)	10.34 (0.96)	37 9/16" (954)	15.67 (1.46)	wash mode
2046-2	3.78 (0.35)	11 3/8" (289)	47 13/16" (1214)	11.32 (1.05)	11.82 (1.10)	31 9/16" (802)	17.65 (1.64)	wash mode
2050-2	4.26 (0.40)	11 3/8" (289)	53 13/16" (1367)	12.76 (1.19)	13.31 (1.24)	25 9/16" (649)	19.63 (1.82)	wash mode
2056-2	4.73 (0.44)	11 3/8" (289)	59 13/16" (1519)	14.20 (1.32)	14.79 (1.37)	19 9/16" (497)	21.61 (2.01)	wash mode
2060-2	5.21 (0.48)	11 3/8" (289)	65 13/16" (1671)	15.63 (1.45)	16.27 (1.51)	13 9/16" (344)	23.59 (2.19)	wash mode
2320-2	1.78 (0.17)	14 3/8" (366)	17 13/16" (452)	4.85 (0.45)	5.15 (0.48)	61 9/16" (1564)	8.73 (0.81)	wash mode
2326-2	2.38 (0.22)	14 3/8" (366)	23 13/16" (605)	6.54 (0.61)	6.88 (0.64)	55 9/16" (1411)	10.96 (1.02)	wash mode
2330-2	2.98 (0.28)	14 3/8" (366)	29 13/16" (757)	8.23 (0.76)	8.61 (0.80)	49 9/16" (1259)	13.19 (1.23)	wash mode
2336-2	3.58 (0.33)	14 3/8" (366)	35 13/16" (909)	9.91 (0.92)	10.35 (0.96)	43 9/16" (1106)	15.42 (1.43)	wash mode
2340-2	4.18 (0.39)	14 3/8" (366)	41 13/16" (1062)	11.60 (1.08)	12.08 (1.12)	37 9/16" (954)	17.65 (1.64)	wash mode
2346-2	4.78 (0.44)	14 3/8" (366)	47 13/16" (1214)	13.29 (1.23)	13.81 (1.28)	31 9/16" (802)	19.88 (1.85)	wash mode
2350-2	5.38 (0.50)	14 3/8" (366)	53 13/16" (1367)	14.98 (1.39)	15.55 (1.44)	25 9/16" (649)	22.11 (2.05)	wash mode
2356-2	5.98 (0.56)	14 3/8" (366)	59 13/16" (1519)	16.66 (1.55)	17.28 (1.61)	19 9/16" (497)	24.34 (2.26)	wash mode
2360-2	6.58 (0.61)	14 3/8" (366)	65 13/16" (1671)	18.35 (1.70)	19.02 (1.77)	13 9/16" (344)	26.56 (2.47)	wash mode
2620-2	2.15 (0.20)	17 3/8" (442)	17 13/16" (452)	5.57 (0.52)	5.89 (0.55)	61 9/16" (1564)	9.71 (0.90)	wash mode
2626-2	2.88 (0.27)	17 3/8" (442)	23 13/16" (605)	7.51 (0.70)	7.87 (0.73)	55 9/16" (1411)	12.19 (1.13)	wash mode
2630-2	3.60 (0.33)	17 3/8" (442)	29 13/16" (757)	9.45 (0.88)	9.86 (0.92)	49 9/16" (1259)	14.67 (1.36)	wash mode
2636-2	4.33 (0.40)	17 3/8" (442)	35 13/16" (909)	11.38 (1.06)	11.84 (1.10)	43 9/16" (1106)	17.15 (1.59)	wash mode
2640-2 ◊	6.30 (0.59)	21 11/16" (551)	41 13/16" (1062)	13.32 (1.24)	13.82 (1.28)	37 9/16" (954)	19.63 (1.82)	widest clear opening
2646-2 ◊	7.21 (0.67)	21 11/16" (551)	47 13/16" (1214)	15.26 (1.42)	15.81 (1.47)	31 9/16" (802)	22.11 (2.05)	widest clear opening
2650-2 ◊	8.11 (0.75)	21 11/16" (551)	53 13/16" (1367)	17.20 (1.60)	17.79 (1.65)	25 9/16" (649)	24.59 (2.28)	widest clear opening
2656-2 ◊	9.02 (0.84)	21 11/16" (551)	59 13/16" (1519)	19.13 (1.78)	19.77 (1.84)	19 9/16" (497)	27.06 (2.51)	widest clear opening
2660-2 ◊	9.92 (0.92)	21 11/16" (551)	65 13/16" (1671)	21.07 (1.96)	21.76 (2.02)	13 9/16" (344)	29.54 (2.74)	widest clear opening
2920-2	2.52 (0.23)	20 3/8" (518)	17 13/16" (452)	6.29 (0.58)	6.63 (0.62)	61 9/16" (1564)	10.69 (0.99)	wash mode
2926-2	3.37 (0.31)	20 3/8" (518)	23 13/16" (605)	8.48 (0.79)	8.86 (0.82)	55 9/16" (1411)	13.42 (1.25)	wash mode
2930-2	4.22 (0.39)	20 3/8" (518)	29 13/16" (757)	10.66 (0.99)	11.10 (1.03)	49 9/16" (1259)	16.15 (1.50)	wash mode
2936-2 ◊	6.08 (0.57)	24 1/2" (621)	35 13/16" (909)	12.85 (1.19)	13.33 (1.24)	43 9/16" (1106)	18.88 (1.75)	widest clear opening
2940-2 ◊	5.92 (0.55)	20 3/8" (518)	41 13/16" (1062)	15.04 (1.40)	15.56 (1.45)	37 9/16" (954)	21.61 (2.01)	wash mode
2946-2 ◊	6.77 (0.63)	20 3/8" (518)	47 13/16" (1214)	17.23 (1.60)	17.80 (1.65)	31 9/16" (802)	24.34 (2.26)	wash mode
2950-2 ◊	7.62 (0.71)	20 3/8" (518)	53 13/16" (1367)	19.41 (1.80)	20.03 (1.86)	25 9/16" (649)	27.06 (2.51)	wash mode
2956-2 ◊	8.47 (0.79)	20 3/8" (518)	59 13/16" (1519)	21.60 (2.01)	22.27 (2.07)	19 9/16" (497)	29.79 (2.77)	wash mode
2960-2 ◊	9.32 (0.87)	20 3/8" (518)	65 13/16" (1671)	23.79 (2.21)	24.50 (2.28)	13 9/16" (344)	32.52 (3.02)	wash mode
3020-2	2.89 (0.27)	23 3/8" (594)	17 13/16" (452)	7.01 (0.65)	7.37 (0.68)	61 9/16" (1564)	11.67 (1.08)	wash mode
3026-2	3.87 (0.36)	23 3/8" (594)	23 13/16" (605)	9.45 (0.88)	9.86 (0.92)	55 9/16" (1411)	14.65 (1.36)	wash mode
3030-2	4.84 (0.45)	23 3/8" (594)	29 13/16" (757)	11.88 (1.10)	12.34 (1.15)	49 9/16" (1259)	17.63 (1.64)	wash mode
3036-2 ◊	5.82 (0.54)	23 3/8" (594)	35 13/16" (909)	14.32 (1.33)	14.82 (1.38)	43 9/16" (1106)	20.61 (1.91)	wash mode
3040-2 ◊	6.79 (0.63)	23 3/8" (594)	41 13/16" (1062)	16.76 (1.56)	17.31 (1.61)	37 9/16" (954)	23.59 (2.19)	wash mode
3046-2 ◊	7.77 (0.72)	23 3/8" (594)	47 13/16" (1214)	19.20 (1.78)	19.79 (1.84)	31 9/16" (802)	26.56 (2.47)	wash mode
3050-2 ◊	8.74 (0.81)	23 3/8" (594)	53 13/16" (1367)	21.63 (2.01)	22.27 (2.07)	25 9/16" (649)	29.54 (2.74)	wash mode
3056-2 ◊	9.72 (0.90)	23 3/8" (594)	59 13/16" (1519)	24.07 (2.24)	24.76 (2.30)	19 9/16" (497)	32.52 (3.02)	wash mode
3060-2 ◊	10.69 (0.99)	23 3/8" (594)	65 13/16" (1671)	26.51 (2.46)	27.24 (2.53)	13 9/16" (344)	35.50 (3.30)	wash mode

• Top of Subfloor to Top of Inside Sill Stop is calculated based upon a structural header height of 6'-10 1/2" (2096).
• Dimensions in parentheses are in millimeters or square meters.
◊ Meets or exceeds clear opening area of 5.7 sq. ft. or 0.53 m², clear opening width of 20" (508) and clear opening height of 24" (610).
*To calculate alternative hinge type, see page 94.

Grille Patterns

	Prairie A	Colonial	Modified Colonial	Simulated Meeting Rail	Tall Fractional	Short Fractional	Victorian
Casement	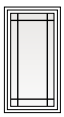	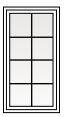			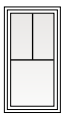	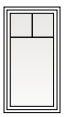	

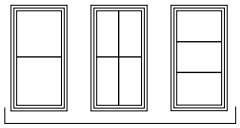

Specified Equal Light Examples

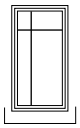

Custom Example

Number of lights and overall pattern varies with window size. Patterns may not be available in all configurations or sizes. Specified equal light and custom patterns are also available. For specified equal light, specify number of same-size rectangles across or down. For more grille options, see page 14 or visit **andersenwindows.com/grilles**.

Casement Window Details – New Construction

Scale 1 1/2" (38) = 1'-0" (305) – 1:8

1 3/8" Flange Setback

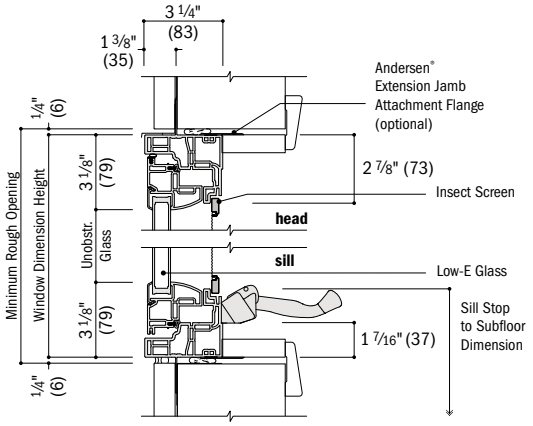

Vertical Section

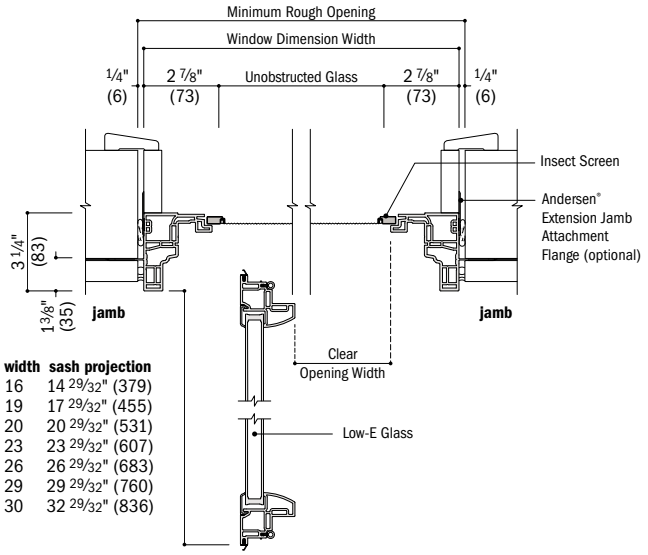

width	sash projection
16	14 29/32" (379)
19	17 29/32" (455)
20	20 29/32" (531)
23	23 29/32" (607)
26	26 29/32" (683)
29	29 29/32" (760)
30	32 29/32" (836)

Horizontal Section

1" Flange Setback With Stucco Key

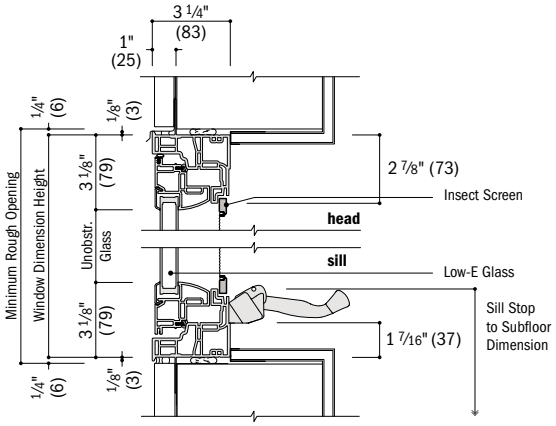

Vertical Section
Stucco Exterior

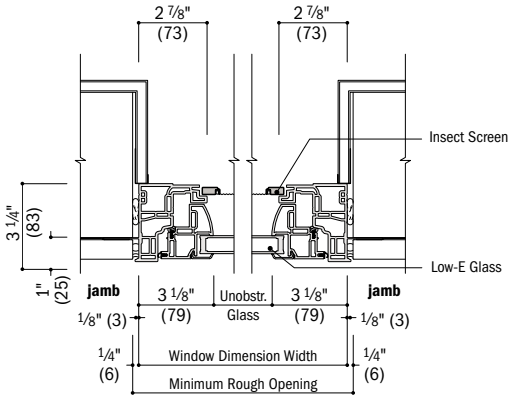

Horizontal Section
Stucco Exterior

Integrals

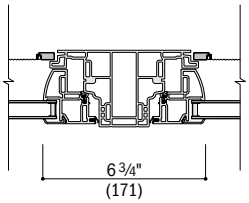

Horizontal Section
Twin Casement

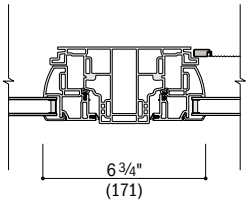

Horizontal Section
Picture With Flanking Casement

See pages 88-93 for joining details.

- Light-colored areas are parts included with window. Dark-colored areas are additional Andersen® parts required to complete window assembly as shown.
- **Minimum rough openings may need to be increased to allow for use of building wraps, flashing, sill panning, brackets, fasteners or other items. See installation information on page 121.**
- Drip cap is required to complete window installation as shown but may not be included with window. Use of drip cap is recommended for proper installation.
- Details are for illustration only and are not intended to represent product installation methods or materials. Refer to product installation instructions at andersenwindows.com.
- Dimensions in parentheses are in millimeters.

Casement Window Details – Replacement

Scale 1 1/2" (38) = 1'-0" (305) — 1:8

No Flange

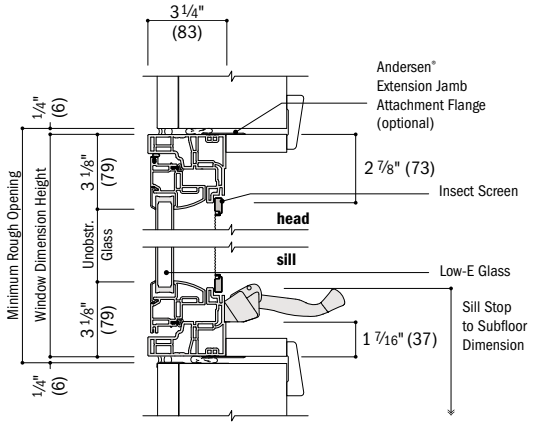

Vertical Section
Existing Framed Opening

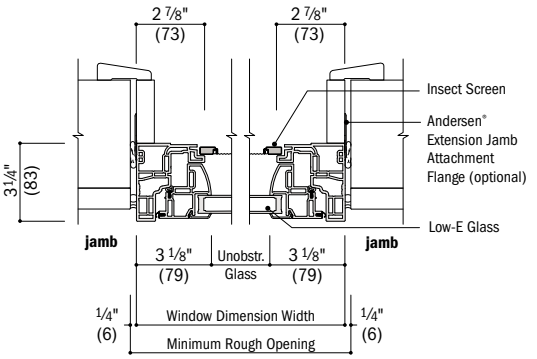

Horizontal Section
Existing Framed Opening

Insert

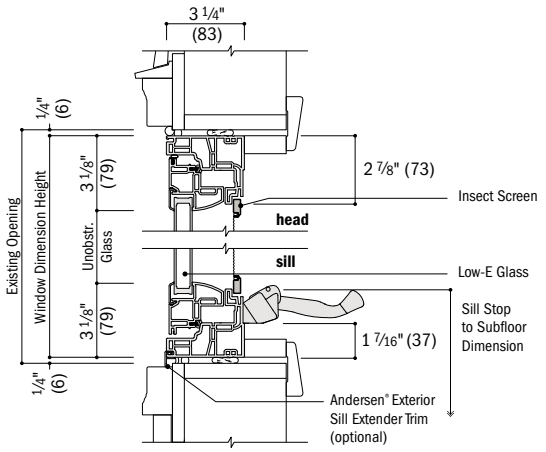

Vertical Section
Existing Window Opening

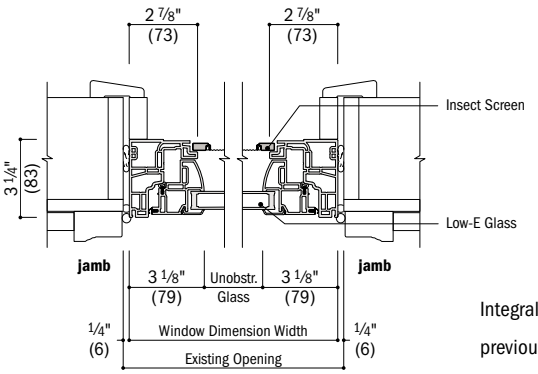

Horizontal Section
Existing Window Opening

Integral details shown on previous page. Installation accessories are available for windows with insert and flush fin frames; see page 120.

See pages 88-93 for joining details.

Flush Fin*

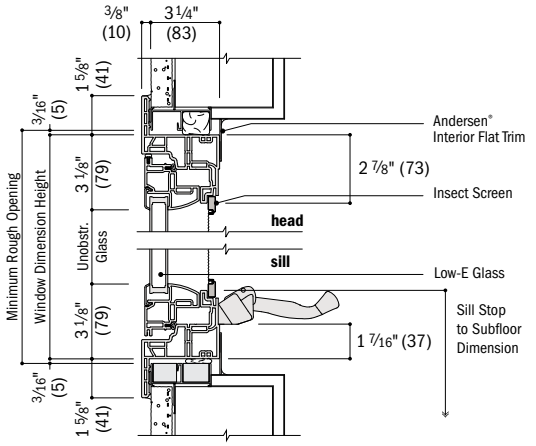

Vertical Section
Existing Aluminum Frame Window Opening

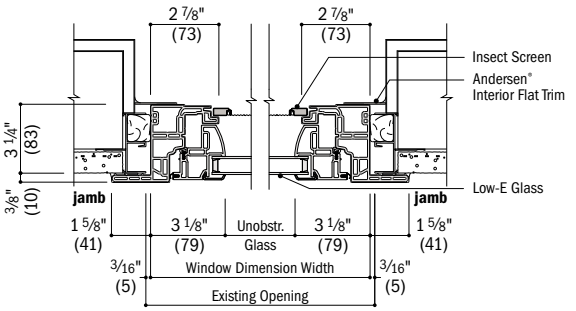

Horizontal Section
Existing Aluminum Frame Window Opening

- Light-colored areas are parts included with window. Dark-colored areas are additional Andersen® parts required to complete window assembly as shown.
- **Minimum rough openings may need to be increased to allow for use of building wraps, flashing, sill panning, brackets, fasteners or other items. See installation information on page 121.**
- Details are for illustration only and are not intended to represent product installation methods or materials. Refer to product installation instructions at andersenwindows.com.
- Dimensions in parentheses are in millimeters.

*Windows with flush fin frame are available in select Southwestern states including Arizona, California, Nevada, New Mexico and Utah. Limited configuration availability. See your Andersen supplier for more information.

Table of Awning Window Sizes

Scale 1/8" (3) = 1'-0" (305) – 1:96

Window Dimension	1'-5 1/2" (445)	1'-11 1/2" (597)	2'-5 1/2" (749)	2'-11 1/2" (902)	3'-5 1/2" (1054)	3'-11 1/2" (1207)
Minimum Rough Opening	1'-6" (457)	2'-0" (610)	2'-6" (762)	3'-0" (914)	3'-6" (1067)	4'-0" (1219)
Unobstructed Glass	11 1/4" (286)	17 1/4" (438)	23 1/4" (591)	29 1/4" (743)	35 1/4" (895)	41 1/4" (1048)

CUSTOM WIDTHS – 17 1/2" to 47 1/2"

CUSTOM HEIGHTS – 17 1/2" to 35 1/2"

	1'-5 1/2" (445)	1'-11 1/2" (597)	2'-5 1/2" (749)	2'-11 1/2" (902)
1'-5 1/2" (445)	1616	2016	2616	3016	3616	4016
1'-11 1/2" (597)	1620	2020	2620	3020	3620	4020
2'-5 1/2" (749)	1626	2026	2626	3026	3626	4026
2'-11 1/2" (902)	1630	2030	2630	3030	3630	4030

Custom-size windows are available in 1/8" (3) increments.

See page 95 for custom sizes and specifications.

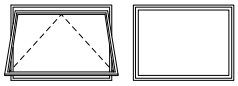

Venting Stationary

Choose venting or stationary. **Awning windows must be installed to vent as shown and should not be rotated and used as a hopper.**

Grille patterns shown on page 28. Details shown on pages 30-31.

Table of Twin Awning Window Sizes

Scale 1/8" (3) = 1'-0" (305) – 1:96

Window Dimension	2'-11 1/2" (902)	3'-5 1/2" (1054)	3'-11 1/2" (1207)	4'-5 1/2" (1359)	4'-11 1/2" (1511)	5'-5 1/2" (1664)	5'-11 1/2" (1816)
Minimum Rough Opening	3'-0" (914)	3'-6" (1067)	4'-0" (1219)	4'-6" (1372)	5'-0" (1524)	5'-6" (1676)	6'-0" (1829)
Unobstructed Glass (width of single sash)	11 1/4" (286)	14 1/4" (362)	17 1/4" (438)	20 1/4" (514)	23 1/4" (591)	26 1/4" (667)	29 1/4" (743)

	11 1/2" (292)	1'-5 1/2" (445)	1'-11 1/2" (597)
11 1/2" (292)	1610-2	1910-2	2010-2	2310-2	2610-2	2910-2	3010-2
1'-5 1/2" (445)	1616-2	1916-2	2016-2	2316-2	2616-2	2916-2	3016-2
1'-11 1/2" (597)	1620-2	1920-2	2020-2	2320-2	2620-2	2920-2	3020-2

CUSTOM WIDTHS – 35 1/2" to 71 1/2"

CUSTOM HEIGHTS – 17 1/2" to 35 1/2"

	1'-5 1/2" (445)	1'-11 1/2" (597)	2'-5 1/2" (749)	2'-11 1/2" (902)
1'-5 1/2" (445)	1616-2	1916-2	2016-2	2316-2	2616-2	2916-2	3016-2
1'-11 1/2" (597)	1620-2	1920-2	2020-2	2320-2	2620-2	2920-2	3020-2
2'-5 1/2" (749)	1626-2	1926-2	2026-2	2326-2	2626-2	2926-2	3026-2
2'-11 1/2" (902)	1630-2	1930-2	2030-2	2330-2	2630-2	2930-2	3030-2

Custom-size windows are available in 1/8" (3) increments. See page 95 for custom sizes and specifications.

Windows have one continuous outer frame.

Matching transom windows are also shown. See Picture, Transom & Specialty Windows section starting on page 68 for more information.

Grille patterns shown on page 28. Details shown on pages 30-31.

- Window Dimension always refers to outside frame-to-frame dimension.
- **Minimum Rough Opening dimensions may need to be increased to allow for use of building wraps, flashing, sill panning, brackets, fasteners or other items. See page 121 for more details.**
- Dimensions in parentheses are in millimeters.

Table of Picture Window Over Awning Sizes

Scale 1/8" (3) = 1'-0" (305) – 1:96

Window Dimension	1'-11 1/2" (597)	2'-5 1/2" (749)	2'-11 1/2" (902)	3'-5 1/2" (1054)	3'-11 1/2" (1207)
Minimum Rough Opening	2'-0" (610)	2'-6" (762)	3'-0" (914)	3'-6" (1067)	4'-0" (1219)
Unobstructed Glass (height of upper sash)	17 1/4" (438)	23 1/4" (591)	29 1/4" (743)	35 1/4" (895)	41 1/4" (1048)

CUSTOM WIDTHS – 17 1/2" to 47 1/2"

CUSTOM HEIGHTS – 47 1/2" to 95 1/2"

3'-11 1/2" (1207)	4'-0" (1219)	17 1/4" (610)	2020 2020	2620 2620	3020 3020	3620 3620	4020 4020
4'-11 1/2" (1511)	5'-0" (1524)	23 1/4" (591)	2026 2026	2626 2626	3026 3026	3626 3626	4026 4026
5'-11 1/2" (1816)	6'-0" (1829)	29 1/4" (743)	2030 2030	2630 2630	3030 3030	3630 3630	4030 4030
5'-11 1/2" (1816)	6'-0" (1829)	35 1/4" (895)	2040 2020	2640 2620	3040 3020	3640 3620	4040 4020
6'-11 1/2" (2121)	7'-0" (2134)	35 1/4" (895)	2040 2030	2640 2630	3040 3030	3640 3630	4040 4030
6'-11 1/2" (2121)	7'-0" (2134)	53 1/4" (1353)	2050 2020	2650 2620	3050 3020	3650 3620	4050 4020
7'-11 1/2" (2426)	8'-0" (2438)	53 1/4" (1353)	2050 2030	2650 2630	3050 3030	3650 3630	4050 4030

Custom-size windows are available in 1/8" (3) increments.

See page 95 for custom sizes and specifications.

Windows have one continuous outer frame. For unobstructed glass height dimensions of lower sash, see page 27.

Grille patterns shown below. Details shown on pages 30-31.

Grille Patterns

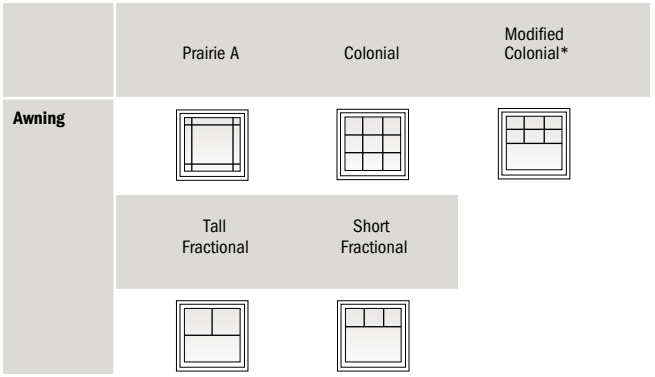

*Modified colonial pattern is only available for the upper sash of a picture window over awning configuration.

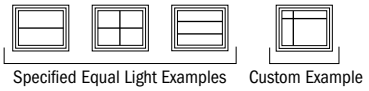

Number of lights and overall pattern varies with window size. Patterns may not be available in all configurations or sizes. Specified equal light and custom patterns are also available. For specified equal light, specify number of same-size rectangles across or down. For more grille options, see page 14 or visit **andersenwindows.com/grilles**.

• Window Dimension always refers to outside frame-to-frame dimension.
• **Minimum Rough Opening dimensions may need to be increased to allow for use of building wraps, flashing, sill panning, brackets, fasteners or other items. See page 121 for more details.**
• Dimensions in parentheses are in millimeters.

Awning Window Opening and Area Specifications

Window Number	Clear Opening Area Sq. Ft./(m²)		Clear Opening in Full Open Position Width Inches/(mm)		Clear Opening in Full Open Position Depth Inches/(mm)		Glass Area Sq. Ft./(m²)		Vent Area Sq. Ft./(m²)		Top of Subfloor to Top of Inside Sill Stop Inches/(mm)		Overall Window Area Sq. Ft./(m²)	
1616	0.66	(0.06)	11 13/16"	(300)	8"	(203)	0.88	(0.08)	0.66	(0.06)	67 9/16"	(1716)	2.13	(0.20)
1620	0.66	(0.06)	11 13/16"	(300)	8"	(203)	1.35	(0.13)	0.66	(0.06)	61 9/16"	(1564)	2.86	(0.27)
1626	0.66	(0.06)	11 13/16"	(300)	8"	(203)	1.82	(0.17)	0.66	(0.06)	55 9/16"	(1411)	3.59	(0.33)
1630	0.66	(0.06)	11 13/16"	(300)	8"	(203)	2.29	(0.21)	0.66	(0.06)	49 9/16"	(1259)	4.31	(0.40)
2016	0.99	(0.09)	17 13/16"	(452)	8"	(203)	1.35	(0.13)	0.99	(0.09)	67 9/16"	(1716)	2.86	(0.27)
2020	0.99	(0.09)	17 13/16"	(452)	8"	(203)	2.07	(0.19)	0.99	(0.09)	61 9/16"	(1564)	3.84	(0.36)
2026	0.99	(0.09)	17 13/16"	(452)	8"	(203)	2.79	(0.26)	0.99	(0.09)	55 9/16"	(1411)	4.81	(0.45)
2030	0.99	(0.09)	17 13/16"	(452)	8"	(203)	3.50	(0.33)	0.99	(0.09)	49 9/16"	(1259)	5.79	(0.54)
2616	1.32	(0.12)	23 13/16"	(605)	8"	(203)	1.82	(0.17)	1.32	(0.12)	67 9/16"	(1716)	3.59	(0.33)
2620	1.32	(0.12)	23 13/16"	(605)	8"	(203)	2.79	(0.26)	1.32	(0.12)	61 9/16"	(1564)	4.81	(0.45)
2626	1.32	(0.12)	23 13/16"	(605)	8"	(203)	3.75	(0.35)	1.32	(0.12)	55 9/16"	(1411)	6.04	(0.56)
2630	1.32	(0.12)	23 13/16"	(605)	8"	(203)	4.72	(0.44)	1.32	(0.12)	49 9/16"	(1259)	7.27	(0.68)
3016	1.66	(0.15)	29 13/16"	(757)	8"	(203)	2.29	(0.21)	1.66	(0.15)	67 9/16"	(1716)	4.31	(0.40)
3020	1.66	(0.15)	29 13/16"	(757)	8"	(203)	3.50	(0.33)	1.66	(0.15)	61 9/16"	(1564)	5.79	(0.54)
3026	1.66	(0.15)	29 13/16"	(757)	8"	(203)	4.72	(0.44)	1.66	(0.15)	55 9/16"	(1411)	7.27	(0.68)
3030	1.66	(0.15)	29 13/16"	(757)	8"	(203)	5.94	(0.55)	1.66	(0.15)	49 9/16"	(1259)	8.75	(0.81)
3616	1.99	(0.18)	35 13/16"	(909)	8"	(203)	2.75	(0.26)	1.99	(0.18)	67 9/16"	(1716)	5.04	(0.47)
3620	1.99	(0.18)	35 13/16"	(909)	8"	(203)	4.22	(0.39)	1.99	(0.18)	61 9/16"	(1564)	6.77	(0.63)
3626	1.99	(0.18)	35 13/16"	(909)	8"	(203)	5.69	(0.53)	1.99	(0.18)	55 9/16"	(1411)	8.50	(0.79)
3630	1.99	(0.18)	35 13/16"	(909)	8"	(203)	7.16	(0.67)	1.99	(0.18)	49 9/16"	(1259)	10.23	(0.95)
4016	2.32	(0.22)	41 13/16"	(1062)	8"	(203)	3.22	(0.30)	2.32	(0.22)	67 9/16"	(1716)	5.77	(0.54)
4020	2.32	(0.22)	41 13/16"	(1062)	8"	(203)	4.94	(0.46)	2.32	(0.22)	61 9/16"	(1564)	7.75	(0.72)
4026	2.32	(0.22)	41 13/16"	(1062)	8"	(203)	6.66	(0.62)	2.32	(0.22)	55 9/16"	(1411)	9.73	(0.90)
4030	2.32	(0.22)	41 13/16"	(1062)	8"	(203)	8.38	(0.78)	2.32	(0.22)	49 9/16"	(1259)	11.71	(1.09)

• Top of Subfloor to Top of Inside Sill Stop is calculated based upon a structural header height of 6'-10 1/2" (2096).
• Dimensions in parentheses are in millimeters or square meters.

Twin Awning Window Opening and Area Specifications

Window Number	Clear Opening Area Sq. Ft./(m²)		Clear Opening in Full Open Position Width Inches/(mm)		Clear Opening in Full Open Position Depth Inches/(mm)		Glass Area Sq. Ft./(m²)		Vent Area Sq. Ft./(m²)		Top of Subfloor to Top of Inside Sill Stop Inches/(mm)		Overall Window Area Sq. Ft./(m²)	
1616-2	0.66	(0.06)	11 13/16"	(300)	8"	(203)	1.76	(0.16)	1.31	(0.12)	67 9/16"	(1716)	4.31	(0.40)
1620-2	0.66	(0.06)	11 13/16"	(300)	8"	(203)	2.70	(0.25)	1.31	(0.12)	61 9/16"	(1564)	5.79	(0.54)
1626-2	0.66	(0.06)	11 13/16"	(300)	8"	(203)	3.63	(0.34)	1.31	(0.12)	55 9/16"	(1411)	7.27	(0.68)
1630-2	0.66	(0.06)	11 13/16"	(300)	8"	(203)	4.57	(0.42)	1.31	(0.12)	49 9/16"	(1259)	8.75	(0.81)
1916-2	0.82	(0.08)	14 13/16"	(376)	8"	(203)	2.23	(0.21)	1.65	(0.15)	67 9/16"	(1716)	5.04	(0.47)
1920-2	0.82	(0.08)	14 13/16"	(376)	8"	(203)	3.41	(0.32)	1.65	(0.15)	61 9/16"	(1564)	6.77	(0.63)
1926-2	0.82	(0.08)	14 13/16"	(376)	8"	(203)	4.60	(0.43)	1.65	(0.15)	55 9/16"	(1411)	8.50	(0.79)
1930-2	0.82	(0.08)	14 13/16"	(376)	8"	(203)	5.79	(0.54)	1.65	(0.15)	49 9/16"	(1259)	10.23	(0.95)
2016-2	0.99	(0.09)	17 13/16"	(452)	8"	(203)	2.70	(0.25)	1.98	(0.18)	67 9/16"	(1716)	5.77	(0.54)
2020-2	0.99	(0.09)	17 13/16"	(452)	8"	(203)	4.13	(0.38)	1.98	(0.18)	61 9/16"	(1564)	7.75	(0.72)
2026-2	0.99	(0.09)	17 13/16"	(452)	8"	(203)	5.57	(0.52)	1.98	(0.18)	55 9/16"	(1411)	9.73	(0.90)
2030-2	0.99	(0.09)	17 13/16"	(452)	8"	(203)	7.01	(0.65)	1.98	(0.18)	49 9/16"	(1259)	11.71	(1.09)
2316-2	1.16	(0.11)	20 13/16"	(528)	8"	(203)	3.16	(0.29)	2.31	(0.21)	67 9/16"	(1716)	6.50	(0.60)
2320-2	1.16	(0.11)	20 13/16"	(528)	8"	(203)	4.85	(0.45)	2.31	(0.21)	61 9/16"	(1564)	8.73	(0.81)
2326-2	1.16	(0.11)	20 13/16"	(528)	8"	(203)	6.54	(0.61)	2.31	(0.21)	55 9/16"	(1411)	10.96	(1.02)
2330-2	1.16	(0.11)	20 13/16"	(528)	8"	(203)	8.23	(0.76)	2.31	(0.21)	49 9/16"	(1259)	13.19	(1.23)
2616-2	1.32	(0.12)	23 13/16"	(605)	8"	(203)	3.63	(0.34)	2.65	(0.25)	67 9/16"	(1716)	7.23	(0.67)
2620-2	1.32	(0.12)	23 13/16"	(605)	8"	(203)	5.57	(0.52)	2.65	(0.25)	61 9/16"	(1564)	9.71	(0.90)
2626-2	1.32	(0.12)	23 13/16"	(605)	8"	(203)	7.51	(0.70)	2.65	(0.25)	55 9/16"	(1411)	12.19	(1.13)
2630-2	1.32	(0.12)	23 13/16"	(605)	8"	(203)	9.45	(0.88)	2.65	(0.25)	49 9/16"	(1259)	14.67	(1.36)
2916-2	1.49	(0.14)	26 13/16"	(681)	8"	(203)	4.10	(0.38)	2.98	(0.28)	67 9/16"	(1716)	7.96	(0.74)
2920-2	1.49	(0.14)	26 13/16"	(681)	8"	(203)	6.29	(0.58)	2.98	(0.28)	61 9/16"	(1564)	10.69	(0.99)
2926-2	1.49	(0.14)	26 13/16"	(681)	8"	(203)	8.48	(0.79)	2.98	(0.28)	55 9/16"	(1411)	13.42	(1.25)
2930-2	1.49	(0.14)	26 13/16"	(681)	8"	(203)	10.66	(0.99)	2.98	(0.28)	49 9/16"	(1259)	16.15	(1.50)
3016-2	1.66	(0.15)	29 13/16"	(757)	8"	(203)	4.57	(0.42)	3.31	(0.31)	67 9/16"	(1716)	8.69	(0.81)
3020-2	1.66	(0.15)	29 13/16"	(757)	8"	(203)	7.01	(0.65)	3.31	(0.31)	61 9/16"	(1564)	11.67	(1.08)
3026-2	1.66	(0.15)	29 13/16"	(757)	8"	(203)	9.45	(0.88)	3.31	(0.31)	55 9/16"	(1411)	14.65	(1.36)
3030-2	1.66	(0.15)	29 13/16"	(757)	8"	(203)	11.88	(1.10)	3.31	(0.31)	49 9/16"	(1259)	17.63	(1.64)

• Top of Subfloor to Top of Inside Sill Stop is calculated based upon a structural header height of 6'-10 1/2" (2096).
• Dimensions in parentheses are in millimeters or square meters.

Awning Window Details – New Construction

Scale 1 1/2" (38) = 1'-0" (305) – 1:8

1 3/8" Flange Setback

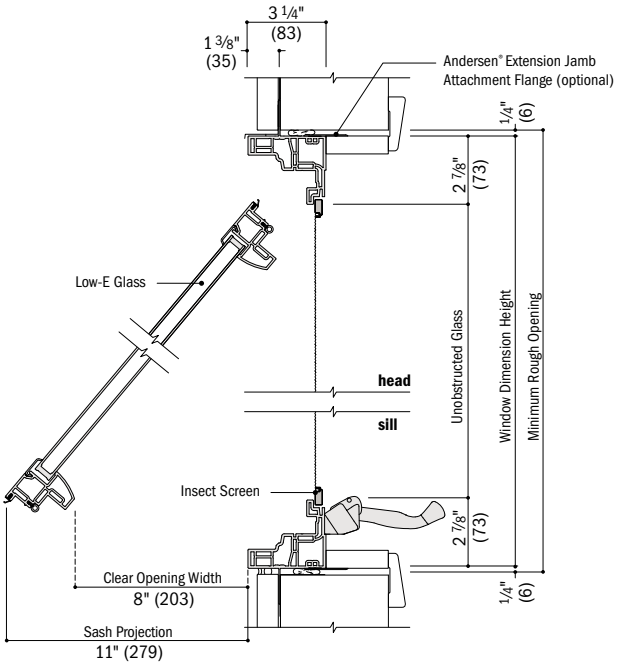

Vertical Section

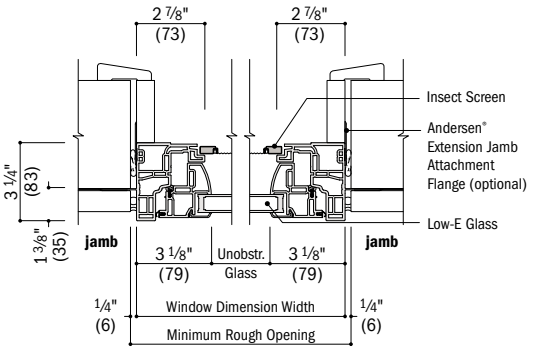

Horizontal Section

1" Flange Setback With Stucco Key

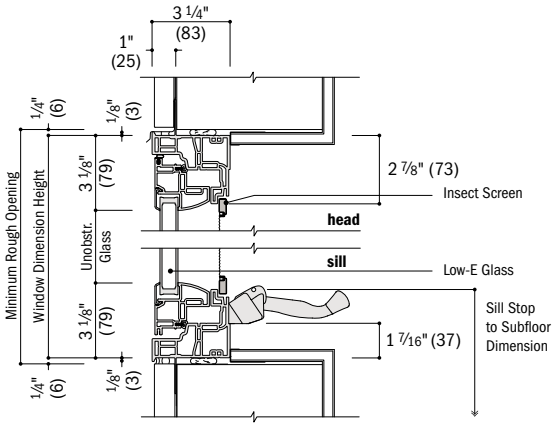

Vertical Section
Stucco Exterior

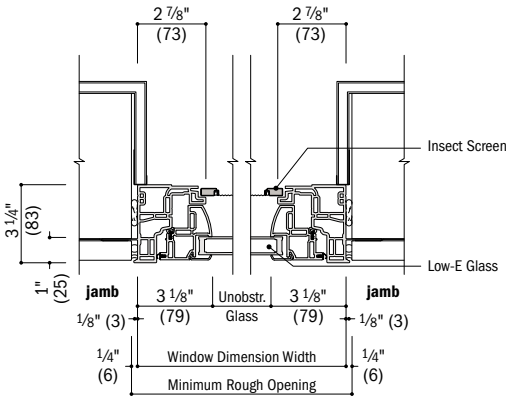

Horizontal Section
Stucco Exterior

Integrals

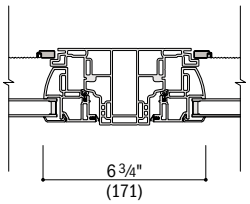

Horizontal Section
Twin Awning

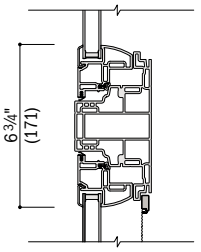

Vertical Section
Picture Over Awning

See pages 88-93 for joining details.

- Light-colored areas are parts included with window. Dark-colored areas are additional Andersen® parts required to complete window assembly as shown.
- **Minimum rough openings may need to be increased to allow for use of building wraps, flashing, sill panning, brackets, fasteners or other items. See installation information on page 121.**
- Drip cap is required to complete window installation as shown but may not be included with window. Use of drip cap is recommended for proper installation.
- Details are for illustration only and are not intended to represent product installation methods or materials. Refer to product installation instructions at andersenwindows.com.
- Dimensions in parentheses are in millimeters.

Awning Window Details – Replacement

Scale 1 1/2" (38) = 1'-0" (305) – 1:8

No Flange

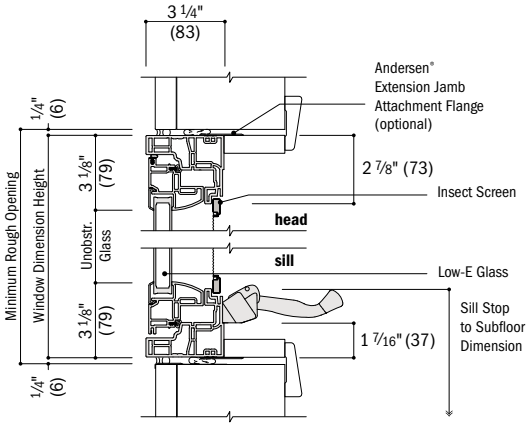

Vertical Section
Existing Framed Opening

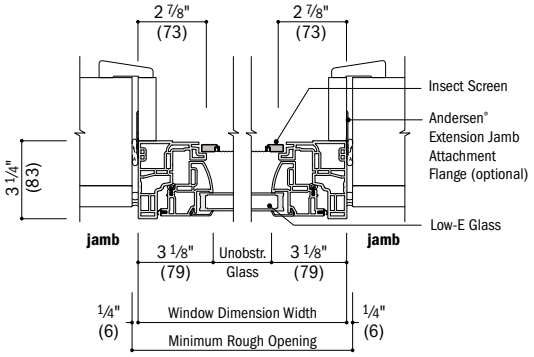

Horizontal Section
Existing Framed Opening

Insert

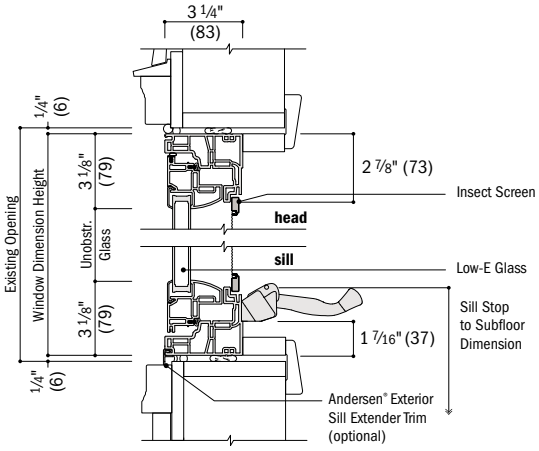

Vertical Section
Existing Window Opening

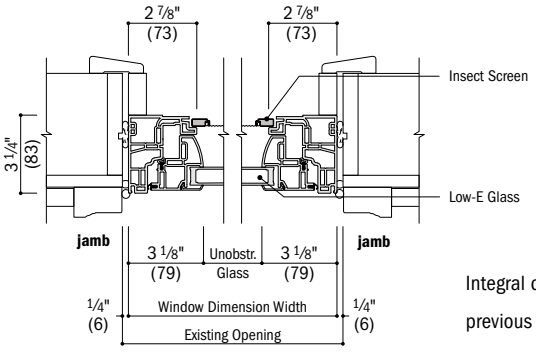

Horizontal Section
Existing Window Opening

Integral details shown on previous page. Installation accessories are available for windows with insert and flush fin frames; see page 120.

See pages 88-93 for joining details.

Flush Fin*

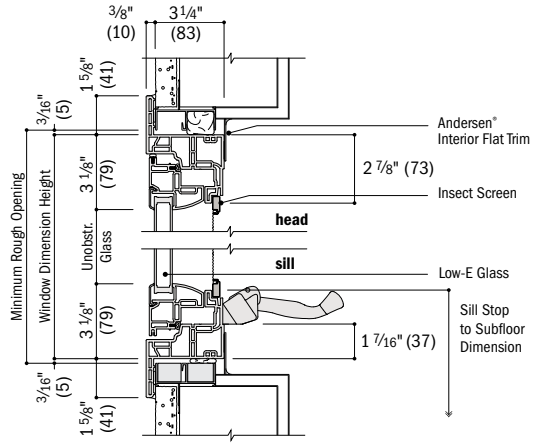

Vertical Section
Existing Aluminum Frame Window Opening

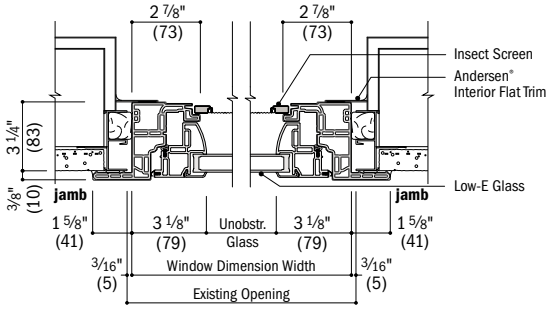

Horizontal Section
Existing Aluminum Frame Window Opening

- Light-colored areas are parts included with window. Dark-colored areas are additional Andersen® parts required to complete window assembly as shown.
- **Minimum rough openings may need to be increased to allow for use of building wraps, flashing, sill panning, brackets, fasteners or other items. See installation information on page 121.**
- Details are for illustration only and are not intended to represent product installation methods or materials. Refer to product installation instructions at andersenwindows.com.
- Dimensions in parentheses are in millimeters.

*Windows with flush fin frame are available in select Southwestern states including Arizona, California, Nevada, New Mexico and Utah. Limited configuration availability. See your Andersen supplier for more information.

Table of Arch Single-Hung Window Sizes

Scale 1/8" (3) = 1'-0" (305) – 1:96

Window Width Dimension	1'-11 1/2" (597)	2'-5 1/2" (749)	2'-11 1/2" (902)	3'-5 1/2" (1054)
Minimum Rough Opening	2'-0" (610)	2'-6" (762)	3'-0" (914)	3'-6" (1067)
Unobstructed Glass (width of upper sash)	20" (508)	26" (660)	32" (813)	38" (965)
Unobstructed Glass (width of lower sash)	17 1/4" (438)	23 1/4" (591)	29 1/4" (743)	35 1/4" (895)
Radius	23 1/2" (597)	29 1/2" (749)	35 1/2" (902)	41 1/2" (1054)
Chord Height	3 1/8" (79)	4" (102)	4 3/4" (121)	5 1/2" (140)

Unobstructed Glass (height of lower sash shown below) — Unobstructed Glass (height of upper sash shown to right of window)

Minimum Rough Opening = Window Height + 1/2" (13)

Unobstructed Glass (height of lower sash shown below)	Side Height	Window Height (shown left of window)	1'-11 1/2" (597)	2'-5 1/2" (749)	2'-11 1/2" (902)	3'-5 1/2" (1054)
10 9/16" (268)	2'-5 1/2" (749)	2'-8 5/8" (829)	15 1/16" (383)	15 7/8" (403)	16 11/16" (424)	17 1/2" (445)
			2026	2626	3026	3626
13 9/16" (345)	2'-11 1/2" (902)	3'-2 5/8" (981)	18 1/16" (459)	18 7/8" (479)	19 11/16" (500)	20 1/2" (521)
			2030	2630	3030	3630
16 9/16" (421)	3'-5 1/2" (1054)	3'-8 5/8" (1133)	21 1/16" (535)	21 7/8" (556)	22 11/16" (576)	23 1/2" (597)
			2036	2636	3036	3636
19 9/16" (497)	3'-11 1/2" (1207)	4'-2 5/8" (1286)	24 1/16" (611)	24 7/8" (632)	25 11/16" (652)	26 1/2" (673)
			2040	2640	3040	3640
22 9/16" (573)	4'-5 1/2" (1359)	4'-8 5/8" (1438)	27 1/16" (687)	27 7/8" (708)	28 11/16" (729)	29 1/2" (749)
			2046	2646	3046	3646
25 9/16" (649)	4'-11 1/2" (1511)	5'-2 5/8" (1591)	30 1/16" (764)	30 7/8" (784)	31 11/16" (805)	32 1/2" 826)
			2050	2650	3050◊	3650◊
28 9/16" (726)	5'-5 1/2" (1664)	5'-8 5/8" (1743)	33 1/16" (840)	33 7/8" (860)	34 11/16" (881)	35 1/2" (902)
			2056	2656	3056◊	3656◊
31 9/16" (802)	5'-11 1/2" (1816)	6'-2 5/8" (1895)	36 1/16" (916)	36 7/8" (937)	37 11/16" (957)	38 1/2" (978)
			2060	2660◊	3060◊	3660◊
34 9/16" (878)	6'-5 1/2" (1969)	6'-8 5/8" (2048)	39 1/16" (992)	39 7/8" (1013)	40 11/16" (1033)	41 1/2" (1054)
			2066	2666◊	3066◊	3666◊

continued on next page

Custom-size windows are available in 1/8" (3) increments. Contact your Andersen supplier for more information.

For arch single-hung windows, the size designation does not reflect the overall window height (e.g., a 2026 window size has a side height of 2'-5 1/2" and an overall window height of 2'-8 5/8").

Height dimensions for upper sash are shown to the right of each window size and for lower sash are to the far left.

Grille patterns shown on page 49. Details shown on pages 50-51.

- Window Dimension always refers to outside frame-to-frame dimension.
- **Minimum Rough Opening dimensions may need to be increased to allow for use of building wraps, flashing, sill panning, brackets, fasteners or other items. See page 121 for more details.**
- Dimensions in parentheses are in millimeters.
- Arch single-hung windows are not available with the flush fin frame option.

◊ Meets or exceeds clear opening area of 5.7 sq. ft. or 0.53 m², clear opening width of 20" (508) and clear opening height of 24" (610). See table on pages 33 and 41.

Table of Arch Single-Hung Window Sizes *(continued)*

Scale 1/8" (3) = 1'-0" (305) – 1:96

Window Width Dimension	1'-11 1/2" (597)	2'-5 1/2" (749)	2'-11 1/2" (902)	3'-5 1/2" (1054)
Minimum Rough Opening	2'-0" (610)	2'-6" (762)	3'-0" (914)	3'-6" (1067)
Unobstructed Glass (width of upper sash)	20" (508)	26" (660)	32" (813)	38" (965)
Unobstructed Glass (width of lower sash)	17 1/4" (438)	23 1/4" (591)	29 1/4" (743)	35 1/4" (895)
Radius	23 1/2" (597)	29 1/2" (749)	35 1/2" (902)	41 1/2" (1054)

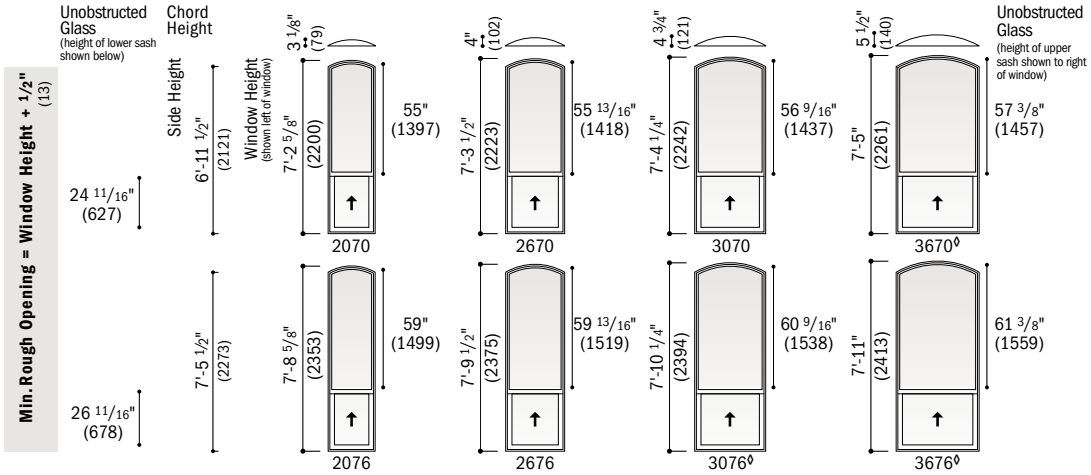

Notes on previous page also apply to this page.

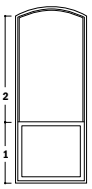

Windows with a side height greater than 6'-5 1/2" (1969) are only available with a 2:1 reverse cottage sash ratio.*

- Window Dimension always refers to outside frame-to-frame dimension.
- **Minimum Rough Opening dimensions may need to be increased to allow for use of building wraps, flashing, sill panning, brackets, fasteners or other items. See page 121 for more details.**
- Dimensions in parentheses are in millimeters.
- Arch single-hung windows are not available with the flush fin frame option.

◊ Meets or exceeds clear opening area of 5.7 sq. ft. or 0.53 m², clear opening width of 20" (508) and clear opening height of 24" (610). See table on pages 33 and 41.

*For side heights greater than 6'-5 1/2" (1969), meeting rail location = (side height in inches x 0.33) + 1.96".

Arch Single-Hung Window Opening and Area Specifications

Window Number	Clear Opening Area Sq. Ft./(m²)	Clear Opening in Full Open Position: Width Inches/(mm)	Clear Opening in Full Open Position: Height Inches/(mm)	Glass Area Sq. Ft./(m²)	Vent Area Sq. Ft./(m²)	Top of Subfloor to Top of Inside Sill Stop Inches/(mm)	Overall Window Area Sq. Ft./(m²)
2026	1.53 (0.14)	20" (508)	11 1/16" (280)	3.25 (0.30)	1.53 (0.14)	51 3/8" (1304)	5.16 (0.48)
2030	1.95 (0.18)	20" (508)	14 1/16" (357)	4.03 (0.37)	1.95 (0.18)	45 3/8" (1152)	6.14 (0.57)
2036	2.37 (0.22)	20" (508)	17 1/16" (433)	4.80 (0.45)	2.37 (0.22)	39 3/8" (1000)	7.12 (0.66)
2040	2.78 (0.26)	20" (508)	20 1/16" (509)	5.58 (0.52)	2.78 (0.26)	33 3/8" (847)	8.10 (0.75)
2046	3.20 (0.30)	20" (508)	23 1/16" (585)	6.36 (0.59)	3.20 (0.30)	27 3/8" (695)	9.08 (0.84)
2050	3.62 (0.34)	20" (508)	26 1/16" (661)	7.13 (0.66)	3.62 (0.34)	21 3/8" (542)	10.06 (0.93)
2056	4.03 (0.37)	20" (508)	29 1/16" (738)	7.91 (0.73)	4.03 (0.37)	15 3/8" (390)	11.04 (1.03)
2060	4.45 (0.41)	20" (508)	32 1/16" (814)	8.68 (0.81)	4.45 (0.41)	9 3/8" (238)	12.02 (1.12)
2066	4.87 (0.45)	20" (508)	35 1/16" (890)	9.46 (0.88)	4.87 (0.45)	16 7/8"** (429)**	12.99 (1.21)
2070*	3.48 (0.32)	20" (508)	25 1/16" (636)	10.48 (0.97)	3.48 (0.32)	10 7/8"** (276)**	13.97 (1.30)
2076*	3.76 (0.35)	20" (508)	27 1/16" (687)	11.28 (1.05)	3.76 (0.35)	4 7/8"** (124)**	14.95 (1.39)
2626	1.99 (0.19)	26" (660)	11 1/16" (280)	4.39 (0.41)	1.99 (0.19)	50 9/16" (1284)	6.59 (0.61)
2630	2.53 (0.24)	26" (660)	14 1/16" (357)	5.41 (0.50)	2.53 (0.24)	44 9/16" (1132)	7.82 (0.73)
2636	3.08 (0.29)	26" (660)	17 1/16" (433)	6.44 (0.60)	3.08 (0.29)	38 9/16" (979)	9.05 (0.84)
2640	3.62 (0.34)	26" (660)	20 1/16" (509)	7.46 (0.69)	3.62 (0.34)	32 9/16" (827)	10.28 (0.95)
2646	4.16 (0.39)	26" (660)	23 1/16" (585)	8.49 (0.79)	4.16 (0.39)	26 9/16" (674)	11.51 (1.07)
2650	4.70 (0.44)	26" (660)	26 1/16" (661)	9.52 (0.88)	4.70 (0.44)	20 9/16" (522)	12.74 (1.18)
2656	5.24 (0.49)	26" (660)	29 1/16" (738)	10.54 (0.98)	5.24 (0.49)	14 9/16" (370)	13.97 (1.30)
2660 ◊	5.78 (0.54)	26" (660)	32 1/16" (814)	11.57 (1.07)	5.78 (0.54)	8 9/16" (217)	15.20 (1.41)
2666 ◊	6.33 (0.59)	26" (660)	35 1/16" (890)	12.59 (1.17)	6.33 (0.59)	16 1/16"** (429)**	16.42 (1.53)
2670*	4.52 (0.42)	26" (660)	25 1/16" (636)	13.87 (1.29)	4.52 (0.42)	10 1/16"** (256)**	17.65 (1.64)
2676*	4.88 (0.45)	26" (660)	27 1/16" (687)	14.91 (1.39)	4.88 (0.45)	4 1/16"** (103)**	18.88 (1.75)
3026	2.45 (0.23)	32" (813)	11 1/16" (280)	5.57 (0.52)	2.45 (0.23)	49 3/4" (1263)	8.07 (0.75)
3030	3.12 (0.29)	32" (813)	14 1/16" (357)	6.84 (0.64)	3.12 (0.29)	43 3/4" (1111)	9.54 (0.89)

continued on page 41

- Top of Subfloor to Top of Inside Sill Stop is calculated based upon a structural header height of 6'-10 1/2" (2096) except for XX66, XX70 and XX76 heights, which are calculated using a header height of 8' (2438).
- Dimensions in parentheses are in millimeters or square meters.

◊ Meets or exceeds clear opening area of 5.7 sq. ft. or 0.53 m², clear opening width of 20" (508) and clear opening height of 24" (610).

*Available only with a 2:1 reverse cottage sash ratio.

**Calculated based upon a structural header height of 8' (2438).

Table of Single-Hung Window Sizes

Scale 1/8" (3) = 1'-0" (305) – 1:96

Window Dimension	1'-5 1/2" (445)	1'-11 1/2" (597)	2'-5 1/2" (749)	2'-11 1/2" (902)	3'-5 1/2" (1054)	3'-11 1/2" (1207)
Minimum Rough Opening	1'-6" (457)	2'-0" (610)	2'-6" (762)	3'-0" (914)	3'-6" (1067)	4'-0" (1219)
Unobstructed Glass (height of single sash)	11 1/4" (286)	17 1/4" (438)	23 1/4" (591)	29 1/4" (743)	35 1/4" (895)	41 1/4" (1048)

2:1 sash ratio is not available for heights 6'-5 1/2" (1969) and less.

Reverse cottage sash is available based on a 3:2 ratio. Available in standard widths for the heights shown below.

REVERSE COTTAGE CUSTOM WIDTHS – 17 1/2" (445) **to 47 1/2"** (1207)

REVERSE COTTAGE CUSTOM HEIGHTS – 29 1/2" (749) **to 77 1/2"** (1969)

CUSTOM WIDTHS – 17 1/2" to **47 1/2"**

CUSTOM HEIGHTS – 23 1/2" to **77 1/2"**

Height	1'-5 1/2"	1'-11 1/2"	2'-5 1/2"	2'-11 1/2"	3'-5 1/2"	3'-11 1/2"	Reverse Cottage*
1'-11 1/2" (597) 2'-0" (610) 7 9/16" (192)	1620	2020	2620	3020	3620	4020	
2'-5 1/2" (749) 2'-6" (762) 10 9/16" (268)	1626	2026	2626	3026	3626	4026	3 2
2'-11 1/2" (902) 3'-0" (914) 13 9/16" (345)	1630	2030	2630	3030	3630	4030	
3'-5 1/2" (1054) 3'-6" (1067) 16 9/16" (421)	1636	2036	2636	3036	3636	4036	
3'-11 1/2" (1207) 4'-0" (1219) 19 9/16" (497)	1640	2040	2640	3040	3640	4040	
4'-5 1/2" (1359) 4'-6" (1372) 22 9/16" (573)	1646	2046	2646	3046	3646	4046	
4'-11 1/2" (1511) 5'-0" (1524) 25 9/16" (649)	1650	2050	2650†	3050◊†	3650◊†	4050◊†	
5'-5 1/2" (1664) 5'-6" (1676) 28 9/16" (726)	1656	2056	2656†	3056◊†	3656◊†	4056◊†	
5'-11 1/2" (1816) 6'-0" (1829) 31 9/16" (802)	1660	2060	2660◊†	3060◊†	3660◊†	4060◊†	
6'-5 1/2" (1969) 6'-6" (1981) 34 9/16" (878)	1666	2066	2666◊†	3066◊†	3666◊†	4066◊†	
6'-11 1/2" (2121) 7'-0" (2134) 50 7/16" (1282) – 24 5/8" (626)	1670	2070	2670†	3070†	3670◊†	4070◊†	

CUSTOM HEIGHTS

continued on next page

Custom-size windows are available in 1/8" (3) increments. See page 96 for custom sizes and specifications.

For construction site convenience, an optional drywall pass-through window is available for removal and reinstallation of the upper and lower sash.

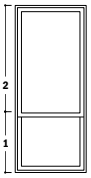

Windows with a height greater than 6'-5 1/2" (1969) are only available with a 2:1 reverse cottage sash ratio.** To see all windows sizes with reverse cottage sash, visit **andersenwindows.com/sizing**.

Grille patterns shown on page 49.

Details shown on pages 52-54.

- Window Dimension always refers to outside frame-to-frame dimension.
- **Minimum Rough Opening dimensions may need to be increased to allow for use of building wraps, flashing, sill panning, brackets, fasteners or other items. See page 121 for more details.**
- Dimensions in parentheses are in millimeters.

◊Meets or exceeds clear opening area of 5.7 sq. ft. or 0.53 m², clear opening width of 20" (508) and clear opening height of 24" (610). See table on page 35.

†Drywall pass-through window available for these standard and reverse cottage sizes and for custom-size windows wider than 1'-11 1/2" (597) and taller than 4'-5 1/2" (1359).

*For reverse cottage sash windows, meeting rail location = (window height in inches x 0.40) + 1.96".

**For heights greater than 6'-5 1/2" (1969), meeting rail location = (window height in inches x 0.33) + 1.96".

Table of Single-Hung Window Sizes *(continued)*

Scale 1/8" (3) = 1'-0" (305) – 1:96

Window Dimension	1'-5 1/2" (445)	1'-11 1/2" (597)	2'-5 1/2" (749)	2'-11 1/2" (902)	3'-5 1/2" (1054)	3'-11 1/2" (1207)
Minimum Rough Opening	1'-6" (457)	2'-0" (610)	2'-6" (762)	3'-0" (914)	3'-6" (1067)	4'-0" (1219)
Unobstructed Glass	11 1/4" (286)	17 1/4" (438)	23 1/4" (591)	29 1/4" (743)	35 1/4" (895)	41 1/4" (1048)

CUSTOM WIDTHS

CUSTOM HEIGHTS

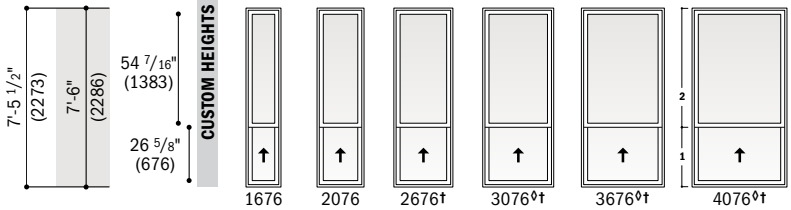

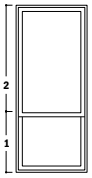

Notes on previous page also apply to this page.

Windows with a height greater than 6'-5 1/2" (1969) are only available with a 2:1 reverse cottage sash ratio.* To see all windows sizes with reverse cottage sash, visit **andersenwindows.com/sizing**.

• Window Dimension always refers to outside frame-to-frame dimension.
• **Minimum Rough Opening dimensions may need to be increased to allow for use of building wraps, flashing, sill panning, brackets, fasteners or other items. See page 121 for more details.**
• Dimensions in parentheses are in millimeters.
◊Meets or exceeds clear opening area of 5.7 sq. ft. or 0.53 m², clear opening width of 20" (508) and clear opening height of 24" (610). See table below.
†Drywall pass-through window available for these standard and reverse cottage sizes and for custom-size windows wider than 1'-11 1/2" (597) and taller than 4'-5 1/2" (1359).
*For heights greater than 6'-5 1/2" (1969), meeting rail location = (window height in inches x 0.33) + 1.96".

Single-Hung Window Opening and Area Specifications

Window Number	Clear Opening Area Sq. Ft./(m²)		Clear Opening in Full Open Position: Width Inches/(mm)		Clear Opening in Full Open Position: Height Inches/(mm)		Glass Area Sq. Ft./(m²)		Vent Area Sq. Ft./(m²)		Top of Subfloor to Top of Inside Sill Stop Inches/(mm)		Overall Window Area Sq. Ft./(m²)	
1620	0.78	(0.07)	14"	(356)	8 1/16"	(204)	1.18	(0.11)	0.78	(0.07)	60 1/2"	(1537)	2.86	(0.27)
1626	1.07	(0.10)	14"	(356)	11 1/16"	(280)	1.65	(0.15)	1.07	(0.10)	54 1/2"	(1384)	3.59	(0.33)
1630	1.37	(0.13)	14"	(356)	14 1/16"	(357)	2.12	(0.20)	1.37	(0.13)	48 1/2"	(1232)	4.31	(0.40)
1636	1.66	(0.15)	14"	(356)	17 1/16"	(433)	2.59	(0.24)	1.66	(0.15)	42 1/2"	(1080)	5.04	(0.47)
1640	1.95	(0.18)	14"	(356)	20 1/16"	(509)	3.05	(0.28)	1.95	(0.18)	36 1/2"	(927)	5.77	(0.54)
1646	2.24	(0.21)	14"	(356)	23 1/16"	(585)	3.52	(0.33)	2.24	(0.21)	30 1/2"	(775)	6.50	(0.60)
1650	2.53	(0.24)	14"	(356)	26 1/16"	(661)	3.99	(0.37)	2.53	(0.24)	24 1/2"	(622)	7.23	(0.67)
1656	2.82	(0.26)	14"	(356)	29 1/16"	(738)	4.46	(0.41)	2.82	(0.26)	18 1/2"	(470)	7.96	(0.74)
1660	3.12	(0.29)	14"	(356)	32 1/16"	(814)	4.93	(0.46)	3.12	(0.29)	12 1/2"	(318)	8.69	(0.81)
1666	3.41	(0.32)	14"	(356)	35 1/16"	(890)	5.40	(0.50)	3.41	(0.32)	6 1/2"	(165)	9.42	(0.88)
1670*	2.43	(0.23)	14"	(356)	25 1/16"	(636)	5.87	(0.55)	2.43	(0.23)	14"**	(356)**	10.15	(0.94)
1676*	2.63	(0.24)	14"	(356)	27 1/16"	(687)	6.34	(0.59)	2.63	(0.24)	8"**	(203)**	10.88	(1.01)
2020	1.12	(0.10)	20"	(508)	8 1/16"	(204)	1.81	(0.17)	1.12	(0.10)	60 1/2"	(1537)	3.84	(0.36)
2026	1.53	(0.14)	20"	(508)	11 1/16"	(280)	2.53	(0.24)	1.53	(0.14)	54 1/2"	(1384)	4.81	(0.45)
2030	1.95	(0.18)	20"	(508)	14 1/16"	(357)	3.25	(0.30)	1.95	(0.18)	48 1/2"	(1232)	5.79	(0.54)
2036	2.37	(0.22)	20"	(508)	17 1/16"	(433)	3.96	(0.37)	2.37	(0.22)	42 1/2"	(1080)	6.77	(0.63)
2040	2.78	(0.26)	20"	(508)	20 1/16"	(509)	4.68	(0.44)	2.78	(0.26)	36 1/2"	(927)	7.75	(0.72)
2046	3.20	(0.30)	20"	(508)	23 1/16"	(585)	5.40	(0.50)	3.20	(0.30)	30 1/2"	(775)	8.73	(0.81)
2050	3.62	(0.34)	20"	(508)	26 1/16"	(661)	6.12	(0.57)	3.62	(0.34)	24 1/2"	(622)	9.71	(0.90)
2056	4.03	(0.38)	20"	(508)	29 1/16"	(738)	6.84	(0.64)	4.03	(0.38)	18 1/2"	(470)	10.69	(0.99)
2060	4.45	(0.41)	20"	(508)	32 1/16"	(814)	7.56	(0.70)	4.45	(0.41)	12 1/2"	(318)	11.67	(1.08)
2066	4.87	(0.45)	20"	(508)	35 1/16"	(890)	8.28	(0.77)	4.87	(0.45)	6 1/2"	(165)	12.65	(1.18)
2070*	3.48	(0.32)	20"	(508)	25 1/16"	(636)	9.00	(0.84)	3.48	(0.32)	14"**	(356)**	13.63	(1.27)
2076*	3.76	(0.35)	20"	(508)	27 1/16"	(687)	9.71	(0.90)	3.76	(0.35)	8"**	(203)**	14.61	(1.36)
2620	1.45	(0.14)	26"	(660)	8 1/16"	(204)	2.44	(0.23)	1.45	(0.14)	60 1/2"	(1537)	4.81	(0.45)
2626	1.99	(0.19)	26"	(660)	11 1/16"	(280)	3.41	(0.32)	1.99	(0.19)	54 1/2"	(1384)	6.04	(0.56)
2630	2.54	(0.24)	26"	(660)	14 1/16"	(357)	4.37	(0.41)	2.54	(0.24)	48 1/2"	(1232)	7.27	(0.68)
2636	3.08	(0.29)	26"	(660)	17 1/16"	(433)	5.34	(0.50)	3.08	(0.29)	42 1/2"	(1080)	8.50	(0.79)
2640	3.62	(0.34)	26"	(660)	20 1/16"	(509)	6.31	(0.59)	3.62	(0.34)	36 1/2"	(927)	9.73	(0.90)
2646	4.16	(0.39)	26"	(660)	23 1/16"	(585)	7.28	(0.68)	4.16	(0.39)	30 1/2"	(775)	10.96	(1.02)
2650	4.70	(0.44)	26"	(660)	26 1/16"	(661)	8.25	(0.77)	4.70	(0.44)	24 1/2"	(622)	12.19	(1.13)
2656	5.24	(0.49)	26"	(660)	29 1/16"	(738)	9.22	(0.86)	5.24	(0.49)	18 1/2"	(470)	13.42	(1.25)
2660◊	5.79	(0.54)	26"	(660)	32 1/16"	(814)	10.19	(0.95)	5.79	(0.54)	12 1/2"	(318)	14.65	(1.36)
2666◊	6.33	(0.59)	26"	(660)	35 1/16"	(890)	11.16	(1.04)	6.33	(0.45)	6 1/2"	(165)	15.88	(1.48)
2670*	4.52	(0.42)	26"	(660)	25 1/16"	(636)	12.12	(1.13)	4.52	(0.42)	14"**	(356)**	17.11	(1.59)
2676*	4.88	(0.45)	26"	(660)	27 1/16"	(687)	13.09	(1.22)	4.88	(0.45)	8"**	(203)**	18.34	(1.70)

continued on page 41

For reverse cottage, twin and triple single-hung window specifications, see pages 43, 45 and 47.

• Top of Subfloor to Top of Inside Sill Stop is calculated based upon a structural header height of 6'-10 1/2" (2096) except for XX70 and XX76 heights, which are calculated using a header height of 8' (2438).
• Dimensions in parentheses are in millimeters or square meters.
◊Meets or exceeds clear opening area of 5.7 sq. ft. or 0.53 m², clear opening width of 20" (508) and clear opening height of 24" (610).
*Available only with a 2:1 reverse cottage sash ratio.
**Calculated based upon a structural header height of 8' (2438).

Table of Twin and Triple Single-Hung Window Sizes

Scale 1/8" (3) = 1'-0" (305) – 1:96

Notes on next page also apply to this page.

Window Dimension	2'-11 1/2" (902)	3'-11 1/2" (1207)	4'-11 1/2" (1511)	5'-11 1/2" (1816)	6'-11 1/2" (2121)	7'-11 1/2" (2426)	4'-5 1/2" (1359)
Minimum Rough Opening	3'-0" (914)	4'-0" (1219)	5'-0" (1524)	6'-0" (1829)	7'-0" (2134)	8'-0" (2438)	4'-6" (1372)
Unobstructed Glass (width of single sash)	11 1/4" (286)	17 1/4" (438)	23 1/4" (591)	29 1/4" (743)	35 1/4" (895)	41 1/4" (1048)	11 1/4" (286)

CUSTOM WIDTHS TWIN – 35 1/2" to **95 1/2"**

CUSTOM HEIGHTS – 23 1/2" to **71 1/2"**

11 1/2" (292)	1'-0" (305)	5 1/4" (133)	1610-2	2010-2	2610-2	3010-2	3610-2	4010-2	1610-3
1'-5 1/2" (445)	1'-6" (457)	11 1/4" (286)	1616-2	2016-2	2616-2	3016-2	3616-2	4016-2	1616-3
1'-11 1/2" (597)	2'-0" (610)	17 1/4" (438)	1620-2	2020-2	2620-2	3020-2	3620-2	4020-2	1620-3
1'-11 1/2" (597)	2'-0" (610)	7 9/16" (192)	1620-2	2020-2	2620-2	3020-2	3620-2	4020-2	1620-3
2'-5 1/2" (749)	2'-6" (762)	10 9/16" (268)	1626-2	2026-2	2626-2	3026-2	3626-2	4026-2	1626-3
2'-11 1/2" (902)	3'-0" (914)	13 9/16" (345)	1630-2	2030-2	2630-2	3030-2	3630-2	4030-2	1630-3
3'-5 1/2" (1054)	3'-6" (1067)	16 9/16" (421)	1636-2	2036-2	2636-2	3036-2	3636-2	4036-2	1636-3
3'-11 1/2" (1207)	4'-0" (1219)	19 9/16" (497)	1640-2	2040-2	2640-2	3040-2	3640-2	4040-2	1640-3
4'-5 1/2" (1359)	4'-6" (1372)	22 9/16" (573)	1646-2	2046-2	2646-2	3046-2	3646-2	4046-2	1646-3
4'-11 1/2" (1511)	5'-0" (1524)	25 9/16" (649)	1650-2	2050-2	2650-2	3050-2◊	3650-2◊	4050-2◊	1650-3
5'-5 1/2" (1664)	5'-6" (1676)	28 9/16" (726)	1656-2	2056-2	2656-2	3056-2◊	3656-2◊	4056-2◊	1656-3
5'-11 1/2" (1816)	6'-0" (1829)	31 9/16" (802)	1660-2	2060-2	2660-2◊	3060-2◊	3660-2◊	4060-2◊	1660-3

- Window Dimension always refers to outside frame-to-frame dimension.
- **Minimum Rough Opening dimensions may need to be increased to allow for use of building wraps, flashing, sill panning, brackets, fasteners or other items. See page 121 for more details.**
- Dimensions in parentheses are in millimeters.

◊ Meets or exceeds clear opening area of 5.7 sq. ft. 0.53 m², clear opening width of 20" (508) and clear opening height of 24" (610). See tables on pages 45 and 47.

5'-11 1/2" (1816)	7'-5 1/2" (2273)	8'-11 1/2" (2731)	10'-5 1/2" (3188)	11'-11 1/2" (3645)
6'-0" (1829)	7'-6" (2286)	9'-0" (2743)	10'-6" (3200)	12'-0" (3658)
17 1/4" (438)	23 1/4" (591)	29 1/4" (743)	35 1/4" (895)	41 1/4" (1048)

CUSTOM WIDTHS TRIPLE – 53 1/2" to 143 1/2"

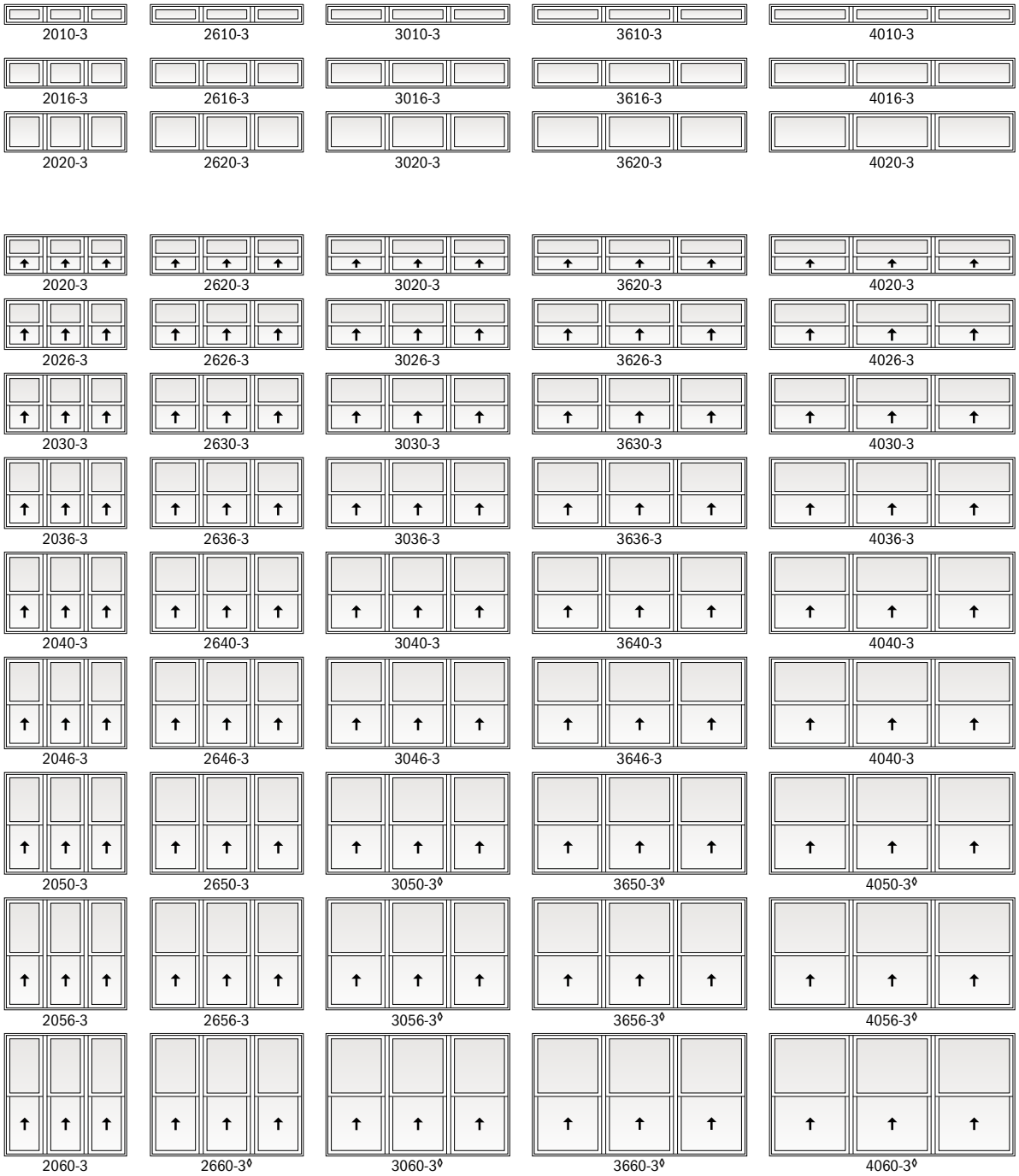

Custom-size windows are available in 1/8" (3) increments. See page 96 for custom sizes and specifications.

Windows have one continuous outer frame.

Matching transom windows are also shown. See Picture, Transom & Specialty Windows section starting on page 68 for more information.

Grille patterns shown on page 49. Details shown on pages 52-54.

• Window Dimension always refers to outside frame-to-frame dimension.
• **Minimum Rough Opening dimensions may need to be increased to allow for use of building wraps, flashing, sill panning, brackets, fasteners or other items. See page 121 for more details.**
• Dimensions in parentheses are in millimeters.
◊ Meets or exceeds clear opening area of 5.7 sq. ft. or 0.53 m², clear opening width of 20" (508) and clear opening height of 24" (610). See tables on pages 45 and 47.

Table of 10-High Transom Window Over Single-Hung Sizes

Scale 1/8" (3) = 1'-0" (305) – 1:96

Window Dimension	1'-5 1/2" (445)	1'-11 1/2" (597)	2'-5 1/2" (749)	2'-11 1/2" (902)	3'-5 1/2" (1054)	3'-11 1/2" (1207)
Minimum Rough Opening	1'-6" (457)	2'-0" (610)	2'-6" (762)	3'-0" (914)	3'-6" (1067)	4'-0" (1219)
Unobstructed Glass (height of individual single-hung sash only)	11 1/4" (286)	17 1/4" (438)	23 1/4" (591)	29 1/4" (743)	35 1/4" (895)	41 1/4" (1048)

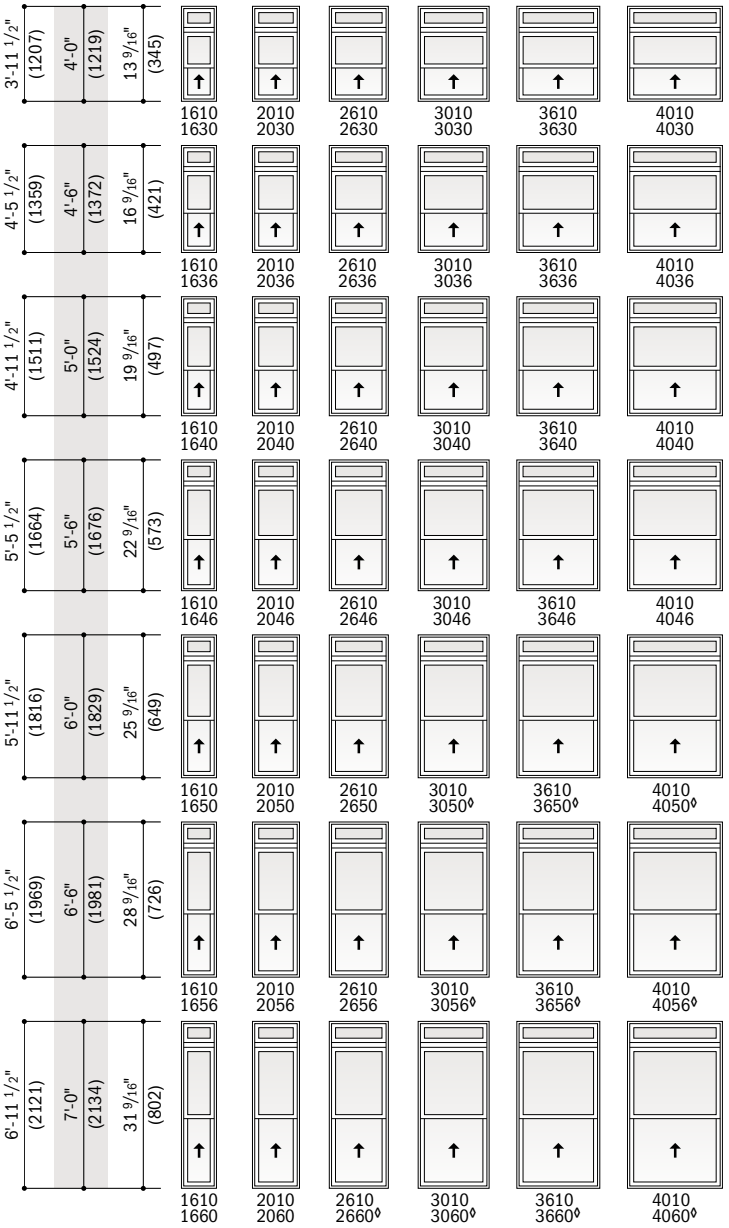

Windows have one continuous outer frame.

Unobstructed glass height dimension of upper transom sash is 5 1/4" (133).

Grille patterns shown on page 49.

Details shown on pages 52-54.

• Window Dimension always refers to outside frame-to-frame dimension.
• **Minimum Rough Opening dimensions may need to be increased to allow for use of building wraps, flashing, sill panning, brackets, fasteners or other items. See page 121 for more details.**
• Dimensions in parentheses are in millimeters.
◊ Meets or exceeds clear opening area of 5.7 sq. ft. or 0.53 m², clear opening width of 20" (508) and clear opening height of 24" (610).

Table of 16-High Transom Window Over Single-Hung Sizes

Scale 1/8" (3) = 1'-0" (305) – 1:96

Window Dimension	1'-5 1/2" (445)	1'-11 1/2" (597)	2'-5 1/2" (749)	2'-11 1/2" (902)	3'-5 1/2" (1054)	3'-11 1/2" (1207)
Minimum Rough Opening	1'-6" (457)	2'-0" (610)	2'-6" (762)	3'-0" (914)	3'-6" (1067)	4'-0" (1219)
Unobstructed Glass (height of individual single-hung sash only)	11 1/4" (286)	17 1/4" (438)	23 1/4" (591)	29 1/4" (743)	35 1/4" (895)	41 1/4" (1048)
4'-5 1/2" (1359) / 4'-6" (1372) / 13 9/16" (345)	1616 1630	2016 2030	2616 2630	3016 3030	3616 3630	4016 4030
4'-11 1/2" (1511) / 5'-0" (1524) / 16 9/16" (421)	1616 1636	2016 2036	2616 2636	3016 3036	3616 3636	4016 4036
5'-5 1/2" (1664) / 5'-6" (1676) / 19 9/16" (497)	1616 1640	2016 2040	2616 2640	3016 3040	3616 3640	4016 4040
5'-11 1/2" (1816) / 6'-0" (1829) / 22 9/16" (573)	1616 1646	2016 2046	2616 2646	3016 3046	3616 3646	4016 4046
6'-5 1/2" (1969) / 6'-6" (1981) / 25 9/16" (649)	1616 1650	2016 2050	2616 2650	3016 3050◊	3616 3650◊	4016 4050◊
6'-11 1/2" (2121) / 7'-0" (2134) / 28 9/16" (726)	1616 1656	2016 2056	2616 2656	3016 3056◊	3616 3656◊	4016 4056◊
7'-5 1/2" (2273) / 7'-6" (2286) / 31 9/16" (802)	1616 1660	2016 2060	2616 2660◊	3016 3060◊	3616 3660◊	4016 4060◊

Windows have one continuous outer frame.

Unobstructed glass height dimension of upper transom sash is 11 1/4" (286).

Grille patterns shown on page 49.

Details shown on pages 52-54.

- Window Dimension always refers to outside frame-to-frame dimension.
- **Minimum Rough Opening dimensions may need to be increased to allow for use of building wraps, flashing, sill panning, brackets, fasteners or other items. See page 121 for more details.**
- Dimensions in parentheses are in millimeters.

◊ Meets or exceeds clear opening area of 5.7 sq.ft. or 0.53 m², clear opening width of 20" (508) and clear opening height of 24" (610).

Table of 20-High Transom Window Over Single-Hung Sizes

Scale 1/8" (3) = 1'-0" (305) – 1:96

Window Dimension	1'-5 1/2" (445)	1'-11 1/2" (597)	2'-5 1/2" (749)	2'-11 1/2" (902)	3'-5 1/2" (1054)	3'-11 1/2" (1207)
Minimum Rough Opening	1'-6" (457)	2'-0" (610)	2'-6" (762)	3'-0" (914)	3'-6" (1067)	4'-0" (1219)
Unobstructed Glass (height of individual single-hung sash only)	11 1/4" (286)	17 1/4" (438)	23 1/4" (591)	29 1/4" (743)	35 1/4" (895)	41 1/4" (1048)

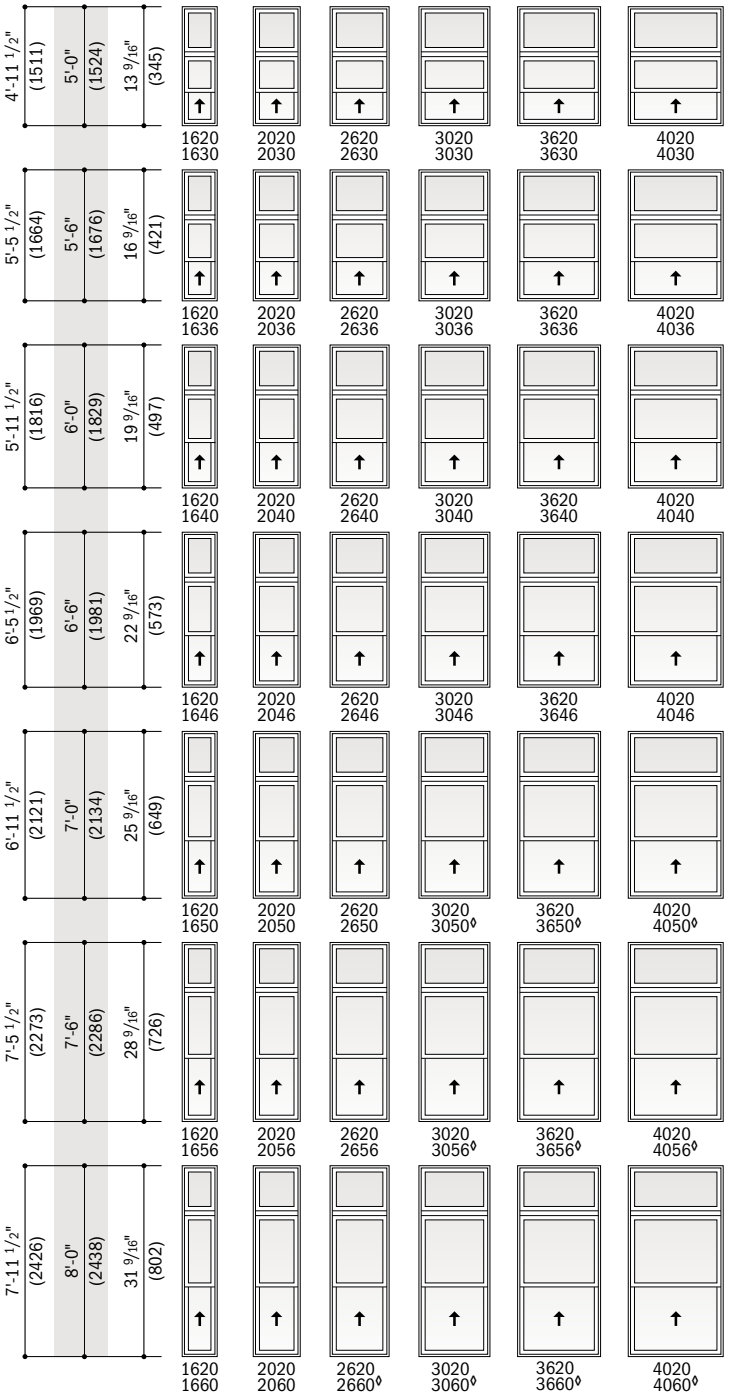

Windows have one continuous outer frame.

Unobstructed glass height dimension of upper transom sash is 17 1/4" (438).

Grille patterns shown on page 49.

Details shown on pages 52-54.

• Window Dimension always refers to outside frame-to-frame dimension.
• **Minimum Rough Opening dimensions may need to be increased to allow for use of building wraps, flashing, sill panning, brackets, fasteners or other items. See page 121 for more details.**
• Dimensions in parentheses are in millimeters.
◊ Meets or exceeds clear opening area of 5.7 sq. ft. or 0.53 m², clear opening width of 20" (508) and clear opening height of 24" (610).

Arch Single-Hung Window Opening and Area Specifications *(continued from page 33)*

Window Number	Clear Opening Area Sq. Ft./(m²)		Clear Opening in Full Open Position Width Inches/(mm)		Height Inches/(mm)		Glass Area Sq. Ft./(m²)		Vent Area Sq. Ft./(m²)		Top of Subfloor to Top of Inside Sill Stop Inches/(mm)		Overall Window Area Sq. Ft./(m²)	
3036	3.79	(0.35)	32"	(813)	17 1/16"	(433)	8.12	(0.75)	3.79	(0.35)	37 3/4"	(959)	11.02	(1.02)
3040	4.45	(0.41)	32"	(813)	20 1/16"	(509)	9.39	(0.87)	4.45	(0.41)	31 3/4"	(806)	12.50	(1.16)
3046	5.12	(0.48)	32"	(813)	23 1/16"	(585)	10.67	(0.99)	5.12	(0.48)	25 3/4"	(654)	13.98	(1.30)
3050 ◊	5.79	(0.54)	32"	(813)	26 1/16"	(661)	11.95	(1.11)	5.79	(0.54)	19 3/4"	(501)	15.46	(1.44)
3056 ◊	6.45	(0.60)	32"	(813)	29 1/16"	(738)	13.22	(1.23)	6.45	(0.60)	13 3/4"	(349)	16.94	(1.57)
3060 ◊	7.12	(0.66)	32"	(813)	32 1/16"	(814)	14.50	(1.35)	7.12	(0.66)	7 3/4"	(197)	18.42	(1.71)
3066 ◊	7.79	(0.72)	32"	(813)	35 1/16"	(890)	15.77	(1.47)	7.79	(0.72)	15 1/4"**	(387)**	19.90	(1.85)
3070*	5.56	(0.52)	32"	(813)	25 1/16"	(636)	17.30	(1.61)	5.56	(0.52)	9 1/4"**	(235)**	21.38	(1.99)
3076 ◊*	6.01	(0.56)	32"	(813)	27 1/16"	(687)	18.59	(1.73)	6.01	(0.56)	3 1/4"**	(83)**	22.86	(2.12)
3626	2.91	(0.27)	38"	(965)	11 1/16"	(280)	6.79	(0.63)	2.91	(0.27)	48 15/16"	(1243)	9.59	(0.89)
3630	3.70	(0.34)	38"	(965)	14 1/16"	(357)	8.32	(0.77)	3.70	(0.34)	42 15/16"	(1091)	11.31	(1.05)
3636	4.50	(0.42)	38"	(965)	17 1/16"	(433)	9.84	(0.91)	4.50	(0.42)	36 15/16"	(938)	13.04	(1.21)
3640	5.29	(0.49)	38"	(965)	20 1/16"	(509)	11.37	(1.06)	5.29	(0.49)	30 15/16"	(786)	14.77	(1.37)
3646	6.08	(0.56)	38"	(965)	23 1/16"	(585)	12.89	(1.20)	6.08	(0.56)	24 15/16"	(633)	16.50	(1.53)
3650 ◊	6.87	(0.64)	38"	(965)	26 1/16"	(661)	14.42	(1.34)	6.87	(0.64)	18 15/16"	(481)	18.23	(1.69)
3656 ◊	7.66	(0.71)	38"	(965)	29 1/16"	(738)	15.95	(1.48)	7.66	(0.71)	12 15/16"	(329)	19.96	(1.85)
3660 ◊	8.45	(0.79)	38"	(965)	32 1/16"	(814)	17.47	(1.62)	8.45	(0.79)	6 15/16"	(176)	21.69	(2.02)
3666 ◊	9.25	(0.86)	38"	(965)	35 1/16"	(890)	19.00	(1.77)	9.25	(0.86)	14 7/16"**	(367)**	23.42	(2.18)
3670 ◊*	6.61	(0.61)	38"	(965)	25 1/16"	(636)	20.77	(1.93)	6.61	(0.61)	8 7/16"**	(214)**	25.15	(2.34)
3676 ◊*	7.14	(0.66)	38"	(965)	27 1/16"	(687)	22.32	(2.07)	7.14	(0.66)	2 7/16"**	(62)**	26.88	(2.50)

• Top of Subfloor to Top of Inside Sill Stop is calculated based upon a structural header height of 6'-10 1/2" (2096) except for XX66, XX70 and XX76 heights, which are calculated using a header height of 8' (2438).
• Dimensions in parentheses are in millimeters or square meters.
◊ Meets or exceeds clear opening area of 5.7 sq. ft. or 0.53 m², clear opening width of 20" (508) and clear opening height of 24" (610).
*Available only with a 2:1 reverse cottage sash ratio.
**Calculated based upon a structural header height of 8' (2438).

Single-Hung Window Opening and Area Specifications *(continued from page 35)*

Window Number	Clear Opening Area Sq. Ft./(m²)		Clear Opening in Full Open Position Width Inches/(mm)		Height Inches/(mm)		Glass Area Sq. Ft./(m²)		Vent Area Sq. Ft./(m²)		Top of Subfloor to Top of Inside Sill Stop Inches/(mm)		Overall Window Area Sq. Ft./(m²)	
3020	1.79	(0.17)	32"	(813)	8 1/16"	(204)	3.07	(0.29)	1.79	(0.17)	60 1/2"	(1537)	5.79	(0.54)
3026	2.45	(0.23)	32"	(813)	11 1/16"	(280)	4.28	(0.40)	2.45	(0.23)	54 1/2"	(1384)	7.27	(0.68)
3030	3.12	(0.29)	32"	(813)	14 1/16"	(357)	5.50	(0.51)	3.12	(0.29)	48 1/2"	(1232)	8.75	(0.81)
3036	3.79	(0.35)	32"	(813)	17 1/16"	(433)	6.72	(0.62)	3.79	(0.35)	42 1/2"	(1080)	10.23	(0.95)
3040	4.45	(0.41)	32"	(813)	20 1/16"	(509)	7.94	(0.74)	4.45	(0.41)	36 1/2"	(927)	11.71	(1.09)
3046	5.12	(0.48)	32"	(813)	23 1/16"	(585)	9.16	(0.85)	5.12	(0.48)	30 1/2"	(775)	13.19	(1.23)
3050 ◊	5.79	(0.54)	32"	(813)	26 1/16"	(661)	10.38	(0.96)	5.79	(0.54)	24 1/2"	(622)	14.67	(1.36)
3056 ◊	6.45	(0.60)	32"	(813)	29 1/16"	(738)	11.60	(1.08)	6.45	(0.60)	18 1/2"	(470)	16.15	(1.50)
3060 ◊	7.12	(0.66)	32"	(813)	32 1/16"	(814)	12.82	(1.19)	7.12	(0.66)	12 1/2"	(318)	17.63	(1.64)
3066 ◊	7.79	(0.72)	32"	(813)	35 1/16"	(890)	14.03	(1.30)	7.79	(0.72)	6 1/2"	(165)	19.11	(1.78)
3070*	5.56	(0.52)	32"	(813)	25 1/16"	(636)	15.25	(1.42)	5.56	(0.52)	14"**	(356)**	20.59	(1.91)
3076 ◊*	6.01	(0.56)	32"	(813)	27 1/16"	(687)	16.47	(1.53)	6.01	(0.56)	8"**	(203)**	22.06	(2.05)
3620	2.12	(0.20)	38"	(965)	8 1/16"	(204)	3.69	(0.34)	2.12	(0.20)	60 1/2"	(1537)	6.77	(0.63)
3626	2.91	(0.27)	38"	(965)	11 1/16"	(280)	5.16	(0.48)	2.91	(0.27)	54 1/2"	(1384)	8.50	(0.79)
3630	3.71	(0.34)	38"	(965)	14 1/16"	(357)	6.63	(0.62)	3.71	(0.34)	48 1/2"	(1232)	10.23	(0.95)
3636	4.50	(0.42)	38"	(965)	17 1/16"	(433)	8.10	(0.75)	4.50	(0.42)	42 1/2"	(1080)	11.96	(1.11)
3640	5.29	(0.49)	38"	(965)	20 1/16"	(509)	9.57	(0.89)	5.29	(0.49)	36 1/2"	(927)	13.69	(1.27)
3646	6.08	(0.57)	38"	(965)	23 1/16"	(585)	11.04	(1.03)	6.08	(0.57)	30 1/2"	(775)	15.42	(1.43)
3650 ◊	6.87	(0.64)	38"	(965)	26 1/16"	(661)	12.51	(1.16)	6.87	(0.64)	24 1/2"	(622)	17.15	(1.59)
3656 ◊	7.66	(0.71)	38"	(965)	29 1/16"	(738)	13.98	(1.30)	7.66	(0.71)	18 1/2"	(470)	18.88	(1.75)
3660 ◊	8.46	(0.79)	38"	(965)	32 1/16"	(814)	15.44	(1.44)	8.46	(0.79)	12 1/2"	(318)	20.61	(1.91)
3666 ◊	9.25	(0.86)	38"	(965)	35 1/16"	(890)	16.91	(1.57)	9.25	(0.86)	6 1/2"	(165)	22.34	(2.08)
3670 ◊*	6.61	(0.61)	38"	(965)	25 1/16"	(636)	18.38	(1.71)	6.61	(0.61)	14"**	(356)**	24.06	(2.24)
3676 ◊*	7.14	(0.66)	38"	(965)	27 1/16"	(687)	19.85	(1.84)	7.14	(0.66)	8"**	(203)**	25.79	(2.40)
4020	2.46	(0.23)	44"	(1118)	8 1/16"	(204)	4.32	(0.40)	2.46	(0.23)	60 1/2"	(1537)	7.75	(0.72)
4026	3.37	(0.31)	44"	(1118)	11 1/16"	(280)	6.04	(0.56)	3.37	(0.31)	54 1/2"	(1384)	9.73	(0.90)
4030	4.29	(0.40)	44"	(1118)	14 1/16"	(357)	7.76	(0.72)	4.29	(0.40)	48 1/2"	(1232)	11.71	(1.09)
4036	5.21	(0.48)	44"	(1118)	17 1/16"	(433)	9.48	(0.88)	5.21	(0.48)	42 1/2"	(1080)	13.69	(1.27)
4040	6.12	(0.57)	44"	(1118)	20 1/16"	(509)	11.20	(1.04)	6.12	(0.57)	36 1/2"	(927)	15.67	(1.46)
4046	7.04	(0.65)	44"	(1118)	23 1/16"	(585)	12.92	(1.20)	7.04	(0.65)	30 1/2"	(775)	17.65	(1.64)
4050 ◊	7.96	(0.74)	44"	(1118)	26 1/16"	(661)	14.64	(1.36)	7.96	(0.74)	24 1/2"	(622)	19.63	(1.82)
4056 ◊	8.87	(0.82)	44"	(1118)	29 1/16"	(738)	16.35	(1.52)	8.87	(0.82)	18 1/2"	(470)	21.61	(2.01)
4060 ◊	9.79	(0.91)	44"	(1118)	32 1/16"	(814)	18.07	(1.68)	9.79	(0.91)	12 1/2"	(318)	23.59	(2.19)
4066 ◊	10.71	(1.00)	44"	(1118)	35 1/16"	(890)	19.79	(1.84)	10.70	(1.00)	6 1/2"	(165)	25.56	(2.38)
4070 ◊*	7.65	(0.71)	44"	(1118)	25 1/16"	(636)	21.51	(2.00)	7.65	(0.71)	14"**	(356)**	27.54	(2.56)
4076 ◊*	8.26	(0.77)	44"	(1118)	27 1/16"	(687)	23.23	(2.16)	8.26	(0.77)	8"**	(203)**	29.52	(2.74)

For reverse cottage, twin and triple single-hung window specifications, see pages 43, 45 and 47.

• Top of Subfloor to Top of Inside Sill Stop is calculated based upon a structural header height of 6'-10 1/2" (2096) except for XX70 and XX76 heights, which are calculated using a header height of 8' (2438).
• Dimensions in parentheses are in millimeters or square meters.
◊ Meets or exceeds clear opening area of 5.7 sq. ft. or 0.53 m², clear opening width of 20" (508) and clear opening height of 24" (610).
*Available only with a 2:1 reverse cottage sash ratio.
**Calculated based upon a structural header height of 8' (2438).

Table of Picture Window With Flanking 16-Wide Single-Hungs Sizes

Scale 1/8" (3) = 1'-0" (305) — 1:96

Window Dimension	5'-11 1/2" (1816)	6'-5 1/2" (1969)	6'-11 1/2" (2121)	7'-5 1/2" (2273)	7'-11 1/2" (2426)	8'-5 1/2" (2578)
Minimum Rough Opening	6'-0" (1829)	6'-6" (1981)	7'-0" (2134)	7'-6" (2286)	8'-0" (2438)	8'-6" (2591)
Unobstructed Glass (center sash only)	29 1/4" (743)	35 1/4" (895)	41 1/4" (1048)	47 1/4" (1200)	53 1/4" (1353)	59 1/4" (1505)

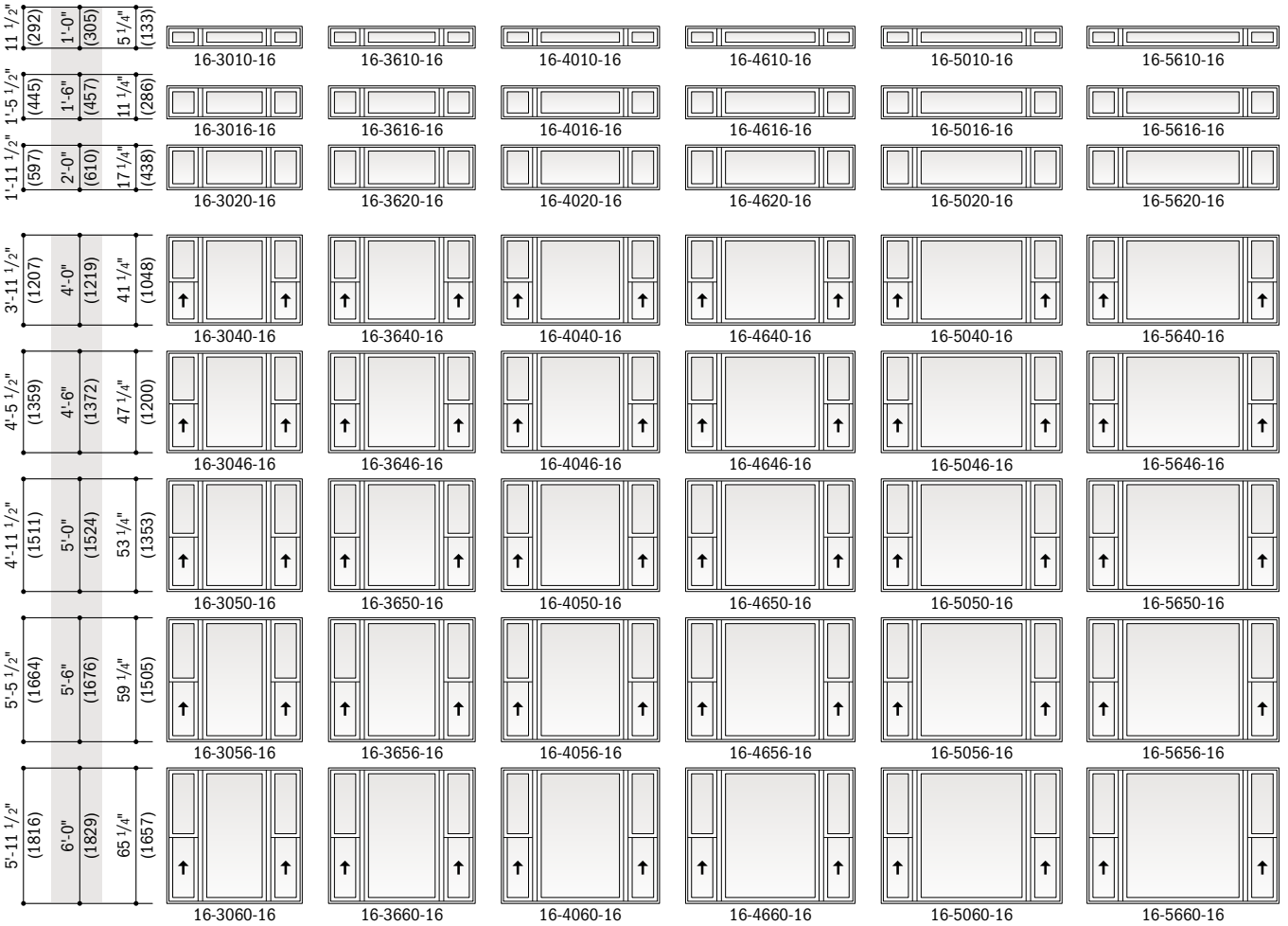

Windows have one continuous outer frame.

Unobstructed glass width dimension of flanking sash is 11 1/4" (286).

For unobstructed glass height dimensions of flanking single-hungs, see page 34.

Matching transom windows are also shown. See Picture, Transom & Specialty Windows section starting on page 68 for more information.

Grille patterns shown on page 49. Details shown on pages 52-54.

• Window Dimension always refers to outside frame-to-frame dimension.
• **Minimum Rough Opening dimensions may need to be increased to allow for use of building wraps, flashing, sill panning, brackets, fasteners or other items. See page 121 for more details.**
• Dimensions in parentheses are in millimeters.

See notes on previous page.

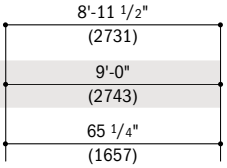

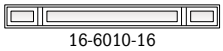
16-6010-16

16-6016-16

16-6020-16

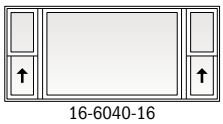
16-6040-16

16-6046-16

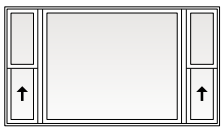
16-6050-16

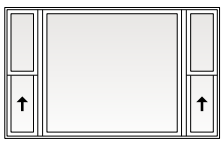
16-6056-16

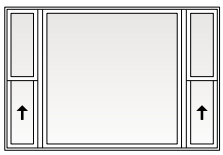
16-6060-16

Single-Hung Window Opening and Area Specifications – 3:2 Reverse Cottage Sash Ratio

Window Number	Clear Opening Area Sq. Ft./(m²)	Clear Opening in Full Open Position: Width Inches/(mm)	Clear Opening in Full Open Position: Height Inches/(mm)	Glass Area Sq. Ft./(m²)	Vent Area Sq. Ft./(m²)	Top of Subfloor to Top of Inside Sill Stop Inches/(mm)	Overall Window Area Sq. Ft./(m²)
1626	0.88 (0.08)	14" (356)	9 1/16" (230)	1.65 (0.15)	0.88 (0.08)	54 1/2" (1384)	3.59 (0.33)
1630	1.07 (0.10)	14" (356)	11 1/16" (280)	2.12 (0.20)	1.07 (0.10)	48 1/2" (1232)	4.31 (0.40)
1636	1.37 (0.13)	14" (356)	14 1/16" (357)	2.59 (0.24)	1.37 (0.13)	42 1/2" (1080)	5.04 (0.47)
1640	1.56 (0.15)	14" (356)	16 1/16" (407)	3.05 (0.28)	1.56 (0.15)	36 1/2" (927)	5.77 (0.54)
1646	1.85 (0.17)	14" (356)	19 1/16" (484)	3.52 (0.33)	1.85 (0.17)	30 1/2" (775)	6.50 (0.60)
1650	2.05 (0.19)	14" (356)	21 1/16" (534)	3.99 (0.37)	2.05 (0.19)	24 1/2" (622)	7.23 (0.67)
1656	2.24 (0.21)	14" (356)	23 1/16" (585)	4.46 (0.41)	2.24 (0.21)	18 1/2" (470)	7.96 (0.74)
1660	2.53 (0.24)	14" (356)	26 1/16" (661)	4.93 (0.46)	2.53 (0.24)	12 1/2" (318)	8.69 (0.81)
1666	2.73 (0.25)	14" (356)	28 1/16" (712)	5.40 (0.50)	2.73 (0.25)	6 1/2" (165)	9.42 (0.88)
2026	1.26 (0.12)	20" (508)	9 1/16" (230)	2.53 (0.24)	1.26 (0.12)	54 1/2" (1384)	4.81 (0.45)
2030	1.53 (0.14)	20" (508)	11 1/16" (280)	3.25 (0.30)	1.53 (0.14)	48 1/2" (1232)	5.79 (0.54)
2036	1.95 (0.18)	20" (508)	14 1/16" (357)	3.96 (0.37)	1.95 (0.18)	42 1/2" (1080)	6.77 (0.63)
2040	2.23 (0.21)	20" (508)	16 1/16" (407)	4.68 (0.44)	2.23 (0.21)	36 1/2" (927)	7.75 (0.72)
2046	2.64 (0.25)	20" (508)	19 1/16" (484)	5.40 (0.50)	2.64 (0.25)	30 1/2" (775)	8.73 (0.81)
2050	2.92 (0.27)	20" (508)	21 1/16" (534)	6.12 (0.57)	2.92 (0.27)	24 1/2" (622)	9.71 (0.90)
2056	3.20 (0.30)	20" (508)	23 1/16" (585)	6.84 (0.64)	3.20 (0.30)	18 1/2" (470)	10.69 (0.99)
2060	3.62 (0.34)	20" (508)	26 1/16" (661)	7.56 (0.70)	3.62 (0.34)	12 1/2" (318)	11.67 (1.08)
2066	3.89 (0.36)	20" (508)	28 1/16" (712)	8.28 (0.77)	3.89 (0.36)	6 1/2" (165)	12.65 (1.18)
2626	1.63 (0.15)	26" (660)	9 1/16" (230)	3.41 (0.32)	1.63 (0.15)	54 1/2" (1384)	6.04 (0.56)
2630	1.99 (0.19)	26" (660)	11 1/16" (280)	4.37 (0.41)	1.99 (0.19)	48 1/2" (1232)	7.27 (0.68)
2636	2.54 (0.24)	26" (660)	14 1/16" (357)	5.34 (0.50)	2.54 (0.24)	42 1/2" (1080)	8.50 (0.79)
2640	2.90 (0.27)	26" (660)	16 1/16" (407)	6.31 (0.59)	2.90 (0.27)	36 1/2" (927)	9.73 (0.90)
2646	3.44 (0.32)	26" (660)	19 1/16" (484)	7.28 (0.68)	3.44 (0.32)	30 1/2" (775)	10.96 (1.02)
2650	3.80 (0.35)	26" (660)	21 1/16" (534)	8.25 (0.77)	3.80 (0.35)	24 1/2" (622)	12.19 (1.13)
2656	4.16 (0.39)	26" (660)	23 1/16" (585)	9.22 (0.86)	4.16 (0.39)	18 1/2" (470)	13.42 (1.25)
2660	4.70 (0.44)	26" (660)	26 1/16" (661)	10.19 (0.95)	4.70 (0.44)	12 1/2" (318)	14.65 (1.36)
2666	5.06 (0.47)	26" (660)	28 1/16" (712)	11.16 (1.04)	5.06 (0.47)	6 1/2" (165)	15.88 (1.48)
3026	2.01 (0.19)	32" (813)	9 1/16" (230)	4.28 (0.40)	2.01 (0.19)	54 1/2" (1384)	7.27 (0.68)
3030	2.45 (0.23)	32" (813)	11 1/16" (280)	5.50 (0.51)	2.45 (0.23)	48 1/2" (1232)	8.75 (0.81)
3036	3.12 (0.29)	32" (813)	14 1/16" (357)	6.72 (0.62)	3.12 (0.29)	42 1/2" (1080)	10.23 (0.95)
3040	3.56 (0.33)	32" (813)	16 1/16" (407)	7.94 (0.74)	3.56 (0.33)	36 1/2" (927)	11.71 (1.09)
3046	4.23 (0.39)	32" (813)	19 1/16" (484)	9.16 (0.85)	4.23 (0.39)	30 1/2" (775)	13.19 (1.23)
3050	4.68 (0.43)	32" (813)	21 1/16" (534)	10.38 (0.96)	4.68 (0.43)	24 1/2" (622)	14.67 (1.36)
3056	5.12 (0.48)	32" (813)	23 1/16" (585)	11.60 (1.08)	5.12 (0.48)	18 1/2" (470)	16.15 (1.50)
3060 ◊	5.79 (0.54)	32" (813)	26 1/16" (661)	12.82 (1.19)	5.79 (0.54)	12 1/2" (318)	17.63 (1.64)
3066 ◊	6.23 (0.58)	32" (813)	28 1/16" (712)	14.03 (1.30)	6.23 (0.58)	6 1/2" (165)	19.11 (1.78)
3626	2.39 (0.22)	38" (965)	9 1/16" (230)	5.16 (0.48)	2.39 (0.22)	54 1/2" (1384)	8.50 (0.79)
3630	2.91 (0.27)	38" (965)	11 1/16" (280)	6.63 (0.62)	2.91 (0.27)	48 1/2" (1232)	10.23 (0.95)
3636	3.71 (0.34)	38" (965)	14 1/16" (357)	8.10 (0.75)	3.71 (0.34)	42 1/2" (1080)	11.96 (1.11)
3640	4.23 (0.39)	38" (965)	16 1/16" (407)	9.57 (0.89)	4.23 (0.39)	36 1/2" (927)	13.69 (1.27)
3646	5.02 (0.47)	38" (965)	19 1/16" (484)	11.04 (1.03)	5.02 (0.47)	30 1/2" (775)	15.42 (1.43)
3650	5.55 (0.52)	38" (965)	21 1/16" (534)	12.51 (1.16)	5.55 (0.52)	24 1/2" (622)	17.15 (1.59)
3656	6.08 (0.57)	38" (965)	23 1/16" (585)	13.98 (1.30)	6.08 (0.57)	18 1/2" (470)	18.88 (1.75)
3660 ◊	6.87 (0.64)	38" (965)	26 1/16" (661)	15.44 (1.44)	6.87 (0.64)	12 1/2" (318)	20.61 (1.91)
3666 ◊	7.40 (0.69)	38" (965)	28 1/16" (712)	16.91 (1.57)	7.40 (0.69)	6 1/2" (165)	22.34 (2.08)
4026	2.76 (0.26)	44" (1118)	9 1/16" (230)	6.04 (0.56)	2.76 (0.26)	54 1/2" (1384)	9.73 (0.90)
4030	3.37 (0.31)	44" (1118)	11 1/16" (280)	7.76 (0.72)	3.37 (0.31)	48 1/2" (1232)	11.71 (1.09)
4036	4.29 (0.40)	44" (1118)	14 1/16" (357)	9.48 (0.88)	4.29 (0.40)	42 1/2" (1080)	13.69 (1.27)
4040	4.90 (0.46)	44" (1118)	16 1/16" (407)	11.20 (1.04)	4.90 (0.46)	36 1/2" (927)	15.67 (1.46)
4046	5.82 (0.54)	44" (1118)	19 1/16" (484)	12.92 (1.20)	5.82 (0.54)	30 1/2" (775)	17.65 (1.64)
4050	6.43 (0.60)	44" (1118)	21 1/16" (534)	14.64 (1.36)	6.43 (0.60)	24 1/2" (622)	19.63 (1.82)
4056	7.04 (0.65)	44" (1118)	23 1/16" (585)	16.35 (1.52)	7.04 (0.65)	18 1/2" (470)	21.61 (2.01)
4060 ◊	7.96 (0.74)	44" (1118)	26 1/16" (661)	18.07 (1.68)	7.96 (0.74)	12 1/2" (318)	23.59 (2.19)
4066 ◊	8.57 (0.80)	44" (1118)	28 1/16" (712)	19.79 (1.84)	8.57 (0.80)	6 1/2" (165)	25.56 (2.38)

• Top of Subfloor to Top of Inside Sill Stop is calculated based upon a structural header height of 6'-10 1/2" (2096).
• Dimensions in parentheses are in millimeters or square meters.
◊ Meets or exceeds clear opening area of 5.7 sq. ft. or 0.53 m², clear opening width of 20" (508) and clear opening height of 24" (610).

Table of Picture Window With Flanking 20-Wide Single-Hungs Sizes

Scale 1/8" (3) = 1'-0" (305) — 1:96

Window Dimension	6'-11 1/2" (2121)	7'-5 1/2" (2273)	7'-11 1/2" (2426)	8'-5 1/2" (2578)	8'-11 1/2" (2731)
Minimum Rough Opening	7'-0" (2134)	7'-6" (2286)	8'-0" (2438)	8'-6" (2591)	9'-0" (2743)
Unobstructed Glass (center sash only)	29 1/4" (743)	35 1/4" (895)	41 1/4" (1048)	47 1/4" (1200)	53 1/4" (1353)

11 1/2" (292) 1'-0" (305) 5 1/4" (133)	20-3010-20	20-3610-20	20-4010-20	20-4610-20	20-5010-20
1'-5 1/2" (445) 1'-6" (457) 11 1/4" (286)	20-3016-20	20-3616-20	20-4016-20	20-4616-20	20-5016-20
1'-11 1/2" (597) 2'-0" (610) 17 1/4" (438)	20-3020-20	20-3620-20	20-4020-20	20-4620-20	20-5020-20
3'-11 1/2" (1207) 4'-0" (1219) 41 1/4" (1048)	20-3040-20	20-3640-20	20-4040-20	20-4640-20	20-5040-20
4'-5 1/2" (1359) 4'-6" (1372) 47 1/4" (1200)	20-3046-20	20-3646-20	20-4046-20	20-4646-20	20-5046-20
4'-11 1/2" (1511) 5'-0" (1524) 53 1/4" (1353)	20-3050-20	20-3650-20	20-4050-20	20-4650-20	20-5050-20
5'-5 1/2" (1664) 5'-6" (1676) 59 1/4" (1505)	20-3056-20	20-3656-20	20-4056-20	20-4656-20	20-5056-20
5'-11 1/2" (1816) 6'-0" (1829) 65 1/4" (1657)	20-3060-20	20-3660-20	20-4060-20	20-4660-20	20-5060-20

Windows have one continuous outer frame.

Unobstructed glass width dimension of flanking sash is 17 1/4" (438).

For unobstructed glass height dimensions of flanking single-hungs, see page 34.

Matching transom windows are also shown. See Picture, Transom & Specialty Windows section starting on page 68 for more information.

Grille patterns shown on page 49. Details shown on pages 52-54.

• Window Dimension always refers to outside frame-to-frame dimension.
• **Minimum Rough Opening dimensions may need to be increased to allow for use of building wraps, flashing, sill panning, brackets, fasteners or other items. See page 121 for more details.**
• Dimensions in parentheses are in millimeters.

Notes on previous page also apply to this page.

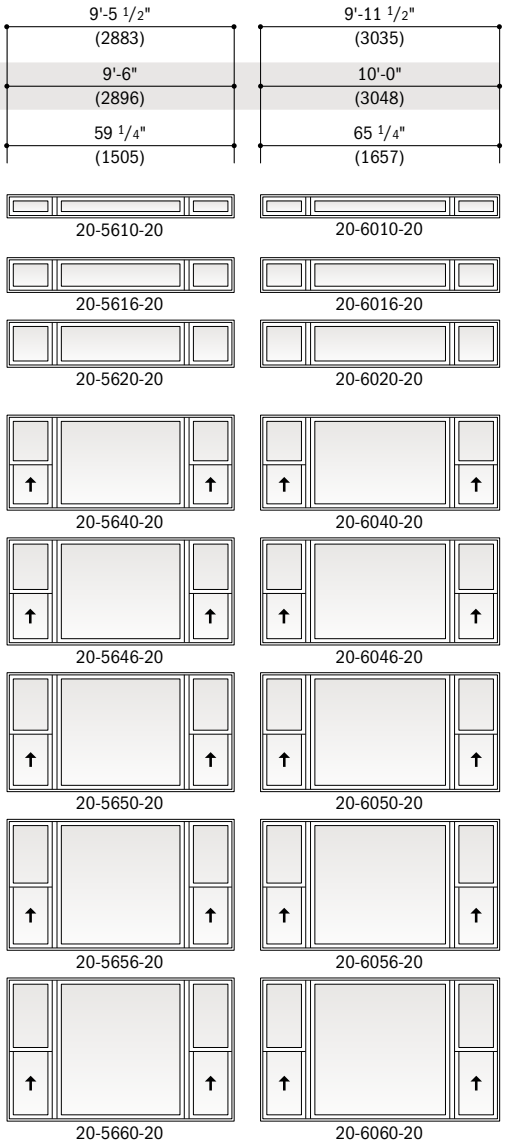

Twin Single-Hung Window Opening and Area Specifications

Window Number	Clear Opening Area Sq. Ft./(m²)		Clear Opening in Full Open Position: Width Inches/(mm)		Clear Opening in Full Open Position: Height Inches/(mm)		Glass Area Sq. Ft./(m²)		Vent Area Sq. Ft./(m²)		Top of Subfloor to Top of Inside Sill Stop Inches/(mm)		Overall Window Area Sq. Ft./(m²)	
1620-2	0.78	(0.07)	14"	(356)	8 1/16"	(204)	2.36	(0.22)	1.56	(0.15)	60 1/2"	(1537)	5.79	(0.54)
1626-2	1.07	(0.10)	14"	(356)	11 1/16"	(280)	3.30	(0.31)	2.15	(0.20)	54 1/2"	(1384)	7.27	(0.68)
1630-2	1.37	(0.13)	14"	(356)	14 1/16"	(357)	4.23	(0.39)	2.73	(0.25)	48 1/2"	(1232)	8.75	(0.81)
1636-2	1.66	(0.15)	14"	(356)	17 1/16"	(433)	5.17	(0.48)	3.31	(0.31)	42 1/2"	(1080)	10.23	(0.95)
1640-2	1.95	(0.18)	14"	(356)	20 1/16"	(509)	6.11	(0.57)	3.90	(0.36)	36 1/2"	(927)	11.71	(1.09)
1646-2	2.24	(0.21)	14"	(356)	23 1/16"	(585)	7.05	(0.66)	4.48	(0.42)	30 1/2"	(775)	13.19	(1.23)
1650-2	2.53	(0.24)	14"	(356)	26 1/16"	(661)	7.98	(0.74)	5.06	(0.47)	24 1/2"	(622)	14.67	(1.36)
1656-2	2.82	(0.26)	14"	(356)	29 1/16"	(738)	8.92	(0.83)	5.65	(0.53)	18 1/2"	(470)	16.15	(1.50)
1660-2	3.12	(0.29)	14"	(356)	32 1/16"	(814)	9.86	(0.92)	6.23	(0.58)	12 1/2"	(318)	17.63	(1.64)
2020-2	1.12	(0.10)	20"	(508)	8 1/16"	(204)	3.62	(0.34)	2.23	(0.21)	60 1/2"	(1537)	7.75	(0.72)
2026-2	1.53	(0.14)	20"	(508)	11 1/16"	(280)	5.05	(0.47)	3.07	(0.29)	54 1/2"	(1384)	9.73	(0.90)
2030-2	1.95	(0.18)	20"	(508)	14 1/16"	(357)	6.49	(0.60)	3.90	(0.36)	48 1/2"	(1232)	11.71	(1.09)
2036-2	2.37	(0.22)	20"	(508)	17 1/16"	(433)	7.93	(0.74)	4.73	(0.44)	42 1/2"	(1080)	13.69	(1.27)
2040-2	2.78	(0.26)	20"	(508)	20 1/16"	(509)	9.37	(0.87)	5.57	(0.52)	36 1/2"	(927)	15.67	(1.46)
2046-2	3.20	(0.30)	20"	(508)	23 1/16"	(585)	10.80	(1.00)	6.40	(0.60)	30 1/2"	(775)	17.65	(1.64)
2050-2	3.62	(0.34)	20"	(508)	26 1/16"	(661)	12.24	(1.14)	7.23	(0.67)	24 1/2"	(622)	19.63	(1.82)
2056-2	4.03	(0.38)	20"	(508)	29 1/16"	(738)	13.68	(1.27)	8.07	(0.75)	18 1/2"	(470)	21.61	(2.01)
2060-2	4.45	(0.41)	20"	(508)	32 1/16"	(814)	15.12	(1.40)	8.90	(0.83)	12 1/2"	(318)	23.59	(2.19)
2620-2	1.45	(0.14)	26"	(660)	8 1/16"	(204)	4.87	(0.45)	2.90	(0.27)	60 1/2"	(1537)	9.71	(0.90)
2626-2	1.99	(0.19)	26"	(660)	11 1/16"	(280)	6.81	(0.63)	3.99	(0.37)	54 1/2"	(1384)	12.19	(1.13)
2630-2	2.54	(0.24)	26"	(660)	14 1/16"	(357)	8.75	(0.81)	5.07	(0.47)	48 1/2"	(1232)	14.67	(1.36)
2636-2	3.08	(0.29)	26"	(660)	17 1/16"	(433)	10.69	(0.99)	6.15	(0.57)	42 1/2"	(1080)	17.15	(1.59)
2640-2	3.62	(0.34)	26"	(660)	20 1/16"	(509)	12.62	(1.17)	7.24	(0.67)	36 1/2"	(927)	19.63	(1.82)
2646-2	4.16	(0.39)	26"	(660)	23 1/16"	(585)	14.56	(1.35)	8.32	(0.77)	30 1/2"	(775)	22.11	(2.05)
2650-2	4.70	(0.44)	26"	(660)	26 1/16"	(661)	16.50	(1.53)	9.40	(0.87)	24 1/2"	(622)	24.59	(2.28)
2656-2	5.24	(0.49)	26"	(660)	29 1/16"	(738)	18.44	(1.71)	10.49	(0.97)	18 1/2"	(470)	27.06	(2.51)
2660-2 ◊	5.79	(0.54)	26"	(660)	32 1/16"	(814)	20.37	(1.89)	11.57	(1.08)	12 1/2"	(318)	29.54	(2.75)
3020-2	1.79	(0.17)	32"	(813)	8 1/16"	(204)	6.13	(0.57)	3.57	(0.33)	60 1/2"	(1537)	11.67	(1.08)
3026-2	2.45	(0.23)	32"	(813)	11 1/16"	(280)	8.57	(0.80)	4.91	(0.46)	54 1/2"	(1384)	14.65	(1.36)
3030-2	3.12	(0.29)	32"	(813)	14 1/16"	(357)	11.01	(1.02)	6.24	(0.58)	48 1/2"	(1232)	17.63	(1.64)
3036-2	3.79	(0.35)	32"	(813)	17 1/16"	(433)	13.44	(1.25)	7.57	(0.70)	42 1/2"	(1080)	20.61	(1.91)
3040-2	4.45	(0.41)	32"	(813)	20 1/16"	(509)	15.88	(1.48)	8.91	(0.83)	36 1/2"	(927)	23.59	(2.19)
3046-2	5.12	(0.48)	32"	(813)	23 1/16"	(585)	18.32	(1.70)	10.24	(0.95)	30 1/2"	(775)	26.56	(2.47)
3050-2 ◊	5.79	(0.54)	32"	(813)	26 1/16"	(661)	20.76	(1.93)	11.57	(1.08)	24 1/2"	(622)	29.54	(2.75)
3056-2 ◊	6.45	(0.60)	32"	(813)	29 1/16"	(738)	23.19	(2.16)	12.91	(1.20)	18 1/2"	(470)	32.52	(3.02)
3060-2 ◊	7.12	(0.66)	32"	(813)	32 1/16"	(814)	25.63	(2.38)	14.24	(1.32)	12 1/2"	(318)	35.50	(3.30)
3620-2	2.12	(0.20)	38"	(965)	8 1/16"	(204)	7.39	(0.69)	4.24	(0.39)	60 1/2"	(1537)	13.63	(1.27)
3626-2	2.91	(0.27)	38"	(965)	11 1/16"	(280)	10.33	(0.96)	5.83	(0.54)	54 1/2"	(1384)	17.11	(1.59)
3630-2	3.71	(0.34)	38"	(965)	14 1/16"	(357)	13.26	(1.23)	7.41	(0.69)	48 1/2"	(1232)	20.59	(1.91)
3636-2	4.50	(0.42)	38"	(965)	17 1/16"	(433)	16.20	(1.51)	8.99	(0.84)	42 1/2"	(1080)	24.06	(2.24)
3640-2	5.29	(0.49)	38"	(965)	20 1/16"	(509)	19.14	(1.78)	10.58	(0.98)	36 1/2"	(927)	27.54	(2.56)
3646-2	6.08	(0.57)	38"	(965)	23 1/16"	(585)	22.08	(2.05)	12.16	(1.13)	30 1/2"	(775)	31.02	(2.88)
3650-2 ◊	6.87	(0.64)	38"	(965)	26 1/16"	(661)	25.01	(2.32)	13.74	(1.28)	24 1/2"	(622)	34.50	(3.21)
3656-2 ◊	7.66	(0.71)	38"	(965)	29 1/16"	(738)	27.95	(2.60)	15.33	(1.42)	18 1/2"	(470)	37.98	(3.53)
3660-2 ◊	8.46	(0.79)	38"	(965)	32 1/16"	(814)	30.89	(2.87)	16.91	(1.57)	12 1/2"	(318)	41.46	(3.85)
4020-2	2.46	(0.23)	44"	(1118)	8 1/16"	(204)	8.65	(0.80)	4.91	(0.46)	60 1/2"	(1537)	15.59	(1.45)
4026-2	3.37	(0.31)	44"	(1118)	11 1/16"	(280)	12.08	(1.12)	6.75	(0.63)	54 1/2"	(1384)	19.56	(1.82)
4030-2	4.29	(0.40)	44"	(1118)	14 1/16"	(357)	15.52	(1.44)	8.58	(0.80)	48 1/2"	(1232)	23.54	(2.19)
4036-2	5.21	(0.48)	44"	(1118)	17 1/16"	(433)	18.96	(1.76)	10.41	(0.97)	42 1/2"	(1080)	27.52	(2.56)
4040-2	6.12	(0.57)	44"	(1118)	20 1/16"	(509)	22.40	(2.08)	12.25	(1.14)	36 1/2"	(927)	31.50	(2.93)
4046-2	7.04	(0.65)	44"	(1118)	23 1/16"	(585)	25.83	(2.40)	14.08	(1.31)	30 1/2"	(775)	35.48	(3.30)
4050-2 ◊	7.96	(0.74)	44"	(1118)	26 1/16"	(661)	29.27	(2.72)	15.91	(1.48)	24 1/2"	(622)	39.46	(3.67)
4056-2 ◊	8.87	(0.82)	44"	(1118)	29 1/16"	(738)	32.71	(3.04)	17.75	(1.65)	18 1/2"	(470)	43.44	(4.04)
4060-2 ◊	9.79	(0.91)	44"	(1118)	32 1/16"	(814)	36.15	(3.36)	19.58	(1.82)	12 1/2"	(318)	47.42	(4.41)

• Top of Subfloor to Top of Inside Sill Stop is calculated based upon a structural header height of 6'-10 1/2" (2096).
• Dimensions in parentheses are in millimeters or square meters.
◊ Meets or exceeds clear opening area of 5.7 sq. ft. or 0.53 m², clear opening width of 20" (508) and clear opening height of 24" (610).

Table of Picture Window With Flanking 26-Wide Single-Hungs Sizes

Scale 1/8" (3) = 1'-0" (305) — 1:96

Window Dimension	7'-11 1/2" (2426)	8'-5 1/2" (2578)	8'-11 1/2" (2731)	9'-5 1/2" (2883)	9'-11 1/2" (3035)
Minimum Rough Opening	8'-0" (2438)	8'-6" (2591)	9'-0" (2743)	9'-6" (2896)	10'-0" (3048)
Unobstructed Glass (center sash only)	29 1/4" (743)	35 1/4" (895)	41 1/4" (1048)	47 1/4" (1200)	53 1/4" (1353)

11 1/2" (292) 1'-0" (305) 5 1/4" (133)	26-3010-26	26-3610-26	26-4010-26	26-4610-26	26-5010-26
1'-5 1/2" (445) 1'-6" (457) 11 1/4" (286)	26-3016-26	26-3616-26	26-4016-26	26-4616-26	26-5016-26
1'-11 1/2" (597) 2'-0" (610) 17 1/4" (438)	26-3020-26	26-3620-26	26-4020-26	26-4620-26	26-5020-26
3'-11 1/2" (1207) 4'-0" (1219) 41 1/4" (1048)	26-3040-26	26-3640-26	26-4040-26	26-4640-26	26-5040-26
4'-5 1/2" (1359) 4'-6" (1372) 47 1/4" (1200)	26-3046-26	26-3646-26	26-4046-26	26-4646-26	26-5046-26
4'-11 1/2" (1511) 5'-0" (1524) 53 1/4" (1353)	26-3050-26	26-3650-26	26-4050-26	26-4650-26	26-5050-26
5'-5 1/2" (1664) 5'-6" (1676) 59 1/4" (1505)	26-3056-26	26-3656-26	26-4056-26	26-4656-26	26-5056-26
5'-11 1/2" (1816) 6'-0" (1829) 65 1/4" (1657)	26-3060-26◊	26-3660-26◊	26-4060-26◊	26-4660-26◊	26-5060-26◊

Windows have one continuous outer frame.

Unobstructed glass width dimension of flanking sash is 23 1/4" (591).

For unobstructed glass height dimensions of flanking single-hungs, see page 34.

Matching transom windows are also shown. See Picture, Transom & Specialty Windows section starting on page 68 for more information.

Grille patterns shown on page 49. Details shown on pages 52-54.

• Window Dimension always refers to outside frame-to-frame dimension.
• **Minimum Rough Opening dimensions may need to be increased to allow for use of building wraps, flashing, sill panning, brackets, fasteners or other items. See page 121 for more details.**
• Dimensions in parentheses are in millimeters.
◊ Meets or exceeds clear opening area of 5.7 sq. ft. or 0.53 m², clear opening width of 20" (508) and clear opening height of 24" (610).

Notes on previous page also apply to this page.

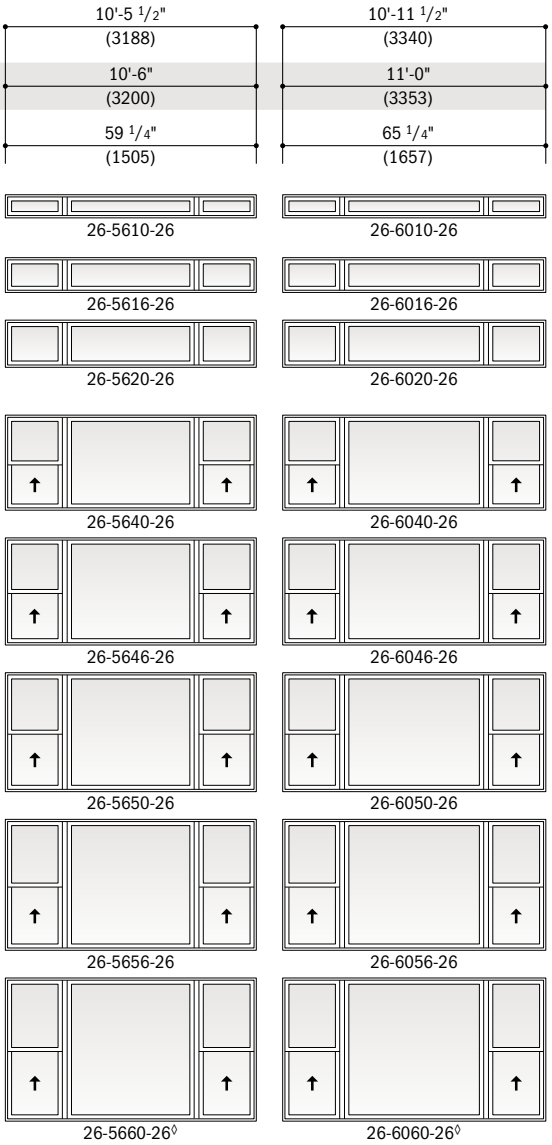

Triple Single-Hung Window Opening and Area Specifications

Window Number	Clear Opening Area Sq. Ft./(m²)	Clear Opening in Full Open Position: Width Inches/(mm)	Clear Opening in Full Open Position: Height Inches/(mm)	Glass Area Sq. Ft./(m²)	Vent Area Sq. Ft./(m²)	Top of Subfloor to Top of Inside Sill Stop Inches/(mm)	Overall Window Area Sq. Ft./(m²)
1620-3	0.78 (0.07)	14" (356)	8 1/16" (204)	3.54 (0.33)	2.35 (0.22)	60 1/2" (1537)	8.73 (0.81)
1626-3	1.07 (0.10)	14" (356)	11 1/16" (280)	4.94 (0.46)	3.22 (0.30)	54 1/2" (1384)	10.96 (1.02)
1630-3	1.37 (0.13)	14" (356)	14 1/16" (357)	6.35 (0.59)	4.10 (0.38)	48 1/2" (1232)	13.19 (1.23)
1636-3	1.66 (0.15)	14" (356)	17 1/16" (433)	7.76 (0.72)	4.97 (0.46)	42 1/2" (1080)	15.42 (1.43)
1640-3	1.95 (0.18)	14" (356)	20 1/16" (509)	9.16 (0.85)	5.85 (0.54)	36 1/2" (927)	17.65 (1.64)
1646-3	2.24 (0.21)	14" (356)	23 1/16" (585)	10.57 (0.98)	6.72 (0.62)	30 1/2" (775)	19.88 (1.85)
1650-3	2.53 (0.24)	14" (356)	26 1/16" (661)	11.97 (1.11)	7.60 (0.71)	24 1/2" (622)	22.11 (2.05)
1656-3	2.82 (0.26)	14" (356)	29 1/16" (738)	13.38 (1.24)	8.47 (0.79)	18 1/2" (470)	24.34 (2.26)
1660-3	3.12 (0.29)	14" (356)	32 1/16" (814)	14.79 (1.37)	9.35 (0.87)	12 1/2" (318)	26.56 (2.47)
2020-3	1.12 (0.10)	20" (508)	8 1/16" (204)	5.42 (0.50)	3.35 (0.31)	60 1/2" (1537)	11.67 (1.08)
2026-3	1.53 (0.14)	20" (508)	11 1/16" (280)	7.58 (0.70)	4.60 (0.43)	54 1/2" (1384)	14.65 (1.36)
2030-3	1.95 (0.18)	20" (508)	14 1/16" (357)	9.74 (0.90)	5.85 (0.54)	48 1/2" (1232)	17.63 (1.64)
2036-3	2.37 (0.22)	20" (508)	17 1/16" (433)	11.89 (1.11)	7.10 (0.66)	42 1/2" (1080)	20.61 (1.91)
2040-3	2.78 (0.26)	20" (508)	20 1/16" (509)	14.05 (1.31)	8.35 (0.78)	36 1/2" (927)	23.59 (2.19)
2046-3	3.20 (0.30)	20" (508)	23 1/16" (585)	16.20 (1.51)	9.60 (0.89)	30 1/2" (775)	26.56 (2.47)
2050-3	3.62 (0.34)	20" (508)	26 1/16" (661)	18.36 (1.71)	10.85 (1.01)	24 1/2" (622)	29.54 (2.75)
2056-3	4.03 (0.38)	20" (508)	29 1/16" (738)	20.52 (1.91)	12.10 (1.12)	18 1/2" (470)	32.52 (3.02)
2060-3	4.45 (0.41)	20" (508)	32 1/16" (814)	22.67 (2.11)	13.35 (1.24)	12 1/2" (318)	35.50 (3.30)
2620-3	1.45 (0.14)	26" (660)	8 1/16" (204)	7.31 (0.68)	4.35 (0.41)	60 1/2" (1537)	14.61 (1.36)
2626-3	1.99 (0.19)	26" (660)	11 1/16" (280)	10.22 (0.95)	5.98 (0.56)	54 1/2" (1384)	18.34 (1.70)
2630-3	2.54 (0.24)	26" (660)	14 1/16" (357)	13.12 (1.22)	7.60 (0.71)	48 1/2" (1232)	22.06 (2.05)
2636-3	3.08 (0.29)	26" (660)	17 1/16" (433)	16.03 (1.49)	9.23 (0.86)	42 1/2" (1080)	25.79 (2.40)
2640-3	3.62 (0.34)	26" (660)	20 1/16" (509)	18.93 (1.76)	10.85 (1.01)	36 1/2" (927)	29.52 (2.74)
2646-3	4.16 (0.39)	26" (660)	23 1/16" (585)	21.84 (2.03)	12.48 (1.16)	30 1/2" (775)	33.25 (3.09)
2650-3	4.70 (0.44)	26" (660)	26 1/16" (661)	24.75 (2.30)	14.10 (1.31)	24 1/2" (622)	36.98 (3.44)
2656-3	5.24 (0.49)	26" (660)	29 1/16" (738)	27.65 (2.57)	15.73 (1.46)	18 1/2" (470)	40.71 (3.78)
2660-3 ◊	5.79 (0.54)	26" (660)	32 1/16" (814)	30.56 (2.84)	17.35 (1.61)	12 1/2" (318)	44.44 (4.13)
3020-3	1.79 (0.17)	32" (813)	8 1/16" (204)	9.20 (0.85)	5.36 (0.50)	60 1/2" (1537)	17.54 (1.63)
3026-3	2.45 (0.23)	32" (813)	11 1/16" (280)	12.85 (1.19)	7.36 (0.68)	54 1/2" (1384)	22.02 (2.05)
3030-3	3.12 (0.29)	32" (813)	14 1/16" (357)	16.51 (1.53)	9.36 (0.87)	48 1/2" (1232)	26.50 (2.46)
3036-3	3.79 (0.35)	32" (813)	17 1/16" (433)	20.16 (1.87)	11.36 (1.06)	42 1/2" (1080)	30.98 (2.88)
3040-3	4.45 (0.41)	32" (813)	20 1/16" (509)	23.82 (2.21)	13.36 (1.24)	36 1/2" (927)	35.46 (3.29)
3046-3	5.12 (0.48)	32" (813)	23 1/16" (585)	27.48 (2.55)	15.36 (1.43)	30 1/2" (775)	39.94 (3.71)
3050-3 ◊	5.79 (0.54)	32" (813)	26 1/16" (661)	31.13 (2.89)	17.36 (1.61)	24 1/2" (622)	44.42 (4.13)
3056-3 ◊	6.45 (0.60)	32" (813)	29 1/16" (738)	34.79 (3.23)	19.36 (1.80)	18 1/2" (470)	48.90 (4.54)
3060-3 ◊	7.12 (0.66)	32" (813)	32 1/2" (814)	38.45 (3.57)	21.36 (1.98)	12 1/2" (318)	53.38 (4.96)
3620-3	2.12 (0.20)	38" (965)	8 1/16" (204)	11.08 (1.03)	6.36 (0.59)	60 1/2" (1537)	20.48 (1.90)
3626-3	2.91 (0.27)	38" (965)	11 1/16" (280)	15.49 (1.44)	8.74 (0.81)	54 1/2" (1384)	25.71 (2.39)
3630-3	3.71 (0.34)	38" (965)	14 1/16" (357)	19.89 (1.85)	11.11 (1.03)	48 1/2" (1232)	30.94 (2.87)
3636-3	4.50 (0.42)	38" (965)	17 1/16" (433)	24.30 (2.26)	13.49 (1.25)	42 1/2" (1080)	36.17 (3.36)
3640-3	5.29 (0.49)	38" (965)	20 1/16" (509)	28.71 (2.67)	15.86 (1.47)	36 1/2" (927)	41.40 (3.85)
3646-3	6.08 (0.57)	38" (965)	23 1/16" (585)	33.11 (3.08)	18.24 (1.69)	30 1/2" (775)	46.63 (4.33)
3650-3 ◊	6.87 (0.64)	38" (965)	26 1/16" (661)	37.52 (3.49)	20.61 (1.92)	24 1/2" (622)	51.86 (4.82)
3656-3 ◊	7.66 (0.71)	38" (965)	29 1/16" (738)	41.93 (3.90)	22.99 (2.14)	18 1/2" (470)	57.09 (5.30)
3660-3 ◊	8.46 (0.79)	38" (965)	32 1/16" (814)	46.33 (4.30)	25.36 (2.36)	12 1/2" (318)	62.31 (5.79)
4020-3	2.46 (0.23)	44" (1118)	8 1/16" (204)	12.97 (1.21)	7.37 (0.69)	60 1/2" (1537)	23.42 (2.18)
4026-3	3.37 (0.31)	44" (1118)	11 1/16" (280)	18.12 (1.68)	10.12 (0.94)	54 1/2" (1384)	29.40 (2.73)
4030-3	4.29 (0.40)	44" (1118)	14 1/16" (357)	23.28 (2.16)	12.87 (1.20)	48 1/2" (1232)	35.38 (3.29)
4036-3	5.21 (0.48)	44" (1118)	17 1/16" (433)	28.44 (2.64)	15.62 (1.45)	42 1/2" (1080)	41.36 (3.84)
4040-3	6.12 (0.57)	44" (1118)	20 1/16" (509)	33.59 (3.12)	18.37 (1.71)	36 1/2" (927)	47.34 (4.40)
4046-3	7.04 (0.65)	44" (1118)	23 1/16" (585)	38.75 (3.60)	21.12 (1.96)	30 1/2" (775)	53.31 (4.95)
4050-3 ◊	7.96 (0.74)	44" (1118)	26 1/16" (661)	43.91 (4.08)	23.87 (2.22)	24 1/2" (622)	59.29 (5.51)
4056-3 ◊	8.87 (0.82)	44" (1118)	29 1/16" (738)	49.06 (4.56)	26.62 (2.47)	18 1/2" (470)	65.27 (6.06)
4060-3 ◊	9.79 (0.91)	44" (1118)	32 1/16" (814)	54.22 (5.04)	29.37 (2.73)	12 1/2" (318)	71.25 (6.62)

• Top of Subfloor to Top of Inside Sill Stop is calculated based upon a structural header height of 6'-10 1/2" (2096).
• Dimensions in parentheses are in millimeters or square meters.
◊ Meets or exceeds clear opening area of 5.7 sq. ft. or 0.53 m², clear opening width of 20" (508) and clear opening height of 24" (610).

Table of Picture Window With Flanking 30-Wide Single-Hungs Sizes

Notes on next page also apply to this page.

Scale ⅛" (3) = 1'-0" (305) — 1:96

Window Dimension	8'-11 1/2" (2731)	9'-5 1/2" (2883)	9'-11 1/2" (3035)	10'-5 1/2" (3188)
Minimum Rough Opening	9'-0" (2743)	9'-6" (2896)	10'-0" (3048)	10'-6" (3200)
Unobstructed Glass (center sash only)	29 1/4" (743)	35 1/4" (895)	41 1/4" (1048)	47 1/4" (1200)

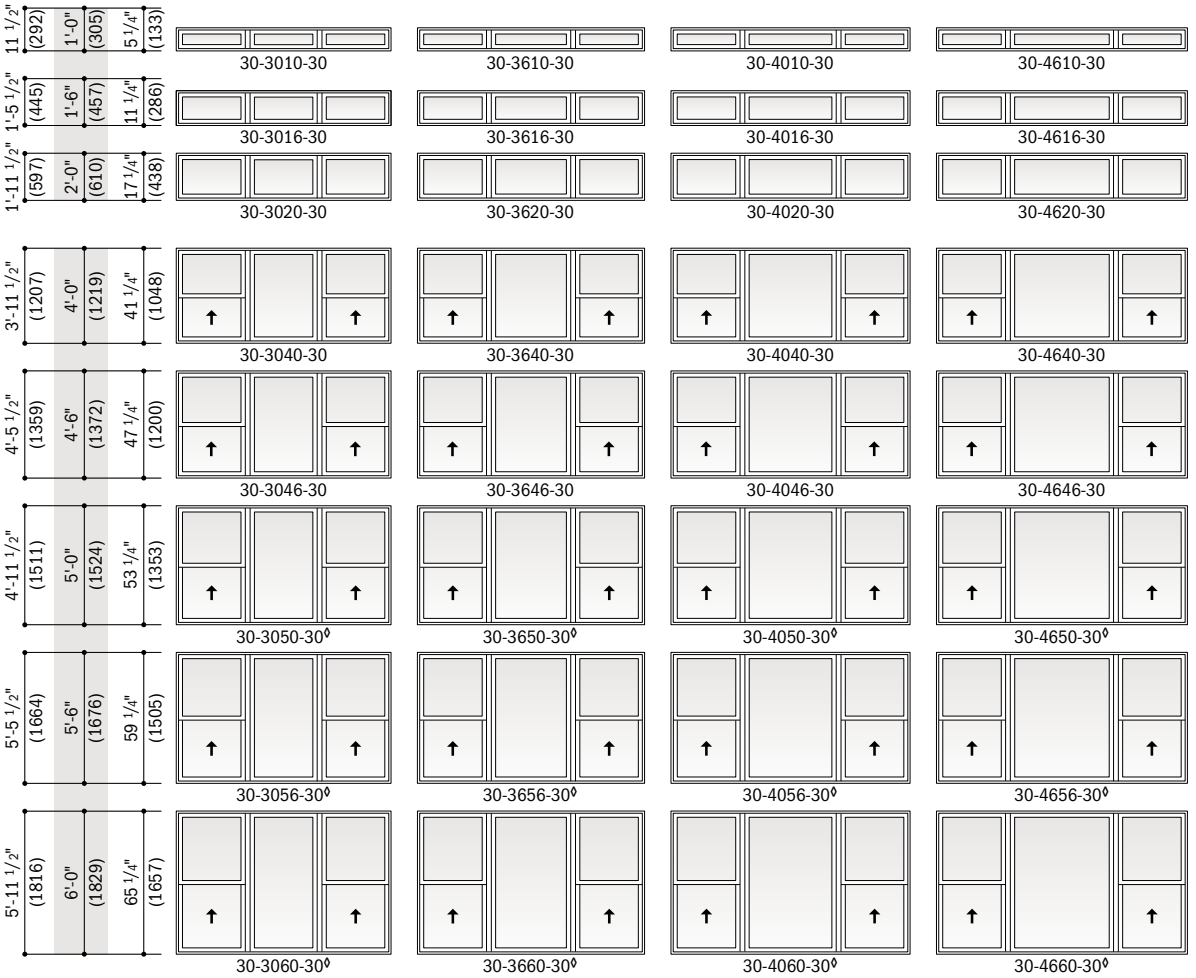

- Window Dimension always refers to outside frame-to-frame dimension.
- **Minimum Rough Opening dimensions may need to be increased to allow for use of building wraps, flashing, sill panning, brackets, fasteners or other items. See page 121 for more details.**
- Dimensions in parentheses are in millimeters.

◊ Meets or exceeds clear opening area of 5.7 sq. ft. or 0.53 m², clear opening width of 20" (508) and clear opening height of 24" (610).

10'-11 1/2" (3340)	11'-5 1/2" (3493)	11'-11 1/2" (3645)
11'-0" (3353)	11'-6" (3505)	12'-0" (3658)
53 1/4" (1353)	59 1/4" (1505)	65 1/4" (1657)

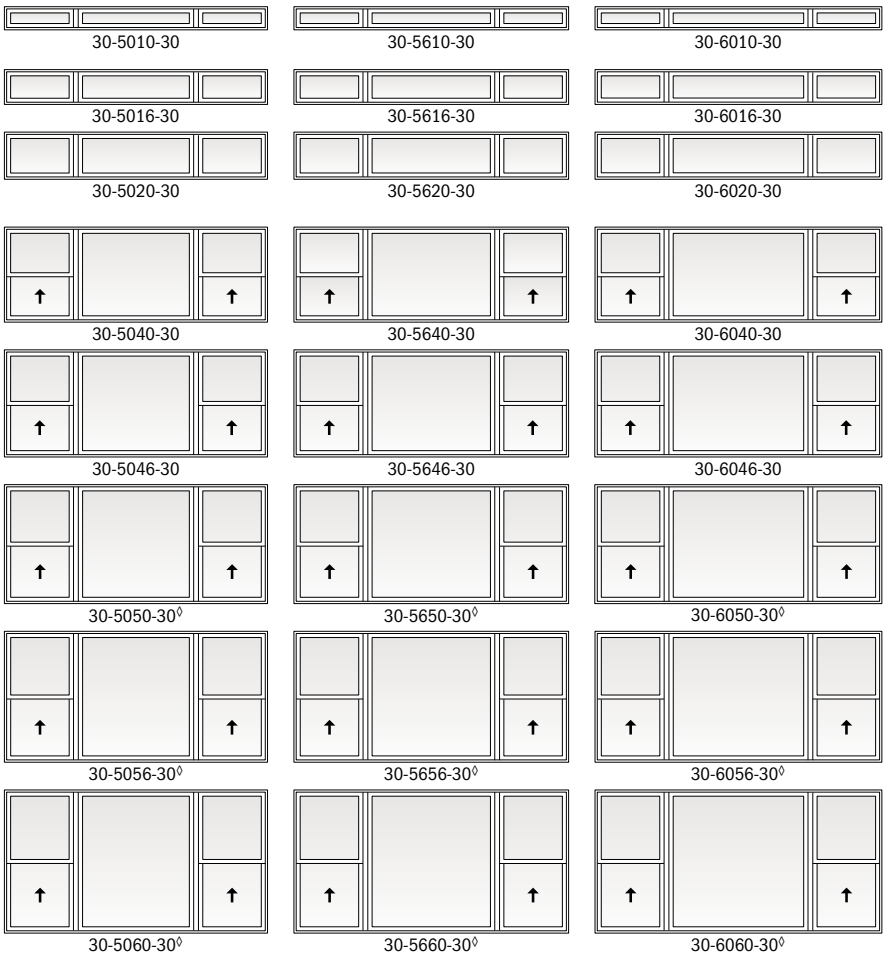

Windows have one continuous outer frame.

Unobstructed glass width dimension of flanking sash is 29 1/4" (743). For unobstructed glass height dimensions of flanking single-hungs, see page 34.

Matching transom windows are also shown. See Picture, Transom & Specialty Windows section starting on page 68 for more information.

Grille patterns shown below.
Details shown on pages 52-54.

- Window Dimension always refers to outside frame-to-frame dimension.
- **Minimum Rough Opening dimensions may need to be increased to allow for use of building wraps, flashing, sill panning, brackets, fasteners or other items. See page 121 for more details.**
- Dimensions in parentheses are in millimeters.

◊Meets or exceeds clear opening area of 5.7 sq.ft. or 0.53 m², clear opening width of 20" (508) and clear opening height of 24" (610).

Grille Patterns

	Prairie A	Colonial	Short Fractional
Single-Hung	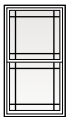	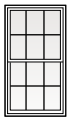	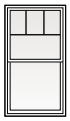

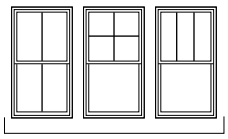

Specified Equal Light Examples

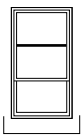

Custom Example*

Single-hung window patterns are also available in Upper Sash Only (USO) configurations. For picture window patterns that require alignment with single-hung patterns, identify the single-hung sash style (equal or reverse cottage) when ordering.

Number of lights and overall pattern varies with window size. Patterns may not be available in all configurations or sizes. Specified equal light and custom grille patterns are also available. For specified equal light, specify number of same-size rectangles across or down. For more grille options, see page 14 or visit **andersenwindows.com/grilles**.

*Grille illustration reflects a window taller than 6'-5 1/2" (1969) with a 2:1 sash ratio.
- Dimensions in parentheses are in millimeters.

Arch Single-Hung Window Details – New Construction

Scale 1 1/2" (38) = 1'-0" (305) — 1:8

1 3/8" Flange Setback

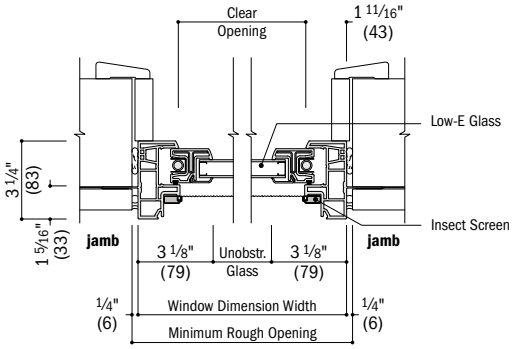

Horizontal Section
Arch Single-Hung

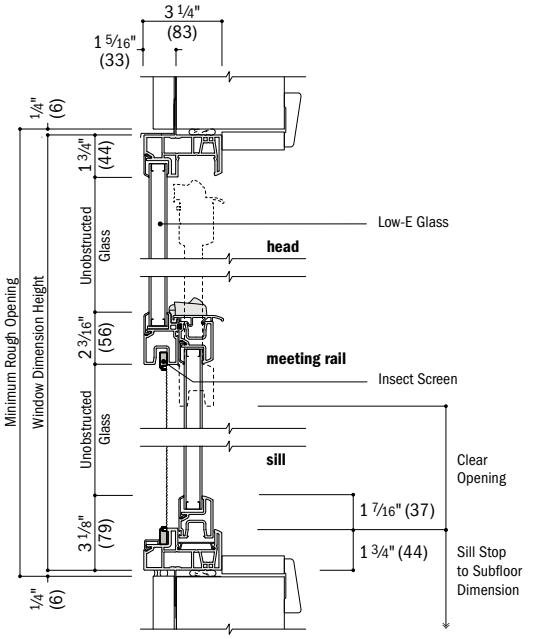

Vertical Section
Arch Single-Hung

1" Flange Setback With Stucco Key

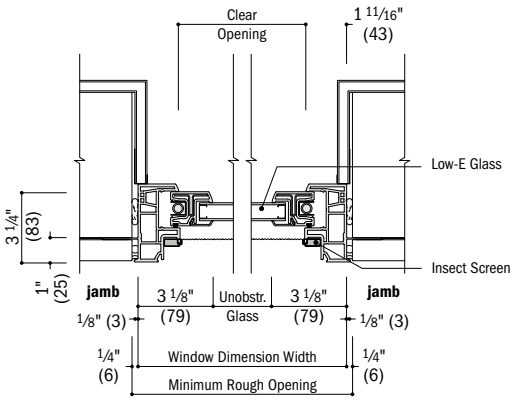

Horizontal Section
Arch Single-Hung, Stucco Exterior

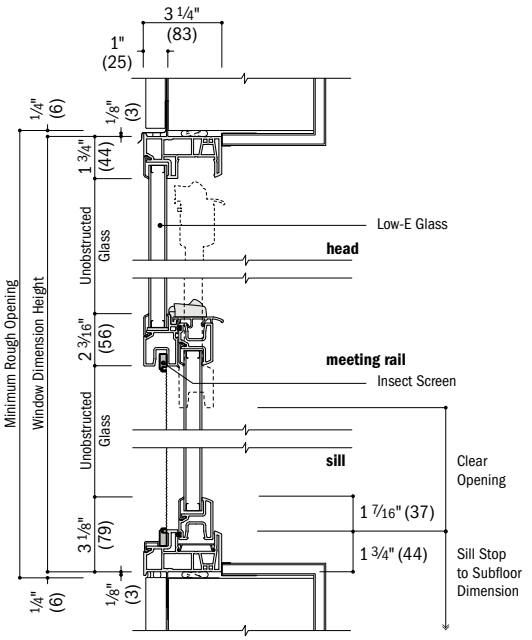

Vertical Section
Arch Single-Hung, Stucco Exterior

- Light-colored areas are parts included with window. Dark-colored areas are additional Andersen® parts required to complete window assembly as shown.
- **Minimum rough openings may need to be increased to allow for use of building wraps, flashing, sill panning, brackets, fasteners or other items. See installation information on page 121.**
- Drip cap is required to complete window installation as shown but may not be included with window. Use of drip cap is recommended for proper installation.
- Details are for illustration only and are not intended to represent product installation methods or materials. Refer to product installation instructions at andersenwindows.com.
- Dimensions in parentheses are in millimeters.

Arch Single-Hung Window Details – Replacement

Scale 1 1/2" (38) = 1'-0" (305) – 1:8

No Flange

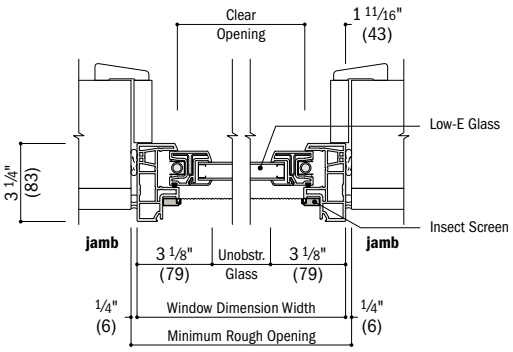

Horizontal Section
Arch Single-Hung, Existing Framed Opening

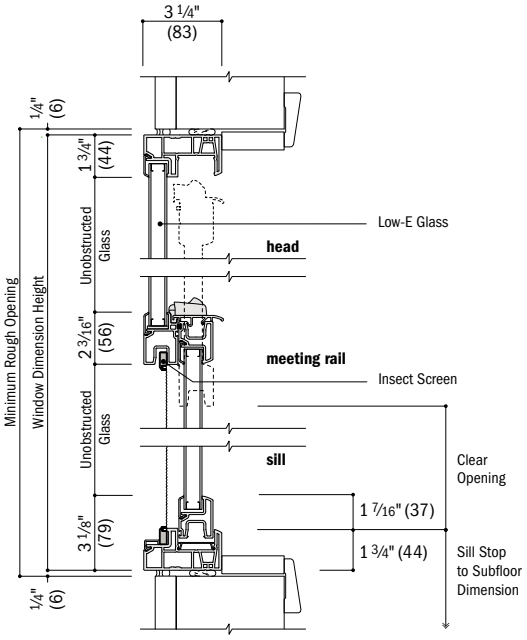

Vertical Section
Arch Single-Hung, Existing Framed Opening

Arch single-hung windows are not available with insert or flush fin frames.

- Light-colored areas are parts included with window. Dark-colored areas are additional Andersen® parts required to complete window assembly as shown.
- **Minimum rough openings may need to be increased to allow for use of building wraps, flashing, sill panning, brackets, fasteners or other items. See installation information on page 121.**
- Details are for illustration only and are not intended to represent product installation methods or materials. Refer to product installation instructions at andersenwindows.com.
- Dimensions in parentheses are in millimeters.

Single-Hung Window Details – New Construction

Scale 1 1/2" (38) = 1'-0" (305) – 1:8

1 3/8" Flange Setback

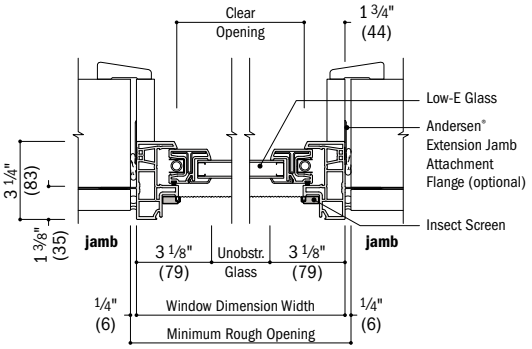

Horizontal Section

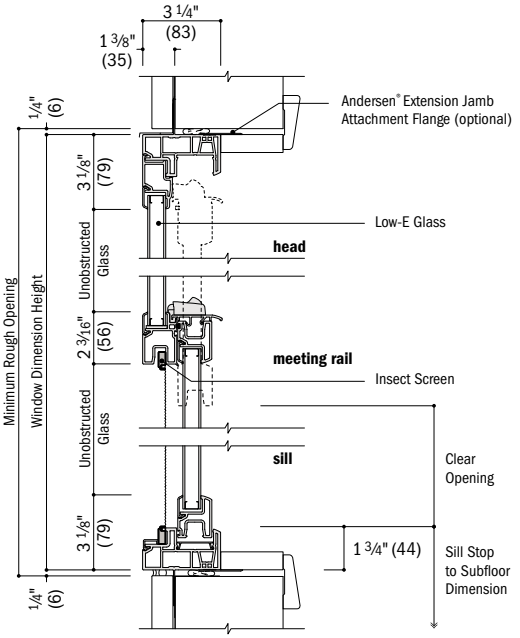

Vertical Section

1" Flange Setback With Stucco Key

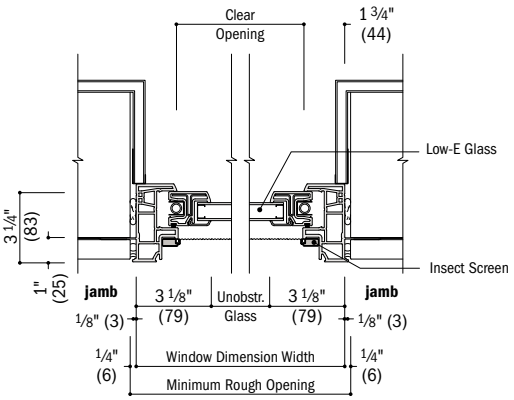

Horizontal Section
Stucco Exterior

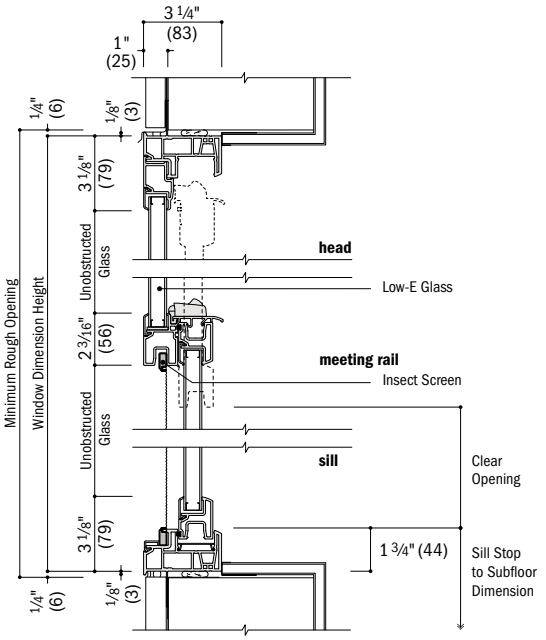

Vertical Section
Stucco Exterior

See pages 88-93 for joining details.

Integrals

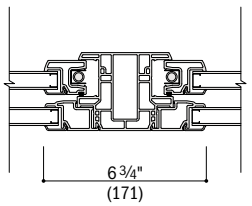

Horizontal Section
Twin or Triple Single-Hung

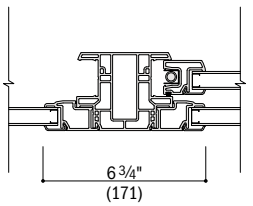

Horizontal Section
Picture With Flanking Single-Hung

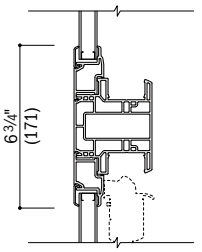

Vertical Section
Transom Over Single-Hung

- Light-colored areas are parts included with window. Dark-colored areas are additional Andersen® parts required to complete window assembly as shown.
- **Minimum rough openings may need to be increased to allow for use of building wraps, flashing, sill panning, brackets, fasteners or other items. See installation information on page 121.**
- Drip cap is required to complete window installation as shown but may not be included with window. Use of drip cap is recommended for proper installation.
- Details are for illustration only and are not intended to represent product installation methods or materials. Refer to product installation instructions at andersenwindows.com.
- Dimensions in parentheses are in millimeters.

Single-Hung Window Details – Replacement

Scale 1 1/2" (38) = 1'-0" (305) – 1:8

No Flange

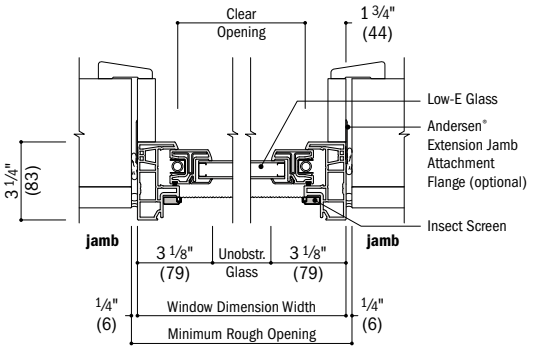

Horizontal Section
Existing Framed Opening

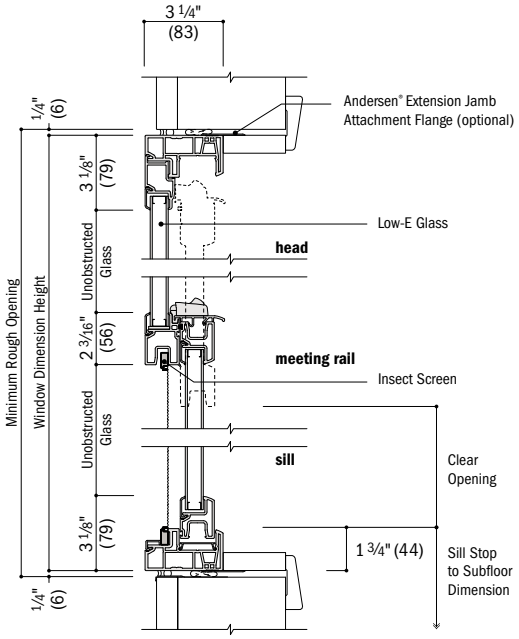

Vertical Section
Existing Framed Opening

Insert

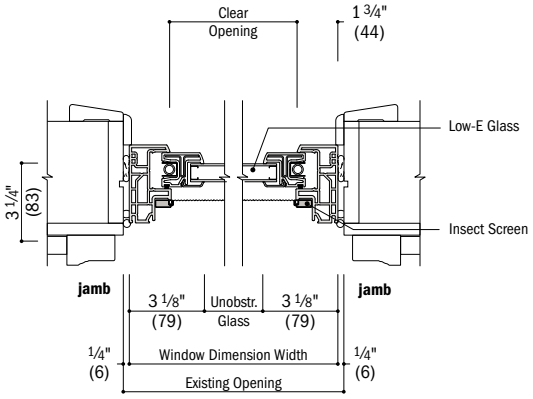

Horizontal Section
Existing Window Opening

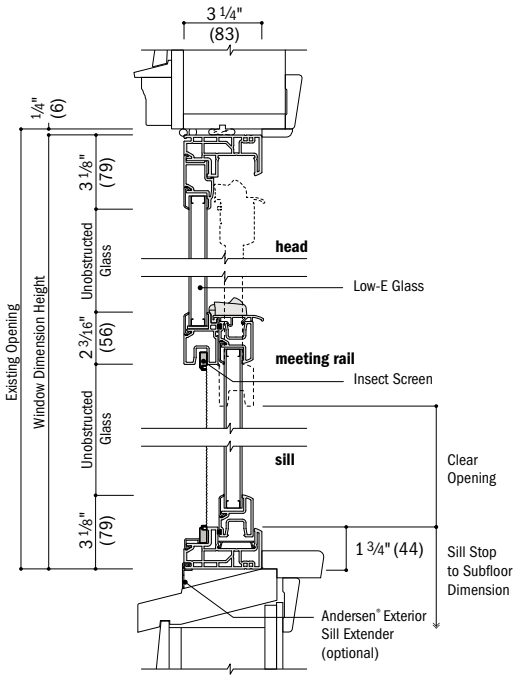

Vertical Section
Existing Window Opening

continued on next page

Integral details shown on previous page. Installation accessories are available for windows with insert frame; see page 120.

See pages 88-93 for joining details.

- Light-colored areas are parts included with window. Dark-colored areas are additional Andersen® parts required to complete window assembly as shown.
- **Minimum rough openings may need to be increased to allow for use of building wraps, flashing, sill panning, brackets, fasteners or other items. See installation information on page 121.**
- Details are for illustration only and are not intended to represent product installation methods or materials. Refer to product installation instructions at andersenwindows.com.
- Dimensions in parentheses are in millimeters.

Flush Fin*

Single-Hung Window Details – Replacement *(continued)*

Scale 1 1/2" (38) = 1'-0" (305) — 1:8

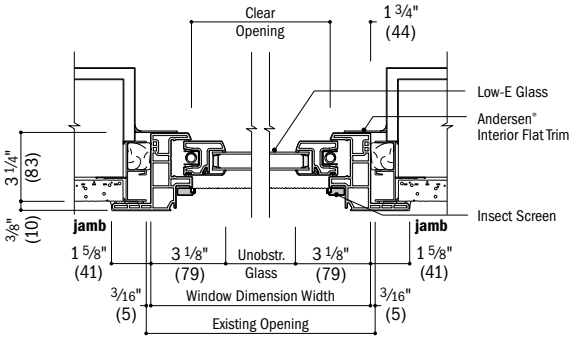

Horizontal Section
Existing Aluminum Frame Window Opening

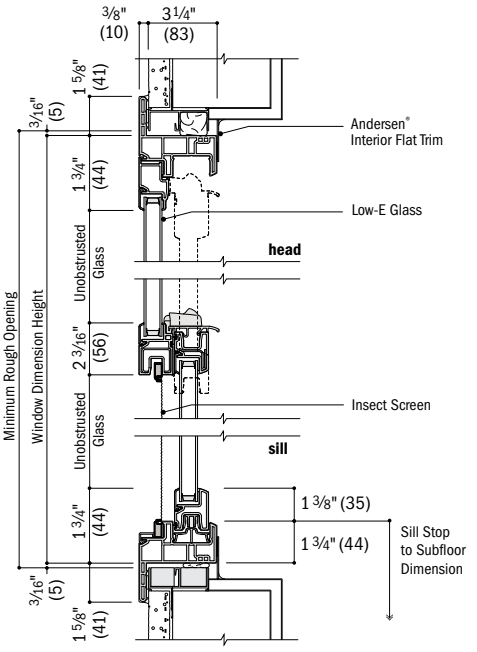

Vertical Section
Existing Aluminum Frame Window Opening

Integral details shown on page 52. Installation accessories are available for windows with flush fin frame; see page 120.

See pages 88-93 for joining details.

• Light-colored areas are parts included with window. Dark-colored areas are additional Andersen® parts required to complete window assembly as shown.
• **Minimum rough openings may need to be increased to allow for use of building wraps, flashing, sill panning, brackets, fasteners or other items. See installation information on page 121.**
• Details are for illustration only and are not intended to represent product installation methods or materials. Refer to product installation instructions at andersenwindows.com.
• Dimensions in parentheses are in millimeters.
*Windows with flush fin frame are available in select Southwestern states including Arizona, California, Nevada, New Mexico and Utah. Limited configuration availability. See your Andersen supplier for more information.

Table of Gliding Active-Stationary or Stationary-Active Window Sizes

Scale 1/8" (3) = 1'-0" (305) – 1:96

Window Dimension	1'-11 1/2" (597)	2'-5 1/2" (749)	2'-11 1/2" (902)	3'-5 1/2" (1054)	3'-11 1/2" (1207)	4'-5 1/2" (1359)	4'-11 1/2" (1511)	5'-5 1/2" (1664)	5'-11 1/2" (1816)
Minimum Rough Opening	2'-0" (610)	2'-6" (762)	3'-0" (914)	3'-6" (1067)	4'-0" (1219)	4'-6" (1372)	5'-0" (1524)	5'-6" (1676)	6'-0" (1829)
Unobstructed Glass (width of single sash)	7 9/16" (192)	10 9/16" (268)	13 9/16" (344)	16 9/16" (420)	19 9/16" (496)	22 9/16" (573)	25 9/16" (649)	28 9/16" (725)	31 9/16" (801)

CUSTOM WIDTHS – 23 1/2" to 71 1/2"

CUSTOM HEIGHTS – 11 1/2" to 71 1/2"

11 1/2" (292) 1'-0" (305) 5 1/4" (133)	2010	2610	3010	3610	4010	4610	5010	5610	6010
1'-5 1/2" (445) 1'-6" (457) 11 1/4" (286)	2016	2616	3016	3616	4016	4616	5016	5616	6016
1'-11 1/2" (597) 2'-0" (610) 17 1/4" (438)	2020	2620	3020	3620	4020	4620	5020	5620	6020
2'-5 1/2" (749) 2'-6" (762) 23 1/4" (591)	2026	2626	3026	3626	4026	4626	5026	5626	6026◊
2'-11 1/2" (902) 3'-0" (914) 29 1/4" (743)	2030	2630	3030	3630	4030	4630	5030◊	5630◊	6030◊
3'-5 1/2" (1054) 3'-6" (1067) 35 1/4" (895)	2036	2636	3036	3636	4036	4636◊	5036◊	5636◊	6036◊
3'-11 1/2" (1207) 4'-0" (1219) 41 1/4" (1048)	2040	2640	3040	3640	4040◊	4640◊	5040◊	5640◊	6040◊
4'-5 1/2" (1359) 4'-6" (1372) 47 1/4" (1200)	2046	2646	3046	3646	4046◊	4646◊	5046◊	5646◊	6046◊
4'-11 1/2" (1511) 5'-0" (1524) 53 1/4" (1353)	2050	2650	3050	3650	4050◊	4650◊	5050◊	5650◊	6050◊
5'-5 1/2" (1664) 5'-6" (1676) 59 1/4" (1505)	2056	2656	3056	3656	4056◊	4656◊	5056◊	5656◊	6056◊
5'-11 1/2" (1816) 6'-0" (1829) 65 1/4" (1657)	2060	2660	3060	3660	4060◊	4660◊	5060◊	5660◊	6060◊

Custom-size windows are available in 1/8" (3) increments. See page 97 for custom sizes and specifications.

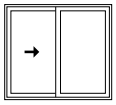

Active-Stationary

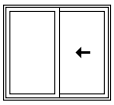

Stationary-Active

Choose active-stationary (XO) sash or stationary-active (OX) sash as viewed from the exterior. Two locks are standard on all heights greater than 4'-2" (1270). Grille patterns shown on page 65. Details shown on pages 66-67.

- Window Dimension always refers to outside frame-to-frame dimension.
- **Minimum Rough Opening dimensions may need to be increased to allow for use of building wraps, flashing, sill panning, brackets, fasteners or other items. See page 121 for more details.**
- Dimensions in parentheses are in millimeters.

◊ Meets or exceeds clear opening area of 5.7 sq. ft. or 0.53 m², clear opening width of 20" (508) and clear opening height of 24" (610). See table on pages 60-61.

Table of Gliding Active-Stationary-Active 1:2:1 Sash Ratio Window Sizes

Notes on next page also apply to this page.

Scale 1/8" (3) = 1'-0" (305) – 1:96

Window Dimension	4'-11 1/2" (1511)	5'-11 1/2" (1816)	6'-11 1/2" (2121)	7'-5 1/2" (2273)	7'-11 1/2" (2426)	8'-5 1/2" (2578)
Minimum Rough Opening	5'-0" (1524)	6'-0" (1829)	7'-0" (2134)	7'-6" (2286)	8'-0" (2438)	8'-6" (2591)
Unobstructed Glass (width of center sash)	27 7/8" (708)	33 7/8" (861)	39 7/8" (1013)	42 7/8" (1089)	45 7/8" (1165)	48 7/8" (1242)
Unobstructed Glass (width of single venting sash)	10 17/32" (267)	13 17/32" (344)	16 17/32" (420)	18 1/32" (458)	19 17/32" (496)	21 1/32" (534)

CUSTOM WIDTHS – 59 1/2" to **143 1/2"**

CUSTOM HEIGHTS – 17 1/2" to **71 1/2"**

1'-5 1/2" (445)	5016	6016	7016	7616	8016	8616
1'-11 1/2" (597)	5020	6020	7020	7620	8020	8620
2'-5 1/2" (749)	5026	6026	7026	7626	8026	8626
2'-11 1/2" (902)	5030	6030	7030	7630	8030	8630
3'-5 1/2" (1054)	5036	6036	7036	7636	8036	8636◊
3'-11 1/2" (1207)	5040	6040	7040	7640	8040◊	8640◊
4'-5 1/2" (1359)	5046	6046	7046	7646	8046◊	8646◊
4'-11 1/2" (1511)	5050	6050	7050	7650	8050◊	8650◊
5'-5 1/2" (1664)	5056	6056	7056	7656	8056◊	8656◊
5'-11 1/2" (1816)	5060	6060	7060	7660	8060◊	8660◊

1'-6" (457)	2'-0" (610)	2'-6" (762)	3'-0" (914)	3'-6" (1067)	4'-0" (1219)	4'-6" (1372)
5'-0" (1524)	6'-0" (1829)					
11 1/4" (286)	17 1/4" (438)	23 1/4" (591)	29 1/4" (743)	35 1/4" (895)	41 1/4" (1048)	47 1/4" (1200)
53 1/4" (1353)	59 1/4" (1505)	65 1/4" (1657)				

- Window Dimension always refers to outside frame-to-frame dimension.
- **Minimum Rough Opening dimensions may need to be increased to allow for use of building wraps, flashing, sill panning, brackets, fasteners or other items. See page 121 for more details.**
- Dimensions in parentheses are in millimeters.

◊ Meets or exceeds clear opening area of 5.7 sq. ft. or 0.53 m², clear opening width of 20" (508) and clear opening height of 24" (610). See table on pages 62-63.

8'-11 1/2" (2731)	9'-11 1/2" (3035)	10'-11 1/2" (3340)	11'-11 1/2" (3645)
9'-0" (2743)	10'-0" (3048)	11'-0" (3353)	12'-0" (3658)
51 7/8" (1318)	57 7/8" (1470)	63 7/8" (1623)	69 7/8" (1775)
22 17/32" (572)	25 17/32" (648)	28 17/32" (725)	31 17/32" (801)

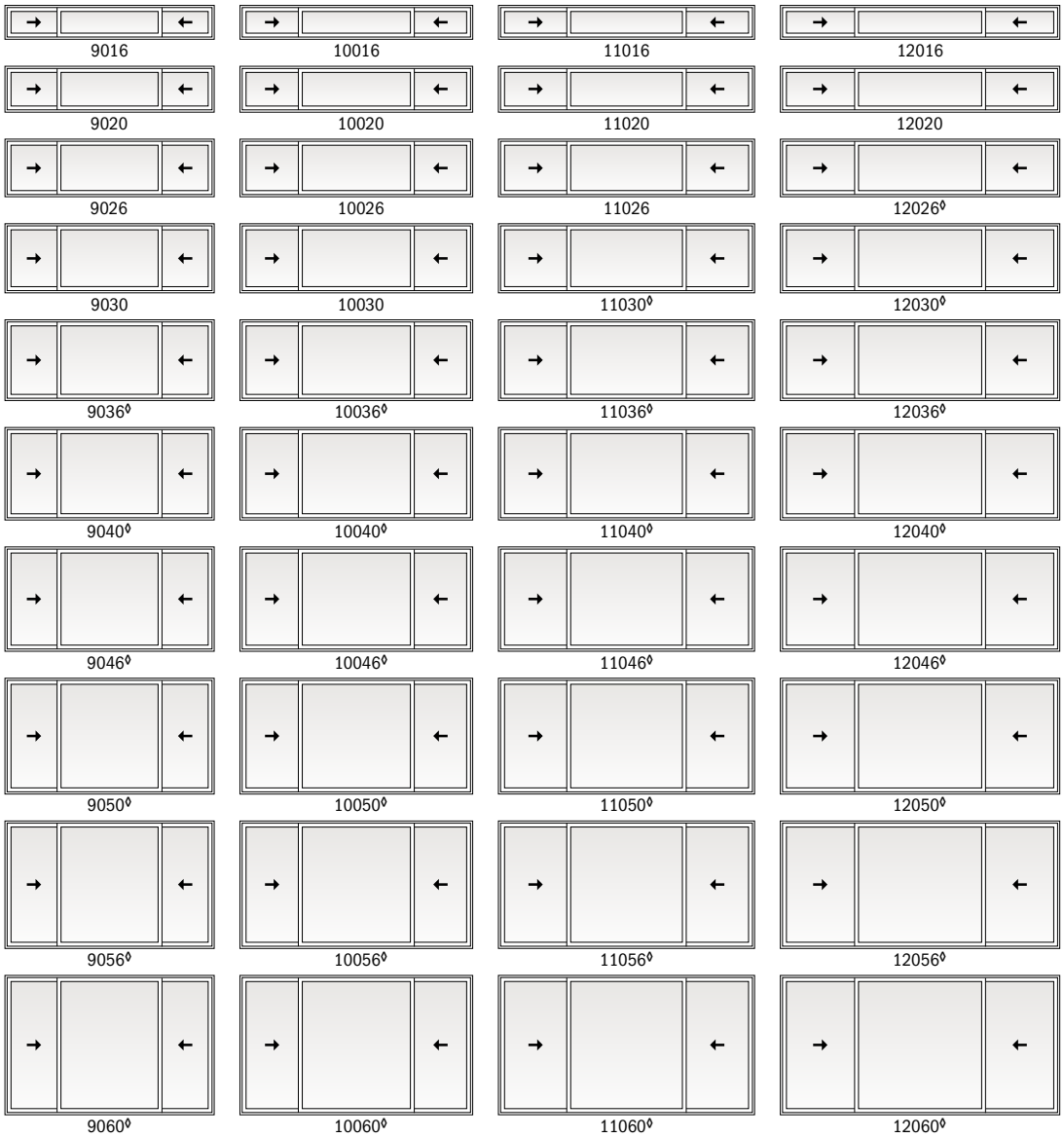

Custom-size windows are available in 1/8" (3) increments. See page 97 for custom sizes and specifications.

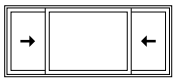

Active-Stationary-Active

Exterior view shown. Active-stationary-active (XOX) sash with a 1:2:1 sash ratio. Two locks for each sash are standard on all heights greater than 4'-2" (1270).

Grille patterns shown on page 65. Details shown on pages 66-67.

• Window Dimension always refers to outside frame-to-frame dimension.
• **Minimum Rough Opening dimensions may need to be increased to allow for use of building wraps, flashing, sill panning, brackets, fasteners or other items. See page 121 for more details.**
• Dimensions in parentheses are in millimeters.
◊ Meets or exceeds clear opening area of 5.7 sq. ft. or 0.53 m², clear opening width of 20" (508) and clear opening height of 24" (610). See table on pages 62-63.

Table of Gliding Active-Stationary-Active 1:1:1 Sash Ratio Window Sizes

Scale 1/8" (3) = 1'-0" (305) – 1:96

Window Dimension	3'-11 1/2" (1207)	4'-11 1/2" (1511)	5'-11 1/2" (1816)	6'-11 1/2" (2121)	7'-5 1/2" (2273)	7'-11 1/2" (2426)	8'-5 1/2" (2578)
Minimum Rough Opening	4'-0" (1219)	5'-0" (1524)	6'-0" (1829)	7'-0" (2134)	7'-6" (2286)	8'-0" (2438)	8'-6" (2591)
Unobstructed Glass (width of center sash)	12 11/32" (313)	16 11/32" (415)	20 11/32" (517)	24 11/32" (618)	26 11/32" (669)	28 11/32" (720)	30 11/32" (771)
Unobstructed Glass (width of single venting sash)	12 9/32" (312)	16 9/32" (414)	20 9/32" (516)	24 9/32" (617)	26 9/32" (668)	28 9/32" (719)	30 9/32" (770)

CUSTOM WIDTHS – 47 1/2" to 101 1/2"

CUSTOM HEIGHTS – 17 1/2" to 71 1/2"

1'-5 1/2" (445) / 1'-6" (457) / 11 1/4" (286)	4016	5016	6016	7016	7616	8016	8616
1'-11 1/2" (597) / 2'-0" (610) / 17 1/4" (438)	4020	5020	6020	7020	7620	8020	8620
2'-5 1/2" (749) / 2'-6" (762) / 23 1/4" (591)	4026	5026	6026	7026	7626	8026	8626
2'-11 1/2" (902) / 3'-0" (914) / 29 1/4" (743)	4030	5030	6030	7030	7630	8030◊	8630◊
3'-5 1/2" (1054) / 3'-6" (1067) / 35 1/4" (895)	4036	5036	6036	7036◊	7636◊	8036◊	8636◊
3'-11 1/2" (1207) / 4'-0" (1219) / 41 1/4" (1048)	4040	5040	6040	7040◊	7640◊	8040◊	8640◊
4'-5 1/2" (1359) / 4'-6" (1372) / 47 1/4" (1200)	4046	5046	6046	7046◊	7646◊	8046◊	8646◊
4'-11 1/2" (1511) / 5'-0" (1524) / 53 1/4" (1353)	4050	5050	6050	7050◊	7650◊	8050◊	8650◊
5'-5 1/2" (1664) / 5'-6" (1676) / 59 1/4" (1505)	4056	5056	6056	7056◊	7656◊	8056◊	8656◊
5'-11 1/2" (1816) / 6'-0" (1829) / 65 1/4" (1657)	4060	5060	6060	7060◊	7660◊	8060◊	8660◊

Custom-size windows are available in 1/8" (3) increments. See page 97 for custom sizes and specifications.

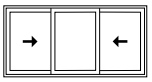

Active-Stationary-Active

Exterior view shown. Sash configuration is active-stationary-active (XOX) with a 1:1:1 equal sash ratio. Two locks are standard on all heights greater than 4'-2" (1270). Details shown on pages 66-67.

- Window Dimension always refers to outside frame-to-frame dimension.
- **Minimum Rough Opening dimensions may need to be increased to allow for use of building wraps, flashing, sill panning, brackets, fasteners or other items. See page 121 for more details.**
- Dimensions in parentheses are in millimeters.

◊ Meets or exceeds clear opening area of 5.7 sq. ft. or 0.53 m², clear opening width of 20" (508) and clear opening height of 24" (610). See table on pages 64-65.

Table of Picture Over Gliding Window With Active-Stationary or Stationary-Active Sash Sizes

Scale 1/8" (3) = 1'-0" (305) – 1:96

Window Dimension	2'-11 1/2" (902)	3'-11 1/2" (1207)	4'-11 1/2" (1511)	5'-11 1/2" (1816)
Minimum Rough Opening	3'-0" (914)	4'-0" (1219)	5'-0" (1524)	6'-0" (1829)
Unobstructed Glass (upper sash only)	29 1/4" (743)	41 1/4" (1048)	53 1/4" (1353)	65 1/4" (1657)

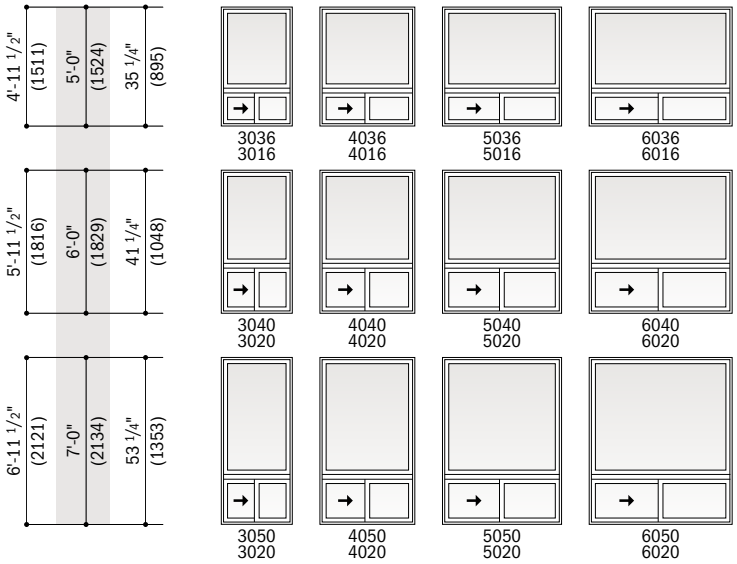

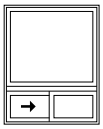

Picture Over Gliding With Active-Stationary Sash

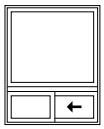

Picture Over Gliding With Stationary-Active Sash

Choose picture over gliding active-stationary (XO) sash or picture over gliding stationary-active (OX) sash as viewed from the exterior. Windows have one continuous outer frame.

For unobstructed glass dimensions of lower sash, see page 55.

Grille patterns shown on page 65. Details shown on pages 66-67.

Table of Picture Window Over Gliding With Active-Stationary-Active 1:2:1 Sash Ratio Sizes

Scale 1/8" (3) = 1'-0" (305) – 1:96

Window Dimension	5'-11 1/2" (1816)	6'-11 1/2" (2121)	7'-11 1/2" (2426)	8'-11 1/2" (2731)
Minimum Rough Opening	6'-0" (1829)	7'-0" (2134)	8'-0" (2438)	9'-0" (2743)
Unobstructed Glass (upper sash only)	65 1/4" (1657)	77 1/4" (1962)	89 1/4" (2267)	101 1/4" (2572)

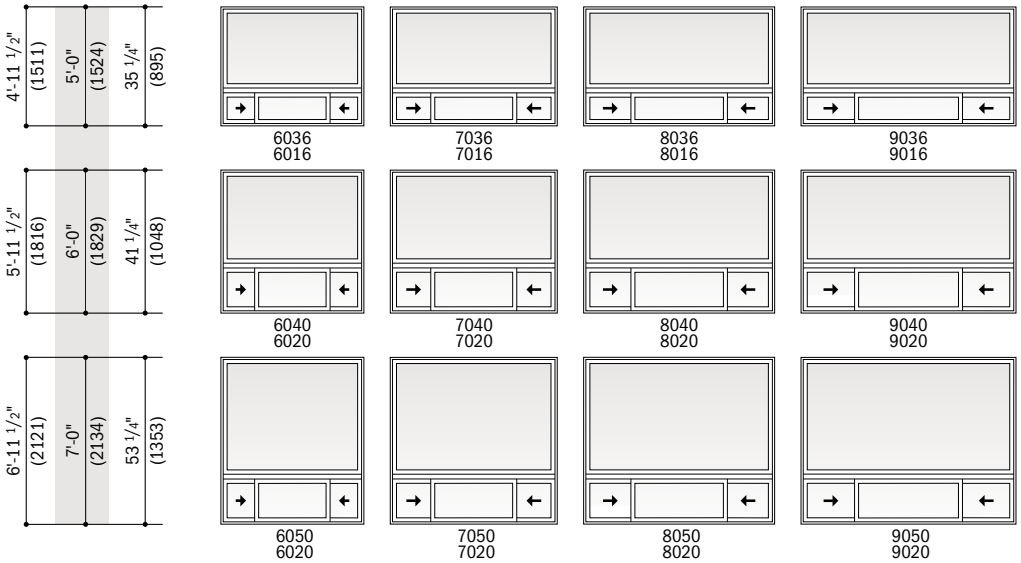

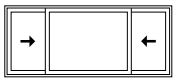

Active-Stationary-Active

Exterior view shown. Picture over active-stationary-active (XOX) sash with a 1:2:1 sash ratio. Windows have one continuous outer frame.

For unobstructed glass dimensions of lower sash, see pages 56-57.

Grille patterns shown on page 65. Details shown on pages 66-67.

- Window Dimension always refers to outside frame-to-frame dimension.
- **Minimum Rough Opening dimensions may need to be increased to allow for use of building wraps, flashing, sill panning, brackets, fasteners or other items. See page 121 for more details.**
- Dimensions in parentheses are in millimeters.

Gliding Active-Stationary or Stationary-Active Sash Window Opening and Area Specifications

Window Number	Clear Opening Area Sq. Ft./(m²)		Clear Opening in Full Open Position Width Inches/(mm)		Height Inches/(mm)		Total Glass Area Sq. Ft./(m²)		Fixed Sash Glass Area Sq. Ft./(m²)		Active Sash Glass Area Sq. Ft./(m²)		Vent Area Sq. Ft./(m²)		Top of Subfloor to Top of Inside Sill Stop Inches/(mm)		Overall Window Area Sq. Ft./(m²)	
2010	0.45	(0.04)	8 1/16"	(204)	8"	(203)	0.55	(0.05)	0.28	(0.03)	0.27	(0.03)	0.45	(0.04)	72 1/2"	(1842)	1.88	(0.17)
2016	0.78	(0.07)	8 1/16"	(204)	14"	(356)	1.18	(0.11)	0.59	(0.05)	0.59	(0.05)	0.78	(0.07)	66 1/2"	(1689)	2.86	(0.27)
2020	1.12	(0.10)	8 1/16"	(204)	20"	(508)	1.81	(0.17)	0.91	(0.08)	0.90	(0.08)	1.12	(0.10)	60 1/2"	(1537)	3.84	(0.36)
2026	1.45	(0.13)	8 1/16"	(204)	26"	(660)	2.44	(0.23)	1.22	(0.11)	1.21	(0.11)	1.45	(0.13)	54 1/2"	(1384)	4.81	(0.45)
2030	1.79	(0.17)	8 1/16"	(204)	32"	(813)	3.07	(0.28)	1.54	(0.14)	1.53	(0.14)	1.79	(0.17)	48 1/2"	(1232)	5.79	(0.54)
2036	2.12	(0.20)	8 1/16"	(204)	38"	(965)	3.69	(0.34)	1.85	(0.17)	1.84	(0.17)	2.12	(0.20)	42 1/2"	(1080)	6.77	(0.63)
2040	2.46	(0.23)	8 1/16"	(204)	44"	(1118)	4.32	(0.40)	2.17	(0.20)	2.16	(0.20)	2.46	(0.23)	36 1/2"	(927)	7.75	(0.72)
2046	2.79	(0.26)	8 1/16"	(204)	50"	(1270)	4.95	(0.46)	2.48	(0.23)	2.47	(0.23)	2.79	(0.26)	30 1/2"	(775)	8.73	(0.81)
2050	3.13	(0.29)	8 1/16"	(204)	56"	(1422)	5.58	(0.52)	2.80	(0.26)	2.78	(0.26)	3.13	(0.29)	24 1/2"	(622)	9.71	(0.90)
2056	3.46	(0.32)	8 1/16"	(204)	62"	(1575)	6.21	(0.58)	3.11	(0.29)	3.10	(0.29)	3.46	(0.32)	18 1/2"	(470)	10.69	(0.99)
2060	3.80	(0.35)	8 1/16"	(204)	68"	(1727)	6.84	(0.64)	3.43	(0.32)	3.41	(0.32)	3.80	(0.35)	12 1/2"	(318)	11.67	(1.08)
2610	0.61	(0.06)	11 1/16"	(280)	8"	(203)	0.77	(0.07)	0.39	(0.04)	0.38	(0.04)	0.61	(0.06)	72 1/2"	(1842)	2.36	(0.22)
2616	1.07	(0.10)	11 1/16"	(280)	14"	(356)	1.65	(0.15)	0.83	(0.08)	0.82	(0.08)	1.07	(0.10)	66 1/2"	(1689)	3.59	(0.33)
2620	1.53	(0.14)	11 1/16"	(280)	20"	(508)	2.53	(0.23)	1.27	(0.12)	1.26	(0.12)	1.53	(0.14)	60 1/2"	(1537)	4.81	(0.45)
2626	1.99	(0.19)	11 1/16"	(280)	26"	(660)	3.41	(0.32)	1.71	(0.16)	1.70	(0.16)	1.99	(0.19)	54 1/2"	(1384)	6.04	(0.56)
2630	2.45	(0.23)	11 1/16"	(280)	32"	(813)	4.28	(0.40)	2.15	(0.20)	2.14	(0.20)	2.45	(0.23)	48 1/2"	(1232)	7.27	(0.68)
2636	2.91	(0.27)	11 1/16"	(280)	38"	(965)	5.16	(0.48)	2.59	(0.24)	2.58	(0.24)	2.91	(0.27)	42 1/2"	(1080)	8.50	(0.79)
2640	3.37	(0.31)	11 1/16"	(280)	44"	(1118)	6.04	(0.56)	3.03	(0.28)	3.01	(0.28)	3.37	(0.31)	36 1/2"	(927)	9.73	(0.90)
2646	3.83	(0.36)	11 1/16"	(280)	50"	(1270)	6.92	(0.64)	3.47	(0.32)	3.45	(0.32)	3.83	(0.36)	30 1/2"	(775)	10.96	(1.02)
2650	4.29	(0.40)	11 1/16"	(280)	56"	(1422)	7.80	(0.72)	3.91	(0.36)	3.89	(0.36)	4.29	(0.40)	24 1/2"	(622)	12.19	(1.13)
2656	4.75	(0.44)	11 1/16"	(280)	62"	(1575)	8.68	(0.81)	4.35	(0.40)	4.33	(0.40)	4.75	(0.44)	18 1/2"	(470)	13.42	(1.25)
2660	5.21	(0.48)	11 1/16"	(280)	68"	(1727)	9.56	(0.89)	4.79	(0.44)	4.77	(0.44)	5.21	(0.48)	12 1/2"	(318)	14.65	(1.36)
3010	0.78	(0.07)	14 1/16"	(357)	8"	(203)	0.99	(0.09)	0.49	(0.05)	0.49	(0.05)	0.78	(0.07)	72 1/2"	(1842)	2.84	(0.26)
3016	1.36	(0.13)	14 1/16"	(357)	14"	(356)	2.12	(0.20)	1.06	(0.10)	1.06	(0.10)	1.36	(0.13)	66 1/2"	(1689)	4.31	(0.40)
3020	1.95	(0.18)	14 1/16"	(357)	20"	(508)	3.25	(0.30)	1.63	(0.15)	1.62	(0.15)	1.95	(0.18)	60 1/2"	(1537)	5.79	(0.54)
3026	2.53	(0.24)	14 1/16"	(357)	26"	(660)	4.37	(0.41)	2.19	(0.20)	2.18	(0.20)	2.53	(0.24)	54 1/2"	(1384)	7.27	(0.68)
3030	3.12	(0.29)	14 1/16"	(357)	32"	(813)	5.50	(0.51)	2.76	(0.26)	2.75	(0.26)	3.12	(0.29)	48 1/2"	(1232)	8.75	(0.81)
3036	3.70	(0.34)	14 1/16"	(357)	38"	(965)	6.63	(0.62)	3.32	(0.31)	3.31	(0.31)	3.70	(0.34)	42 1/2"	(1080)	10.23	(0.95)
3040	4.29	(0.40)	14 1/16"	(357)	44"	(1118)	7.76	(0.72)	3.89	(0.36)	3.87	(0.36)	4.29	(0.40)	36 1/2"	(927)	11.71	(1.09)
3046	4.87	(0.45)	14 1/16"	(357)	50"	(1270)	8.89	(0.83)	4.45	(0.41)	4.44	(0.41)	4.87	(0.45)	30 1/2"	(775)	13.19	(1.23)
3050	5.46	(0.51)	14 1/16"	(357)	56"	(1422)	10.02	(0.93)	5.02	(0.47)	5.00	(0.46)	5.46	(0.51)	24 1/2"	(622)	14.67	(1.36)
3056	6.04	(0.56)	14 1/16"	(357)	62"	(1575)	11.15	(1.04)	5.58	(0.52)	5.56	(0.52)	6.04	(0.56)	18 1/2"	(470)	16.15	(1.50)
3060	6.63	(0.62)	14 1/16"	(357)	68"	(1727)	12.28	(1.14)	6.15	(0.57)	6.13	(0.57)	6.63	(0.62)	12 1/2"	(318)	17.63	(1.64)
3610	0.95	(0.09)	17 1/16"	(433)	8"	(203)	1.21	(0.11)	0.60	(0.06)	0.60	(0.06)	0.95	(0.09)	72 1/2"	(1842)	3.31	(0.31)
3616	1.66	(0.15)	17 1/16"	(433)	14"	(356)	2.59	(0.24)	1.29	(0.12)	1.29	(0.12)	1.66	(0.15)	66 1/2"	(1689)	5.04	(0.47)
3620	2.37	(0.22)	17 1/16"	(433)	20"	(508)	3.96	(0.37)	1.98	(0.18)	1.98	(0.18)	2.37	(0.22)	60 1/2"	(1537)	6.77	(0.63)
3626	3.08	(0.29)	17 1/16"	(433)	26"	(660)	5.34	(0.50)	2.67	(0.25)	2.67	(0.25)	3.08	(0.29)	54 1/2"	(1384)	8.50	(0.79)
3630	3.79	(0.35)	17 1/16"	(433)	32"	(813)	6.72	(0.62)	3.36	(0.31)	3.36	(0.31)	3.79	(0.35)	48 1/2"	(1232)	10.23	(0.95)
3636	4.50	(0.42)	17 1/16"	(433)	38"	(965)	8.10	(0.75)	4.06	(0.38)	4.04	(0.38)	4.50	(0.42)	42 1/2"	(1080)	11.96	(1.11)
3640	5.21	(0.48)	17 1/16"	(433)	44"	(1118)	9.48	(0.88)	4.75	(0.44)	4.73	(0.44)	5.21	(0.48)	36 1/2"	(927)	13.69	(1.27)
3646	5.92	(0.55)	17 1/16"	(433)	50"	(1270)	10.86	(1.01)	5.44	(0.50)	5.42	(0.50)	5.92	(0.55)	30 1/2"	(775)	15.42	(1.43)
3650	6.63	(0.62)	17 1/16"	(433)	56"	(1422)	12.24	(1.14)	6.13	(0.57)	6.11	(0.57)	6.63	(0.62)	24 1/2"	(622)	17.15	(1.59)
3656	7.34	(0.68)	17 1/16"	(433)	62"	(1575)	13.62	(1.26)	6.82	(0.63)	6.80	(0.63)	7.34	(0.68)	18 1/2"	(470)	18.88	(1.75)
3660	8.05	(0.75)	17 1/16"	(433)	68"	(1727)	14.99	(1.39)	7.51	(0.70)	7.49	(0.70)	8.05	(0.75)	12 1/2"	(318)	20.61	(1.91)
4010	1.11	(0.10)	20 1/16"	(509)	8"	(203)	1.43	(0.13)	0.71	(0.07)	0.71	(0.07)	1.11	(0.10)	72 1/2"	(1842)	3.79	(0.35)
4016	1.95	(0.18)	20 1/16"	(509)	14"	(356)	3.05	(0.28)	1.53	(0.14)	1.53	(0.14)	1.95	(0.18)	66 1/2"	(1689)	5.77	(0.54)
4020	2.78	(0.26)	20 1/16"	(509)	20"	(508)	4.68	(0.44)	2.34	(0.22)	2.34	(0.22)	2.78	(0.26)	60 1/2"	(1537)	7.75	(0.72)
4026	3.62	(0.34)	20 1/16"	(509)	26"	(660)	6.31	(0.59)	3.16	(0.29)	3.15	(0.29)	3.62	(0.34)	54 1/2"	(1384)	9.73	(0.90)
4030	4.45	(0.41)	20 1/16"	(509)	32"	(813)	7.94	(0.74)	3.97	(0.37)	3.97	(0.37)	4.45	(0.41)	48 1/2"	(1232)	11.71	(1.09)
4036	5.29	(0.49)	20 1/16"	(509)	38"	(965)	9.57	(0.89)	4.79	(0.44)	4.78	(0.44)	5.29	(0.49)	42 1/2"	(1080)	13.69	(1.27)
4040 ◊	6.12	(0.57)	20 1/16"	(509)	44"	(1118)	11.20	(1.04)	5.60	(0.52)	5.59	(0.52)	6.12	(0.57)	36 1/2"	(927)	15.67	(1.46)
4046 ◊	6.96	(0.65)	20 1/16"	(509)	50"	(1270)	12.83	(1.19)	6.42	(0.60)	6.41	(0.60)	6.96	(0.65)	30 1/2"	(775)	17.65	(1.64)
4050 ◊	7.79	(0.72)	20 1/16"	(509)	56"	(1422)	14.46	(1.34)	7.24	(0.67)	7.22	(0.67)	7.79	(0.72)	24 1/2"	(622)	19.63	(1.82)
4056 ◊	8.63	(0.80)	20 1/16"	(509)	62"	(1575)	16.08	(1.49)	8.05	(0.75)	8.03	(0.75)	8.63	(0.80)	18 1/2"	(470)	21.61	(2.01)
4060 ◊	9.46	(0.88)	20 1/16"	(509)	68"	(1727)	17.71	(1.65)	8.87	(0.82)	8.85	(0.82)	9.46	(0.88)	12 1/2"	(318)	23.59	(2.19)
4610	1.28	(0.12)	23 1/16"	(585)	8"	(203)	1.64	(0.15)	0.82	(0.08)	0.82	(0.08)	1.28	(0.12)	72 1/2"	(1842)	4.27	(0.40)
4616	2.24	(0.21)	23 1/16"	(585)	14"	(356)	3.52	(0.33)	1.76	(0.16)	1.76	(0.16)	2.24	(0.21)	66 1/2"	(1689)	6.50	(0.60)
4620	3.20	(0.30)	23 1/16"	(585)	20"	(508)	5.40	(0.50)	2.70	(0.25)	2.70	(0.25)	3.20	(0.30)	60 1/2"	(1537)	8.73	(0.81)

• Top of Subfloor to Top of Inside Sill Stop is calculated based upon a structural header height of 6'-10 1/2" (2096).
• Dimensions in parentheses are in millimeters or square meters.
◊ Meets or exceeds clear opening area of 5.7 sq.ft. or 0.53 m², clear opening width of 20" (508) and clear opening height of 24" (610).

continued on next page

Gliding Active-Stationary or Stationary-Active Sash Window Opening and Area Specifications *(continued)*

Window Number	Clear Opening Area Sq. Ft./(m²)	Clear Opening in Full Open Position Width Inches/(mm)	Clear Opening in Full Open Position Height Inches/(mm)	Total Glass Area Sq. Ft./(m²)	Fixed Sash Glass Area Sq. Ft./(m²)	Active Sash Glass Area Sq. Ft./(m²)	Vent Area Sq. Ft./(m²)	Top of Subfloor to Top of Inside Sill Stop Inches/(mm)	Overall Window Area Sq. Ft./(m²)
4626	4.16 (0.39)	23 1/16" (585)	26" (660)	7.28 (0.68)	3.64 (0.34)	3.64 (0.34)	4.16 (0.39)	54 1/2" (1384)	10.96 (1.02)
4630	5.12 (0.48)	23 1/16" (585)	32" (813)	9.16 (0.85)	4.58 (0.43)	4.58 (0.43)	5.12 (0.48)	48 1/2" (1232)	13.19 (1.23)
4636 ◊	6.08 (0.56)	23 1/16" (585)	38" (965)	11.04 (1.03)	5.52 (0.51)	5.51 (0.51)	6.08 (0.56)	42 1/2" (1080)	15.42 (1.43)
4640 ◊	7.04 (0.65)	23 1/16" (585)	44" (1118)	12.92 (1.20)	6.46 (0.60)	6.45 (0.60)	7.04 (0.65)	36 1/2" (927)	17.65 (1.64)
4646 ◊	8.00 (0.74)	23 1/16" (585)	50" (1270)	14.80 (1.37)	7.40 (0.69)	7.39 (0.69)	8.00 (0.74)	30 1/2" (775)	19.88 (1.85)
4650 ◊	8.96 (0.83)	23 1/16" (585)	56" (1422)	16.67 (1.55)	8.34 (0.78)	8.33 (0.77)	8.96 (0.83)	24 1/2" (622)	22.11 (2.05)
4656 ◊	9.92 (0.92)	23 1/16" (585)	62" (1575)	18.55 (1.72)	9.28 (0.86)	9.27 (0.86)	9.92 (0.92)	18 1/2" (470)	24.34 (2.26)
4660 ◊	10.88 (1.01)	23 1/16" (585)	68" (1727)	20.43 (1.90)	10.23 (0.95)	10.21 (0.95)	10.88 (1.01)	12 1/2" (318)	26.56 (2.47)
5010	1.45 (0.13)	26 1/16" (661)	8" (203)	1.86 (0.17)	0.93 (0.09)	0.93 (0.09)	1.45 (0.13)	72 1/2" (1842)	4.75 (0.44)
5016	2.53 (0.24)	26 1/16" (661)	14" (356)	3.99 (0.37)	2.00 (0.19)	1.99 (0.19)	2.53 (0.24)	66 1/2" (1689)	7.23 (0.67)
5020	3.62 (0.34)	26 1/16" (661)	20" (508)	6.12 (0.57)	3.06 (0.28)	3.06 (0.28)	3.62 (0.34)	60 1/2" (1537)	9.71 (0.90)
5026	4.70 (0.44)	26 1/16" (661)	26" (660)	8.25 (0.77)	4.13 (0.38)	4.12 (0.38)	4.70 (0.44)	54 1/2" (1384)	12.19 (1.13)
5030 ◊	5.79 (0.54)	26 1/16" (661)	32" (813)	10.38 (0.96)	5.19 (0.48)	5.18 (0.48)	5.79 (0.54)	48 1/2" (1232)	14.67 (1.36)
5036 ◊	6.87 (0.64)	26 1/16" (661)	38" (965)	12.51 (1.16)	6.26 (0.58)	6.25 (0.58)	6.87 (0.64)	42 1/2" (1080)	17.15 (1.59)
5040 ◊	7.96 (0.74)	26 1/16" (661)	44" (1118)	14.64 (1.36)	7.32 (0.68)	7.31 (0.68)	7.96 (0.74)	36 1/2" (927)	19.63 (1.82)
5046 ◊	9.04 (0.84)	26 1/16" (661)	50" (1270)	16.76 (1.56)	8.39 (0.78)	8.38 (0.78)	9.04 (0.84)	30 1/2" (775)	22.11 (2.05)
5050 ◊	10.13 (0.94)	26 1/16" (661)	56" (1422)	18.89 (1.76)	9.45 (0.88)	9.44 (0.88)	10.13 (0.94)	24 1/2" (622)	24.59 (2.28)
5056 ◊	11.21 (1.04)	26 1/16" (661)	62" (1575)	21.02 (1.95)	10.52 (0.98)	10.50 (0.98)	11.21 (1.04)	18 1/2" (470)	27.06 (2.51)
5060 ◊	12.30 (1.14)	26 1/16" (661)	68" (1727)	23.15 (2.15)	11.58 (1.08)	11.57 (1.07)	12.30 (1.14)	12 1/2" (318)	29.54 (2.74)
5610	1.61 (0.15)	29 1/16" (738)	8" (203)	2.08 (0.19)	1.04 (0.10)	1.04 (0.10)	1.61 (0.15)	72 1/2" (1842)	5.23 (0.49)
5616	2.82 (0.26)	29 1/16" (738)	14" (356)	4.46 (0.41)	2.23 (0.21)	2.23 (0.21)	2.82 (0.26)	66 1/2" (1689)	7.96 (0.74)
5620	4.03 (0.37)	29 1/16" (738)	20" (508)	6.84 (0.64)	3.42 (0.32)	3.42 (0.32)	4.03 (0.37)	60 1/2" (1537)	10.69 (0.99)
5626	5.24 (0.49)	29 1/16" (738)	26" (660)	9.22 (0.86)	4.61 (0.43)	4.61 (0.43)	5.24 (0.49)	54 1/2" (1384)	13.42 (1.25)
5630 ◊	6.45 (0.60)	29 1/16" (738)	32" (813)	11.60 (1.08)	5.80 (0.54)	5.79 (0.54)	6.45 (0.60)	48 1/2" (1232)	16.15 (1.50)
5636 ◊	7.66 (0.71)	29 1/16" (738)	38" (965)	13.98 (1.30)	6.99 (0.65)	6.98 (0.65)	7.66 (0.71)	42 1/2" (1080)	18.88 (1.75)
5640 ◊	8.87 (0.82)	29 1/16" (738)	44" (1118)	16.35 (1.52)	8.18 (0.76)	8.17 (0.76)	8.87 (0.82)	36 1/2" (927)	21.61 (2.01)
5646 ◊	10.08 (0.94)	29 1/16" (738)	50" (1270)	18.73 (1.74)	9.37 (0.87)	9.36 (0.87)	10.08 (0.94)	30 1/2" (775)	24.34 (2.26)
5650 ◊	11.29 (1.05)	29 1/16" (738)	56" (1422)	21.11 (1.96)	10.56 (0.98)	10.55 (0.98)	11.29 (1.05)	24 1/2" (622)	27.06 (2.51)
5656 ◊	12.50 (1.16)	29 1/16" (738)	62" (1575)	23.49 (2.18)	11.75 (1.09)	11.74 (1.09)	12.50 (1.16)	18 1/2" (470)	29.79 (2.77)
5660 ◊	13.71 (1.27)	29 1/16" (738)	68" (1727)	25.87 (2.40)	12.94 (1.20)	12.92 (1.20)	13.71 (1.27)	12 1/2" (318)	32.52 (3.02)
6010	1.78 (0.17)	32 1/16" (814)	8" (203)	2.30 (0.21)	1.15 (0.11)	1.15 (0.11)	1.78 (0.17)	72 1/2" (1842)	5.71 (0.53)
6016	3.11 (0.29)	32 1/16" (814)	14" (356)	4.93 (0.46)	2.47 (0.23)	2.46 (0.23)	3.11 (0.29)	66 1/2" (1689)	8.69 (0.81)
6020	4.45 (0.41)	32 1/16" (814)	20" (508)	7.56 (0.70)	3.78 (0.35)	3.78 (0.35)	4.45 (0.41)	60 1/2" (1537)	11.67 (1.08)
6026 ◊	5.78 (0.54)	32 1/16" (814)	26" (660)	10.19 (0.95)	5.10 (0.47)	5.09 (0.47)	5.78 (0.54)	54 1/2" (1384)	14.65 (1.36)
6030 ◊	7.12 (0.66)	32 1/16" (814)	32" (813)	12.82 (1.19)	6.41 (0.60)	6.40 (0.59)	7.12 (0.66)	48 1/2" (1232)	17.63 (1.64)
6036 ◊	8.45 (0.79)	32 1/16" (814)	38" (965)	15.44 (1.43)	7.73 (0.72)	7.72 (0.72)	8.45 (0.79)	42 1/2" (1080)	20.61 (1.91)
6040 ◊	9.79 (0.91)	32 1/16" (814)	44" (1118)	18.07 (1.68)	9.04 (0.84)	9.03 (0.84)	9.79 (0.91)	36 1/2" (927)	23.59 (2.19)
6046 ◊	11.12 (1.03)	32 1/16" (814)	50" (1270)	20.70 (1.92)	10.36 (0.96)	10.34 (0.96)	11.12 (1.03)	30 1/2" (775)	26.56 (2.47)
6050 ◊	12.46 (1.16)	32 1/16" (814)	56" (1422)	23.33 (2.17)	11.67 (1.08)	11.66 (1.08)	12.46 (1.16)	24 1/2" (622)	29.54 (2.74)
6056 ◊	13.79 (1.28)	32 1/16" (814)	62" (1575)	25.96 (2.41)	12.99 (1.21)	12.97 (1.21)	13.79 (1.28)	18 1/2" (470)	32.52 (3.02)
6060 ◊	15.13 (1.41)	32 1/16" (814)	68" (1727)	28.59 (2.66)	14.30 (1.33)	14.28 (1.33)	15.13 (1.41)	12 1/2" (318)	35.50 (3.30)

• Top of Subfloor to Top of Inside Sill Stop is calculated based upon a structural header height of 6'-10 1/2" (2096).
• Dimensions in parentheses are in millimeters or square meters.
◊ Meets or exceeds clear opening area of 5.7 sq.ft. or 0.53 m², clear opening width of 20" (508) and clear opening height of 24" (610).

Gliding Active-Stationary-Active 1:2:1 Sash Ratio Window Opening and Area Specifications

Window Number	Clear Opening Area Sq. Ft./(m²)		Clear Opening in Full Open Position Width Inches/(mm)		Height Inches/(mm)		Total Glass Area Sq. Ft./(m²)		Fixed Sash Glass Area Sq. Ft./(m²)		Single Active Sash Glass Area Sq. Ft./(m²)		Vent Area Sq. Ft./(m²)		Top of Subfloor to Top of Inside Sill Stop Inches/(mm)		Overall Window Area Sq. Ft./(m²)	
5016	1.16	(0.11)	11 7/8"	(302)	14"	(356)	3.82	(0.36)	2.18	(0.20)	0.82	(0.08)	2.31	(0.21)	66 1/2"	(1689)	7.23	(0.67)
5020	1.65	(0.15)	11 7/8"	(302)	20"	(508)	5.86	(0.54)	3.34	(0.31)	1.26	(0.12)	3.31	(0.31)	60 1/2"	(1537)	9.71	(0.90)
5026	2.15	(0.20)	11 7/8"	(302)	26"	(660)	7.90	(0.73)	4.50	(0.42)	1.70	(0.16)	4.30	(0.40)	54 1/2"	(1384)	12.19	(1.13)
5030	2.64	(0.25)	11 7/8"	(302)	32"	(813)	9.94	(0.92)	5.66	(0.53)	2.14	(0.20)	5.29	(0.49)	48 1/2"	(1232)	14.67	(1.36)
5036	3.14	(0.29)	11 7/8"	(302)	38"	(965)	11.98	(1.11)	6.83	(0.63)	2.58	(0.24)	6.28	(0.58)	42 1/2"	(1080)	17.15	(1.59)
5040	3.64	(0.34)	11 7/8"	(302)	44"	(1118)	14.02	(1.30)	7.99	(0.74)	3.01	(0.28)	7.27	(0.68)	36 1/2"	(927)	19.63	(1.82)
5046	4.13	(0.38)	11 7/8"	(302)	50"	(1270)	16.06	(1.49)	9.15	(0.85)	3.45	(0.32)	8.26	(0.77)	30 1/2"	(775)	22.11	(2.05)
5050	4.63	(0.43)	11 7/8"	(302)	56"	(1422)	18.09	(1.68)	10.31	(0.96)	3.89	(0.36)	9.25	(0.86)	24 1/2"	(622)	24.59	(2.28)
5056	5.12	(0.48)	11 7/8"	(302)	62"	(1575)	20.13	(1.87)	11.47	(1.07)	4.33	(0.40)	10.25	(0.95)	18 1/2"	(470)	27.06	(2.51)
5060	5.62	(0.52)	11 7/8"	(302)	68"	(1727)	22.17	(2.06)	12.63	(1.17)	4.77	(0.44)	11.24	(1.04)	12 1/2"	(318)	29.54	(2.74)
6016	1.45	(0.13)	14 7/8"	(378)	14"	(356)	4.76	(0.44)	2.65	(0.25)	1.06	(0.10)	2.90	(0.27)	66 1/2"	(1689)	8.69	(0.81)
6020	2.07	(0.19)	14 7/8"	(378)	20"	(508)	7.30	(0.68)	4.06	(0.38)	1.62	(0.15)	4.14	(0.38)	60 1/2"	(1537)	11.67	(1.08)
6026	2.69	(0.25)	14 7/8"	(378)	26"	(660)	9.84	(0.91)	5.47	(0.51)	2.18	(0.20)	5.38	(0.50)	54 1/2"	(1384)	14.65	(1.36)
6030	3.31	(0.31)	14 7/8"	(378)	32"	(813)	12.38	(1.15)	6.88	(0.64)	2.75	(0.26)	6.62	(0.62)	48 1/2"	(1232)	17.63	(1.64)
6036	3.93	(0.37)	14 7/8"	(378)	38"	(965)	14.92	(1.39)	8.29	(0.77)	3.31	(0.31)	7.86	(0.73)	42 1/2"	(1080)	20.61	(1.91)
6040	4.55	(0.42)	14 7/8"	(378)	44"	(1118)	17.45	(1.62)	9.71	(0.90)	3.87	(0.36)	9.10	(0.85)	36 1/2"	(927)	23.59	(2.19)
6046	5.17	(0.48)	14 7/8"	(378)	50"	(1270)	19.99	(1.86)	11.12	(1.03)	4.44	(0.41)	10.35	(0.96)	30 1/2"	(775)	26.56	(2.47)
6050	5.79	(0.54)	14 7/8"	(378)	56"	(1422)	22.53	(2.09)	12.53	(1.16)	5.00	(0.46)	11.59	(1.08)	24 1/2"	(622)	29.54	(2.74)
6056	6.41	(0.60)	14 7/8"	(378)	62"	(1575)	25.07	(2.33)	13.94	(1.30)	5.56	(0.52)	12.83	(1.19)	18 1/2"	(470)	32.52	(3.02)
6060	7.04	(0.65)	14 7/8"	(378)	68"	(1727)	27.61	(2.56)	15.35	(1.43)	6.13	(0.57)	14.07	(1.31)	12 1/2"	(318)	35.50	(3.30)
7016	1.74	(0.16)	17 7/8"	(455)	14"	(356)	5.70	(0.53)	3.12	(0.29)	1.29	(0.12)	3.48	(0.32)	66 1/2"	(1689)	10.15	(0.94)
7020	2.49	(0.23)	17 7/8"	(455)	20"	(508)	8.74	(0.81)	4.78	(0.44)	1.98	(0.18)	4.97	(0.46)	60 1/2"	(1537)	13.63	(1.27)
7026	3.23	(0.30)	17 7/8"	(455)	26"	(660)	11.78	(1.09)	6.44	(0.60)	2.67	(0.25)	6.46	(0.60)	54 1/2"	(1384)	17.11	(1.59)
7030	3.98	(0.37)	17 7/8"	(455)	32"	(813)	14.81	(1.38)	8.10	(0.75)	3.36	(0.31)	7.96	(0.74)	48 1/2"	(1232)	20.59	(1.91)
7036	4.72	(0.44)	17 7/8"	(455)	38"	(965)	17.85	(1.66)	9.76	(0.91)	4.04	(0.38)	9.45	(0.88)	42 1/2"	(1080)	24.06	(2.24)
7040	5.47	(0.51)	17 7/8"	(455)	44"	(1118)	20.89	(1.94)	11.42	(1.06)	4.73	(0.44)	10.94	(1.02)	36 1/2"	(927)	27.54	(2.56)
7046	6.21	(0.58)	17 7/8"	(455)	50"	(1270)	23.93	(2.22)	13.09	(1.22)	5.42	(0.50)	12.43	(1.15)	30 1/2"	(775)	31.02	(2.88)
7050	6.96	(0.65)	17 7/8"	(455)	56"	(1422)	26.97	(2.51)	14.75	(1.37)	6.11	(0.57)	13.92	(1.29)	24 1/2"	(622)	34.50	(3.21)
7056	7.71	(0.72)	17 7/8"	(455)	62"	(1575)	30.01	(2.79)	16.41	(1.52)	6.80	(0.63)	15.41	(1.43)	18 1/2"	(470)	37.98	(3.53)
7060	8.45	(0.79)	17 7/8"	(455)	68"	(1727)	33.05	(3.07)	18.07	(1.68)	7.49	(0.70)	16.90	(1.57)	12 1/2"	(318)	41.46	(3.85)
7616	1.89	(0.18)	19 3/8"	(493)	14"	(356)	6.17	(0.57)	3.35	(0.31)	1.41	(0.13)	3.77	(0.35)	66 1/2"	(1689)	10.88	(1.01)
7620	2.69	(0.25)	19 3/8"	(493)	20"	(508)	9.46	(0.88)	5.14	(0.48)	2.16	(0.20)	5.39	(0.50)	60 1/2"	(1537)	14.61	(1.36)
7626	3.50	(0.33)	19 3/8"	(493)	26"	(660)	12.74	(1.18)	6.92	(0.64)	2.91	(0.27)	7.01	(0.65)	54 1/2"	(1384)	18.34	(1.70)
7630	4.31	(0.40)	19 3/8"	(493)	32"	(813)	16.03	(1.49)	8.71	(0.81)	3.66	(0.34)	8.62	(0.80)	48 1/2"	(1232)	22.06	(2.05)
7636	5.12	(0.48)	19 3/8"	(493)	38"	(965)	19.32	(1.80)	10.50	(0.98)	4.41	(0.41)	10.24	(0.95)	42 1/2"	(1080)	25.79	(2.40)
7640	5.93	(0.55)	19 3/8"	(493)	44"	(1118)	22.61	(2.10)	12.28	(1.14)	5.16	(0.48)	11.85	(1.10)	36 1/2"	(927)	29.52	(2.74)
7646	6.74	(0.63)	19 3/8"	(493)	50"	(1270)	25.90	(2.41)	14.07	(1.31)	5.91	(0.55)	13.47	(1.25)	30 1/2"	(775)	33.25	(3.09)
7650	7.54	(0.70)	19 3/8"	(493)	56"	(1422)	29.19	(2.71)	15.86	(1.47)	6.67	(0.62)	15.09	(1.40)	24 1/2"	(622)	36.98	(3.44)
7656	8.35	(0.78)	19 3/8"	(493)	62"	(1575)	32.48	(3.02)	17.64	(1.64)	7.42	(0.69)	16.70	(1.55)	18 1/2"	(470)	40.71	(3.78)
7660	9.16	(0.85)	19 3/8"	(493)	68"	(1727)	35.77	(3.32)	19.43	(1.81)	8.17	(0.76)	18.32	(1.70)	12 1/2"	(318)	44.44	(4.13)
8016	2.03	(0.19)	20 7/8"	(531)	14"	(356)	6.64	(0.62)	3.58	(0.33)	1.53	(0.14)	4.06	(0.38)	66 1/2"	(1689)	11.61	(1.08)
8020	2.90	(0.27)	20 7/8"	(531)	20"	(508)	10.17	(0.95)	5.50	(0.51)	2.34	(0.22)	5.81	(0.54)	60 1/2"	(1537)	15.59	(1.45)
8026	3.77	(0.35)	20 7/8"	(531)	26"	(660)	13.71	(1.27)	7.41	(0.69)	3.15	(0.29)	7.55	(0.70)	54 1/2"	(1384)	19.56	(1.82)
8030	4.64	(0.43)	20 7/8"	(531)	32"	(813)	17.25	(1.60)	9.32	(0.87)	3.97	(0.37)	9.29	(0.86)	48 1/2"	(1232)	23.54	(2.19)
8036	5.52	(0.51)	20 7/8"	(531)	38"	(965)	20.79	(1.93)	11.23	(1.04)	4.78	(0.44)	11.03	(1.02)	42 1/2"	(1080)	27.52	(2.56)
8040 ◊	6.39	(0.59)	20 7/8"	(531)	44"	(1118)	24.33	(2.26)	13.14	(1.22)	5.59	(0.52)	12.77	(1.19)	36 1/2"	(927)	31.50	(2.93)
8046 ◊	7.26	(0.67)	20 7/8"	(531)	50"	(1270)	27.87	(2.59)	15.06	(1.40)	6.41	(0.60)	14.51	(1.35)	30 1/2"	(775)	35.48	(3.30)
8050 ◊	8.13	(0.76)	20 7/8"	(531)	56"	(1422)	31.41	(2.92)	16.97	(1.58)	7.22	(0.67)	16.25	(1.51)	24 1/2"	(622)	39.46	(3.67)
8056 ◊	9.00	(0.84)	20 7/8"	(531)	62"	(1575)	34.95	(3.25)	18.88	(1.75)	8.03	(0.75)	18.00	(1.67)	18 1/2"	(470)	43.44	(4.04)
8060 ◊	9.87	(0.92)	20 7/8"	(531)	68"	(1727)	38.48	(3.58)	20.79	(1.93)	8.85	(0.82)	19.74	(1.83)	12 1/2"	(318)	47.42	(4.41)
8616	2.18	(0.20)	22 3/8"	(569)	14"	(356)	7.10	(0.66)	3.82	(0.35)	1.64	(0.15)	4.36	(0.40)	66 1/2"	(1689)	12.34	(1.15)
8620	3.11	(0.29)	22 3/8"	(569)	20"	(508)	10.89	(1.01)	5.86	(0.54)	2.52	(0.23)	6.22	(0.58)	60 1/2"	(1537)	16.56	(1.54)
8626	4.04	(0.38)	22 3/8"	(569)	26"	(660)	14.68	(1.36)	7.89	(0.73)	3.39	(0.32)	8.09	(0.75)	54 1/2"	(1384)	20.79	(1.93)
8630	4.98	(0.46)	22 3/8"	(569)	32"	(813)	18.47	(1.72)	9.93	(0.92)	4.27	(0.40)	9.96	(0.92)	48 1/2"	(1232)	25.02	(2.32)
8636 ◊	5.91	(0.55)	22 3/8"	(569)	38"	(965)	22.26	(2.07)	11.97	(1.11)	5.15	(0.48)	11.82	(1.10)	42 1/2"	(1080)	29.25	(2.72)
8640 ◊	6.84	(0.64)	22 3/8"	(569)	44"	(1118)	26.05	(2.42)	14.00	(1.30)	6.02	(0.56)	13.69	(1.27)	36 1/2"	(927)	33.48	(3.11)
8646 ◊	7.78	(0.72)	22 3/8"	(569)	50"	(1270)	29.84	(2.77)	16.04	(1.49)	6.90	(0.64)	15.55	(1.45)	30 1/2"	(775)	37.71	(3.50)
8650 ◊	8.71	(0.81)	22 3/8"	(569)	56"	(1422)	33.63	(3.12)	18.08	(1.68)	7.77	(0.72)	17.42	(1.62)	24 1/2"	(622)	41.94	(3.90)

• Top of Subfloor to Top of Inside Sill Stop is calculated based upon a structural header height of 6'-10 1/2" (2096).
• Dimensions in parentheses are in millimeters or square meters.
◊ Meets or exceeds clear opening area of 5.7 sq.ft. or 0.53 m², clear opening width of 20" (508) and clear opening height of 24" (610).

continued on next page

Gliding Active-Stationary-Active 1:2:1 Sash Ratio Window Opening and Area Specifications *(continued)*

Window Number	Clear Opening Area Sq. Ft./(m²)		Clear Opening in Full Open Position Width Inches/(mm)		Height Inches/(mm)		Total Glass Area Sq. Ft./(m²)		Fixed Sash Glass Area Sq. Ft./(m²)		Single Active Sash Glass Area Sq. Ft./(m²)		Vent Area Sq. Ft./(m²)		Top of Subfloor to Top of Inside Sill Stop Inches/(mm)		Overall Window Area Sq. Ft./(m²)	
8656◊	9.64	(0.90)	22 3/8"	(569)	62"	(1575)	37.41	(3.48)	20.11	(1.87)	8.65	(0.80)	19.29	(1.79)	18 1/2"	(470)	46.17	(4.29)
8660◊	10.58	(0.98)	22 3/8"	(569)	68"	(1727)	41.20	(3.83)	22.15	(2.06)	9.53	(0.89)	21.15	(1.97)	12 1/2"	(318)	50.40	(4.68)
9016	2.32	(0.22)	23 7/8"	(607)	14"	(356)	7.57	(0.70)	4.05	(0.38)	1.76	(0.16)	4.65	(0.43)	66 1/2"	(1689)	13.06	(1.21)
9020	3.32	(0.31)	23 7/8"	(607)	20"	(508)	11.61	(1.08)	6.22	(0.58)	2.70	(0.25)	6.64	(0.62)	60 1/2"	(1537)	17.54	(1.63)
9026	4.32	(0.40)	23 7/8"	(607)	26"	(660)	15.65	(1.45)	8.38	(0.78)	3.64	(0.34)	8.63	(0.80)	54 1/2"	(1384)	22.02	(2.05)
9030	5.31	(0.49)	23 7/8"	(607)	32"	(813)	19.69	(1.83)	10.54	(0.98)	4.58	(0.43)	10.62	(0.99)	48 1/2"	(1232)	26.50	(2.46)
9036◊	6.31	(0.59)	23 7/8"	(607)	38"	(965)	23.73	(2.20)	12.70	(1.18)	5.51	(0.51)	12.61	(1.17)	42 1/2"	(1080)	30.98	(2.88)
9040◊	7.30	(0.68)	23 7/8"	(607)	44"	(1118)	27.77	(2.58)	14.86	(1.38)	6.45	(0.60)	14.60	(1.36)	36 1/2"	(927)	35.46	(3.29)
9046◊	8.30	(0.77)	23 7/8"	(607)	50"	(1270)	31.81	(2.95)	17.02	(1.58)	7.39	(0.69)	16.60	(1.54)	30 1/2"	(775)	39.94	(3.71)
9050◊	9.29	(0.86)	23 7/8"	(607)	56"	(1422)	35.84	(3.33)	19.19	(1.78)	8.33	(0.77)	18.59	(1.73)	24 1/2"	(622)	44.42	(4.13)
9056◊	10.29	(0.96)	23 7/8"	(607)	62"	(1575)	39.88	(3.71)	21.35	(1.98)	9.27	(0.86)	20.58	(1.91)	18 1/2"	(470)	48.90	(4.54)
9060◊	11.29	(1.05)	23 7/8"	(607)	68"	(1727)	43.92	(4.08)	23.51	(2.18)	10.21	(0.95)	22.57	(2.10)	12 1/2"	(318)	53.38	(4.96)
10016	2.62	(0.24)	26 7/8"	(683)	14"	(356)	8.51	(0.79)	4.52	(0.42)	1.99	(0.19)	5.23	(0.49)	66 1/2"	(1689)	14.52	(1.35)
10020	3.74	(0.35)	26 7/8"	(683)	20"	(508)	13.05	(1.21)	6.93	(0.64)	3.06	(0.28)	7.47	(0.69)	60 1/2"	(1537)	19.50	(1.81)
10026	4.86	(0.45)	26 7/8"	(683)	26"	(660)	17.59	(1.63)	9.35	(0.87)	4.12	(0.38)	9.71	(0.90)	54 1/2"	(1384)	24.48	(2.27)
10030	5.98	(0.56)	26 7/8"	(683)	32"	(813)	22.13	(2.06)	11.76	(1.09)	5.18	(0.48)	11.96	(1.11)	48 1/2"	(1232)	29.46	(2.74)
10036◊	7.10	(0.66)	26 7/8"	(683)	38"	(965)	26.67	(2.48)	14.17	(1.32)	6.25	(0.58)	14.20	(1.32)	42 1/2"	(1080)	34.44	(3.20)
10040◊	8.22	(0.76)	26 7/8"	(683)	44"	(1118)	31.20	(2.90)	16.58	(1.54)	7.31	(0.68)	16.44	(1.53)	36 1/2"	(927)	39.42	(3.66)
10046◊	9.34	(0.87)	26 7/8"	(683)	50"	(1270)	35.74	(3.32)	18.99	(1.76)	8.38	(0.78)	18.68	(1.74)	30 1/2"	(775)	44.40	(4.12)
10050◊	10.46	(0.97)	26 7/8"	(683)	56"	(1422)	40.28	(3.74)	21.40	(1.99)	9.44	(0.88)	20.92	(1.94)	24 1/2"	(622)	49.38	(4.59)
10056◊	11.58	(1.08)	26 7/8"	(683)	62"	(1575)	44.82	(4.16)	23.82	(2.21)	10.50	(0.98)	23.16	(2.15)	18 1/2"	(470)	54.36	(5.05)
10060◊	12.70	(1.18)	26 7/8"	(683)	68"	(1727)	49.36	(4.59)	26.23	(2.44)	11.57	(1.07)	25.40	(2.36)	12 1/2"	(318)	59.34	(5.51)
11016	2.91	(0.27)	29 7/8"	(759)	14"	(356)	9.45	(0.88)	4.99	(0.46)	2.23	(0.21)	5.81	(0.54)	66 1/2"	(1689)	15.98	(1.48)
11020	4.15	(0.39)	29 7/8"	(759)	20"	(508)	14.49	(1.35)	7.65	(0.71)	3.42	(0.32)	8.31	(0.77)	60 1/2"	(1537)	21.46	(1.99)
11026	5.40	(0.50)	29 7/8"	(759)	26"	(660)	19.53	(1.81)	10.31	(0.96)	4.61	(0.43)	10.80	(1.00)	54 1/2"	(1384)	26.94	(2.50)
11030◊	6.64	(0.62)	29 7/8"	(759)	32"	(813)	24.56	(2.28)	12.98	(1.21)	5.79	(0.54)	13.29	(1.23)	48 1/2"	(1232)	32.42	(3.01)
11036◊	7.89	(0.73)	29 7/8"	(759)	38"	(965)	29.60	(2.75)	15.64	(1.45)	6.98	(0.65)	15.78	(1.47)	42 1/2"	(1080)	37.90	(3.52)
11040◊	9.14	(0.85)	29 7/8"	(759)	44"	(1118)	34.64	(3.22)	18.30	(1.70)	8.17	(0.76)	18.27	(1.70)	36 1/2"	(927)	43.38	(4.03)
11046◊	10.38	(0.96)	29 7/8"	(759)	50"	(1270)	39.68	(3.69)	20.96	(1.95)	9.36	(0.87)	20.76	(1.93)	30 1/2"	(775)	48.86	(4.54)
11050◊	11.63	(1.08)	29 7/8"	(759)	56"	(1422)	44.72	(4.15)	23.62	(2.19)	10.55	(0.98)	23.25	(2.16)	24 1/2"	(622)	54.34	(5.05)
11056◊	12.87	(1.20)	29 7/8"	(759)	62"	(1575)	49.76	(4.62)	26.28	(2.44)	11.74	(1.09)	25.75	(2.39)	18 1/2"	(470)	59.81	(5.56)
11060◊	14.12	(1.31)	29 7/8"	(759)	68"	(1727)	54.80	(5.09)	28.95	(2.69)	12.92	(1.20)	28.24	(2.62)	12 1/2"	(318)	65.29	(6.07)
12016	3.20	(0.30)	32 7/8"	(836)	14"	(356)	10.39	(0.96)	5.46	(0.51)	2.46	(0.23)	6.40	(0.59)	66 1/2"	(1689)	17.44	(1.62)
12020	4.57	(0.42)	32 7/8"	(836)	20"	(508)	15.92	(1.48)	8.37	(0.78)	3.78	(0.35)	9.14	(0.85)	60 1/2"	(1537)	23.42	(2.18)
12026◊	5.94	(0.55)	32 7/8"	(836)	26"	(660)	21.46	(1.99)	11.28	(1.05)	5.09	(0.47)	11.88	(1.10)	54 1/2"	(1384)	29.40	(2.73)
12030◊	7.31	(0.68)	32 7/8"	(836)	32"	(813)	27.00	(2.51)	14.19	(1.32)	6.40	(0.59)	14.62	(1.36)	48 1/2"	(1232)	35.38	(3.29)
12036◊	8.68	(0.81)	32 7/8"	(836)	38"	(965)	32.54	(3.02)	17.11	(1.59)	7.72	(0.72)	17.36	(1.61)	42 1/2"	(1080)	41.36	(3.84)
12040◊	10.05	(0.93)	32 7/8"	(836)	44"	(1118)	38.08	(3.54)	20.02	(1.86)	9.03	(0.84)	20.10	(1.87)	36 1/2"	(927)	47.34	(4.40)
12046◊	11.42	(1.06)	32 7/8"	(836)	50"	(1270)	43.62	(4.05)	22.93	(2.13)	10.34	(0.96)	22.85	(2.12)	30 1/2"	(775)	53.31	(4.95)
12050◊	12.79	(1.19)	32 7/8"	(836)	56"	(1422)	49.16	(4.57)	25.84	(2.40)	11.66	(1.08)	25.59	(2.38)	24 1/2"	(622)	59.29	(5.51)
12056◊	14.16	(1.32)	32 7/8"	(836)	62"	(1575)	54.70	(5.08)	28.75	(2.67)	12.97	(1.21)	28.33	(2.63)	18 1/2"	(470)	65.27	(6.06)
12060◊	15.54	(1.44)	32 7/8"	(836)	68"	(1727)	60.23	(5.60)	31.67	(2.94)	14.28	(1.33)	31.07	(2.89)	12 1/2"	(318)	71.25	(6.62)

• Top of Subfloor to Top of Inside Sill Stop is calculated based upon a structural header height of 6'-10 1/2" (2096).
• Dimensions in parentheses are in millimeters or square meters.
◊ Meets or exceeds clear opening area of 5.7 sq.ft. or 0.53 m², clear opening width of 20" (508) and clear opening height of 24" (610).

Gliding Active-Stationary-Active 1:1:1 Sash Ratio Window Opening and Area Specification

Window Number	Clear Opening Area Sq. Ft./(m²)	Clear Opening in Full Open Position Width Inches/(mm)	Clear Opening in Full Open Position Height Inches/(mm)	Total Glass Area Sq. Ft./(m²)	Fixed Sash Glass Area Sq. Ft./(m²)	Single Active Sash Glass Area Sq. Ft./(m²)	Vent Area Sq. Ft./(m²)	Top of Subfloor to Top of Inside Sill Stop Inches/(mm)	Overall Window Area Sq. Ft./(m²)
4016	1.04 (0.10)	10 5/8" (271)	14" (356)	2.89 (0.27)	0.96 (0.09)	0.96 (0.09)	2.07 (0.19)	66 1/2" (1689)	5.77 (0.54)
4020	1.48 (0.14)	10 5/8" (271)	20" (508)	4.42 (0.41)	1.48 (0.14)	1.47 (0.14)	2.96 (0.28)	60 1/2" (1537)	7.75 (0.72)
4026	1.93 (0.18)	10 5/8" (271)	26" (660)	5.96 (0.55)	1.99 (0.19)	1.99 (0.18)	3.85 (0.36)	54 1/2" (1384)	9.73 (0.90)
4030	2.37 (0.22)	10 5/8" (271)	32" (813)	7.50 (0.70)	2.51 (0.23)	2.50 (0.23)	4.74 (0.44)	48 1/2" (1232)	11.71 (1.09)
4036	2.82 (0.26)	10 5/8" (271)	38" (965)	9.04 (0.84)	3.02 (0.28)	3.01 (0.28)	5.63 (0.52)	42 1/2" (1080)	13.69 (1.27)
4040	3.26 (0.30)	10 5/8" (271)	44" (1118)	10.58 (0.98)	3.53 (0.33)	3.52 (0.33)	6.52 (0.61)	36 1/2" (927)	15.67 (1.46)
4046	3.70 (0.34)	10 5/8" (271)	50" (1270)	12.12 (1.13)	4.05 (0.38)	4.03 (0.37)	7.41 (0.69)	30 1/2" (775)	17.65 (1.64)
4050	4.15 (0.39)	10 5/8" (271)	56" (1422)	13.66 (1.27)	4.56 (0.42)	4.55 (0.42)	8.30 (0.77)	24 1/2" (622)	19.63 (1.82)
4056	4.59 (0.43)	10 5/8" (271)	62" (1575)	15.20 (1.41)	5.08 (0.47)	5.06 (0.47)	9.19 (0.85)	18 1/2" (470)	21.61 (2.01)
4060	5.04 (0.47)	10 5/8" (271)	68" (1727)	16.73 (1.55)	5.59 (0.52)	5.57 (0.52)	10.08 (0.94)	12 1/2" (318)	23.59 (2.19)
5016	1.43 (0.13)	14 5/8" (373)	14" (356)	3.82 (0.36)	1.28 (0.12)	1.27 (0.12)	2.85 (0.26)	66 1/2" (1689)	7.23 (0.67)
5020	2.04 (0.19)	14 5/8" (373)	20" (508)	5.86 (0.54)	1.96 (0.18)	1.95 (0.18)	4.07 (0.38)	60 1/2" (1537)	9.71 (0.90)
5026	2.65 (0.25)	14 5/8" (373)	26" (660)	7.90 (0.73)	2.64 (0.25)	2.63 (0.24)	5.30 (0.49)	54 1/2" (1384)	12.19 (1.13)
5030	3.26 (0.30)	14 5/8" (373)	32" (813)	9.94 (0.92)	3.32 (0.31)	3.31 (0.31)	6.52 (0.61)	48 1/2" (1232)	14.67 (1.36)
5036	3.87 (0.36)	14 5/8" (373)	38" (965)	11.98 (1.11)	4.00 (0.37)	3.99 (0.37)	7.74 (0.72)	42 1/2" (1080)	17.15 (1.59)
5040	4.48 (0.42)	14 5/8" (373)	44" (1118)	14.02 (1.30)	4.68 (0.43)	4.67 (0.43)	8.96 (0.83)	36 1/2" (927)	19.63 (1.82)
5046	5.09 (0.47)	14 5/8" (373)	50" (1270)	16.06 (1.49)	5.36 (0.50)	5.35 (0.50)	10.19 (0.95)	30 1/2" (775)	22.11 (2.05)
5050	5.70 (0.53)	14 5/8" (373)	56" (1422)	18.09 (1.68)	6.04 (0.56)	6.03 (0.56)	11.41 (1.06)	24 1/2" (622)	24.59 (2.28)
5056	6.32 (0.59)	14 5/8" (373)	62" (1575)	20.13 (1.87)	6.72 (0.62)	6.71 (0.62)	12.63 (1.17)	18 1/2" (470)	27.06 (2.51)
5060	6.93 (0.64)	14 5/8" (373)	68" (1727)	22.17 (2.06)	7.40 (0.69)	7.38 (0.69)	13.85 (1.29)	12 1/2" (318)	29.54 (2.74)
6016	1.82 (0.17)	18 5/8" (474)	14" (356)	4.76 (0.44)	1.59 (0.15)	1.59 (0.15)	3.63 (0.34)	66 1/2" (1689)	8.69 (0.81)
6020	2.59 (0.24)	18 5/8" (474)	20" (508)	7.30 (0.68)	2.44 (0.23)	2.43 (0.23)	5.19 (0.48)	60 1/2" (1537)	11.67 (1.08)
6026	3.37 (0.31)	18 5/8" (474)	26" (660)	9.84 (0.91)	3.28 (0.31)	3.28 (0.30)	6.74 (0.63)	54 1/2" (1384)	14.65 (1.36)
6030	4.15 (0.39)	18 5/8" (474)	32" (813)	12.38 (1.15)	4.13 (0.38)	4.12 (0.38)	8.30 (0.77)	48 1/2" (1232)	17.63 (1.64)
6036	4.93 (0.46)	18 5/8" (474)	38" (965)	14.92 (1.39)	4.98 (0.46)	4.97 (0.46)	9.85 (0.92)	42 1/2" (1080)	20.61 (1.91)
6040	5.70 (0.53)	18 5/8" (474)	44" (1118)	17.45 (1.62)	5.83 (0.54)	5.81 (0.54)	11.41 (1.06)	36 1/2" (927)	23.59 (2.19)
6046	6.48 (0.60)	18 5/8" (474)	50" (1270)	19.99 (1.86)	6.67 (0.62)	6.66 (0.62)	12.96 (1.20)	30 1/2" (775)	26.56 (2.47)
6050	7.26 (0.67)	18 5/8" (474)	56" (1422)	22.53 (2.09)	7.52 (0.70)	7.51 (0.70)	14.52 (1.35)	24 1/2" (622)	29.54 (2.74)
6056	8.04 (0.75)	18 5/8" (474)	62" (1575)	25.07 (2.33)	8.37 (0.78)	8.35 (0.78)	16.08 (1.49)	18 1/2" (470)	32.52 (3.02)
6060	8.82 (0.82)	18 5/8" (474)	68" (1727)	27.61 (2.56)	9.22 (0.86)	9.20 (0.85)	17.63 (1.64)	12 1/2" (318)	35.50 (3.30)
7016	2.20 (0.20)	22 5/8" (576)	14" (356)	5.70 (0.53)	1.90 (0.18)	1.90 (0.18)	4.41 (0.41)	66 1/2" (1689)	10.15 (0.94)
7020	3.15 (0.29)	22 5/8" (576)	20" (508)	8.74 (0.81)	2.92 (0.27)	2.91 (0.27)	6.30 (0.59)	60 1/2" (1537)	13.63 (1.27)
7026	4.09 (0.38)	22 5/8" (576)	26" (660)	11.78 (1.09)	3.93 (0.37)	3.92 (0.36)	8.19 (0.76)	54 1/2" (1384)	17.11 (1.59)
7030	5.04 (0.47)	22 5/8" (576)	32" (813)	14.81 (1.38)	4.94 (0.46)	4.94 (0.46)	10.08 (0.94)	48 1/2" (1232)	20.59 (1.91)
7036 ◊	5.98 (0.56)	22 5/8" (576)	38" (965)	17.85 (1.66)	5.96 (0.55)	5.95 (0.55)	11.96 (1.11)	42 1/2" (1080)	24.06 (2.24)
7040 ◊	6.93 (0.64)	22 5/8" (576)	44" (1118)	20.89 (1.94)	6.97 (0.65)	6.96 (0.65)	13.85 (1.29)	36 1/2" (927)	27.54 (2.56)
7046 ◊	7.87 (0.73)	22 5/8" (576)	50" (1270)	23.93 (2.22)	7.99 (0.74)	7.97 (0.74)	15.74 (1.46)	30 1/2" (775)	31.02 (2.88)
7050 ◊	8.82 (0.82)	22 5/8" (576)	56" (1422)	26.97 (2.51)	9.00 (0.84)	8.98 (0.83)	17.63 (1.64)	24 1/2" (622)	34.50 (3.21)
7056 ◊	9.76 (0.91)	22 5/8" (576)	62" (1575)	30.01 (2.79)	10.01 (0.93)	10.00 (0.93)	19.52 (1.81)	18 1/2" (470)	37.98 (3.53)
7060 ◊	10.70 (0.99)	22 5/8" (576)	68" (1727)	33.05 (3.07)	11.03 (1.02)	11.01 (1.02)	21.41 (1.99)	12 1/2" (318)	41.46 (3.85)
7616	2.40 (0.22)	24 5/8" (627)	14" (356)	6.17 (0.57)	2.06 (0.19)	2.05 (0.19)	4.80 (0.45)	66 1/2" (1689)	10.88 (1.01)
7620	3.43 (0.32)	24 5/8" (627)	20" (508)	9.46 (0.88)	3.15 (0.29)	3.15 (0.29)	6.85 (0.64)	60 1/2" (1537)	14.61 (1.36)
7626	4.45 (0.41)	24 5/8" (627)	26" (660)	12.74 (1.18)	4.25 (0.40)	4.25 (0.39)	8.91 (0.83)	54 1/2" (1384)	18.34 (1.70)
7630	5.48 (0.51)	24 5/8" (627)	32" (813)	16.03 (1.49)	5.35 (0.50)	5.34 (0.50)	10.96 (1.02)	48 1/2" (1232)	22.06 (2.05)
7636 ◊	6.51 (0.60)	24 5/8" (627)	38" (965)	19.32 (1.80)	6.45 (0.60)	6.44 (0.60)	13.02 (1.21)	42 1/2" (1080)	25.79 (2.40)
7640 ◊	7.54 (0.70)	24 5/8" (627)	44" (1118)	22.61 (2.10)	7.54 (0.70)	7.53 (0.70)	15.08 (1.40)	36 1/2" (927)	29.52 (2.74)
7646 ◊	8.57 (0.80)	24 5/8" (627)	50" (1270)	25.90 (2.41)	8.64 (0.80)	8.63 (0.80)	17.13 (1.59)	30 1/2" (775)	33.25 (3.09)
7650 ◊	9.59 (0.89)	24 5/8" (627)	56" (1422)	29.19 (2.71)	9.74 (0.90)	9.72 (0.90)	19.19 (1.78)	24 1/2" (622)	36.98 (3.44)
7656 ◊	10.62 (0.99)	24 5/8" (627)	62" (1575)	32.48 (3.02)	10.84 (1.01)	10.82 (1.01)	21.24 (1.97)	18 1/2" (470)	40.71 (3.78)
7660 ◊	11.65 (1.08)	24 5/8" (627)	68" (1727)	35.77 (3.32)	11.93 (1.11)	11.92 (1.11)	23.30 (2.16)	12 1/2" (318)	44.44 (4.13)
8016	2.59 (0.24)	26 5/8" (677)	14" (356)	6.64 (0.62)	2.21 (0.21)	2.21 (0.21)	5.19 (0.48)	66 1/2" (1689)	11.61 (1.08)
8020	3.70 (0.34)	26 5/8" (677)	20" (508)	10.17 (0.95)	3.39 (0.32)	3.39 (0.31)	7.41 (0.69)	60 1/2" (1537)	15.59 (1.45)
8026	4.82 (0.45)	26 5/8" (677)	26" (660)	13.71 (1.27)	4.58 (0.43)	4.57 (0.42)	9.63 (0.89)	54 1/2" (1384)	19.56 (1.82)
8030 ◊	5.93 (0.55)	26 5/8" (677)	32" (813)	17.25 (1.60)	5.76 (0.53)	5.75 (0.53)	11.85 (1.10)	48 1/2" (1232)	23.54 (2.19)
8036 ◊	7.04 (0.65)	26 5/8" (677)	38" (965)	20.79 (1.93)	6.94 (0.64)	6.93 (0.64)	14.08 (1.31)	42 1/2" (1080)	27.52 (2.56)
8040 ◊	8.15 (0.76)	26 5/8" (677)	44" (1118)	24.33 (2.26)	8.12 (0.75)	8.11 (0.75)	16.30 (1.51)	36 1/2" (927)	31.50 (2.93)
8046 ◊	9.26 (0.86)	26 5/8" (677)	50" (1270)	27.87 (2.59)	9.30 (0.86)	9.28 (0.86)	18.52 (1.72)	30 1/2" (775)	35.48 (3.30)
8050 ◊	10.37 (0.96)	26 5/8" (677)	56" (1422)	31.41 (2.92)	10.48 (0.97)	10.46 (0.97)	20.74 (1.93)	24 1/2" (622)	39.46 (3.67)

• Top of Subfloor to Top of Inside Sill Stop is calculated based upon a structural header height of 6'-10 1/2" (2096).
• Dimensions in parentheses are in millimeters or square meters.
◊ Meets or exceeds clear opening area of 5.7 sq.ft. or 0.53 m², clear opening width of 20" (508) and clear opening height of 24" (610).

continued on next page

Gliding Active-Stationary-Active 1:1:1 Sash Ratio Window Opening and Area Specification *(continued)*

Window Number	Clear Opening Area Sq. Ft./(m²)		Clear Opening in Full Open Position Width Inches/(mm)		Clear Opening in Full Open Position Height Inches/(mm)		Total Glass Area Sq. Ft./(m²)		Fixed Sash Glass Area Sq. Ft./(m²)		Single Active Sash Glass Area Sq. Ft./(m²)		Vent Area Sq. Ft./(m²)		Top of Subfloor to Top of Inside Sill Stop Inches/(mm)		Overall Window Area Sq. Ft./(m²)	
8056 ◊	11.48	(1.07)	26 5/8"	(677)	62"	(1575)	34.95	(3.25)	11.66	(1.08)	11.64	(1.08)	22.97	(2.13)	18 1/2"	(470)	43.44	(4.04)
8060 ◊	12.59	(1.17)	26 5/8"	(677)	68"	(1727)	38.48	(3.58)	12.84	(1.19)	12.82	(1.19)	25.19	(2.34)	12 1/2"	(318)	47.42	(4.41)
8616	2.79	(0.26)	28 5/8"	(728)	14"	(356)	7.10	(0.66)	2.37	(0.22)	2.37	(0.22)	5.57	(0.52)	66 1/2"	(1689)	12.34	(1.15)
8620	3.98	(0.37)	28 5/8"	(728)	20"	(508)	10.89	(1.01)	3.63	(0.34)	3.63	(0.34)	7.96	(0.74)	60 1/2"	(1537)	16.56	(1.54)
8626	5.18	(0.48)	28 5/8"	(728)	26"	(660)	14.68	(1.36)	4.90	(0.46)	4.89	(0.45)	10.35	(0.96)	54 1/2"	(1384)	20.79	(1.93)
8630 ◊	6.37	(0.59)	28 5/8"	(728)	32"	(813)	18.47	(1.72)	6.16	(0.57)	6.15	(0.57)	12.74	(1.18)	48 1/2"	(1232)	25.02	(2.32)
8636 ◊	7.57	(0.70)	28 5/8"	(728)	38"	(965)	22.26	(2.07)	7.43	(0.69)	7.42	(0.69)	15.13	(1.41)	42 1/2"	(1080)	29.25	(2.72)
8640 ◊	8.76	(0.81)	28 5/8"	(728)	44"	(1118)	26.05	(2.42)	8.69	(0.81)	8.68	(0.81)	17.52	(1.63)	36 1/2"	(927)	33.48	(3.11)
8646 ◊	9.95	(0.92)	28 5/8"	(728)	50"	(1270)	29.84	(2.77)	9.95	(0.92)	9.94	(0.92)	19.91	(1.85)	30 1/2"	(775)	37.71	(3.50)
8650 ◊	11.15	(1.04)	28 5/8"	(728)	56"	(1422)	33.63	(3.12)	11.22	(1.04)	11.20	(1.04)	22.30	(2.07)	24 1/2"	(622)	41.94	(3.90)
8656 ◊	12.34	(1.15)	28 5/8"	(728)	62"	(1575)	37.41	(3.48)	12.48	(1.16)	12.47	(1.16)	24.69	(2.29)	18 1/2"	(470)	46.17	(4.29)
8660 ◊	13.54	(1.26)	28 5/8"	(728)	68"	(1727)	41.20	(3.83)	13.75	(1.28)	13.73	(1.28)	27.08	(2.52)	12 1/2"	(318)	50.40	(4.68)

• Top of Subfloor to Top of Inside Sill Stop is calculated based upon a structural header height of 6'-10 1/2" (2096).
• Dimensions in parentheses are in millimeters or square meters.
◊ Meets or exceeds clear opening area of 5.7 sq. ft. or 0.53 m², clear opening width of 20" (508) and clear opening height of 24" (610).

Grille Patterns

	Prairie A	Colonial	Modified Colonial	Tall Fractional	Short Fractional
Gliding		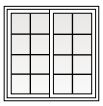			

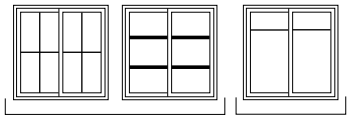

Specified Equal Light Examples Custom Example

Number of lights and overall pattern varies with window size. Patterns may not be available in all configurations or sizes. Specified equal light and custom patterns are also available. For specified equal light, specify number of same-size rectangles across or down. For more grille options, see page 14 or visit **andersenwindows.com/grilles**.

Gliding Window Details – New Construction

Scale 1 1/2" (38) = 1'-0" (305) – 1:8

1 3/8" Flange Setback

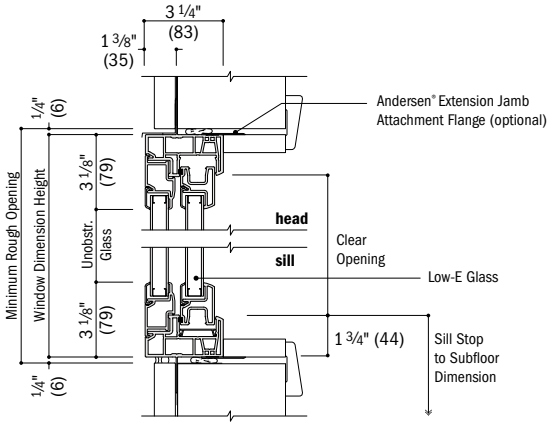

Vertical Section

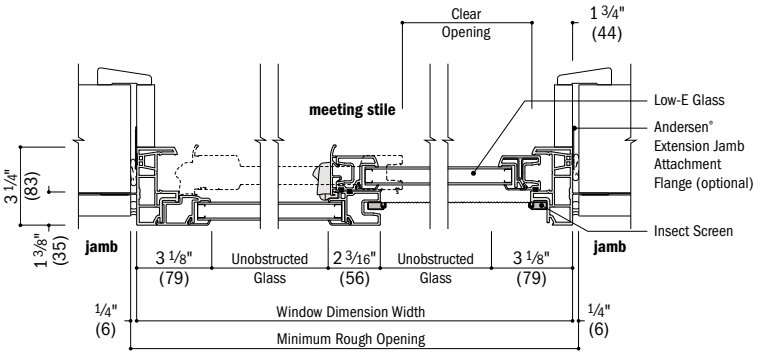

Horizontal Section

1" Flange Setback With Stucco Key

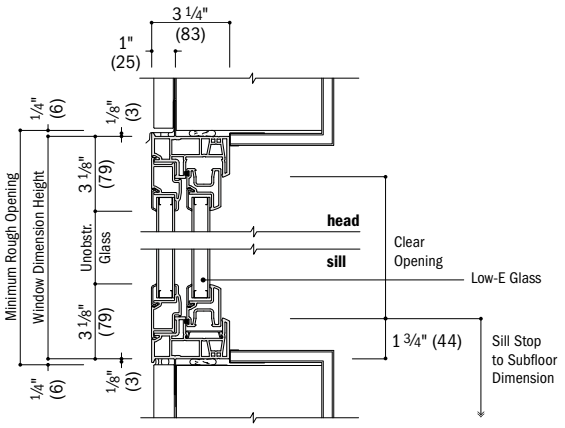

Vertical Section
Stucco Exterior

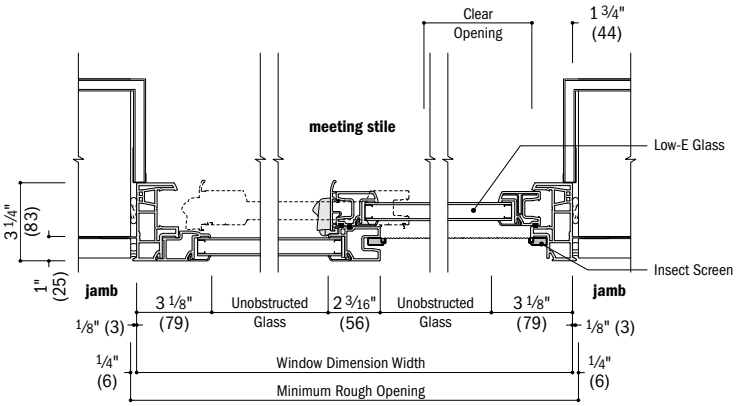

Horizontal Section
Stucco Exterior

Integral

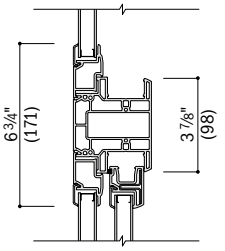

Vertical Section
Picture Over Gliding

See pages 88-93 for joining details.

- Light-colored areas are parts included with window. Dark-colored areas are additional Andersen® parts required to complete window assembly as shown.
- **Minimum rough openings may need to be increased to allow for use of building wraps, flashing, sill panning, brackets, fasteners or other items. See installation information on page 121.**
- Drip cap is required to complete window installation as shown but may not be included with window. Use of drip cap is recommended for proper installation.
- Details are for illustration only and are not intended to represent product installation methods or materials. Refer to product installation instructions at andersenwindows.com.
- Dimensions in parentheses are in millimeters.

Gliding Window Details – Replacement

Scale 1 1/2" (38) = 1'-0" (305) – 1:8

No Flange

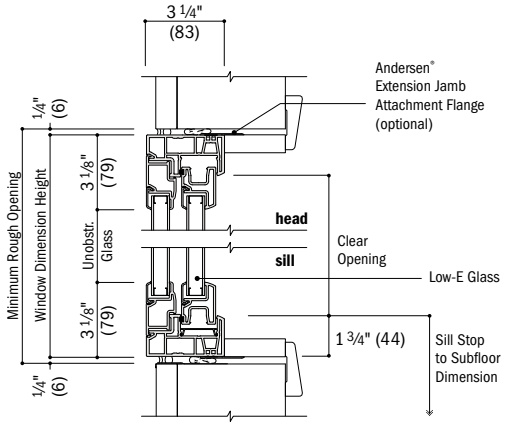

Vertical Section
Existing Framed Opening

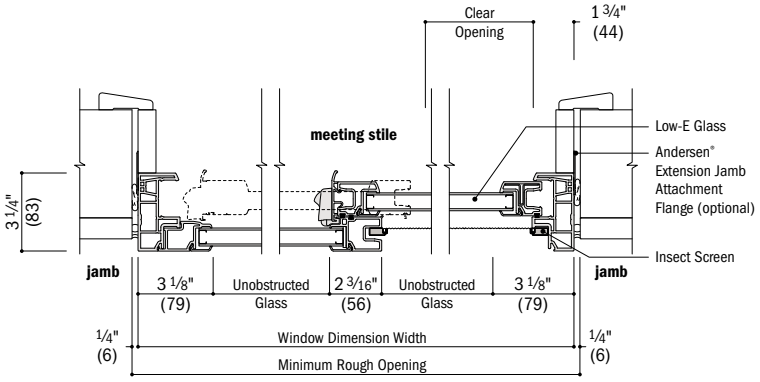

Horizontal Section
Existing Framed Opening

Insert

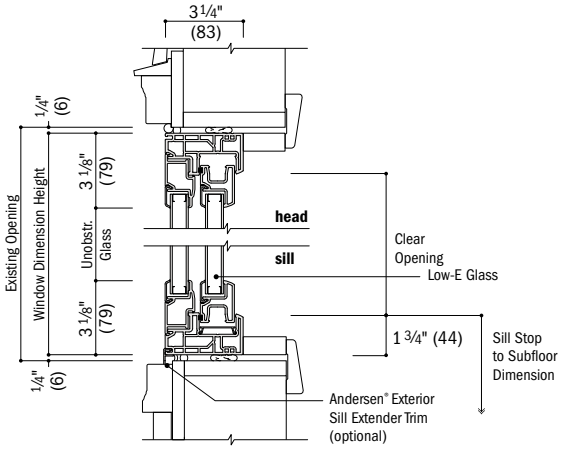

Vertical Section
Existing Window Opening

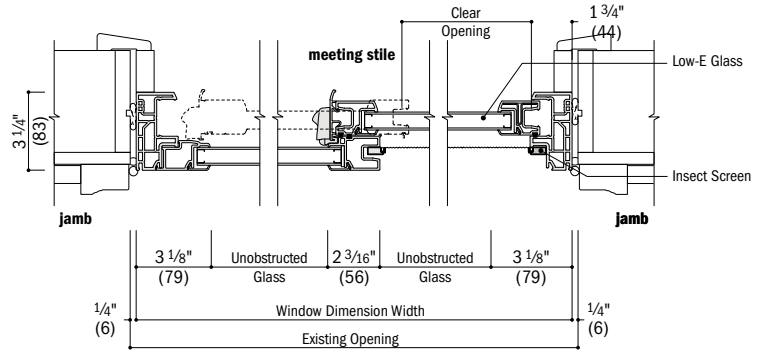

Horizontal Section
Existing Window Opening

Flush Fin*

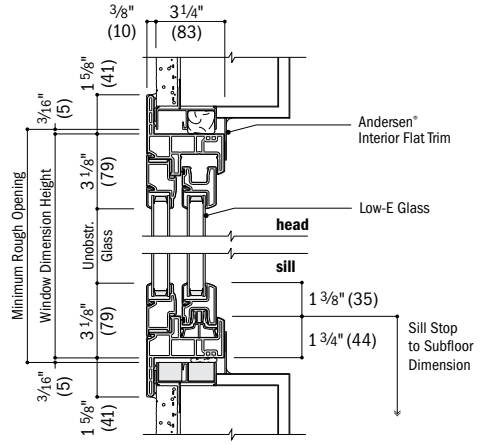

Vertical Section
Existing Aluminum Frame Window Opening

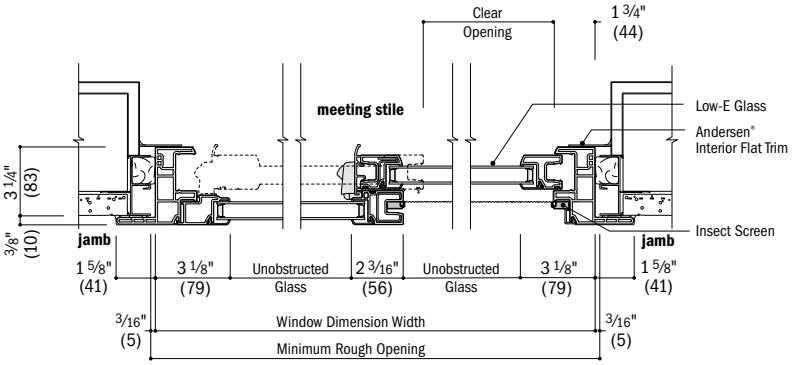

Horizontal Section
Existing Aluminum Frame Window Opening

Integral detail shown on previous page. Installation accessories are available for insert and flush fin frames; see page 120. **See pages 88-93 for joining details.**

- Light-colored areas are parts included with window. Dark-colored areas are additional Andersen® parts required to complete window assembly as shown.
- **Minimum rough openings may need to be increased to allow for use of building wraps, flashing, sill panning, brackets, fasteners or other items. See installation information on page 121.**
- Details are for illustration only and are not intended to represent product installation methods or materials. Refer to product installation instructions at andersenwindows.com.
- Dimensions in parentheses are in millimeters.

*Windows with flush fin frame are available in select Southwestern states including Arizona, California, Nevada, New Mexico and Utah. Limited configuration availability. See your Andersen supplier for more information.

Table of Picture and Transom Window Sizes

Scale 1/8" (3) = 1'-0" (305) – 1:96

Notes on next page also apply to this page.

Window Dimension	11 1/2" (292)	1'-5 1/2" (445)	1'-11 1/2" (597)	2'-5 1/2" (749)	2'-11 1/2" (902)	3'-5 1/2" (1054)	3'-11 1/2" (1207)	4'-5 1/2" (1359)	4'-11 1/2" (1511)	5'-5 1/2" (1664)
Minimum Rough Opening	1'-0" (305)	1'-6" (457)	2'-0" (610)	2'-6" (762)	3'-0" (914)	3'-6" (1067)	4'-0" (1219)	4'-6" (1372)	5'-0" (1524)	5'-6" (1676)
Unobstructed Glass	5 1/4" (133)	11 1/4" (286)	17 1/4" (438)	23 1/4" (591)	29 1/4" (743)	35 1/4" (895)	41 1/4" (1048)	47 1/4" (1200)	53 1/4" (1353)	59 1/4" (1505)

CUSTOM WIDTHS – 11 1/2" to 95 1/2"

CUSTOM HEIGHTS – 11 1/2" to 95 1/2"

11 1/2" (292) 1'-0" (305) 5 1/4" (591)	1010	1610	2010	2610	3010	3610	4010	4610	5010	5610
1'-5 1/2" (445) 1'-6" (457) 11 1/4" (286)	1016	1616	2016	2616	3016	3616	4016	4616	5016	5616
1'-11 1/2" (597) 2'-0" (610) 17 1/4" (438)	1020	1620	2020	2620	3020	3620	4020	4620	5020	5620
2'-5 1/2" (749) 2'-6" (762) 23 1/4" (591)	1026	1626	2026	2626	3026	3626	4026	4626	5026	5626
2'-11 1/2" (902) 3'-0" (914) 29 1/4" (743)	1030	1630	2030	2630	3030	3630	4030	4630	5030	5630
3'-5 1/2" (1054) 3'-6" (1067) 35 1/4" (895)	1036	1636	2036	2636	3036	3636	4036	4636	5036	5636
3'-11 1/2" (1207) 4'-0" (1219) 41 1/4" (1048)	1040	1640	2040	2640	3040	3640	4040	4640	5040	5640
4'-5 1/2" (1359) 4'-6" (1372) 47 1/4" (1200)	1046	1646	2046	2646	3046	3646	4046	4646	5046	5646
4'-11 1/2" (1511) 5'-0" (1524) 53 1/4" (1353)	1050	1650	2050	2650	3050	3650	4050	4650	5050	5650
5'-5 1/2" (1664) 5'-6" (1676) 59 1/4" (1505)	1056	1656	2056	2656	3056	3656	4056	4656	5056	5656
5'-11 1/2" (1816) 6'-0" (1829) 65 1/4" (1657)	1060	1660	2060	2660	3060	3660	4060	4660	5060	5660
6'-5 1/2" (1969) 6'-6" (1981) 71 1/4" (1810)	1066	1666	2066	2666	3066	3666	4066	4666	5066	5666

- Window Dimension always refers to outside frame-to-frame dimension.
- **Minimum Rough Opening dimensions may need to be increased to allow for use of building wraps, flashing, sill panning, brackets, fasteners or other items. See page 121 for more details.**
- Dimensions in parentheses are in millimeters.

5'-11 1/2" (1816)	6'-5 1/2" (1969)	6'-11 1/2" (2121)	7'-5 1/2" (2273)	7'-11 1/2" (2426)
6'-0" (1829)	6'-6" (1981)	7'-0" (2134)	7'-6" (2286)	8'-0" (2438)
65 1/4" (1657)	71 1/4" (1810)	77 1/4" (1962)	83 1/4" (2115)	89 1/4" (2267)

continued on next page

Custom-size windows are available in 1/8" (3) increments. See page 98 for custom sizes and specifications.

Grille patterns shown on page 79.

Details shown on pages 83-86.

- Window Dimension always refers to outside frame-to-frame dimension.
- **Minimum Rough Opening dimensions may need to be increased to allow for use of building wraps, flashing, sill panning, brackets, fasteners or other items. See page 121 for more details.**
- Dimensions in parentheses are in millimeters.

Table of Picture and Transom Window Sizes *(continued)*

Notes on next page also apply to this page.

Scale 1/8" (3) = 1'-0" (305) – 1:96

Window Dimension	11 1/2" (292)	1'-5 1/2" (445)	1'-11 1/2" (597)	2'-5 1/2" (749)	2'-11 1/2" (902)	3'-5 1/2" (1054)	3'-11 1/2" (1207)	4'-5 1/2" (1359)	4'-11 1/2" (1511)	5'-5 1/2" (1664)
Minimum Rough Opening	1'-0" (305)	1'-6" (457)	2'-0" (610)	2'-6" (762)	3'-0" (914)	3'-6" (1067)	4'-0" (1219)	4'-6" (1372)	5'-0" (1524)	5'-6" (1676)
Unobstructed Glass	5 1/4" (133)	11 1/4" (286)	17 1/4" (438)	23 1/4" (591)	29 1/4" (743)	35 1/4" (895)	41 1/4" (1048)	47 1/4" (1200)	53 1/4" (1353)	59 1/4" (1505)

CUSTOM WIDTHS – 11 1/2" to 95 1/2"

CUSTOM HEIGHTS – 11 1/2" to 95 1/2"

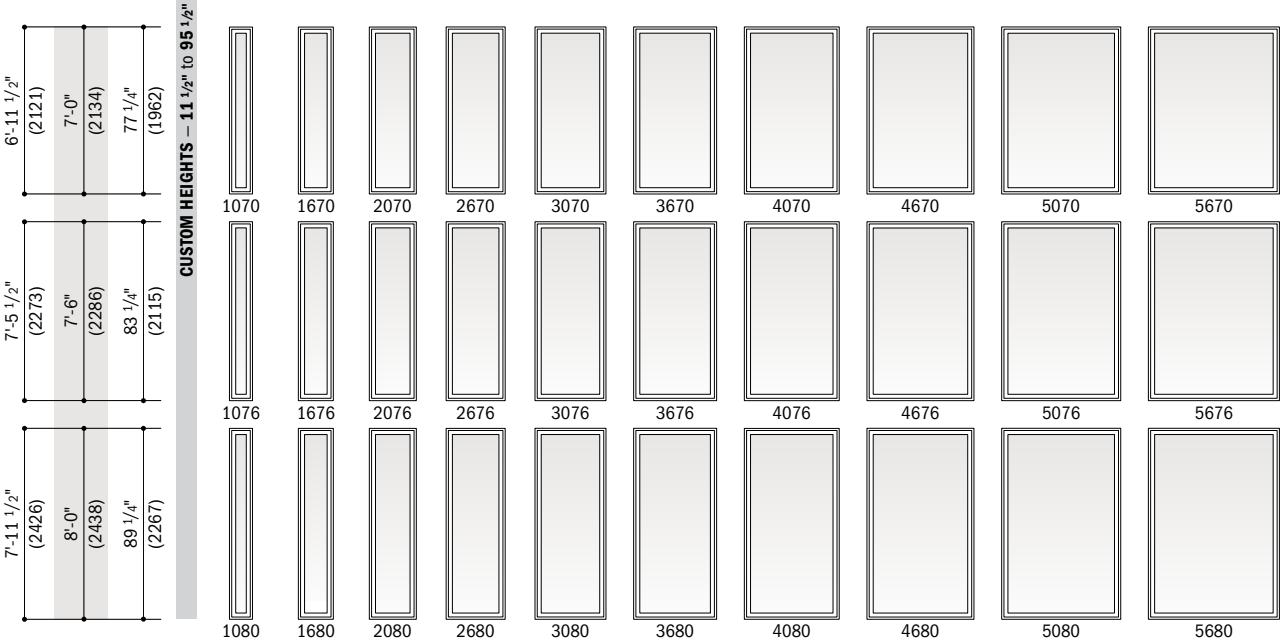

- Window Dimension always refers to outside frame-to-frame dimension.
- **Minimum Rough Opening dimensions may need to be increased to allow for use of building wraps, flashing, sill panning, brackets, fasteners or other items. See page 121 for more details.**
- Dimensions in parentheses are in millimeters.

Picture and Transom Window Area Specifications

Window Number	Glass Area Sq. Ft./(m²)	Overall Window Area Sq. Ft./(m²)
1010	0.19 (0.02)	0.92 (0.09)
1016	0.41 (0.04)	1.40 (0.13)
1020	0.63 (0.06)	1.88 (0.17)
1026	0.85 (0.08)	2.36 (0.22)
1030	1.07 (0.10)	2.84 (0.26)
1036	1.29 (0.12)	3.31 (0.31)
1040	1.50 (0.14)	3.79 (0.35)
1046	1.72 (0.16)	4.27 (0.40)
1050	1.94 (0.18)	4.75 (0.44)
1056	2.16 (0.20)	5.23 (0.49)
1060	2.38 (0.22)	5.71 (0.53)
1066	2.60 (0.24)	6.19 (0.57)
1070	2.82 (0.26)	6.67 (0.62)
1076	3.04 (0.28)	7.15 (0.66)
1080	3.25 (0.30)	7.63 (0.71)
1610	0.41 (0.04)	1.40 (0.13)
1616	0.88 (0.08)	2.13 (0.20)
1620	1.35 (0.13)	2.86 (0.27)
1626	1.82 (0.17)	3.59 (0.33)
1630	2.29 (0.21)	4.31 (0.40)
1636	2.75 (0.26)	5.04 (0.47)
1640	3.22 (0.30)	5.77 (0.54)
1646	3.69 (0.34)	6.50 (0.60)

Window Number	Glass Area Sq. Ft./(m²)	Overall Window Area Sq. Ft./(m²)
1650	4.16 (0.39)	7.23 (0.67)
1656	4.63 (0.43)	7.96 (0.74)
1660	5.10 (0.47)	8.69 (0.81)
1666	5.57 (0.52)	9.42 (0.87)
1670	6.04 (0.56)	10.15 (0.94)
1676	6.50 (0.60)	10.88 (1.01)
1680	6.97 (0.65)	11.61 (1.08)
2010	0.63 (0.06)	1.88 (0.17)
2016	1.35 (0.13)	2.86 (0.27)
2020	2.07 (0.19)	3.84 (0.36)
2026	2.79 (0.26)	4.81 (0.45)
2030	3.50 (0.33)	5.79 (0.54)
2036	4.22 (0.39)	6.77 (0.63)
2040	4.94 (0.46)	7.75 (0.72)
2046	5.66 (0.53)	8.73 (0.81)
2050	6.38 (0.59)	9.71 (0.90)
2056	7.10 (0.66)	10.69 (0.99)
2060	7.82 (0.73)	11.67 (1.08)
2066	8.54 (0.79)	12.65 (1.17)
2070	9.25 (0.86)	13.63 (1.27)
2076	9.97 (0.93)	14.61 (1.36)
2080	10.69 (0.99)	15.59 (1.45)
2610	0.85 (0.08)	2.36 (0.22)

Window Number	Glass Area Sq. Ft./(m²)	Overall Window Area Sq. Ft./(m²)
2616	1.82 (0.17)	3.59 (0.33)
2620	2.79 (0.26)	4.81 (0.45)
2626	3.75 (0.35)	6.04 (0.56)
2630	4.72 (0.44)	7.27 (0.68)
2636	5.69 (0.53)	8.50 (0.79)
2640	6.66 (0.62)	9.73 (0.90)
2646	7.63 (0.71)	10.96 (1.02)
2650	8.60 (0.80)	12.19 (1.13)
2656	9.57 (0.89)	13.42 (1.25)
2660	10.54 (0.98)	14.65 (1.36)
2666	11.50 (1.07)	15.88 (1.47)
2670	12.47 (1.16)	17.11 (1.59)
2676	13.44 (1.25)	18.34 (1.70)
2680	14.41 (1.34)	19.56 (1.82)
3010	1.07 (0.10)	2.84 (0.26)
3016	2.29 (0.21)	4.31 (0.40)
3020	3.50 (0.33)	5.79 (0.54)
3026	4.72 (0.44)	7.27 (0.68)
3030	5.94 (0.55)	8.75 (0.81)
3036	7.16 (0.67)	10.23 (0.95)
3040	8.38 (0.78)	11.71 (1.09)

- Dimensions in parentheses are in square meters.

continued on next page

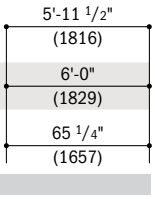

Custom-size windows are available in 1/8" (3) increments. See page 98 for custom sizes and specifications.

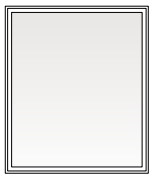
6070

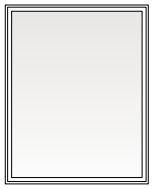
6076

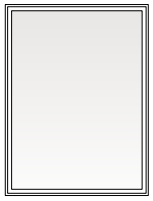
6080

Grille patterns shown on page 79. Details shown on pages 83-86.

- Window Dimension always refers to outside frame-to-frame dimension.
- **Minimum Rough Opening dimensions may need to be increased to allow for use of building wraps, flashing, sill panning, brackets, fasteners or other items. See page 121 for more details.**
- Dimensions in parentheses are in millimeters.

Picture and Transom Window Area Specifications *(continued)*

Window Number	Glass Area Sq. Ft./(m²)		Overall Window Area Sq. Ft./(m²)	
3046	9.60	(0.89)	13.19	(1.23)
3050	10.82	(1.00)	14.67	(1.36)
3056	12.04	(1.12)	16.15	(1.50)
3060	13.25	(1.23)	17.63	(1.64)
3066	14.47	(1.34)	19.11	(1.77)
3070	15.69	(1.46)	20.59	(1.91)
3076	16.91	(1.57)	22.06	(2.05)
3080	18.13	(1.68)	23.54	(2.19)
3610	1.29	(0.12)	3.31	(0.31)
3616	2.75	(0.26)	5.04	(0.47)
3620	4.22	(0.39)	6.77	(0.63)
3626	5.69	(0.53)	8.50	(0.79)
3630	7.16	(0.67)	10.23	(0.95)
3636	8.63	(0.80)	11.96	(1.11)
3640	10.10	(0.94)	13.69	(1.27)
3646	11.57	(1.07)	15.42	(1.43)
3650	13.04	(1.21)	17.15	(1.59)
3656	14.50	(1.35)	18.88	(1.75)
3660	15.97	(1.48)	20.61	(1.91)
3666	17.44	(1.62)	22.34	(2.07)
3670	18.91	(1.76)	24.06	(2.24)
3676	20.38	(1.89)	25.79	(2.40)
3680	21.85	(2.03)	27.52	(2.56)

Window Number	Glass Area Sq. Ft./(m²)		Overall Window Area Sq. Ft./(m²)	
4010	1.50	(0.14)	3.79	(0.35)
4016	3.22	(0.30)	5.77	(0.54)
4020	4.94	(0.46)	7.75	(0.72)
4026	6.66	(0.62)	9.73	(0.90)
4030	8.38	(0.78)	11.71	(1.09)
4036	10.10	(0.94)	13.69	(1.27)
4040	11.82	(1.10)	15.67	(1.46)
4046	13.54	(1.26)	17.65	(1.64)
4050	15.25	(1.42)	19.63	(1.82)
4056	16.97	(1.58)	21.61	(2.01)
4060	18.69	(1.74)	23.59	(2.19)
4066	20.41	(1.90)	25.56	(2.37)
4070	22.13	(2.06)	27.54	(2.56)
4076	23.85	(2.22)	29.52	(2.74)
4080	25.57	(2.38)	31.50	(2.93)
4610	1.72	(0.16)	4.27	(0.40)
4616	3.69	(0.34)	6.50	(0.60)
4620	5.66	(0.53)	8.73	(0.81)
4626	7.63	(0.71)	10.96	(1.02)
4630	9.60	(0.89)	13.19	(1.23)
4636	11.57	(1.07)	15.42	(1.43)
4640	13.54	(1.26)	17.65	(1.64)
4646	15.50	(1.44)	19.88	(1.85)
4650	17.47	(1.62)	22.11	(2.05)
4656	19.44	(1.81)	24.34	(2.26)
4660	21.41	(1.99)	26.56	(2.47)
4666	23.38	(2.17)	28.79	(2.67)
4670	25.35	(2.35)	31.02	(2.88)
4676	27.32	(2.54)	33.25	(3.09)
4680	29.29	(2.72)	35.48	(3.30)
5010	1.94	(0.18)	4.75	(0.44)
5016	4.16	(0.39)	7.23	(0.67)
5020	6.38	(0.59)	9.71	(0.90)
5026	8.60	(0.80)	12.19	(1.13)
5030	10.82	(1.00)	14.67	(1.36)
5036	13.04	(1.21)	17.15	(1.59)
5040	15.25	(1.42)	19.63	(1.82)
5046	17.47	(1.62)	22.11	(2.05)
5050	19.69	(1.83)	24.59	(2.28)
5056	21.91	(2.04)	27.06	(2.51)
5060	24.13	(2.24)	29.54	(2.74)
5066	26.35	(2.45)	32.02	(2.97)
5070	28.57	(2.65)	34.50	(3.21)
5076	30.79	(2.86)	36.98	(3.44)
5080	33.00	(3.07)	39.46	(3.67)
5610	2.16	(0.20)	5.23	(0.49)
5616	4.63	(0.43)	7.96	(0.74)
5620	7.10	(0.66)	10.69	(0.99)
5626	9.57	(0.89)	13.42	(1.25)
5630	12.04	(1.12)	16.15	(1.50)
5636	14.50	(1.35)	18.88	(1.75)
5640	16.97	(1.58)	21.61	(2.01)
5646	19.44	(1.81)	24.34	(2.26)
5650	21.91	(2.04)	27.06	(2.51)
5656	24.38	(2.26)	29.79	(2.77)
5660	26.85	(2.49)	32.52	(3.02)
5666	29.32	(2.72)	35.25	(3.27)
5670	31.79	(2.95)	37.98	(3.53)
5676	34.25	(3.18)	40.71	(3.78)
5680	36.72	(3.41)	43.44	(4.04)

Window Number	Glass Area Sq. Ft./(m²)		Overall Window Area Sq. Ft./(m²)	
6010	2.38	(0.22)	5.71	(0.53)
6016	5.10	(0.47)	8.69	(0.81)
6020	7.82	(0.73)	11.67	(1.08)
6026	10.54	(0.98)	14.65	(1.36)
6030	13.25	(1.23)	17.63	(1.64)
6036	15.97	(1.48)	20.61	(1.91)
6040	18.69	(1.74)	23.59	(2.19)
6046	21.41	(1.99)	26.56	(2.47)
6050	24.13	(2.24)	29.54	(2.74)
6056	26.85	(2.49)	32.52	(3.02)
6060	29.57	(2.75)	35.50	(3.30)
6066	32.29	(3.00)	38.48	(3.57)
6070	35.00	(3.25)	41.46	(3.85)
6076	37.72	(3.50)	44.44	(4.13)
6080	40.44	(3.76)	47.42	(4.41)
6610	2.60	(0.24)	6.19	(0.57)
6616	5.57	(0.52)	9.42	(0.87)
6620	8.54	(0.79)	12.65	(1.17)
6626	11.50	(1.07)	15.88	(1.47)
6630	14.47	(1.34)	19.11	(1.77)
6636	17.44	(1.62)	22.34	(2.07)
6640	20.41	(1.90)	25.56	(2.37)
6646	23.38	(2.17)	28.79	(2.67)
6650	26.35	(2.45)	32.02	(2.97)
6656	29.32	(2.72)	35.25	(3.27)
6660	32.29	(3.00)	38.48	(3.57)
7010	2.82	(0.26)	6.67	(0.62)
7016	6.04	(0.56)	10.15	(0.94)
7020	9.25	(0.86)	13.63	(1.27)
7026	12.47	(1.16)	17.11	(1.59)
7030	15.69	(1.46)	20.59	(1.91)
7036	18.91	(1.76)	24.06	(2.24)
7040	22.13	(2.06)	27.54	(2.56)
7046	25.35	(2.35)	31.02	(2.88)
7050	28.57	(2.65)	34.50	(3.21)
7056	31.79	(2.95)	37.98	(3.53)
7060	35.00	(3.25)	41.46	(3.85)
7610	3.04	(0.28)	7.15	(0.66)
7616	6.50	(0.60)	10.88	(1.01)
7620	9.97	(0.93)	14.61	(1.36)
7626	13.44	(1.25)	18.34	(1.70)
7630	16.91	(1.57)	22.06	(2.05)
7636	20.38	(1.89)	25.79	(2.40)
7640	23.85	(2.22)	29.52	(2.74)
7646	27.32	(2.54)	33.25	(3.09)
7650	30.79	(2.86)	36.98	(3.44)
7656	34.25	(3.18)	40.71	(3.78)
7660	37.72	(3.50)	44.44	(4.13)
8010	3.25	(0.30)	7.63	(0.71)
8016	6.97	(0.65)	11.61	(1.08)
8020	10.69	(0.99)	15.59	(1.45)
8026	14.41	(1.34)	19.56	(1.82)
8030	18.13	(1.68)	23.54	(2.19)
8036	21.85	(2.03)	27.52	(2.56)
8040	25.57	(2.38)	31.50	(2.93)
8046	29.29	(2.72)	35.48	(3.30)
8050	33.00	(3.07)	39.46	(3.67)
8056	36.72	(3.41)	43.44	(4.04)
8060	40.44	(3.76)	47.42	(4.41)

- Dimensions in parentheses are in square meters.

Table of Twin and Triple Transom Window Sizes

Scale ⅛" (3) = 1'-0" (305) – 1:96

Notes on next page also apply to this page.

Window Dimension	2'-11 1/2" (902)	3'-5 1/2" (1054)	3'-11 1/2" (1207)	4'-5 1/2" (1359)	4'-11 1/2" (1511)	5'-5 1/2" (1664)	5'-11 1/2" (1816)	6'-11 1/2" (2121)
Minimum Rough Opening	3'-0" (914)	3'-6" (1067)	4'-0" (1219)	4'-6" (1372)	5'-0" (1524)	5'-6" (1676)	6'-0" (1829)	7'-0" (2134)
Unobstructed Glass (width of twin single sash)	11 1/4" (286)	14 1/4" (362)	17 1/4" (438)	20 1/4" (514)	23 1/4" (591)	26 1/4" (667)	29 1/4" (743)	35 1/4" (895)
Unobstructed Glass (width of triple single sash)				11 1/4" (286)			17 1/4" (438)	

CUSTOM WIDTHS TWIN – 35 1/2" to 95 1/2" TRIPLE – 53 1/2" to 143 1/2"

CUSTOM HEIGHTS – 11 1/2" to 23 1/2"

11 1/2" (292) 1'-0" (305) 5 1/4" (133)

1'-5 1/2" (445) 1'-6" (457) 11 1/4" (286)

1'-11 1/2" (597) 2'-0" (610) 17 1/4" (438)

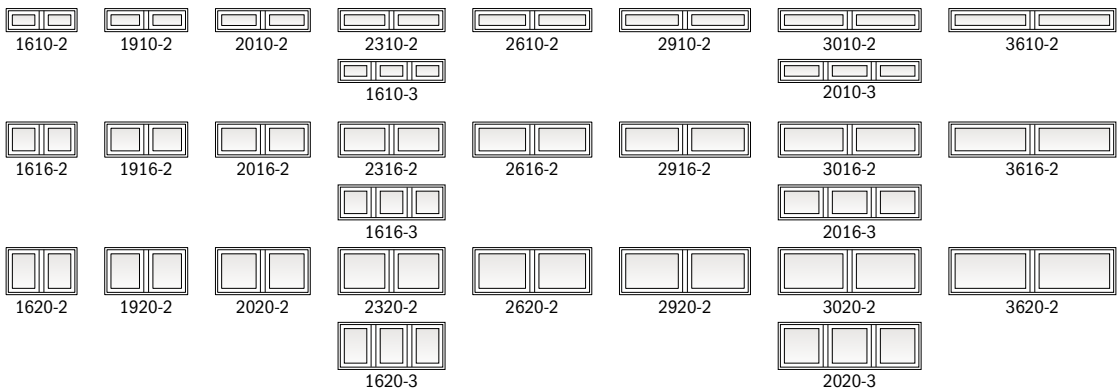

- Window Dimension always refers to outside frame-to-frame dimension.
- **Minimum Rough Opening dimensions may need to be increased to allow for use of building wraps, flashing, sill panning, brackets, fasteners or other items. See page 121 for more details.**
- Dimensions in parentheses are in millimeters.

Twin Transom Window Area Specifications

Window Number	Glass Area Sq. Ft./(m²)	Overall Window Area Sq. Ft./(m²)
1610-2	0.82 (0.08)	2.84 (0.26)
1910-2	1.04 (0.10)	3.31 (0.31)
2010-2	1.26 (0.12)	3.79 (0.35)
2310-2	1.48 (0.14)	4.27 (0.40)
2610-2	1.70 (0.16)	4.75 (0.44)
2910-2	1.91 (0.18)	5.23 (0.49)
3010-2	2.13 (0.20)	5.71 (0.53)
3610-2	2.57 (0.24)	6.67 (0.62)
4010-2	3.01 (0.28)	7.63 (0.71)
1616-2	1.76 (0.16)	4.31 (0.40)
1916-2	2.23 (0.21)	5.04 (0.47)
2016-2	2.70 (0.25)	5.77 (0.54)
2316-2	3.16 (0.29)	6.50 (0.60)
2616-2	3.63 (0.34)	7.23 (0.67)
2916-2	4.10 (0.38)	7.96 (0.74)
3016-2	4.57 (0.42)	8.69 (0.81)
3616-2	5.51 (0.51)	10.15 (0.94)
4016-2	6.45 (0.60)	11.61 (1.08)
1620-2	2.70 (0.25)	5.79 (0.54)
1920-2	3.41 (0.32)	6.77 (0.63)
2020-2	4.13 (0.38)	7.75 (0.72)
2320-2	4.85 (0.45)	8.73 (0.81)
2620-2	5.57 (0.52)	9.71 (0.90)
2920-2	6.29 (0.58)	10.69 (0.99)
3020-2	7.01 (0.65)	11.67 (1.08)
3620-2	8.45 (0.78)	13.63 (1.27)
4020-2	9.88 (0.92)	15.59 (1.45)

- Dimensions in parentheses are in square meters.

Triple Transom Window Area Specifications

Window Number	Glass Area Sq. Ft./(m²)	Overall Window Area Sq. Ft./(m²)
1610-3	1.23 (0.11)	4.27 (0.40)
2010-3	1.89 (0.18)	5.71 (0.53)
2610-3	2.54 (0.24)	7.15 (0.66)
3010-3	3.20 (0.30)	8.59 (0.80)
3610-3	3.86 (0.36)	10.02 (0.93)
4010-3	4.51 (0.42)	11.46 (1.06)
1616-3	2.64 (0.24)	6.50 (0.60)
2016-3	4.04 (0.38)	8.69 (0.81)
2616-3	5.45 (0.51)	10.88 (1.01)
3016-3	6.86 (0.64)	13.06 (1.21)
3616-3	8.26 (0.77)	15.25 (1.42)
4016-3	9.67 (0.90)	17.44 (1.62)
1620-3	4.04 (0.38)	8.73 (0.81)
2020-3	6.20 (0.58)	11.67 (1.08)
2620-3	8.36 (0.78)	14.61 (1.36)
3020-3	10.51 (0.98)	17.54 (1.63)
3620-3	12.67 (1.18)	20.48 (1.90)
4020-3	14.82 (1.38)	23.42 (2.18)

- Dimensions in parentheses are in square meters.

Half Circle Window Area Specifications

Window Number	Glass Area Sq. Ft./(m²)	Overall Window Area Sq. Ft./(m²)
20	0.80 (0.07)	2.02 (0.19)
26	1.46 (0.14)	3.01 (0.28)
30	2.32 (0.22)	4.21 (0.39)
36	3.37 (0.31)	5.60 (0.52)
40	4.62 (0.43)	7.18 (0.67)
46	6.06 (0.56)	8.97 (0.83)
50	7.70 (0.72)	10.95 (1.02)
56	9.54 (0.89)	13.12 (1.22)
60	11.58 (1.08)	15.49 (1.44)
66	13.81 (1.28)	18.06 (1.68)
70	16.23 (1.51)	20.83 (1.93)
76	18.85 (1.75)	23.79 (2.21)
80	21.67 (2.01)	26.94 (2.50)

- Dimensions in parentheses are in square meters.

Circle Window Area Specifications

Window Number	Glass Area Sq. Ft./(m²)	Overall Window Area Sq. Ft./(m²)
2020	1.61 (0.15)	3.01 (0.28)
2626	2.93 (0.27)	4.75 (0.44)
3030	4.65 (0.43)	6.87 (0.64)
3636	6.75 (0.63)	9.39 (0.87)
4040	9.25 (0.86)	12.31 (1.14)

- Dimensions in parentheses are in square meters.

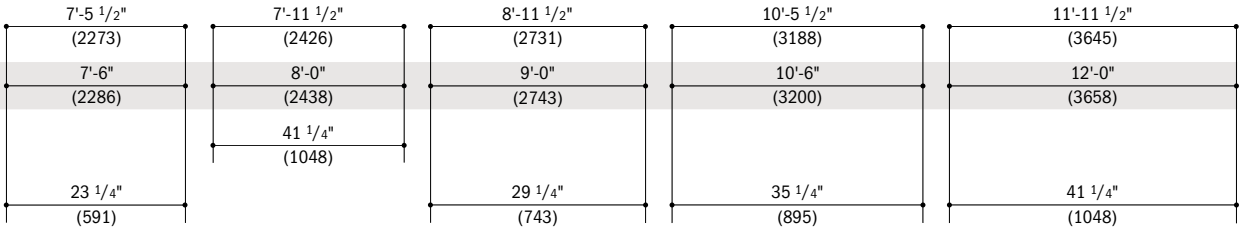

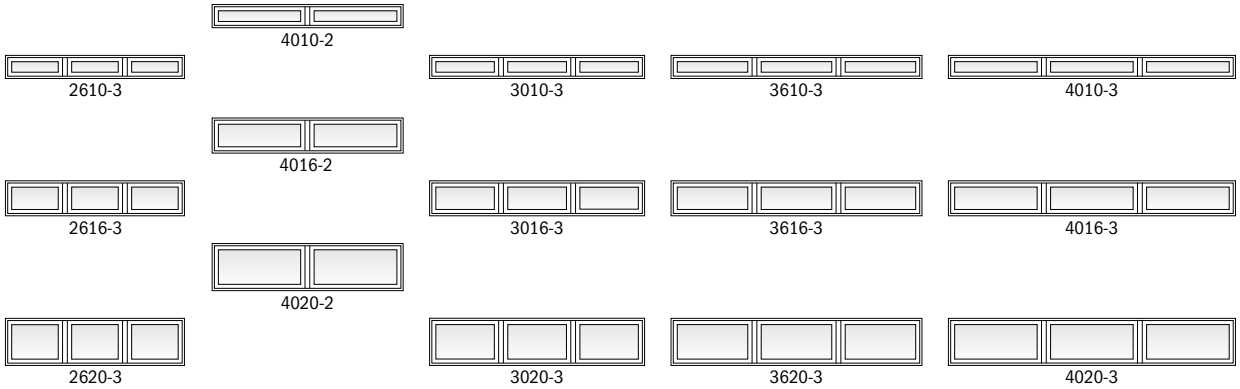

Custom-size windows are available in 1/8" (3) increments. See page 98 for custom sizes and specifications.

Windows have one continuous outer frame. Details shown on pages 83-86.

- Window Dimension always refers to outside frame-to-frame dimension.
- **Minimum Rough Opening dimensions may need to be increased to allow for use of building wraps, flashing, sill panning, brackets, fasteners or other items. See page 121 for more details.**
- Dimensions in parentheses are in millimeters.

Quarter Circle Window Area Specifications

Window Number	Glass Area Sq. Ft./(m²)		Overall Window Area Sq. Ft./(m²)	
1616	0.69	(0.06)	1.82	(0.17)
2020	1.62	(0.15)	3.22	(0.30)
2626	2.95	(0.27)	5.01	(0.47)
3030	4.67	(0.43)	7.19	(0.67)
3636	6.78	(0.63)	9.77	(0.91)
4040	9.28	(0.86)	12.73	(1.18)
4646	12.18	(1.13)	16.09	(1.50)
5050	15.47	(1.44)	19.85	(1.84)

- Dimensions in parentheses are in square meters.

Springline™ Window Area Specifications

Window Number	Glass Area Sq. Ft./(m²)		Overall Window Area Sq. Ft./(m²)	
2020	3.23	(0.30)	5.34	(0.50)
2026	3.95	(0.37)	6.32	(0.59)
2030	4.67	(0.43)	7.30	(0.68)
2036	5.38	(0.50)	8.28	(0.77)
2040	6.10	(0.57)	9.26	(0.86)
2046	6.81	(0.63)	10.24	(0.95)
2050	7.53	(0.70)	11.22	(1.04)
2620	4.74	(0.44)	7.19	(0.67)
2626	5.71	(0.53)	8.42	(0.78)
2630	6.67	(0.62)	9.65	(0.90)
2636	7.64	(0.71)	10.87	(1.01)
2640	8.61	(0.80)	12.10	(1.12)
2646	9.57	(0.89)	13.33	(1.24)

Window Number	Glass Area Sq. Ft./(m²)		Overall Window Area Sq. Ft./(m²)	
2650	10.54	(0.98)	14.56	(1.35)
3020	6.45	(0.60)	9.23	(0.86)
3026	7.66	(0.71)	10.71	(0.99)
3030	8.88	(0.82)	12.19	(1.13)
3036	10.10	(0.94)	13.67	(1.27)
3040	11.31	(1.05)	15.15	(1.41)
3046	12.53	(1.16)	16.63	(1.54)
3050	13.74	(1.28)	18.11	(1.68)
3620	8.35	(0.78)	11.47	(1.07)
3626	9.81	(0.91)	13.20	(1.23)
3630	11.28	(1.05)	14.93	(1.39)
3636	12.75	(1.18)	16.66	(1.55)
3640	14.21	(1.32)	18.39	(1.71)
3646	15.68	(1.46)	20.12	(1.87)
3650	17.14	(1.59)	21.84	(2.03)
4020	10.45	(0.97)	13.90	(1.29)
4026	12.16	(1.13)	15.88	(1.48)
4030	13.88	(1.29)	17.86	(1.66)
4036	15.59	(1.45)	19.84	(1.84)
4040	17.31	(1.61)	21.82	(2.03)
4046	19.03	(1.77)	23.80	(2.21)
4050	20.74	(1.93)	25.78	(2.40)
4620	12.74	(1.18)	16.54	(1.54)
4626	14.71	(1.37)	18.77	(1.74)
4630	16.67	(1.55)	20.99	(1.95)
4636	18.64	(1.73)	23.22	(2.16)
4640	20.60	(1.91)	25.45	(2.36)
4646	22.57	(2.10)	27.68	(2.57)

Window Number	Glass Area Sq. Ft./(m²)		Overall Window Area Sq. Ft./(m²)	
4650	24.54	(2.28)	29.91	(2.78)
5020	15.23	(1.41)	19.36	(1.80)
5026	17.45	(1.62)	21.84	(2.03)
5030	19.66	(1.83)	24.32	(2.26)
5036	21.88	(2.03)	26.80	(2.49)
5040	24.09	(2.24)	29.28	(2.72)
5046	26.31	(2.44)	31.76	(2.95)
5050	28.53	(2.65)	34.24	(3.18)
5620	17.92	(1.66)	22.39	(2.08)
5626	20.38	(1.89)	25.12	(2.33)
5630	22.85	(2.12)	27.85	(2.59)
5636	25.31	(2.35)	30.58	(2.84)
5640	27.78	(2.58)	33.31	(3.09)
5646	30.25	(2.81)	36.03	(3.35)
5650	32.71	(3.04)	38.76	(3.60)
6020	20.80	(1.93)	25.61	(2.38)
6026	23.51	(2.18)	28.59	(2.66)
6030	26.23	(2.44)	31.57	(2.93)
6036	28.95	(2.69)	34.55	(3.21)
6040	31.66	(2.94)	37.53	(3.49)
6046	34.38	(3.19)	40.51	(3.76)
6050	37.10	(3.45)	43.48	(4.04)

- Dimensions in parentheses are in square meters.

Table of Half Circle Window Sizes

Scale 1/8" (3) = 1'-0" (305) – 1:96

Window Dimension	1'-11 1/2" (597)	2'-5 1/2" (749)	2'-11 1/2" (902)
Minimum Rough Opening	2'-0" (610)	2'-6" (762)	3'-0" (914)
Unobstructed Glass	17 1/4" (438)	23 1/4" (591)	29 1/4" (743)
Radius	11 3/4" (298)	14 3/4" (375)	17 3/4" (451)
	1'-2 7/8" (378) / 1'-3 3/8" (391) / 8 5/8" (219)	1'-5 7/8" (454) / 1'-6 3/8" (467) / 11 5/8" (295)	1'-8 7/8" (530) / 1'-9 3/8" (543) / 14 5/8" (371)
	20	26	30
	3'-5 1/2" (1054)	3'-11 1/2" (1207)	4'-5 1/2" (1359)
	3'-6" (1067)	4'-0" (1219)	4'-6" (1372)
	35 1/4" (895)	41 1/4" (1048)	47 1/4" (1200)
Radius	20 3/4" (527)	23 3/4" (603)	26 3/4" (679)
	1'-11 7/8" (606) / 2'-0 3/8" (619) / 17 5/8" (448)	2'-2 7/8" (683) / 2'-3 3/8" (695) / 20 5/8" (524)	2'-5 7/8" (759) / 2'-6 3/8" (772) / 23 5/8" (600)
	36	40	46
	4'-11 1/2" (1511)	5'-5 1/2" (1664)	5'-11 1/2" (1816)	6'-5 1/2" (1969)
	5'-0" (1524)	5'-6" (1676)	6'-0" (1829)	6'-6" (1981)
	53 1/4" (1353)	59 1/4" (1505)	65 1/4" (1657)	71 1/4" (1810)
Radius	29 3/4" (756)	32 3/4" (832)	35 3/4" (908)	38 3/4" (984)
	2'-8 7/8" (835) / 2'-9 3/8" (848) / 26 5/8" (676)	2'-11 7/8" (911) / 3'-0 3/8" (924) / 29 5/8" (752)	3'-2 7/8" (987) / 3'-3 3/8" (1000) / 32 5/8" (829)	3'-5 7/8" (1064) / 3'-6 3/8" (1076) / 35 5/8" (905)
	50	56	60	66
	6'-11 1/2" (2121)	7'-5 1/2" (2273)	7'-11 1/2" (2426)
	7'-0" (2134)	7'-6" (2286)	8'-0" (2438)
	77 1/4" (1962)	83 1/4" (2115)	89 1/4" (2267)
Radius	41 3/4" (1060)	44 3/4" (1137)	47 3/4" (1213)
	3'-8 7/8" (1140) / 3'-9 3/8" (1153) / 38 5/8" (981)	3'-11 7/8" (1216) / 4'-0 3/8" (1229) / 41 5/8" (1057)	4'-2 7/8" (1292) / 4'-3 3/8" (1305) / 44 5/8" (1133)
	70	76	80

Custom-size half circle windows are available in 1/8" (3) increments. Contact your Andersen supplier for more information.

Grille patterns shown on page 79.
Details shown on pages 83-86.

- Window Dimension always refers to outside frame-to-frame dimension.
- **Minimum Rough Opening dimensions may need to be increased to allow for use of building wraps, flashing, sill panning, brackets, fasteners or other items. See page 121 for more details.**
- Dimensions in parentheses are in millimeters.

Table of Quarter Circle Window Sizes

Scale 1/8" (3) = 1'-0" (305) – 1:96

Window Dimension	1'-5 1/2" (445)	1'-11 1/2" (597)	2'-5 1/2" (749)	2'-11 1/2" (902)
Minimum Rough Opening	1'-6" (457)	2'-0" (610)	2'-6" (762)	3'-0" (914)
Unobstructed Glass	5 1/4" (133)	17 1/2" (438)	23 1/4" (591)	29 1/4" (743)
Radius	14 3/8" (365)	20 3/8" (518)	26 3/8" (670)	32 3/8" (822)

	3'-5 1/2" (1054)	3'-11 1/2" (1207)	4'-5 1/2" (1359)	4'-11 1/2" (1511)
	3'-6" (1067)	4'-0" (1219)	4'-6" (1372)	5'-0" (1524)
	35 1/4" (895)	41 1/4" (1048)	47 1/4" (1200)	53 1/4" (1353)
	38 3/8" (975)	44 3/8" (1127)	50 3/8" (1280)	56 3/8" (1432)

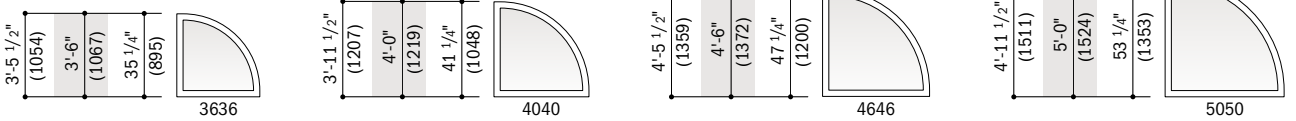

Custom-size quarter circle windows are available in 1/8" (3) increments. Contact your Andersen supplier for more information. Grille patterns shown on page 79. Details shown on pages 83-86.

Table of Circle Window Sizes

Scale 1/8" (3) = 1'-0" (305) – 1:96

Window Dimension	1'-11 1/2" (597)	2'-5 1/2" (749)	2'-11 1/2" (902)	3'-5 1/2" (1054)	3'-11 1/2" (1207)
Minimum Rough Opening	2'-0" (610)	2'-6" (762)	3'-0" (914)	3'-6" (1067)	4'-0" (1219)
Unobstructed Glass	17 1/4" (438)	23 1/4" (591)	29 1/4" (743)	35 1/4" (895)	41 1/4" (1048)

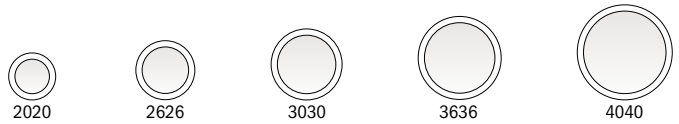

Custom-size circle windows are available in 1/8" (3) increments. Contact your Andersen supplier for more information. Grille patterns shown on page 79. Details shown on pages 83-86.

- Window Dimension always refers to outside frame-to-frame dimension.
- **Minimum Rough Opening dimensions may need to be increased to allow for use of building wraps, flashing, sill panning, brackets, fasteners or other items. See page 121 for more details.**
- Dimensions in parentheses are in millimeters.

These custom shapes are available in 1/8" (3) increments.

Design Criteria
Listed for each custom shape are factors that must be considered when deciding on a custom-shaped specialty window.

Grilles are available for most shapes and sizes in colonial and specified equal divided light patterns. For more grille options, see page 14 or contact your Andersen supplier. Details shown on pages 83-86.

Custom Unequal Leg Arch

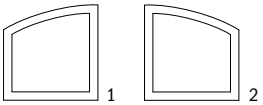

Choose left facing (1) or right facing (2) as viewed from the exterior. Contains unequal legs, two right angles at the sill and an arch at the top.

Custom-size design limitations:

Min./Max. Window Width
17 1/2" (445) to 95 1/2" (2426)

Min./Max. Window Height
11 3/8" (289) to 95 1/2" (2426)

Min./Max. Short Side Height
9 3/4" (248) to 93 7/8" (2384)

Max. Frame Area: 40 sq. ft. or 3.7 m²
Based on the smallest square or rectangular shape that covers the entire window.

Additional limitations may apply. Contact your Andersen supplier for more information.

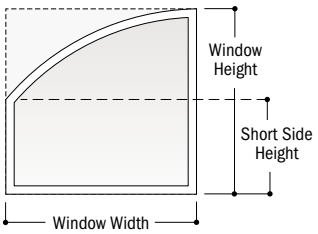

Custom Trapezoid

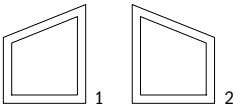

Choose left facing (1) or right facing (2) as viewed from the exterior. Contains a slope to the left or right. Slope is often designed to match a roof's pitch.

Custom-size design limitations:

Min./Max. Window Width
17 1/2" (445) to 107 1/2" (2731)

Min./Max. Window Height
9 7/8" (251) to 95 1/2" (2426)

Min./Max. Short Side Height
9 3/4" (248) to 95 3/8" (2423)

Max. Frame Area: 40 sq. ft. or 3.7 m²
Based on the smallest square or rectangular shape that covers the entire window.

Additional limitations may apply. Contact your Andersen supplier for more information.

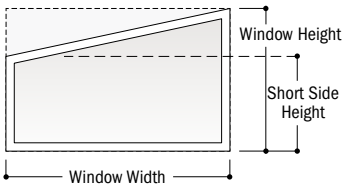

Custom Peak Pentagon

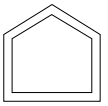

Contains sides of equal length, extending at right angles from the sill and two angled sides of equal length that peak above the center of the sill.

Custom-size design limitations:

Min./Max. Window Width
17 1/2" (445) to 107 1/2" (2731)

Min./Max. Window Height
14 1/8" (359) to 107 1/2" (2731)

Min./Max. Side Height
9 3/4" (248) to 94 1/8" (2391)

Max. Frame Area: 40 sq. ft. or 3.7 m²
Based on the smallest square or rectangular shape that covers the entire window.

Additional limitations may apply. Contact your Andersen supplier for more information.

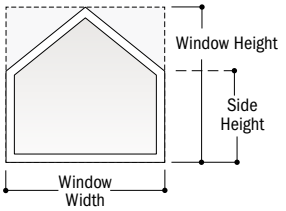

• Dimensions in parentheses are in millimeters.

Custom Angled Pentagon

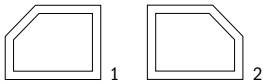

Choose left facing (1) or right facing (2) as viewed from the exterior. Contains an angle cut, or a "clipped corner," sloping to the left or right.

Custom-size design limitations:

Min./Max. Window Width
17 1/2" (445) to 107 1/2" (2731)

Min./Max. Top Width
9 3/4" (248) to 107 3/8" (2727)

Min./Max. Window Height
14 3/8" (365) to 107 1/2" (2731)

Min./Max. Short Side Height
9 3/4" (248) to 94 1/8" (226)

Max. Frame Area: 40 sq. ft. or 3.7 m²
Based on the smallest square or rectangular shape that covers the entire window.

Additional limitations may apply. Contact your Andersen supplier for more information.

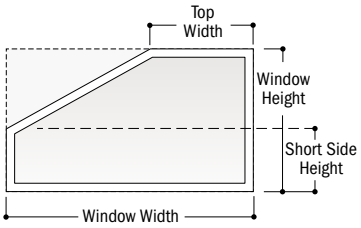

Custom Octagon

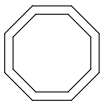

Contains eight equal angles and sides.

Custom-size design limitations:

Min./Max. Window Width
23 1/2" (597) to 71 1/2" (1816)

Min./Max. Window Height
23 1/2" (597) to 71 1/2" (1816)

Additional limitations may apply. Contact your Andersen supplier for more information.

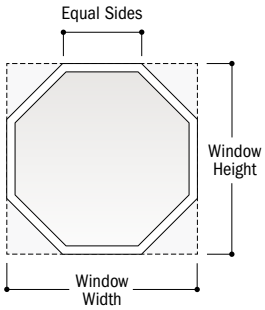

Custom Right Triangle

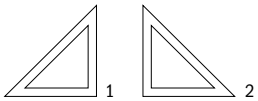

Choose left facing (1) or right facing (2) as viewed from the exterior. Contains one 90-degree angle.

Custom-size design limitations:

Min./Max. Window Width
17 1/2" (445) to 95 1/2" (2426)

Min./Max. Window Height
17 1/2" (445) to 95 1/2" (2426)

Max. Frame Area: 40 sq. ft. or 3.7 m²
Based on the smallest square or rectangular shape that covers the entire window.

Additional limitations may apply. Contact your Andersen supplier for more information.

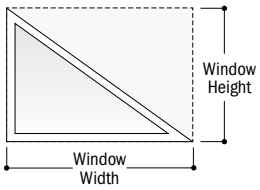

Custom Isosceles Triangle

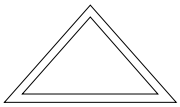

Contains two sides of equal length and two equal angles.

Custom-size design limitations:

Min./Max. Window Width
17 1/2" (445) to 107 1/2" (2731)

Min./Max. Window Height
17 1/2" (445) to 75 7/8" (1927)

Max. Frame Area: 40 sq. ft. or 3.7 m²
Based on the smallest square or rectangular shape that covers the entire window.

Additional limitations may apply. Contact your Andersen supplier for more information.

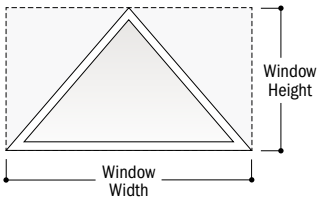

• Dimensions in parentheses are in millimeters.

Table of Springline™ Window Sizes

Scale 1/8" (3) = 1'-0" (305) – 1:96

Notes on next page also apply to this page.

Window Width Dimension	1'-11 1/2" (597)	2'-5 1/2" (749)	2'-11 1/2" (902)	3'-5 1/2" (1054)	3'-11 1/2" (1207)	4'-5 1/2" (1359)	4'-11 1/2" (1511)
Minimum Rough Opening	2'-0" (610)	2'-6" (762)	3'-0" (914)	3'-6" (1067)	4'-0" (1219)	4'-6" (1372)	5'-0" (1524)
Unobstructed Glass	17 1/4" (438)	23 1/4" (591)	29 1/4" (743)	35 1/4" (895)	41 1/4" (1048)	47 1/4" (1200)	53 1/4" (1353)

Window Height Shown in Table

CUSTOM SIZES AVAILABLE

Radius	11 3/4" (298)	14 3/4" (375)	17 3/4" (451)	20 3/4" (527)	23 3/4" (603)	26 3/4" (679)	29 3/4" (756)
Chord Height	11 3/4" (298)	14 3/4" (375)	17 3/4" (451)	20 3/4" (527)	23 3/4" (603)	26 3/4" (679)	29 3/4" (756)

Minimum Rough Opening = Window Height + 1/2" (13)

Unobstructed Glass = Window Height – 6.25" (159)

CUSTOM SIZES AVAILABLE

Side Height

Side Height	11 3/4" (298)	14 3/4" (375)	17 3/4" (451)	20 3/4" (527)	23 3/4" (603)	26 3/4" (679)	29 3/4" (756)
1'-11 1/2" (597)	2'-11 1/4" (895) 2020	3'-2 1/4" (972) 2620	3'-5 1/4" (1048) 3020	3'-8 1/4" (1124) 3620	3'-11 1/4" (1200) 4020	4'-2 1/4" (1276) 4620	4'-5 1/4" (1353) 5020
2'-5 1/2" (749)	3'-5 1/4" (1048) 2026	3'-8 1/4" (1124) 2626	3'-11 1/4" (1200) 3026	4'-2 1/4" (1276) 3626	4'-5 1/4" (1353) 4026	4'-8 1/4" (1429) 4626	4'-11 1/4" (1505) 5026
2'-11 1/2" (902)	3'-11 1/4" (1200) 2030	4'-2 1/4" (1276) 2630	4'-5 1/4" (1353) 3030	4'-8 1/4" (1429) 3630	4'-11 1/4" (1505) 4030	5'-2 1/4" (1581) 4630	5'-5 1/4" (1657) 5030
3'-5 1/2" (1054)	4'-5 1/4" (1353) 2036	4'-8 1/4" (1429) 2636	4'-11 1/4" (1505) 3036	5'-2 1/4" (1581) 3636	5'-5 1/4" (1657) 4036	5'-8 1/4" (1734) 4636	5'-11 1/4" (1810) 5036
3'-11 1/2" (1207)	4'-11 1/4" (1505) 2040	5'-2 1/4" (1581) 2640	5'-5 1/4" (1657) 3040	5'-8 1/4" (1734) 3640	5'-11 1/4" (1810) 4040	6'-2 1/4" (1886) 4640	6'-5 1/4" (1962) 5040
4'-5 1/2" (1359)	5'-5 1/4" (1657) 2046	5'-8 1/4" (1734) 2646	5'-11 1/4" (1810) 3046	6'-2 1/4" (1886) 3646	6'-5 1/4" (1962) 4046	6'-8 1/4" (2038) 4646	6'-11 1/4" (2115) 5046
4'-11 1/2" (1511)	5'-11 1/4" (1810) 2050	6'-2 1/4" (1886) 2650	6'-5 1/4" (1962) 3050	6'-8 1/4" (2038) 3650	6'-11 1/4" (2115) 4050	7'-2 1/4" (2191) 4650	7'-5 1/4" (2267) 5050

- Window Dimension always refers to outside frame-to-frame dimension.
- **Minimum Rough Opening dimensions may need to be increased to allow for use of building wraps, flashing, sill panning, brackets, fasteners or other items. See page 121 for more details.**
- Dimensions in parentheses are in millimeters.

5'-5 1/2" (1664)	5'-11 1/2" (1816)
5'-6" (1676)	6'-0" (1829)
59 1/4" (1505)	65 1/4" (1657)

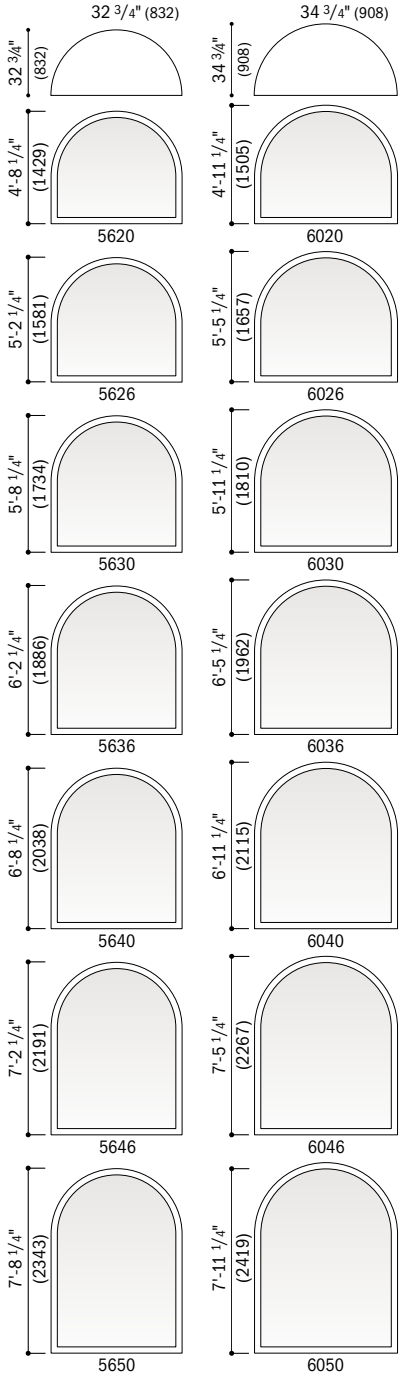

• Window Dimension always refers to outside frame-to-frame dimension.
• **Minimum Rough Opening dimensions may need to be increased to allow for use of building wraps, flashing, sill panning, brackets, fasteners or other items. See page 121 for more details.**
• Dimensions in parentheses are in millimeters.

Custom-size windows are available in 1/8" (3) increments.

Contact your Andersen supplier for more information.

For Springline™ and arch windows, the size designation does not reflect the overall window height (e.g., a 2020 Springline window size has a side height of 1'-11 1/2" and an overall window height of 2'-11 1/4").

Grille patterns shown below. Details shown on pages 83-86.

Grille Patterns

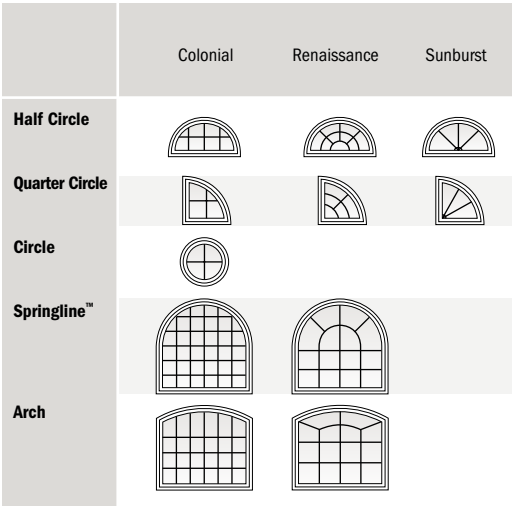

Number of lights and overall pattern varies with window size. Patterns may not be available in all configurations or sizes. Specialty window patterns may not align with picture window patterns when joined. Specified equal light pattern is available for all shapes except quarter circle. For specified equal light, specify number of same-size rectangles across or down. Custom grille patterns are available for picture and transom windows. For more grille options, see page 14 or visit **andersenwindows.com/grilles**.

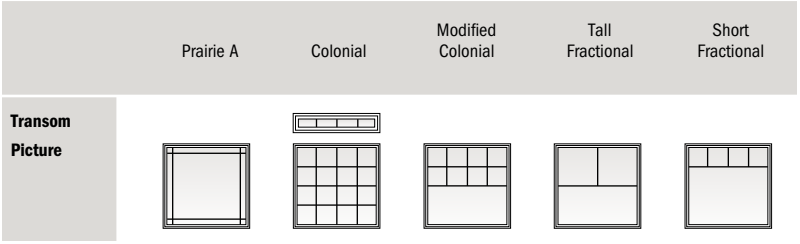

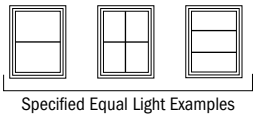

Specified Equal Light Examples

Table of Arch Window Sizes

Scale 1/8" (3) = 1'-0" (305) – 1:96

Notes on page 79 also apply to this page.

Window Width Dimension	1'-11 1/2" (597)	2'-5 1/2" (749)	2'-11 1/2" (902)	3'-5 1/2" (1054)	3'-11 1/2" (1207)	4'-5 1/2" (1359)	4'-11 1/2" (1511)
Minimum Rough Opening	2'-0" (610)	2'-6" (762)	3'-0" (914)	3'-6" (1067)	4'-0" (1219)	4'-6" (1372)	5'-0" (1524)
Unobstructed Glass	17 1/4" (438)	23 1/4" (591)	29 1/4" (743)	35 1/4" (895)	41 1/4" (1048)	47 1/4" (1200)	53 1/4" (1353)

CUSTOM SIZES AVAILABLE

Window Height Shown in Table

Minimum Rough Opening = Window Height + 1/2" (13)

Unobstructed Glass = Window Height – 6.25" (159)

CUSTOM SIZES AVAILABLE

Radius	23 1/2" (597)	29 1/2" (749)	35 1/2" (902)	41 1/2" (1054)	47 1/2" (1207)	53 1/2" (1359)	59 1/2" (1511)
Chord Height	3 5/32" (80)	3 15/16" (100)	4 3/4" (121)	5 9/16" (141)	6 3/8" (162)	7 5/32" (182)	7 31/32" (202)
Side Height 11 1/2" (292)	1'-2 21/32" (372) 2010	1'-3 7/16" (392) 2610	1'-4 1/4" (413) 3010	1'-5 1/16" (433) 3610	1'-5 7/8" (454) 4010	1'-6 21/32" (474) 4610	1'-7 15/32" (495) 5010
1'-5 1/2" (445)	1'-8 21/32" (524) 2016	1'-9 7/16" (545) 2616	1'-10 1/4" (565) 3016	1'-11 1/16" (586) 3616	1'-11 7/8" (606) 4016	2'-0 21/32" (627) 4616	2'-1 15/32" (647) 5016
1'-11 1/2" (597)	2'-2 21/32" (677) 2020	2'-3 7/16" (697) 2620	2'-4 1/4" (718) 3020	2'-5 1/16" (738) 3620	2'-5 7/8" (759) 4020	2'-6 21/32" (779) 4620	2'-7 15/32" (799) 5020
2'-5 1/2" (749)	2'-8 21/32" (829) 2026	2'-9 7/16" (850) 2626	2'-10 1/4" (870) 3026	2'-11 1/16" (891) 3626	2'-11 7/8" (911) 4026	3'-0 21/32" (931) 4626	3'-1 15/32" (952) 5026
2'-11 1/2" (902)	3'-2 21/32" (982) 2030	3'-3 7/16" (1002) 2630	3'-4 1/4" (1023) 3030	3'-5 1/16" (1043) 3630	3'-5 7/8" (1063) 4030	3'-6 21/32" (1084) 4630	3'-7 15/32" (1104) 5030
3'-5 1/2" (1054)	3'-8 21/32" (1134) 2036	3'-9 7/16" (1154) 2636	3'-10 1/4" (1175) 3036	3'-11 1/16" (1195) 3636	3'-11 7/8" (1216) 4036	4'-0 21/32" (1236) 4636	4'-1 15/32" (1257) 5036
3'-11 1/2" (1207)	4'-2 21/32" (1286) 2040	4'-3 7/16" (1307) 2640	4'-4 1/4" (1327) 3040	4'-5 1/16" (1348) 3640	4'-5 7/8" (1368) 4040	4'-6 21/32" (1389) 4640	4'-7 15/32" (1409) 5040
4'-5 1/2" (1359)	4'-8 21/32" (1439) 2046	4'-9 7/16" (1459) 2646	4'-10 1/4" (1480) 3046	4'-11 1/16" (1500) 3646	4'-11 7/8" (1521) 4046	5'-0 21/32" (1541) 4646	5'-1 15/32" (1561) 5046
4'-11 1/2" (1511)	5'-2 21/32" (1591) 2050	5'-3 7/16" (1612) 2650	5'-4 1/4" (1632) 3050	5'-5 1/16" (1653) 3650	5'-5 7/8" (1673) 4050	5'-6 21/32" (1693) 4650	5'-7 15/32" (1714) 5050
5'-5 1/2" (1664)	5'-8 21/32" (1744) 2056	5'-9 7/16" (1764) 2656	5'-10 1/4" (1785) 3056	5'-11 1/16" (1805) 3656	5'-11 7/8" (1825) 4056	6'-0 21/32" (1846) 4656	6'-1 15/32" (1866) 5056
5'-11 1/2" (1816)	6'-2 21/32" (1896) 2060	6'-3 7/16" (1916) 2660	6'-4 1/4" (1937) 3060	6'-5 1/16" (1957) 3660	6'-5 7/8" (1978) 4060	6'-6 21/32" (1998) 4660	6'-7 15/32" (2019) 5060

Notes on page 79 also apply to this page.

5'-5 1/2" (1664)	5'-11 1/2" (1816)	6'-5 1/2" (1969)	6'-11 1/2" (2121)	7'-5 1/2" (2273)	7'-11 1/2" (2426)
5'-6" (1676)	6'-0" (1829)	6'-6" (1981)	7'-0" (2134)	7'-6" (2286)	8'-0" (2438)
59 1/4" (1505)	65 1/4" (1657)	71 1/4" (1810)	77 1/4" (1962)	83 1/4" (2115)	89 1/4" (2267)

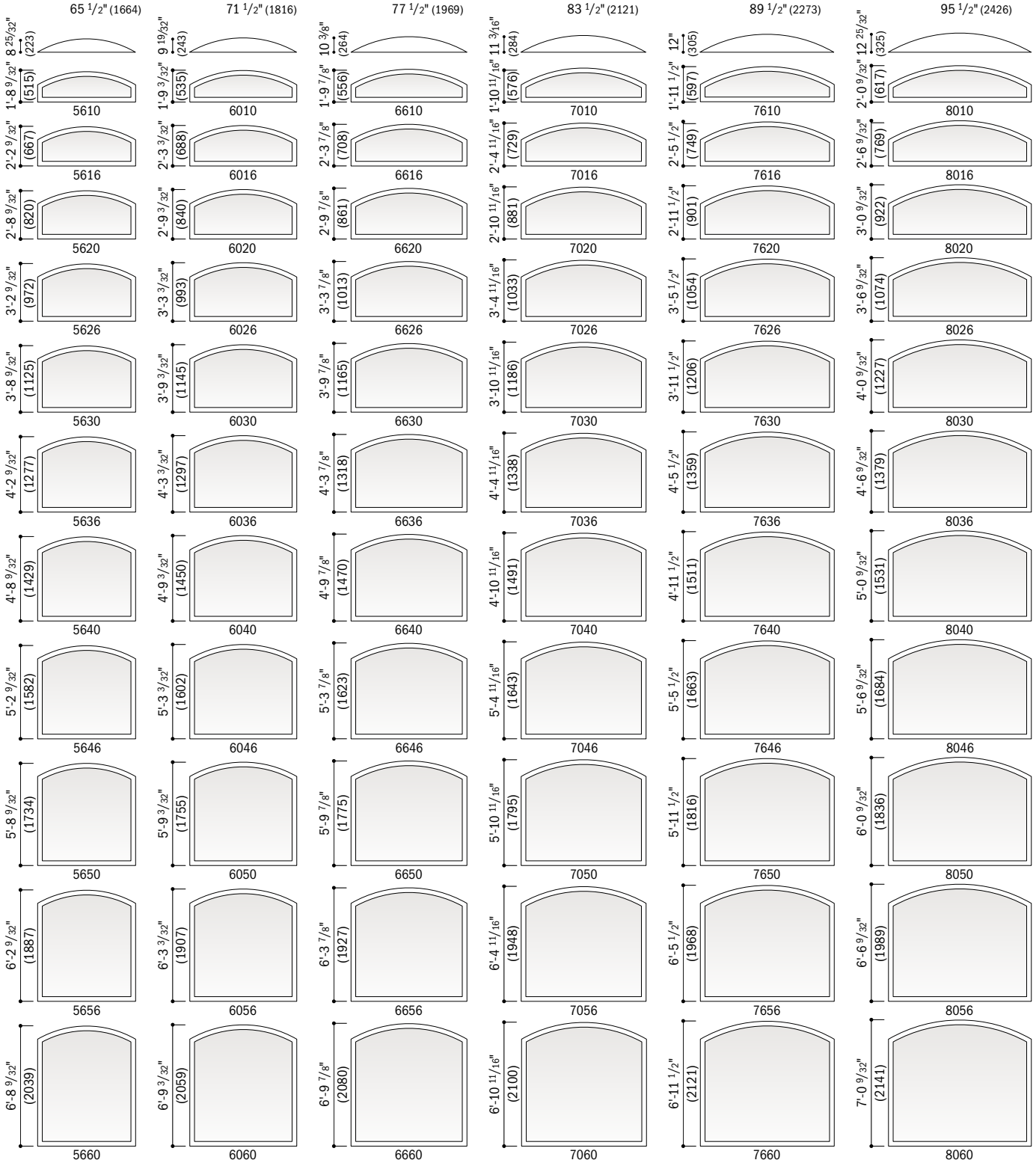

Arch Window Area Specifications

Window Number	Glass Area Sq. Ft./(m²)		Overall Window Area Sq. Ft./(m²)	
2010	0.93	(0.09)	2.22	(0.21)
2016	1.65	(0.15)	3.20	(0.30)
2020	2.37	(0.22)	4.18	(0.39)
2026	3.09	(0.29)	5.16	(0.48)
2030	3.81	(0.35)	6.14	(0.57)
2036	4.52	(0.42)	7.12	(0.66)
2040	5.24	(0.49)	8.10	(0.75)
2046	5.96	(0.55)	9.08	(0.84)
2050	6.68	(0.62)	10.06	(0.93)
2056	7.40	(0.69)	11.04	(1.03)
2060	8.12	(0.75)	12.02	(1.12)
2610	1.34	(0.12)	2.90	(0.27)
2616	2.31	(0.21)	4.13	(0.38)
2620	3.28	(0.30)	5.36	(0.50)
2626	4.25	(0.39)	6.59	(0.61)
2630	5.22	(0.48)	7.82	(0.73)
2636	6.19	(0.57)	9.05	(0.84)
2640	7.16	(0.66)	10.28	(0.95)
2646	8.12	(0.75)	11.51	(1.07)
2650	9.09	(0.84)	12.74	(1.18)
2656	10.06	(0.93)	13.97	(1.30)
2660	11.03	(1.02)	15.20	(1.41)
3010	1.80	(0.17)	3.63	(0.34)
3016	3.02	(0.28)	5.11	(0.47)
3020	4.24	(0.39)	6.59	(0.61)
3026	5.46	(0.51)	8.07	(0.75)
3030	6.68	(0.62)	9.54	(0.89)
3036	7.90	(0.73)	11.02	(1.02)
3040	9.11	(0.85)	12.50	(1.16)
3046	10.33	(0.96)	13.98	(1.30)
3050	11.55	(1.07)	15.46	(1.44)
3056	12.77	(1.19)	16.94	(1.57)
3060	13.99	(1.30)	18.42	(1.71)
3610	2.30	(0.21)	4.40	(0.41)
3616	3.77	(0.35)	6.13	(0.57)
3620	5.24	(0.49)	7.86	(0.73)
3626	6.71	(0.62)	9.59	(0.89)
3630	8.18	(0.76)	11.31	(1.05)
3636	9.65	(0.90)	13.04	(1.21)
3640	11.12	(1.03)	14.77	(1.37)
3646	12.59	(1.17)	16.50	(1.53)
3650	14.05	(1.31)	18.23	(1.69)
3656	15.52	(1.44)	19.96	(1.85)
3660	16.99	(1.58)	21.69	(2.02)
4010	2.85	(0.27)	5.21	(0.48)
4016	4.57	(0.42)	7.19	(0.67)
4020	6.29	(0.58)	9.17	(0.85)
4026	8.01	(0.74)	11.15	(1.04)
4030	9.73	(0.90)	13.13	(1.22)
4036	11.45	(1.06)	15.11	(1.40)
4040	13.17	(1.22)	17.09	(1.59)
4046	14.88	(1.38)	19.07	(1.77)
4050	16.60	(1.54)	21.05	(1.96)
4056	18.32	(1.70)	23.03	(2.14)
4060	20.04	(1.86)	25.00	(2.32)
4610	3.45	(0.32)	6.07	(0.56)
4616	5.42	(0.50)	8.30	(0.77)
4620	7.38	(0.69)	10.53	(0.98)
4626	9.35	(0.87)	12.76	(1.19)
4630	11.32	(1.05)	14.99	(1.39)
4636	13.29	(1.23)	17.22	(1.60)

Window Number	Glass Area Sq. Ft./(m²)		Overall Window Area Sq. Ft./(m²)	
4640	15.26	(1.42)	19.45	(1.81)
4646	17.23	(1.60)	21.68	(2.01)
4650	19.20	(1.78)	23.91	(2.22)
4656	21.17	(1.97)	26.14	(2.43)
4660	23.13	(2.15)	28.36	(2.64)
5010	4.09	(0.38)	6.98	(0.65)
5016	6.30	(0.59)	9.46	(0.88)
5020	8.52	(0.79)	11.94	(1.11)
5026	10.74	(1.00)	14.42	(1.34)
5030	12.96	(1.20)	16.90	(1.57)
5036	15.18	(1.41)	19.37	(1.80)
5040	17.40	(1.62)	21.85	(2.03)
5046	19.62	(1.82)	24.33	(2.26)
5050	21.84	(2.03)	26.81	(2.49)
5056	24.05	(2.23)	29.29	(2.72)
5060	26.27	(2.44)	31.77	(2.95)
5610	4.77	(0.44)	7.93	(0.74)
5616	7.24	(0.67)	10.66	(0.99)
5620	9.71	(0.90)	13.39	(1.24)
5626	12.18	(1.13)	16.12	(1.50)
5630	14.65	(1.36)	18.85	(1.75)
5636	17.11	(1.59)	21.58	(2.00)
5640	19.58	(1.82)	24.30	(2.26)
5646	22.05	(2.05)	27.03	(2.51)
5650	24.52	(2.28)	29.76	(2.77)
5656	26.99	(2.51)	32.49	(3.02)
5660	29.46	(2.74)	35.22	(3.27)
6010	5.50	(0.51)	8.93	(0.83)
6016	8.22	(0.76)	11.91	(1.11)
6020	10.94	(1.02)	14.88	(1.38)
6026	13.66	(1.27)	17.86	(1.66)
6030	16.38	(1.52)	20.84	(1.94)
6036	19.09	(1.77)	23.82	(2.21)
6040	21.81	(2.03)	26.80	(2.49)
6046	24.53	(2.28)	29.78	(2.77)
6050	27.25	(2.53)	32.76	(3.04)
6056	29.97	(2.78)	35.74	(3.32)
6060	32.69	(3.04)	38.72	(3.60)
6610	6.27	(0.58)	9.97	(0.93)
6616	9.24	(0.86)	13.20	(1.23)
6620	12.21	(1.13)	16.43	(1.53)
6626	15.18	(1.41)	19.66	(1.83)
6630	18.15	(1.69)	22.88	(2.13)
6636	21.12	(1.96)	26.11	(2.43)
6640	24.09	(2.24)	29.34	(2.73)
6646	27.06	(2.51)	32.57	(3.03)
6650	30.02	(2.79)	35.80	(3.33)
6656	32.99	(3.07)	39.03	(3.63)
6660	35.96	(3.34)	42.26	(3.93)
7010	7.10	(0.66)	11.05	(1.03)
7016	10.31	(0.96)	14.53	(1.35)
7020	13.53	(1.26)	18.01	(1.67)
7026	16.75	(1.56)	21.49	(2.00)
7030	19.97	(1.86)	24.97	(2.32)
7036	23.19	(2.15)	28.45	(2.64)
7040	26.41	(2.45)	31.93	(2.97)
7046	29.63	(2.75)	35.41	(3.29)
7050	32.85	(3.05)	38.89	(3.61)
7056	36.06	(3.35)	42.37	(3.94)
7060	39.28	(3.65)	45.85	(4.26)
7610	7.96	(0.74)	12.19	(1.13)

Window Number	Glass Area Sq. Ft./(m²)		Overall Window Area Sq. Ft./(m²)	
7616	11.43	(1.06)	15.92	(1.48)
7620	14.90	(1.38)	19.64	(1.83)
7626	18.37	(1.71)	23.37	(2.17)
7630	21.84	(2.03)	27.10	(2.52)
7636	25.30	(2.35)	30.83	(2.86)
7640	28.77	(2.67)	34.56	(3.21)
7646	32.24	(3.00)	38.29	(3.56)
7650	35.71	(3.32)	42.02	(3.90)
7656	39.18	(3.64)	45.75	(4.25)
7660	42.65	(3.96)	49.48	(4.60)
8010	8.87	(0.82)	13.36	(1.24)
8016	12.59	(1.17)	17.34	(1.61)
8020	16.31	(1.52)	21.32	(1.98)
8026	20.03	(1.86)	25.30	(2.35)
8030	23.75	(2.21)	29.28	(2.72)
8036	27.47	(2.55)	33.26	(3.09)
8040	31.18	(2.90)	37.24	(3.46)
8046	34.90	(3.24)	41.22	(3.83)
8050	38.62	(3.59)	45.20	(4.20)
8056	42.34	(3.93)	49.18	(4.57)
8060	46.06	(4.28)	53.16	(4.94)

• Dimensions in parentheses are in square meters.

For picture, transom, half circle, quarter circle, circle and Springline™ window specifications, see pages 70-73.

Picture, Transom and Specialty Window Details – New Construction

Scale 1 1/2" (38) = 1'-0" (305) – 1:8

1 3/8" Flange Setback

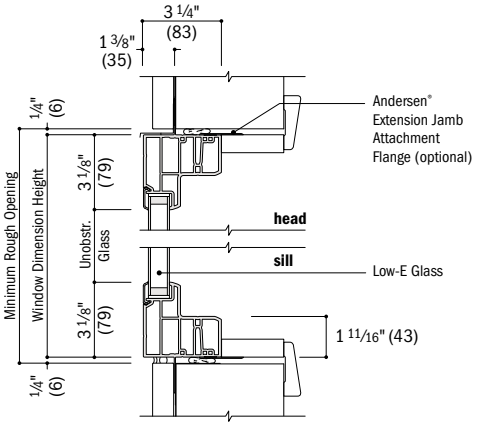

Vertical Section

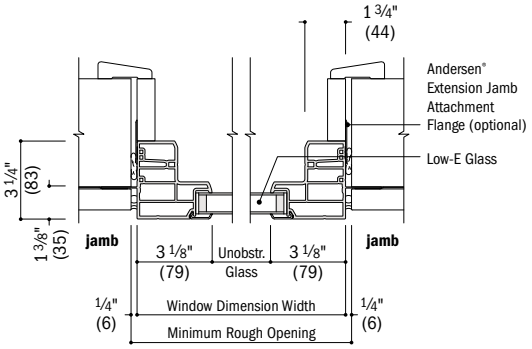

Horizontal Section

1" Flange Setback With Stucco Key

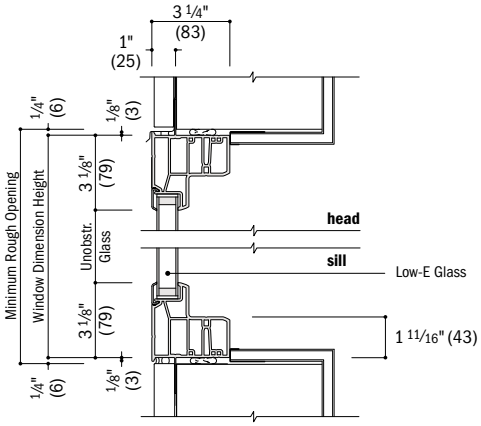

Vertical Section
Stucco Exterior

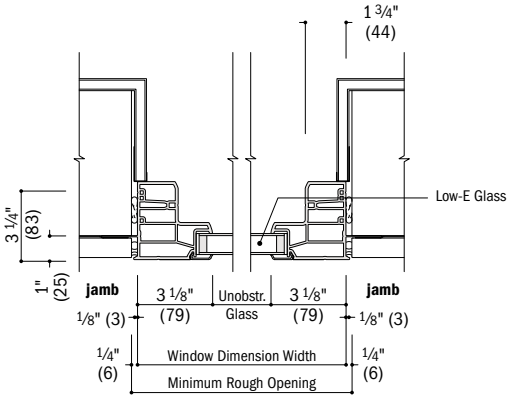

Horizontal Section
Stucco Exterior

- Light-colored areas are parts included with window. Dark-colored areas are additional Andersen® parts required to complete window assembly as shown.
- **Minimum rough openings may need to be increased to allow for use of building wraps, flashing, sill panning, brackets, fasteners or other items. See installation information on page 121.**
- Drip cap is required to complete window installation as shown but may not be included with window. Use of drip cap is recommended for proper installation.
- Details are for illustration only and are not intended to represent product installation methods or materials. Refer to product installation instructions at andersenwindows.com.
- Dimensions in parentheses are in millimeters.

Picture, Transom and Specialty Window Details – Replacement

Scale 1 1/2" (38) = 1'-0" (305) – 1:8

No Flange

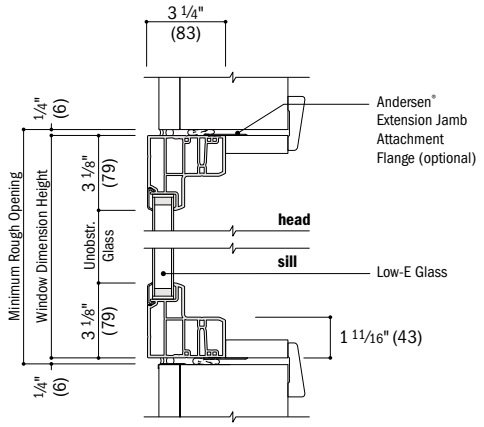

Vertical Section
Existing Framed Opening

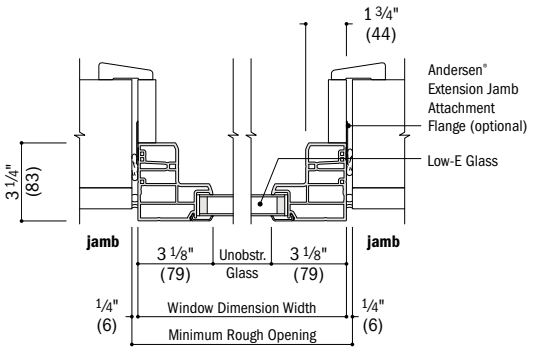

Horizontal Section
Existing Framed Opening

Insert

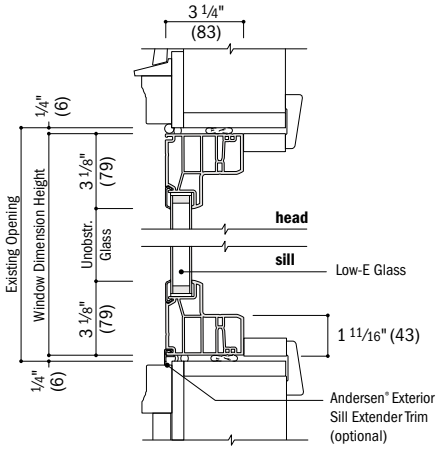

Vertical Section
Existing Window Opening

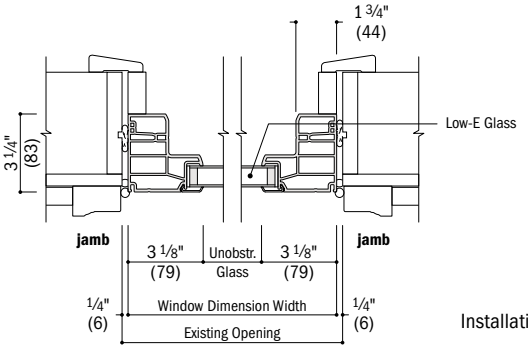

Horizontal Section
Existing Window Opening

Installation accessories are available for windows with insert and flush fin frames; see page 120.

See pages 88-93 for joining details.

Flush Fin*

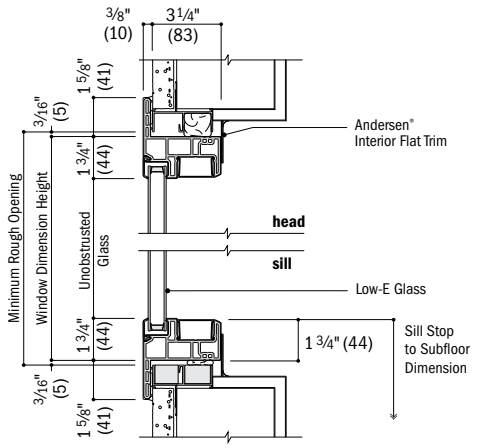

Vertical Section
Existing Aluminum Frame Window Opening

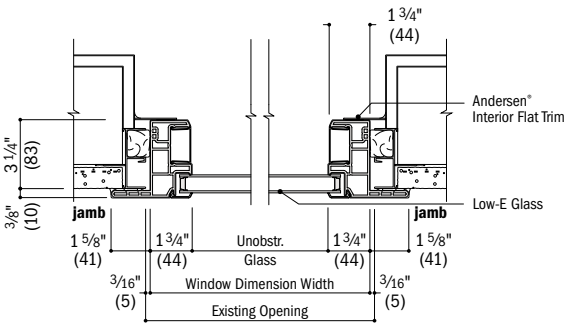

Horizontal Section
Existing Aluminum Frame Window Opening

- Light-colored areas are parts included with window. Dark-colored areas are additional Andersen® parts required to complete window assembly as shown.
- **Minimum rough openings may need to be increased to allow for use of building wraps, flashing, sill panning, brackets, fasteners or other items. See installation information on page 121.**
- Details are for illustration only and are not intended to represent product installation methods or materials. Refer to product installation instructions at andersenwindows.com.
- Dimensions in parentheses are in millimeters.

*Windows with flush fin frame are available in select Southwestern states including Arizona, California, Nevada, New Mexico and Utah. Limited configuration availability. See your Andersen supplier for more information.

Twin and Triple Transom Window Details – New Construction

Scale 1 1/2" (38) = 1'-0" (305) – 1:8

1 3/8" Flange Setback

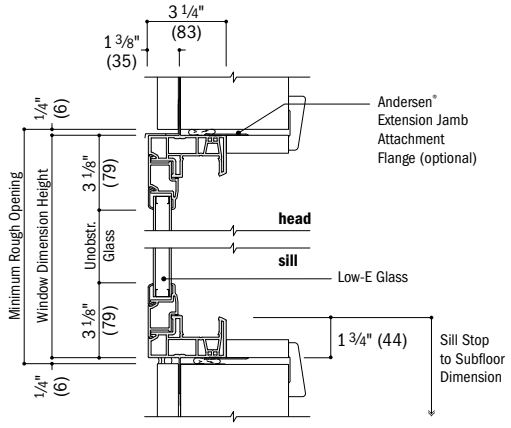

Vertical Section

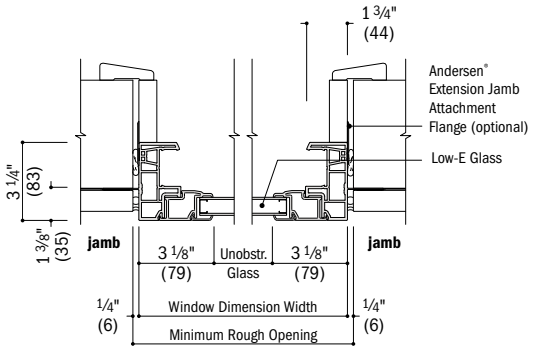

Horizontal Section

1" Flange Setback With Stucco Key

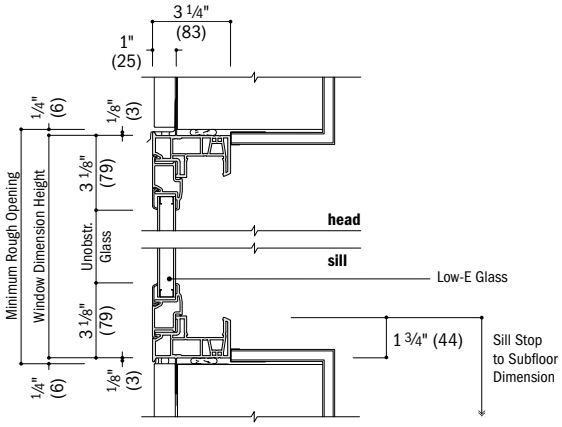

Vertical Section
Stucco Exterior

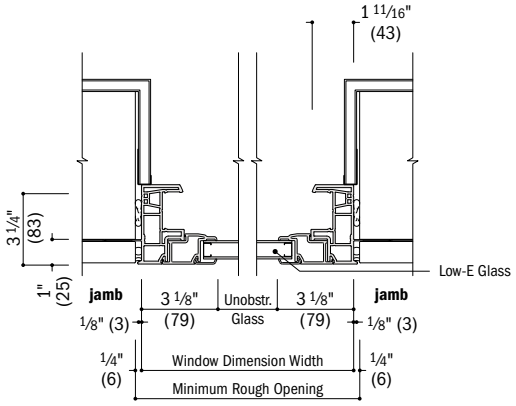

Horizontal Section
Stucco Exterior

Integral

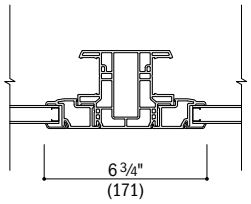

Horizontal Section
Twin/Triple Transom

- Light-colored areas are parts included with window. Dark-colored areas are additional Andersen® parts required to complete window assembly as shown.
- **Minimum rough openings may need to be increased to allow for use of building wraps, flashing, sill panning, brackets, fasteners or other items. See installation information on page 121.**
- Drip cap is required to complete window installation as shown but may not be included with window. Use of drip cap is recommended for proper installation.
- Details are for illustration only and are not intended to represent product installation methods or materials. Refer to product installation instructions at andersenwindows.com.
- Dimensions in parentheses are in millimeters.

Twin and Triple Transom Window Details – Replacement

Scale 1 1/2" (38) = 1'-0" (305) – 1:8

No Flange

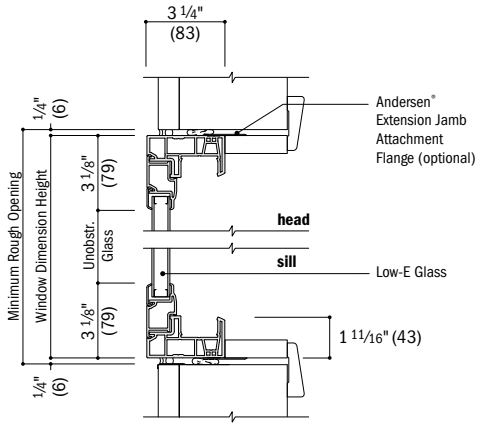

Vertical Section
Existing Framed Opening

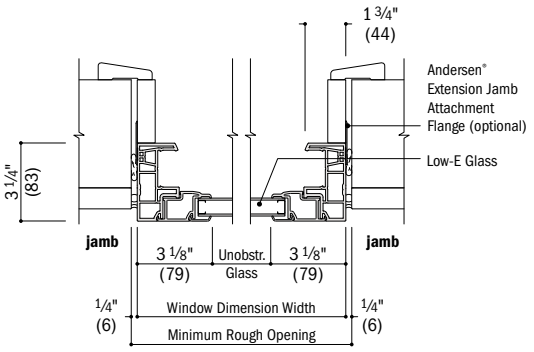

Horizontal Section
Existing Framed Opening

Insert

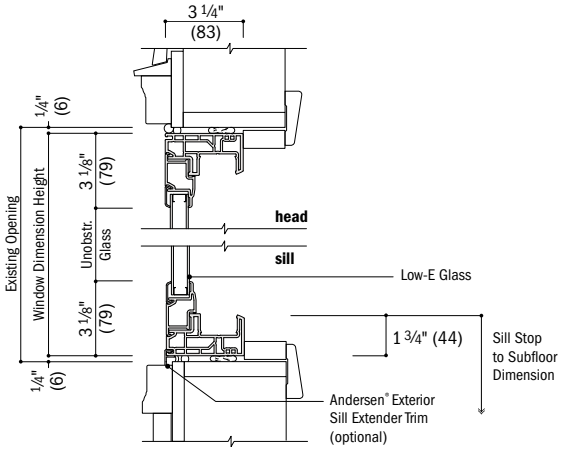

Vertical Section
Existing Window Opening

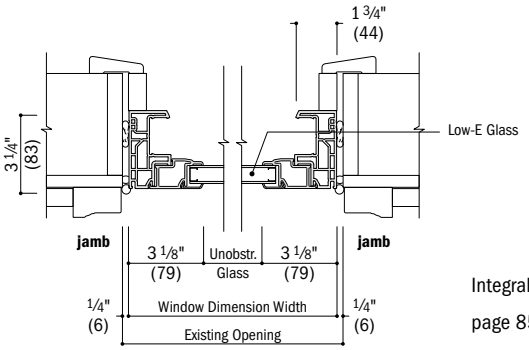

Horizontal Section
Existing Window Opening

Integral detail shown on page 85. Installation accessories are available for windows with insert and flush fin frames; see page 120.

See pages 88-93 for joining details.

Flush Fin*

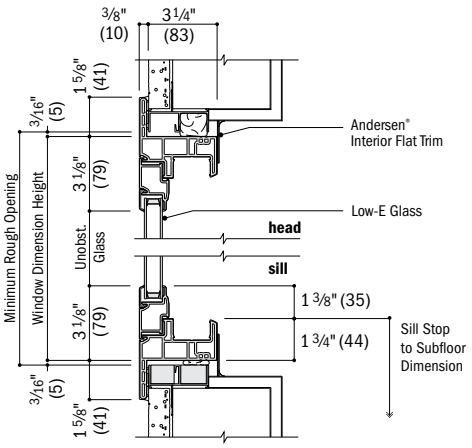

Vertical Section
Existing Aluminum Frame Window Opening

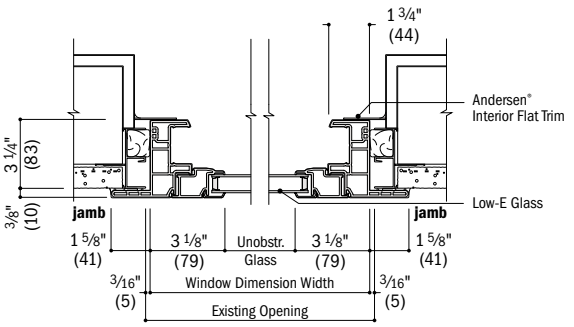

Horizontal Section
Existing Aluminum Frame Window Opening

• Light-colored areas are parts included with window. Dark-colored areas are additional Andersen® parts required to complete window assembly as shown.
• **Minimum rough openings may need to be increased to allow for use of building wraps, flashing, sill panning, brackets, fasteners or other items. See installation information on page 121.**
• Details are for illustration only and are not intended to represent product installation methods or materials. Refer to product installation instructions at andersenwindows.com.
• Dimensions in parentheses are in millimeters.
*Windows with flush fin frame are available in select Southwestern states including Arizona, California, Nevada, New Mexico and Utah. Limited configuration availability. See your Andersen supplier for more information.

Vertical (ribbon) Fiberglass Joining Details – Non-Reinforced

Scale 1 1/2" (38) = 1'-0" (305) — 1:8

Overall Window Dimension Width – Sum of individual window widths plus 1/2" (13) per join.

Overall Minimum Rough Opening Width – Overall window dimension width plus 3/4" (19).

The addition of joining materials will affect the overall rough opening dimension. See page 121.

FRAME TYPES: 1 3/8" Flange Setback, 1" Flange Setback With Stucco Key, No Flange and Insert

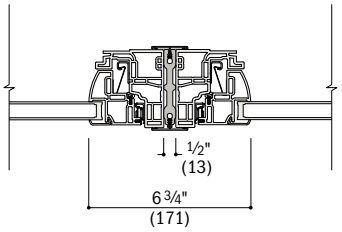

Casement to Casement
(Stationary Jamb to Stationary Jamb)

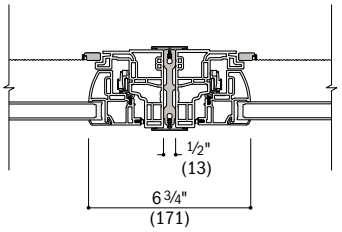

Casement to Casement
(Lock Jamb to Lock Jamb)

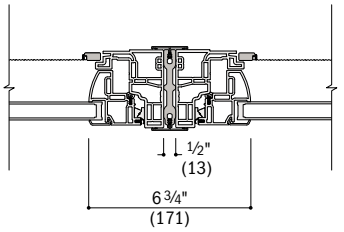

Casement to Casement
(Hinge Jamb to Hinge Jamb)

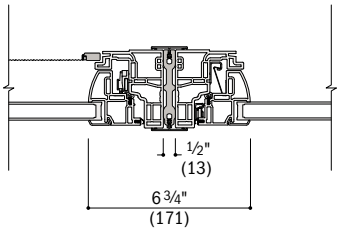

Casement to Casement
(Lock Jamb to Stationary Jamb)

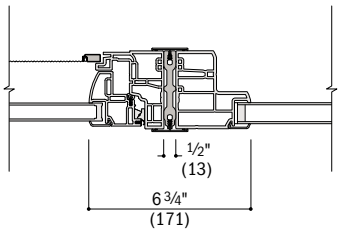

Casement to Picture
(Casement Hinge Jamb)

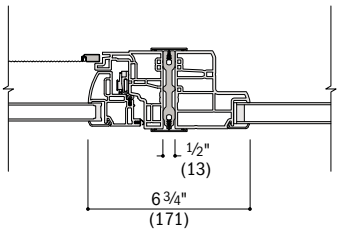

Casement to Picture
(Casement Lock Jamb)

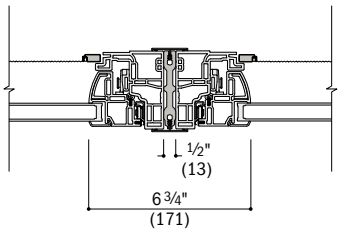

Awning to Awning

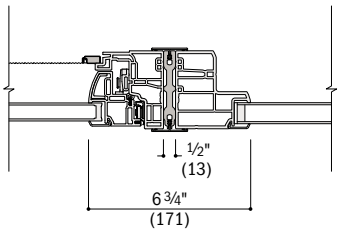

Awning to Picture

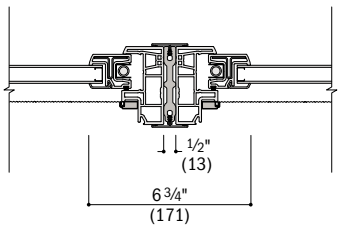

Single-Hung to Single-Hung

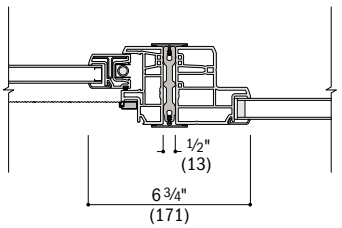

Single-Hung to Picture

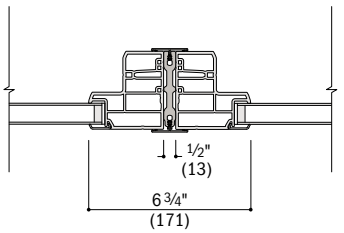

Picture to Picture

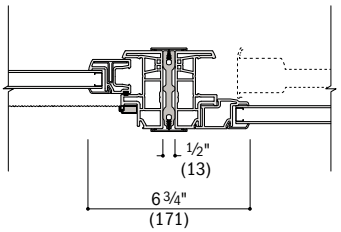

Gliding to Gliding
(Active Jamb to Stationary Jamb)

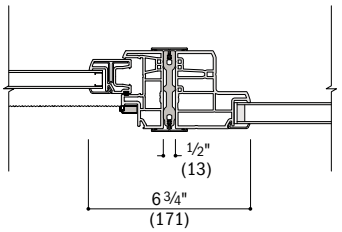

Gliding to Picture
(Gliding Active Jamb)

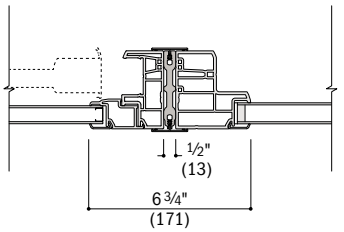

Gliding to Picture
(Gliding Stationary Jamb)

- Light-colored areas are parts included with window. Dark-colored areas are additional Andersen® parts required to complete window assembly as shown.
- **Minimum rough openings may need to be increased to allow for use of building wraps, flashing, sill panning, brackets, fasteners or other items. See installation information on page 121.**
- Details are for illustration only and are not intended to represent product installation methods or materials. Refer to product installation instructions at andersenwindows.com.
- Structural performance of any combination is only as high as the lowest structural performance of any individual product or join in the combination.
- Dimensions in parentheses are in millimeters.

Horizontal (stack) Fiberglass Joining Details – Non-Reinforced

Scale 1 1/2" (38) = 1'-0" (305) – 1:8

Overall Window Dimension Width – Sum of individual window widths plus 1/2" (13) per join.

Overall Minimum Rough Opening Width – Overall window dimension width plus 3/4" (19).

The addition of joining materials will affect the overall rough opening dimension. See page 121.

FRAME TYPES: 1 3/8" Flange Setback, 1" Flange Setback With Stucco Key, No Flange and Insert

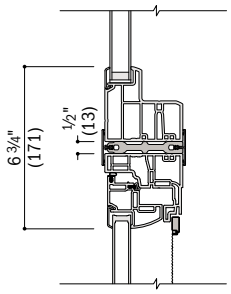

Picture/Specialty Over Casement

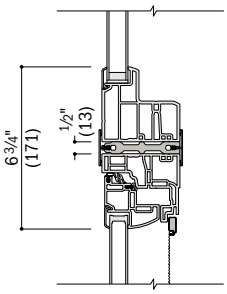

Picture/Specialty Over Awning

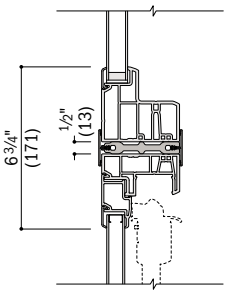

Picture/Specialty Over Single-Hung

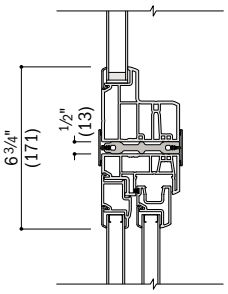

Picture/Specialty Over Gliding

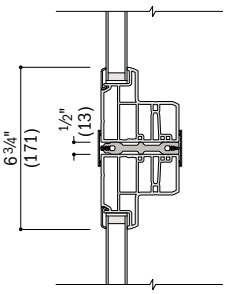

Picture/Specialty Over Picture

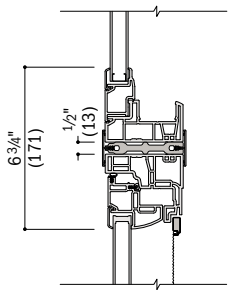

Transom Over Casement

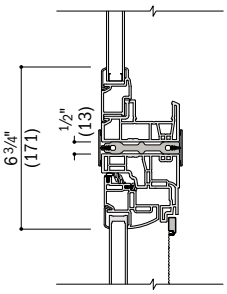

Transom Over Awning

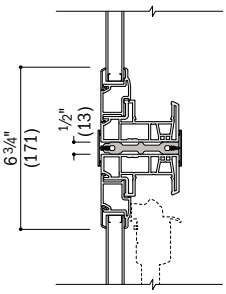

Transom Over Single-Hung

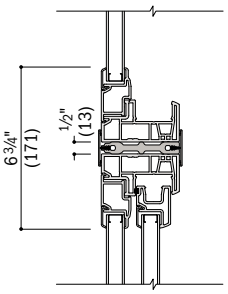

Transom Over Gliding

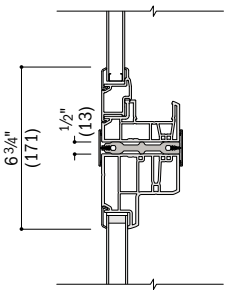

Transom Over Picture

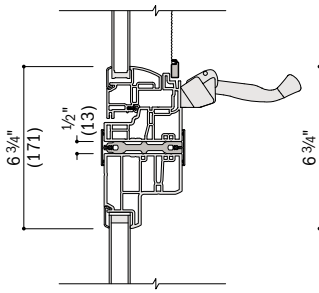

Casement Over Picture

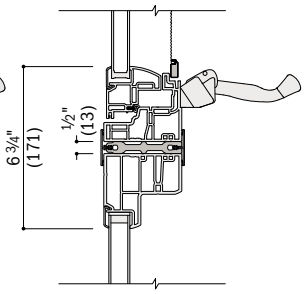

Awning Over Picture

For more information on joining, refer to the Combination Designs section starting on page 107.

- Light-colored areas are parts included with window. Dark-colored areas are additional Andersen® parts required to complete window assembly as shown.
- **Minimum rough openings may need to be increased to allow for use of building wraps, flashing, sill panning, brackets, fasteners or other items. See installation information on page 121.**
- Details are for illustration only and are not intended to represent product installation methods or materials. Refer to product installation instructions at andersenwindows.com.
- Structural performance of any combination is only as high as the lowest structural performance of any individual product or join in the combination.
- Dimensions in parentheses are in millimeters.

WINDOW JOINING DETAILS

Vertical (ribbon) Fiberglass Joining Details – Non-Reinforced

Scale 1 1/2" (38) = 1'-0" (305) — 1:8

Overall Window Dimension Width – Sum of individual window widths plus 1/2" (13) per join.

Overall Minimum Rough Opening Width – Overall window dimension width plus 3/4" (19).

The addition of joining materials will affect the overall rough opening dimension. See page 121.

FRAME TYPE: Flush Fin*

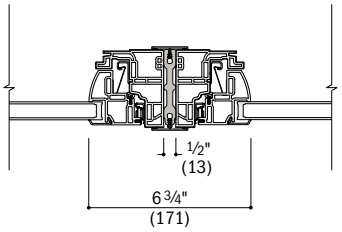

Casement to Casement
(Stationary Jamb to Stationary Jamb)

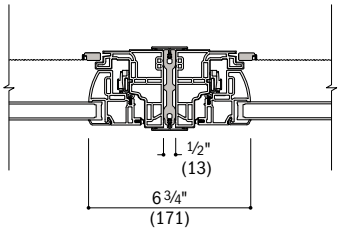

Casement to Casement
(Lock Jamb to Lock Jamb)

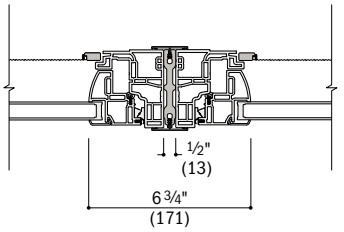

Casement to Casement
(Hinge Jamb to Hinge Jamb)

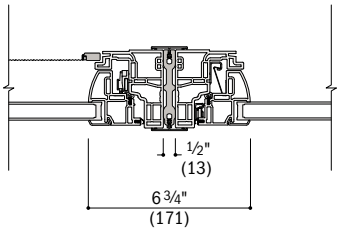

Casement to Casement
(Lock Jamb to Stationary Jamb)

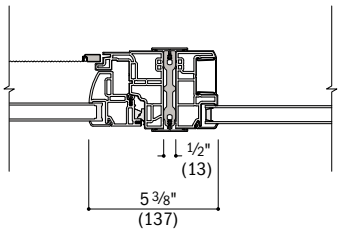

Casement to Picture
(Casement Hinge Jamb)

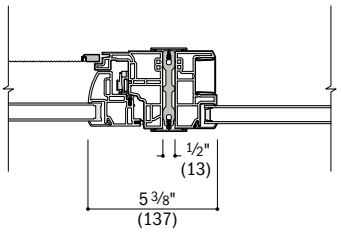

Casement to Picture
(Casement Lock Jamb)

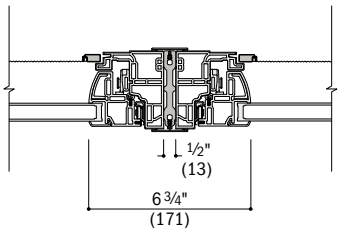

Awning to Awning

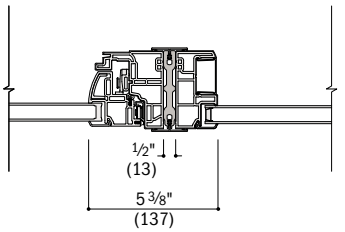

Awning to Picture

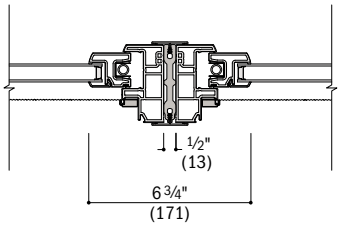

Single-Hung to Single-Hung

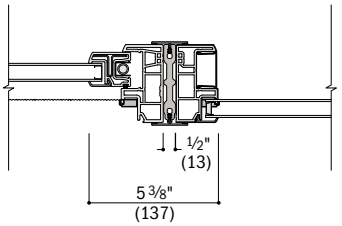

Single-Hung to Picture

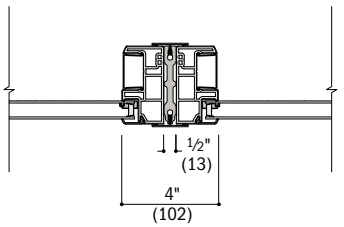

Picture to Picture

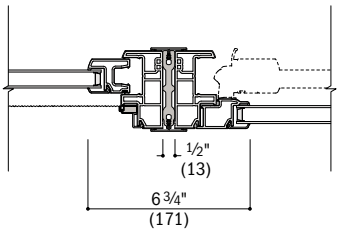

Gliding to Gliding
(Active Jamb to Stationary Jamb)

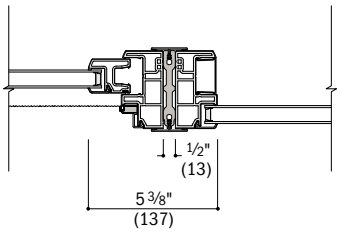

Gliding to Picture
(Gliding Active Jamb)

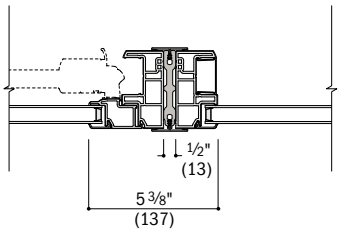

Gliding to Picture
(Gliding Stationary Jamb)

- Light-colored areas are parts included with window. Dark-colored areas are additional Andersen® parts required to complete window assembly as shown.
- **Minimum rough openings may need to be increased to allow for use of building wraps, flashing, sill panning, brackets, fasteners or other items. See installation information on pages 121.**
- Details are for illustration only and are not intended to represent product installation methods or materials. Refer to product installation instructions at andersenwindows.com.
- Structural performance of any combination is only as high as the lowest structural performance of any individual product or join in the combination.
- Dimensions in parentheses are in millimeters.

*Windows with flush fin frame are available in select Southwestern states including Arizona, California, Nevada, New Mexico and Utah. Limited configuration availability. See your Andersen supplier for more information.

Horizontal (stack) Fiberglass Joining Details – Non-Reinforced

Scale 1 1/2" (38) = 1'-0" (305) – 1:8

Overall Window Dimension Width – Sum of individual window widths plus 1/2" (13) per join.

Overall Minimum Rough Opening Width – Overall window dimension width plus 3/4" (19).

The addition of joining materials will affect the overall rough opening dimension. See page 121.

FRAME TYPE: Flush Fin*

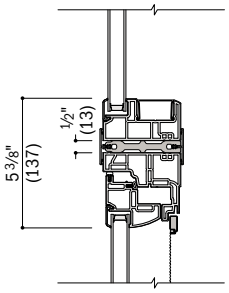

Picture/Specialty Over Casement

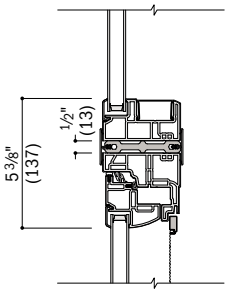

Picture/Specialty Over Awning

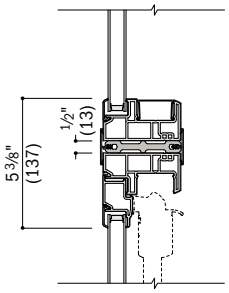

Picture/Specialty Over Single-Hung

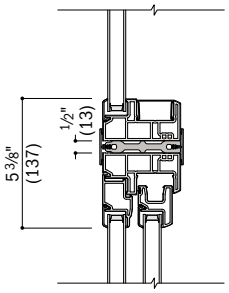

Picture/Specialty Over Gliding

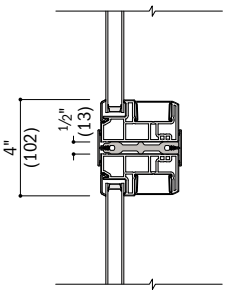

Picture/Specialty Over Picture

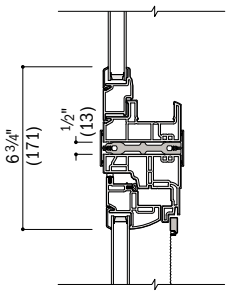

Transom Over Casement

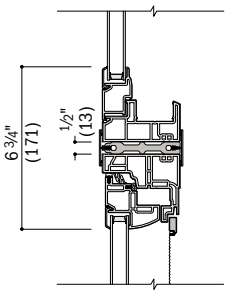

Transom Over Awning

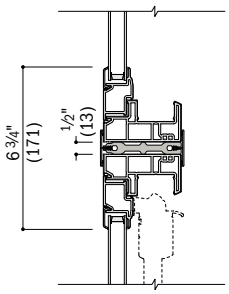

Transom Over Single-Hung

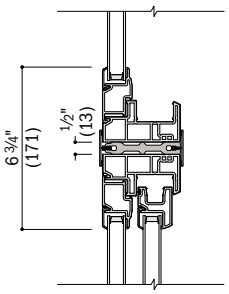

Transom Over Gliding

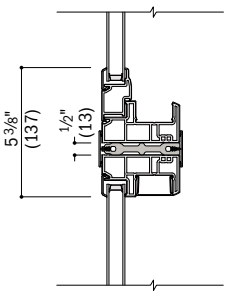

Transom Over Picture

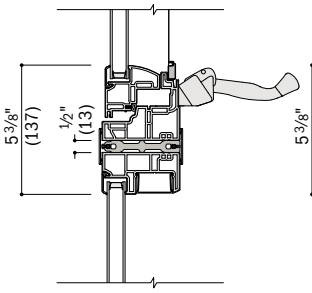

Casement Over Picture

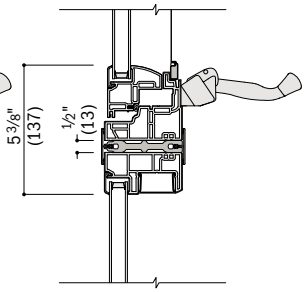

Awning Over Picture

For more information on joining, refer to the Combination Designs section starting on page 107.

- Light-colored areas are parts included with window. Dark-colored areas are additional Andersen® parts required to complete window assembly as shown.
- **Minimum rough openings may need to be increased to allow for use of building wraps, flashing, sill panning, brackets, fasteners or other items. See installation information on page 121.**
- Details are for illustration only and are not intended to represent product installation methods or materials. Refer to product installation instructions at andersenwindows.com.
- Structural performance of any combination is only as high as the lowest structural performance of any individual product or join in the combination.
- Dimensions in parentheses are in millimeters.

*Windows with flush fin frame are available in select Southwestern states including Arizona, California, Nevada, New Mexico and Utah. Limited configuration availability. See your Andersen supplier for more information.

Vertical (ribbon) Easy Connect Fiberglass Joining Details – Reinforced

Scale 1 1/2" (38) = 1'-0" (305) — 1:8

Overall Window Dimension Width – Sum of individual window widths plus 3/4" (19) per join.

Overall Minimum Rough Opening Width – Overall window dimension width plus 3/4" (19).

The addition of joining materials will affect the overall rough opening dimension. See page 121.

FRAME TYPES: 1 3/8" Flange Setback, 1" Flange Setback With Stucco Key and No Flange

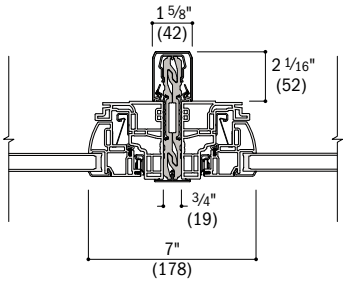

Casement to Casement
(Stationary Jamb to Stationary Jamb)

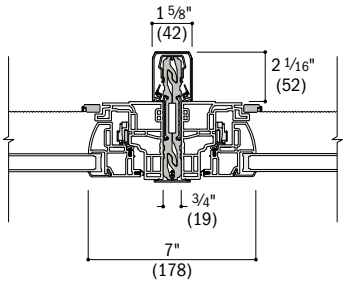

Casement to Casement
(Lock Jamb to Lock Jamb)

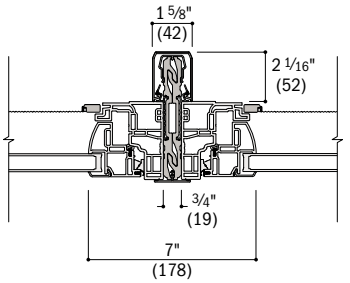

Casement to Casement
(Hinge Jamb to Hinge Jamb)

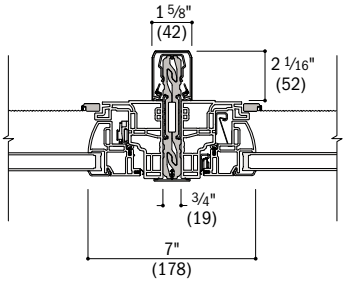

Casement to Casement
(Lock Jamb to Stationary Jamb)

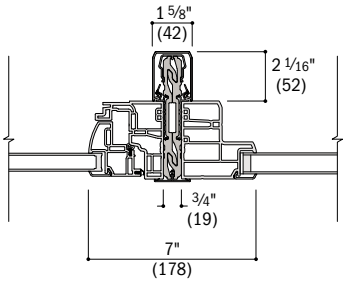

Casement to Picture
(Casement Hinge Jamb)

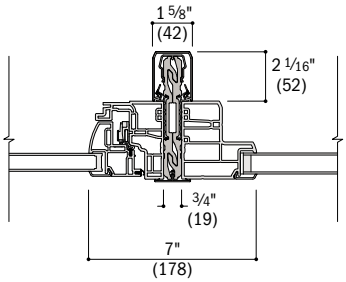

Casement to Picture
(Casement Lock Jamb)

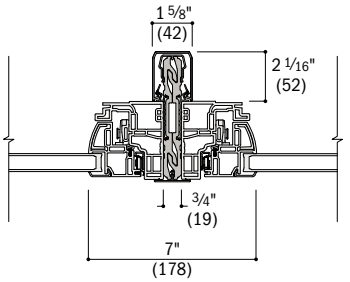

Awning to Awning

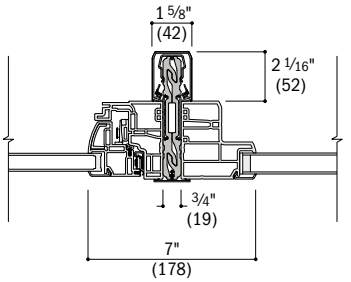

Awning to Picture

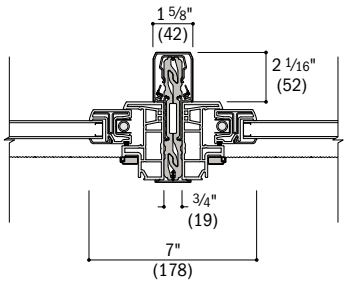

Single-Hung to Single-Hung

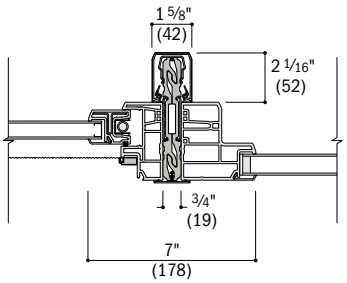

Single-Hung to Picture

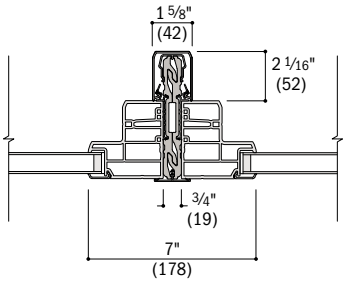

Picture to Picture

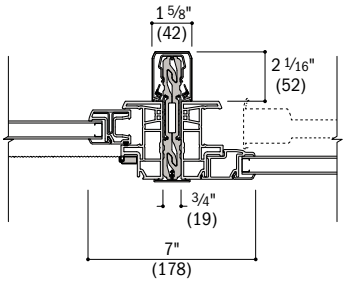

Gliding to Gliding
(Active Jamb to Stationary Jamb)

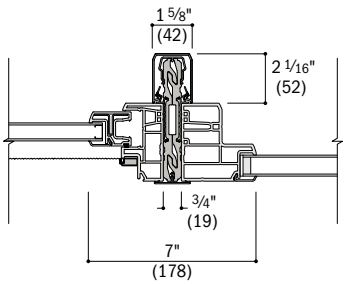

Gliding to Picture
(Gliding Active Jamb)

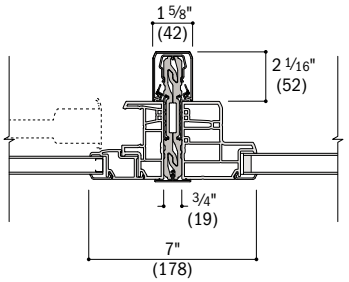

Gliding to Picture
(Gliding Stationary Jamb)

- Light-colored areas are parts included with window. Dark-colored areas are additional Andersen® parts required to complete window assembly as shown.
- **Minimum rough openings may need to be increased to allow for use of building wraps, flashing, sill panning, brackets, fasteners or other items. See installation information on page 121.**
- Details are for illustration only and are not intended to represent product installation methods or materials. Refer to product installation instructions at andersenwindows.com.
- Structural performance of any combination is only as high as the lowest structural performance of any individual product or join in the combination.
- Dimensions in parentheses are in millimeters.

Horizontal (stack) Easy Connect Fiberglass Joining Details – Reinforced

Scale 1 1/2" (38) = 1'-0" (305) — 1:8

Overall Window Dimension Width – Sum of individual window widths plus 3/4" (19) per join.

Overall Minimum Rough Opening Width – Overall window dimension width plus 3/4" (19).

The addition of joining materials will affect the overall rough opening dimension. See page 121.

FRAME TYPES: 1 3/8" Flange Setback, 1" Flange Setback With Stucco Key and No Flange

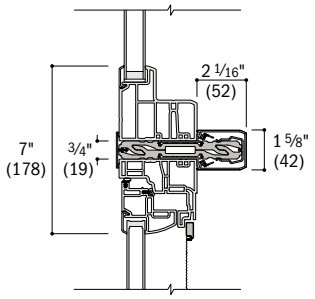

Picture/Specialty Over Casement

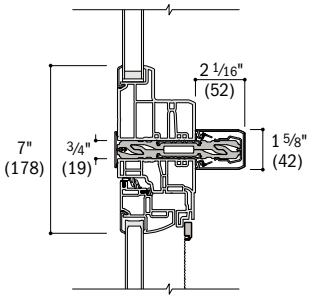

Picture/Specialty Over Awning

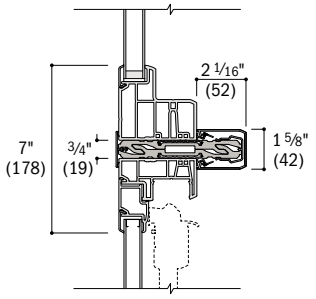

Picture/Specialty Over Single-Hung

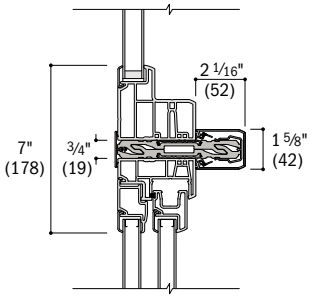

Picture/Specialty Over Gliding

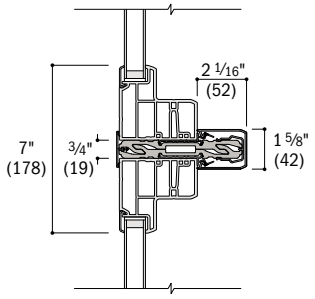

Picture/Specialty Over Picture

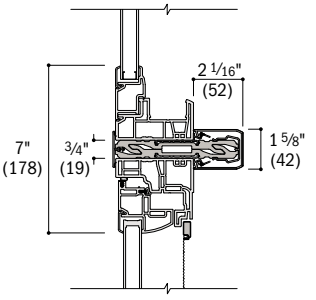

Transom Over Casement

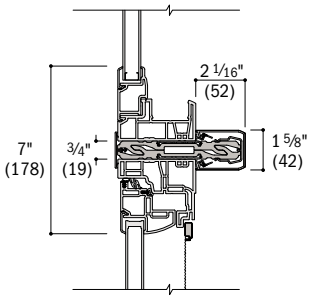

Transom Over Awning

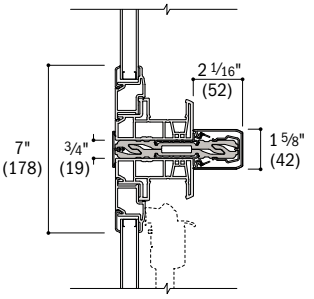

Transom Over Single-Hung

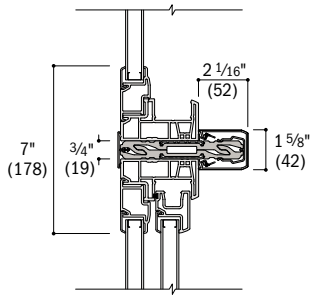

Transom Over Gliding

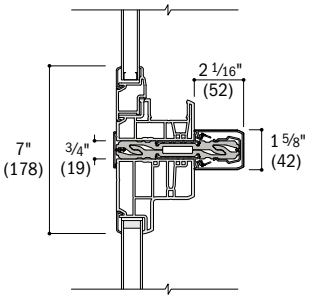

Transom Over Picture

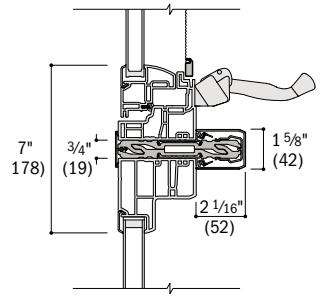

Casement Over Picture

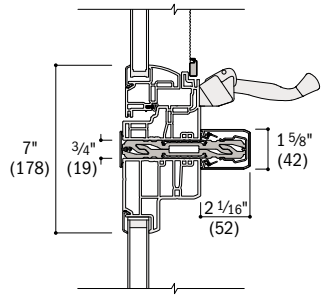

Awning Over Picture

For more information on joining, refer to the Combination Designs section starting on page 107.

- Light-colored areas are parts included with window. Dark-colored areas are additional Andersen® parts required to complete window assembly as shown.
- **Minimum rough openings may need to be increased to allow for use of building wraps, flashing, sill panning, brackets, fasteners or other items.**
- Details are for illustration only and are not intended to represent product installation methods or materials. Refer to product installation instructions at andersenwindows.com.
- Structural performance of any combination is only as high as the lowest structural performance of any individual unit or join in the combination.
- Dimensions in parentheses are in millimeters.

WINDOW CUSTOM SIZES

Custom Sizes and Specification Formulas

100 Series custom-size windows are available in 1/8" (3) increments between minimum and maximum widths and heights shown. Some restrictions apply.

Casement Windows

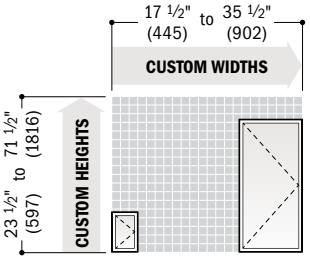

Single

Clear Opening	**Width** = window width − 12.103" (307) *wash mode** **Width** = window width − 7.790" (198) *widest clear opening** **Height** = window height − 5.694" (145)	**Minimum R.O.**	**1 3/8" & 1" Flange Setback Frames** **Width** = window width + 1/2" (13) **Height** = window height + 1/2" (13) **Insert & Flush Fin Frames** **Width** = window width + 3/8" (10) **Height** = window height + 3/8" (10)
Vent Opening	**Width** = window width − 7.964" (202) **Height** = window height − 5.694" (145)	**Unobst. Glass**	**Width** = window width − 6.250" (159) **Height** = window height − 6.250" (159)

*Widest clear opening hinge will be applied, based on window size, if it allows the window to meet or exceed clear opening area of 5.7 sq. ft. or 0.53 m², clear opening width of 20" (508) and clear opening height of 24" (610). Hinge type cannot be specified.

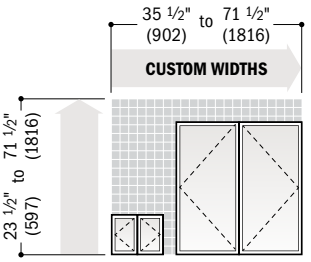

Twin

Clear Opening	**Width** = (window width ÷ 2) − 12.353" (314) *wash mode** **Width** = (window width ÷ 2) − 8.040" (204) *widest clear opening** **Height** = window height − 5.694" (145)	**Minimum R.O.**	**1 3/8" & 1" Flange Setback Frames** **Width** = window width + 1/2" (13) **Height** = window height + 1/2" (13) **Insert & Flush Fin Frames** **Width** = window width + 3/8" (10) **Height** = window height + 3/8" (10)
Vent Opening	**Width** = window width − 16.428" (417) **Height** = window height − 5.694" (145)	**Unobst. Glass**	**Single Sash Width** = (window width ÷ 2) − 6.50" (165) **Total Sash Width** = window width − 13.000" (330) **Height** = window height − 6.250" (159)

*Widest clear opening hinge will be applied, based on window size, if it allows the window to meet or exceed clear opening area of 5.7 sq. ft. or 0.53 m², clear opening width of 20" (508) and clear opening height of 24" (610). Hinge type cannot be specified.

• **Clear Opening** formulas provide dimensions for determining area available for egress. **Vent Opening** formulas provide dimensions for determining area available for passage of air. **Minimum R.O.** (minimum rough opening) formulas provide minimum rough opening width and height dimensions. **Unobst. Glass** (unobstructed glass) formulas provide dimensions for determining area available for passage of light.
• Dimensions in parentheses are in millimeters.
• Windows with flush fin frame are available in select Southwestern states including Arizona, California, Nevada, New Mexico and Utah. Limited configuration availability. See your Andersen supplier for more information.

Awning Windows

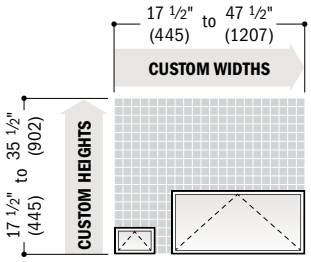

Single

Clear Opening	**Width** = window width − 5.694" (145) **Depth** = 8.000" (203)	**Minimum R.O.**	**1 3/8" & 1" Flange Setback Frames** **Width** = window width + 1/2" (13) **Height** = window height + 1/2" (13) **Insert & Flush Fin Frames** **Width** = window width + 3/8" (10) **Height** = window height + 3/8" (10)
Vent Opening	**Width** = window width − 5.694" (145) **Depth** = 8.000" (203)	**Unobst. Glass**	**Width** = window width − 6.250" (159) **Height** = window height − 6.250" (159)

• Awning windows do not meet clear opening area of 5.7 sq.ft. or 0.53 m², clear opening width of 20" (508) and clear opening height of 24" (610).

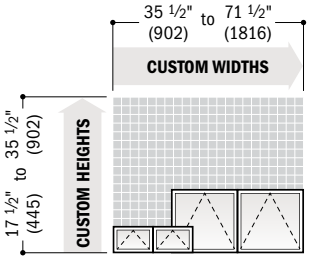

Twin

Clear Opening	**Width** = (window width ÷ 2) − 5.944" (151) **Depth** = 8.000" (203)	**Minimum R.O.**	**1 3/8" & 1" Flange Setback Frames** **Width** = window width + 1/2" (13) **Height** = window height + 1/2" (13) **Insert & Flush Fin Frames** **Width** = window width + 3/8" (10) **Height** = window height + 3/8" (10)
Vent Opening	**Width** = (window width ÷ 2) − 5.944" (151) **Depth** = 8.000" (203)	**Unobst. Glass**	**Single Sash Width** = (window width ÷ 2) − 6.50" (165) **Total Sash Width** = window width − 13.000" (330) **Height** = window height − 6.250" (159)

• Awning windows do not meet clear opening area of 5.7 sq.ft. or 0.53 m², clear opening width of 20" (508) and clear opening height of 24" (610).

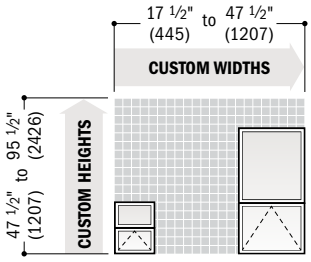

Contact your Andersen supplier for minimum and maximum height dimensions for lower venting sash.

Picture Window Over Awning

Clear Opening	**Width** = window width − 5.694" (145) **Depth** = 8.000" (203)	**Minimum R.O.**	**1 3/8" & 1" Flange Setback Frames** **Width** = window width + 1/2" (13) **Height** = window height + 1/2" (13) **Insert & Flush Fin Frames** **Width** = window width + 3/8" (10) **Height** = window height + 3/8" (10)
Vent Opening	**Width** = window width − 5.694" (145) **Depth** = 8.000" (203)	**Unobst. Glass**	**Width** = window width − 6.250" (159) **Total Sash Height** = window height − 13.000" (330) *Contact your Andersen supplier for unobstructed glass height dimension of individual stationary sash or venting sash.*

• **Clear Opening** formulas provide dimensions for determining area available for egress. **Vent Opening** formulas provide dimensions for determining area available for passage of air. **Minimum R.O.** (minimum rough opening) formulas provide minimum rough opening width and height dimensions. **Unobst. Glass** (unobstructed glass) formulas provide dimensions for determining area available for passage of light.
• Dimensions in parentheses are in millimeters.
• Windows with flush fin frame are available in select Southwestern states including Arizona, California, Nevada, New Mexico and Utah. Limited configuration availability. See your Andersen supplier for more information.

WINDOW CUSTOM SIZES

Single-Hung Windows

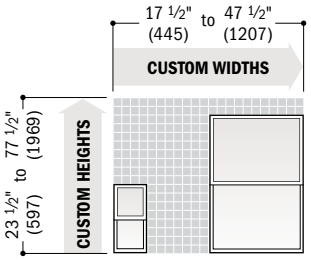

! Windows with a height greater than 77 1/2" (1969) are only available with a 2:1 reverse cottage sash ratio.*

2:1 sash ratio is not available for heights 6'-5 1/2" (1969) and less.

Equal Sash Ratio

Clear Opening	**Width** = window width − 3.500" (89) **Height** = (window height ÷ 2) − 3.711" (94)	**Minimum R.O.**	**1 3/8" & 1" Flange Setback Frames** **Width** = window width + 1/2" (13) **Height** = window height + 1/2" (13) **Insert & Flush Fin Frames** **Width** = window width + 3/8" (10) **Height** = window height + 3/8" (10)
Vent Opening	**Equal Sash Ratio** **Width** = window width − 3.500" (89) **Height** = (window height ÷ 2) − 3.711" (94)	**Unobst. Glass**	**Equal Sash Ratio** **Width** = window width − 6.250" (159) **Fixed Sash Height** = (window height ÷ 2) − 4.184" (106) **Venting Sash Height** = (window height ÷ 2) − 4.226" (107) **Total Sash Height** = window height − 8.410" (214)

• Drywall pass-through window is available for custom-size windows wider than 23 1/2" (597) and taller than 53 1/2" (1359). Not available for windows with flush fin frame.
• Windows with a 3:2 reverse cottage sash ratio are available in custom sizes from 17 1/2" (445) to 47 1/2" (1207) in width to 29 1/2" (749) to 77 1/2" (1969) in height. For area and opening specification formulas, visit andersenwindows.com.

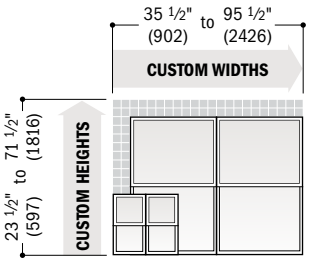

Twin

Clear Opening	**Width** = (window width ÷ 2) − 3.750" (95) **Height** = (window height ÷ 2) − 3.711" (94))	**Minimum R.O.**	**1 3/8" & 1" Flange Setback Frames** **Width** = window width + 1/2" (13) **Height** = window height + 1/2" (13) **Insert & Flush Fin Frames** **Width** = window width + 3/8" (10) **Height** = window height + 3/8" (10)
Vent Opening	**Equal Sash Ratio** **Width** = window width − 3.500" (89) **Height** = (window height ÷ 2) − 3.711" (94)	**Unobst. Glass**	**Single Sash Width** = (window width ÷ 2) − 6.500" (165) **Total Sash Width** = window width − 13.000" (330) **Fixed Sash Height** = (window height ÷ 2) − 4.184" (106) **Venting Sash Height** = (window height ÷ 2) − 4.226" (107) **Total Sash Height** = window height − 8.410" (214)

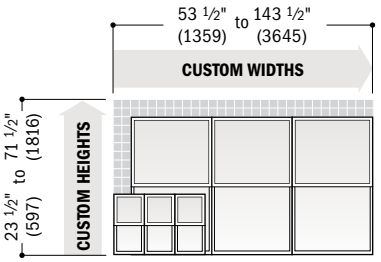

Triple

Clear Opening	**Width** = (window width ÷ 3) − 3.833" (97) **Height** = (window height ÷ 2) − 3.711" (94)	**Minimum R.O.**	**1 3/8" & 1" Flange Setback Frames** **Width** = window width + 1/2" (13) **Height** = window height + 1/2" (13) **Insert & Flush Fin Frames** **Width** = window width + 3/8" (10) **Height** = window height + 3/8" (10)
Vent Opening	**Equal Sash Ratio** **Width** = window width − 11.500" (292) **Height** = (window height ÷ 2) − 3.711" (94)	**Unobst. Glass**	**Single Sash Width** = (window width ÷ 3) − 6.583" (167) **Total Sash Width** = window width − 19.750" (502) **Fixed Sash Height** = (window height ÷ 2) − 4.184" (106) **Venting Sash Height** = (window height ÷ 2) − 4.226" (107) **Total Sash Height** = window height − 8.410" (214)

• **Clear Opening** formulas provide dimensions for determining area available for egress. **Vent Opening** formulas provide dimensions for determining area available for passage of air. **Minimum R.O.** (minimum rough opening) formulas provide minimum rough opening width and height dimensions. **Unobst. Glass** (unobstructed glass) formulas provide dimensions for determining area available for passage of light.
• Dimensions in parentheses are in millimeters.
• Windows with flush fin frame are available in select Southwestern states including Arizona, California, Nevada, New Mexico and Utah. Limited configuration availability. See your Andersen supplier for more information.
*Window heights that require a 2:1 reverse cottage sash ratio are available in custom sizes from 17 1/2" (445) to 47 1/2" (1207) in width to 77 5/8" (1972) to 89 1/2" (2273) in height. For area and opening specifications, contact your Andersen supplier.

Gliding Windows

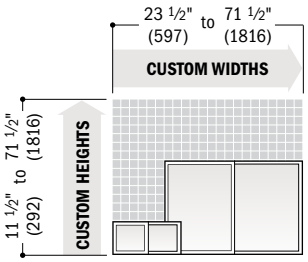

Active-Stationary or Stationary-Active

Clear Opening	**Width** = (window width ÷ 2) − 3.711" (94) **Height** = window height − 3.500" (89)	**Minimum R.O.**	**1 3/8" & 1" Flange Setback Frames** **Width** = window width + 1/2" (13) **Height** = window height + 1/2" (13) **Insert & Flush Fin Frames** **Width** = window width + 3/8" (10) **Height** = window height + 3/8" (10)
Vent Opening	**Width** = (window width ÷ 2) − 3.711" (94) **Height** = window height − 3.500" (89)	**Unobst. Glass**	**Fixed Sash Width** = (window width ÷ 2) − 4.184" (106) **Venting Sash Width** = (window width ÷ 2) − 4.226" (107) **Total Sash Width** = window width − 8.410" (214) **Height** = window height − 6.250" (159)

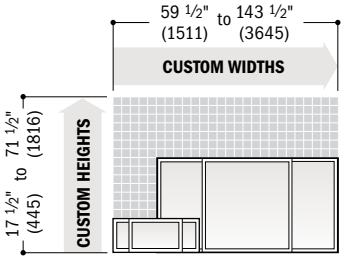

Active-Stationary-Active 1:2:1 Sash Ratio

Clear Opening	**Width** = (window width ÷ 4) − 2.976" (76) **Height** = window height − 3.500" (89)	**Minimum R.O.**	**1 3/8" & 1" Flange Setback Frames** **Width** = window width + 1/2" (13) **Height** = window height + 1/2" (13) **Insert & Flush Fin Frames** **Width** = window width + 3/8" (10) **Height** = window height + 3/8" (10)
Vent Opening	**Width** = (window width ÷ 2) − 5.952" (151) **Height** = window height − 3.500" (89)	**Unobst. Glass**	**Fixed Sash Width** = (window width ÷ 2) − 1.868" (47) **Venting Sash Width** = (window width ÷ 4) − 4.351" (111) **Total Sash Width** = window width − 10.570" (268) **Height** = window height − 6.250" (159)

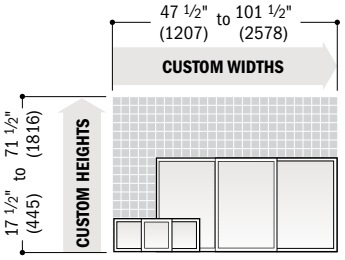

Active-Stationary-Active 1:1:1 Equal Sash Ratio

Clear Opening	**Width** = (window width ÷ 3) − 5.164" (131) **Height** = window height − 3.500" (89)	**Minimum R.O.**	**1 3/8" & 1" Flange Setback Frames** **Width** = window width + 1/2" (13) **Height** = window height + 1/2" (13) **Insert & Flush Fin Frames** **Width** = window width + 3/8" (10) **Height** = window height + 3/8" (10)
Vent Opening	**Width** = (window width ÷ 3) − 5.164" (131) **Height** = window height − 3.500" (89)	**Unobst. Glass**	**Fixed Sash Width** = (window width ÷ 3) − 3.496" (89) **Venting Sash Width** = (window width ÷ 3) − 3.537" (90) **Total Sash Width** = window width − 10.570" (268) **Height** = window height − 6.250" (159)

• **Clear Opening** formulas provide dimensions for determining area available for egress. **Vent Opening** formulas provide dimensions for determining area available for passage of air. **Minimum R.O.** (minimum rough opening) formulas provide minimum rough opening width and height dimensions. **Unobst. Glass** (unobstructed glass) formulas provide dimensions for determining area available for passage of light.
• Dimensions in parentheses are in millimeters.
• Windows with flush fin frame are available in select Southwestern states including Arizona, California, Nevada, New Mexico and Utah. Limited configuration availability. See your Andersen supplier for more information.

WINDOW CUSTOM SIZES

Picture Windows

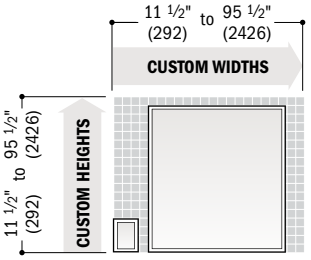

Either height or width must be 71 1/2" (1816) or less.

Minimum R.O.		Unobst. Glass	
	1 3/8" & 1" Flange Setback Frames **Width** = window width + 1/2" (13) **Height** = window height + 1/2" (13) **Insert & Flush Fin Frames** **Width** = window width + 3/8" (10) **Height** = window height + 3/8" (10)		**1 3/8" & 1" Flange Setback, No Flange and Insert Frames** **Width** = window width − 6.250" (159) **Height** = window height − 6.250" (159) **Flush Fin Frame** **Width** = window width − 3.500" (89) **Height** = window height − 3.500" (89)

Transom Windows

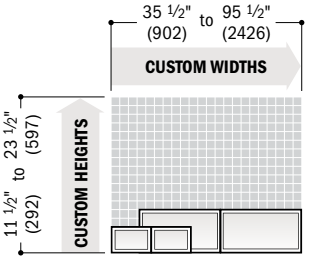

Twin

Minimum R.O.		Unobst. Glass	
	1 3/8" & 1" Flange Setback Frames **Width** = window width + 1/2" (13) **Height** = window height + 1/2" (13) **Insert & Flush Fin Frames** **Width** = window width + 3/8" (10) **Height** = window height + 3/8" (10)		**Twin** **Single Sash Width** = (window width ÷ 2) − 6.500" (165) **Total Sash Width** = window width − 13.000" (330) **Height** = window height − 6.250" (159)

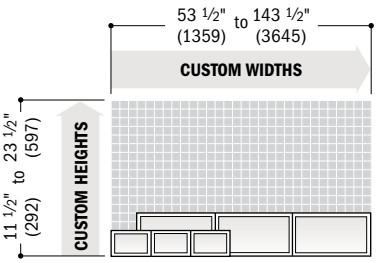

Triple

Minimum R.O.		Unobst. Glass	
	1 3/8" & 1" Flange Setback Frames **Width** = window width + 1/2" (13) **Height** = window height + 1/2" (13) **Insert & Flush Fin Frames** **Width** = window width + 3/8" (10) **Height** = window height + 3/8" (10)		**Triple** **Single Sash Width** = (window width ÷ 3) − 6.583" (167) **Total Sash Width** = window width − 19.750" (502) **Height** = window height − 6.250" (159)

Triple transom windows with unequal sash are not available in custom sizes.

• **Minimum R.O.** (minimum rough opening) formulas provide minimum rough opening width and height dimensions. **Unobst. Glass** (unobstructed glass) formulas provide dimensions for determining area available for passage of light.
• Dimensions in parentheses are in millimeters.
• Windows with flush fin frame are available in select Southwestern states including Arizona, California, Nevada, New Mexico and Utah. Limited configuration availability. See your Andersen supplier for more information.

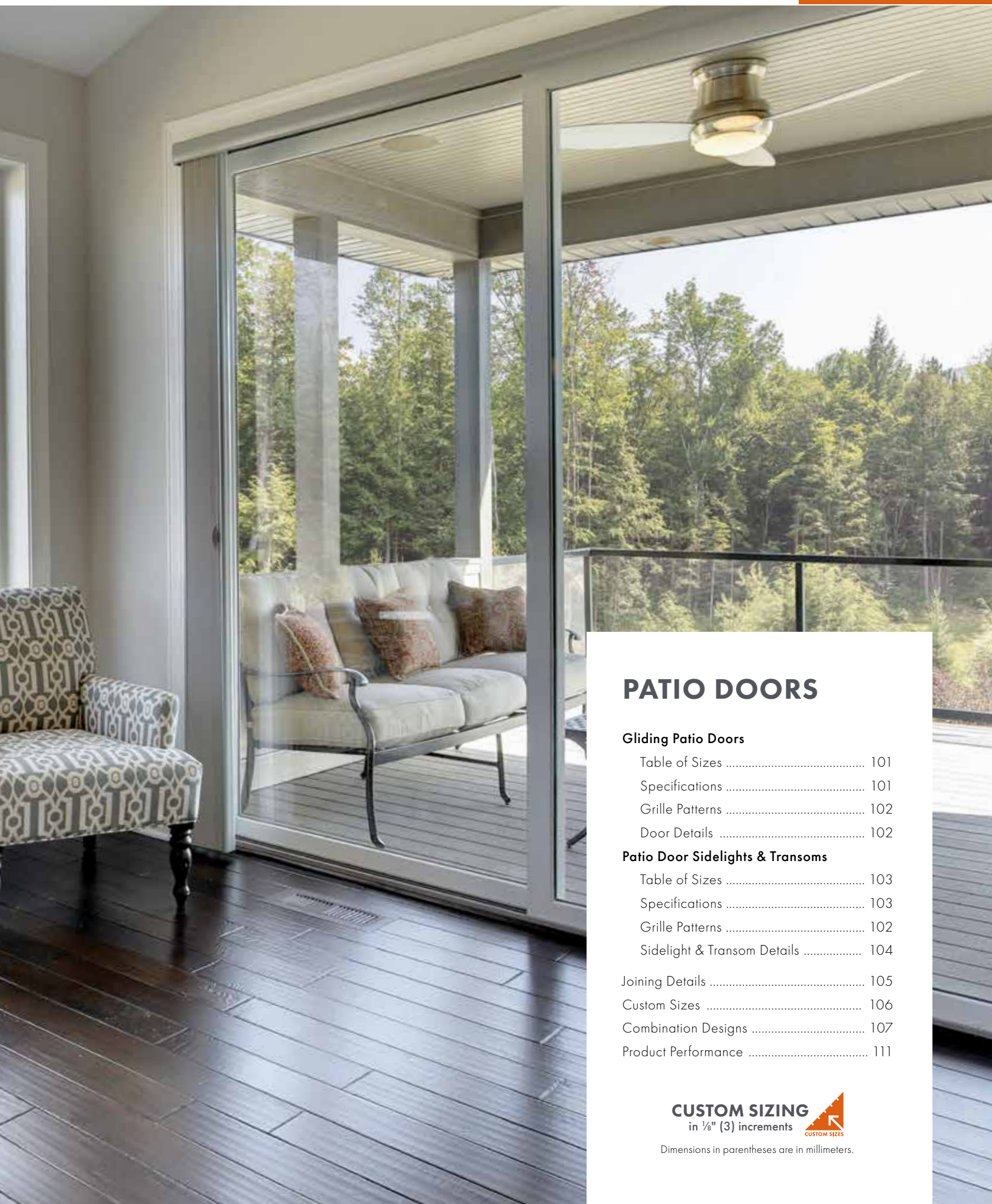

PATIO DOORS

Gliding Patio Doors

Table of Sizes 101
Specifications 101
Grille Patterns 102
Door Details 102

Patio Door Sidelights & Transoms

Table of Sizes 103
Specifications 103
Grille Patterns 102
Sidelight & Transom Details 104

Joining Details 105
Custom Sizes 106
Combination Designs 107
Product Performance 111

CUSTOM SIZING
in ⅛" (3) increments

CUSTOM SIZES

Dimensions in parentheses are in millimeters.

FEATURES

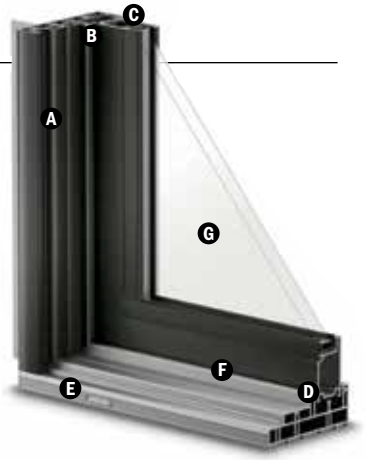

GLIDING PATIO DOORS

FRAME

A The frame is constructed with Fibrex® composite material. This construction produces a rigid frame. The durable, low-maintenance finish won't fade, flake, blister or peel.*

Factory-assembled doors arrive at the job site ready to install.

B Dual felt weatherstrip, applied on the inside pocket of both side jambs and the head jamb, creates a positive seal between the frame and panels. The result is a long-lasting,* energy-efficient barrier against wind, water and dust.

A full-length combination weatherstrip/interlock system provides a flexible seal at the meeting stile.

Three frame options include:

- 1 3/8" (35) flange setback for new construction siding applications. An integral rigid vinyl flange helps seal the unit to the structure.
- 1" (25) flange setback with stucco key for new construction stucco applications. An integral rigid vinyl flange helps seal the unit to the structure.
- No flange for door replacement in an existing framed opening.

PANEL

C Fibrex material construction provides long-lasting performance.* The panel, finished with a durable capping, provides maximum protection and a matte low-maintenance finish.

D Dual corrosion-resistant* ball-bearing rollers on the operating door panel provide smooth operation with self-contained leveling adjusters. The rollers have deep grooves to increase engagement with the roller track and resist lateral movement. Metal reinforcement inserted into the panel stiles provides additional stability.

SILL

E The one-piece sill design with weep holes located on the sill exterior provides superior water management. The heavy-gauge PVC construction is wear resistant and neutral gray in color.

F The roller track has a stainless steel cap that resists denting for smooth, reliable operation.

GLASS

Glass spacers are available in stainless steel and black. Stainless steel glass spacer shown.

A glazing bead and silicone provide superior weathertightness and durability.

H High-Performance options include:

- Low-E SmartSun™ tempered glass
- Low-E SmartSun HeatLock® tempered glass
- Low-E tempered glass
- Low-E HeatLock tempered glass
- Low-E Sun tempered glass
- Low-E PassiveSun® tempered glass
- Low-E PassiveSun HeatLock tempered glass
- Clear dual-pane tempered glass

Additional glass options are available. Contact your Andersen supplier.

A removable translucent film helps shield the glass from damage during delivery and construction, and simplifies finishing at the job site.

Patterned Glass

Patterned glass options are available. See page 13 for more details.

HARDWARE

Locking System

A two-point locking system engages a steel receiver plate that's secured into the side jamb. This provides enhanced security and a weathertight seal, with the operating panel pulled tightly into the jamb.

EXTERIORS & INTERIORS

EXTERIOR COLORS

White | Sandtone | Terratone | Dark Bronze | Black

INTERIOR COLORS

White | Sandtone** | Dark Bronze** | Black**

HARDWARE

TULSA
Standard Handle

Exterior handle color matches the door's exterior. Interior handle color matches the door's interior.
Exterior handle shown in dark bronze.
Interior handle shown in white.

See exterior and interior color swatches shown above.

AFTON
Optional Handle

Antique Brass
Black
Bright Brass
Satin Nickel

Bold name denotes finish shown.

Antique Brass | Black | Bright Brass | Satin Nickel

ACCESSORIES Sold Separately

HARDWARE

Auxiliary Foot Lock

Provides an extra measure of security when the door is in a locked position. Available in colors that coordinate with the door's interior.

GRILLES

Grilles are available in a variety of configurations. See page 14 for details.

INSECT SCREENS

Insect screens have charcoal gray fiberglass screen mesh. The latch mechanism is contained within the insect screen handle for easy operation. Frames are available in colors to match the door's exterior.

SIDELIGHTS & TRANSOMS

Patio door sidelights and transoms are available. See page 103.

*Visit andersenwindows.com/warranty for details.
**Products with Sandtone, dark bronze and black interiors have matching exteriors.
Dimensions in parentheses are in millimeters.
Printing limitations prevent exact replication of colors and finishes. See your Andersen supplier for actual color and finish samples.

Patio Door Heights

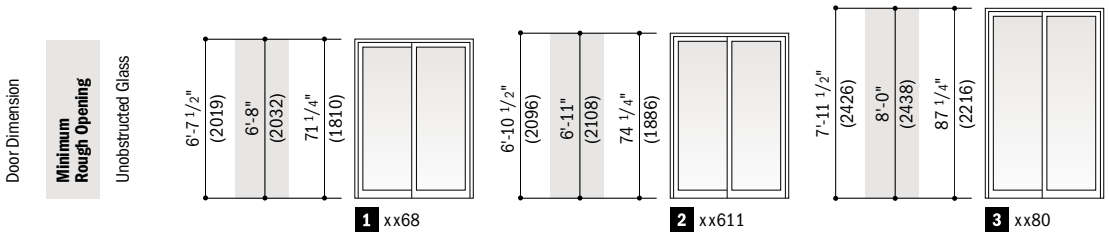

Table of Gliding Patio Doors Sizes

Scale 1/8" (3) = 1'-0" (305) – 1:96

Door Dimension	4'-11 1/4" (1505)	4'-11 1/4" (1505)	5'-11 1/4" (1810)	5'-11 1/4" (1810)
Minimum Rough Opening	5'-0" (1524)	5'-0" (1524)	6'-0" (1829)	6'-0" (1829)
Unobstructed Glass (width of single panel only)	24 1/8" (613)	24 1/8" (613)	30 1/8" (765)	30 1/8" (765)
3 heights				
1	5068**L**	5068**R**	6068**L**	6068**R**
2	50611**L**	50611**R**	60611**L**	60611**R**
3	5080**L**	5080**R**	6080**L**	6080**R**

Door Dimension	7'-11 1/4" (2419)	7'-11 1/4" (2419)
Minimum Rough Opening	8'-0" (2438)	8'-0" (2438)
	42 1/8" (1070)	42 1/8" (1070)
3 heights		
1	8068**L***	8068**R***
2	80611**L***	80611**R***
3	8080**L***	8080**R***

- Door Dimension always refers to outside frame-to-frame dimension.
- **Minimum Rough Opening dimensions may need to be increased to allow for use of building wraps, flashing, sill panning, brackets, fasteners or other items. See page 121 for more details.**
- Dimensions in parentheses are in millimeters.

*Meets or exceeds a 32" (813) clear opening width.

Custom-size patio doors are available in 1/8" (3) increments.

See page 106 for custom sizes and specifications.

Arrow indicates direction of panel operation as viewed from the exterior.

To meet or exceed a clear opening width of 32" (813), select a door width that requires a rough opening width of 6'-6" (1981) or greater.

Grille patterns and details shown on page 102.

Gliding Patio Door Opening and Area Specifications

Door Number	Clear Opening Area* Sq. Ft./(m²)	Clear Opening in Full Open Position: Width* Inches/(mm)	Clear Opening in Full Open Position: Height Inches/(mm)	Glass Area Sq. Ft./(m²)	Vent Area* Sq. Ft./(m²)	Overall Door Area Sq. Ft./(m²)
5068	12.38 (1.15)	23 1/2" (597)	75 7/8" (1927)	23.87 (2.22)	12.38 (1.15)	32.71 (3.04)
6068	15.54 (1.44)	29 1/2" (749)	75 7/8" (1927)	31.27 (2.91)	15.54 (1.44)	39.34 (3.65)
8068	21.87 (2.03)	41 1/2" (1054)	75 7/8" (1927)	43.14 (4.01)	21.87 (2.03)	52.59 (4.89)
50611	12.87 (1.20)	23 1/2" (597)	78 7/8" (2003)	52.79 (4.90)	12.87 (1.20)	33.95 (3.15)
60611	16.16 (1.50)	29 1/2" (749)	78 7/8" (2003)	32.58 (3.03)	16.16 (1.50)	40.82 (3.79)
80611	22.73 (2.11)	41 1/2" (1054)	78 7/8" (2003)	44.96 (4.18)	22.73 (2.11)	54.57 (5.07)
5080	14.99 (1.39)	23 1/2" (597)	91 7/8" (2334)	31.02 (2.88)	14.99 (1.39)	39.29 (3.65)
6080	18.82 (1.75)	29 1/2" (749)	91 7/8" (2334)	38.29 (3.56)	18.82 (1.75)	47.25 (4.39)
8080	26.48 (2.46)	41 1/2" (1054)	91 7/8" (2334)	52.83 (4.91)	26.48 (2.46)	63.17 (5.87)

- Dimensions in parentheses are in millimeters or square meters.

*For doors with Tulsa hardware only. Contact your Andersen supplier for doors with Afton hardware.

Order Designation Description

Viewed from the exterior.

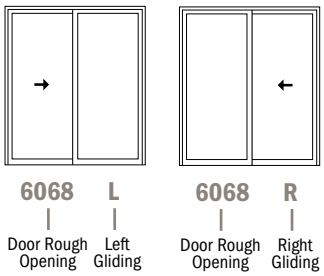

Grille Patterns

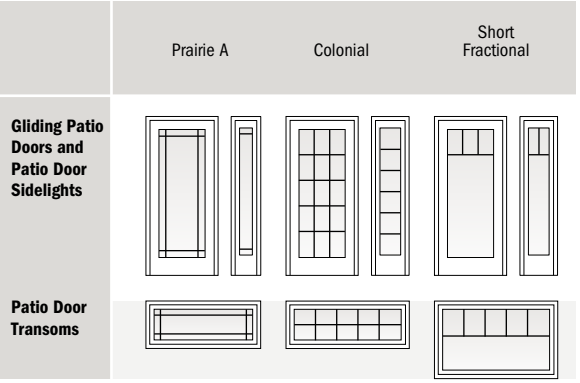

Number of lights and overall pattern varies with door size. Patterns may not be available in all configurations or sizes. Specified equal light and custom patterns are also available.

For specified equal light, specify number of same-size rectangles across or down.

For more grille options, see page 14 or visit **andersenwindows.com/grilles**.

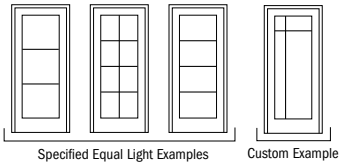

Gliding Patio Door Details

Scale 1 1/2" (38) = 1'-0" (305) – 1:8

1 3/8" Flange Setback

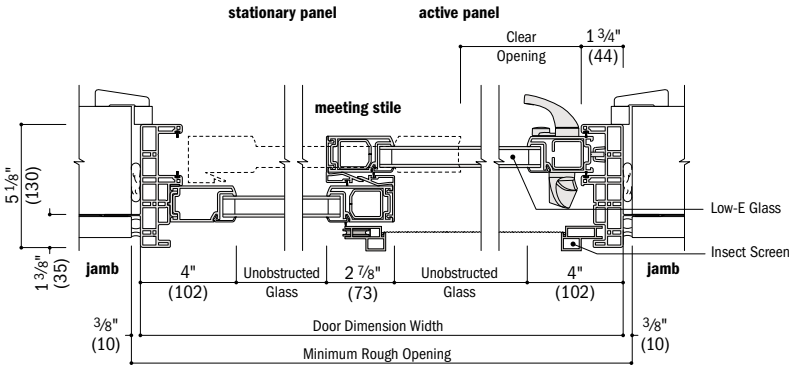

Horizontal Section

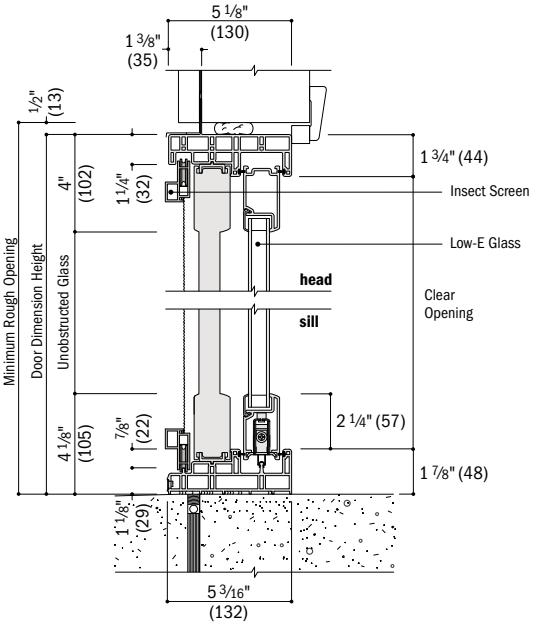

Vertical Section

1" Flange Setback With Stucco Key

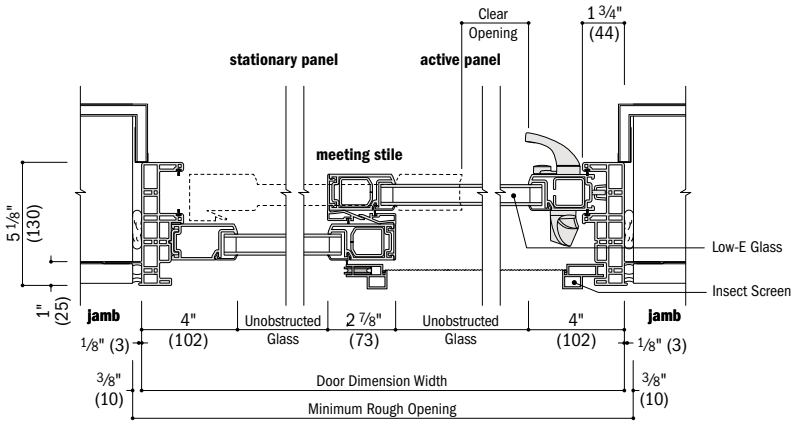

Horizontal Section
Stucco Exterior

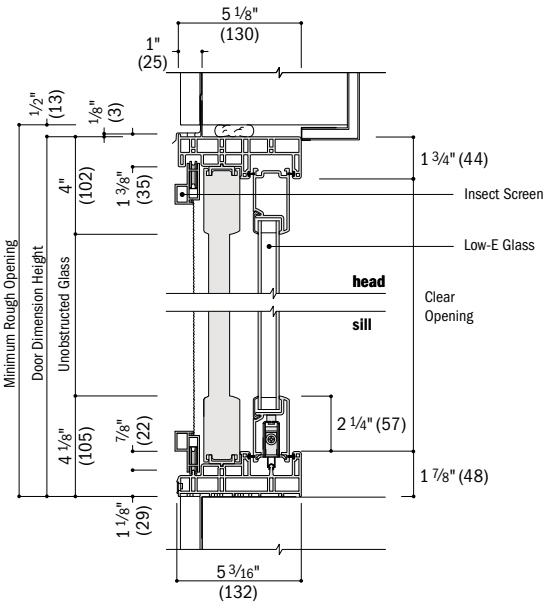

Vertical Section
Stucco Exterior

See page 105 for joining details.

- Light-colored areas are parts included with door. Dark-colored areas are additional Andersen® parts required to complete door assembly as shown.
- **Minimum rough openings may need to be increased to allow for use of building wraps, flashing, sill panning, brackets, fasteners or other items. See installation information on page 121.**
- Drip cap is required to complete door installation as shown but may not be included with door. Use of drip cap is recommended for proper installation.
- Details are for illustration only and are not intended to represent product installation methods or materials. Refer to product installation instructions at andersenwindows.com.
- Dimensions in parentheses are in millimeters.

Table of Patio Door Sidelight and Transom Sizes

Scale 1/8" (3) = 1'-0" (305) – 1:96

Sidelight/Transom Dimension	1'-2 1/4" (362)	1'-5 1/4" (438)	1'-11 1/4" (591)	2'-5 1/4" (743)	2'-11 1/4" (895)	3'-11 1/4" (1200)	4'-11 1/4" (1505)	5'-11 1/4" (1810)	7'-11 1/4" (2419)
Minimum Rough Opening	1'-3" (381)	1'-6" (457)	2'-0" (610)	2'-6" (762)	3'-0" (914)	4'-0" (1219)	5'-0" (1524)	6'-0" (1829)	8'-0" (2438)
Unobstructed Glass	6 3/16" (157)	9 3/16" (233)	15 3/16" (386)	21 3/16" (538)	27 3/16" (691)	39 3/16" (995)	51 3/16" (1300)	63 3/16" (1605)	87 3/16" (2215)

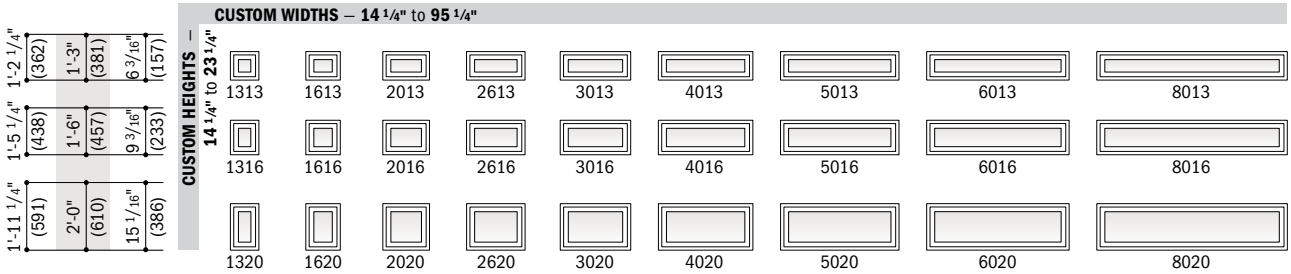

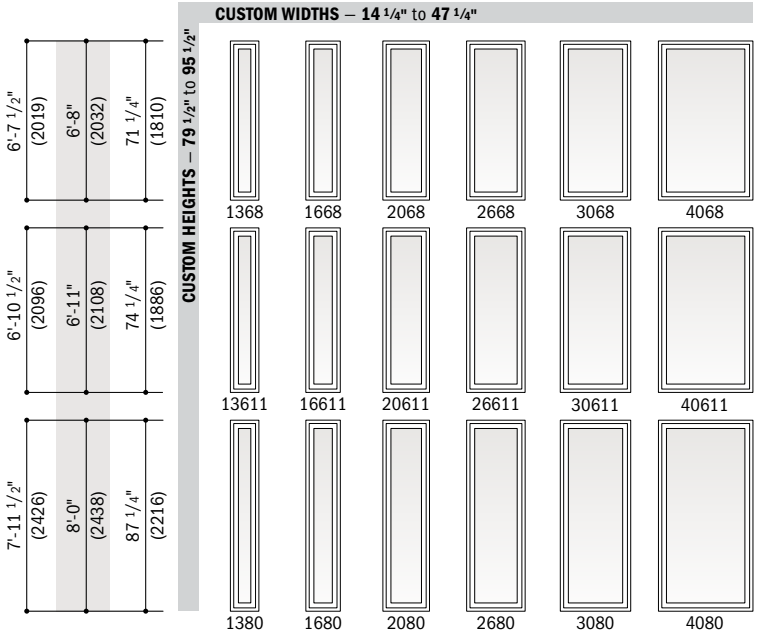

Custom-size doors are available in 1/8" (3) increments.

See page 106 for custom sizes and specifications.

Grille patterns shown on page 102.

Details shown on page 104.

- Transom/Sidelight Dimension always refers to outside frame-to-frame dimension.
- **Minimum Rough Opening dimensions may need to be increased to allow for use of building wraps, flashing, sill panning, brackets, fasteners or other items. See page 121 for more details.**
- Dimensions in parentheses are in millimeters.

Patio Door Sidelight Area Specifications

Sidelight Number	Glass Area Sq. Ft./(m²)		Overall Window Area Sq. Ft./(m²)	
1368	3.06	(0.28)	7.87	(0.73)
13611	3.19	(0.30)	8.16	(0.76)
1380	3.75	(0.35)	9.45	(0.88)
1668	4.55	(0.42)	9.52	(0.88)
16611	4.74	(0.44)	9.88	(0.92)
1680	5.57	(0.52)	11.44	(1.06)
2068	7.51	(0.70)	12.84	(1.19)
20611	7.83	(0.73)	13.32	(1.24)
2080	9.20	(0.85)	15.42	(1.43)
2668	10.48	(0.97)	16.15	(1.50)
26611	10.92	(1.01)	16.76	(1.56)
2680	12.84	(1.19)	19.40	(1.80)
3068	13.45	(1.25)	19.46	(1.81)
30611	14.02	(1.30)	20.20	(1.88)
3080	16.47	(1.53)	23.38	(2.17)
4068	19.39	(1.80)	26.09	(2.42)
40611	20.21	(1.88)	27.07	(2.51)
4080	23.74	(2.21)	31.34	(2.91)

- Dimensions in parentheses are in square meters.

Patio Door Transom Area Specifications

Transom Number	Glass Area Sq. Ft./(m²)		Overall Window Area Sq. Ft./(m²)	
1313	0.27	(0.03)	1.41	(0.13)
1316	0.40	(0.04)	1.71	(0.16)
1320	0.65	(0.06)	2.30	(0.21)
1613	0.40	(0.04)	1.71	(0.16)
1616	0.59	(0.05)	2.07	(0.19)
1620	0.97	(0.09)	2.79	(0.26)
2013	0.65	(0.06)	2.30	(0.21)
2016	0.97	(0.09)	2.79	(0.26)
2020	1.61	(0.15)	3.75	(0.35)
2613	0.91	(0.09)	2.90	(0.27)
2616	1.35	(0.13)	3.50	(0.33)
2620	2.24	(0.21)	4.72	(0.44)
3013	1.17	(0.11)	3.49	(0.32)
3016	1.74	(0.16)	4.22	(0.39)
3020	2.87	(0.27)	5.69	(0.53)
4013	1.69	(0.16)	4.68	(0.43)
4016	2.50	(0.23)	5.66	(0.53)
4020	4.13	(0.39)	7.63	(0.71)

Transom Number	Glass Area Sq. Ft./(m²)		Overall Window Area Sq. Ft./(m²)	
5013	2.20	(0.20)	5.86	(0.55)
5016	3.27	(0.30)	7.10	(0.66)
5020	5.40	(0.50)	9.57	(0.89)
6013	2.72	(0.25)	7.05	(0.66)
6016	4.03	(0.38)	8.54	(0.79)
6020	6.67	(0.62)	11.50	(1.07)
8013	3.75	(0.35)	9.43	(0.88)
8016	5.56	(0.52)	11.41	(1.06)
8020	9.20	(0.85)	15.38	(1.43)

- Dimensions in parentheses are in square meters.

Patio Door Sidelight and Transom Details

Scale 1 1/2" (38) = 1'-0" (305) – 1:8

1 3/8" Flange Setback

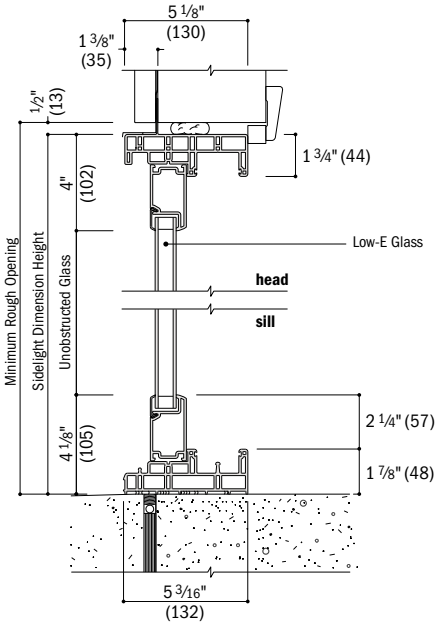

Vertical Section
Sidelight

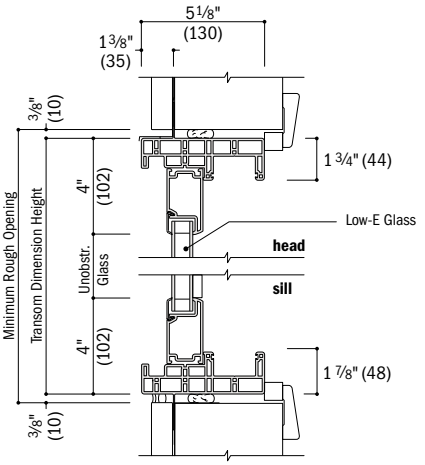

Vertical Section
Transom

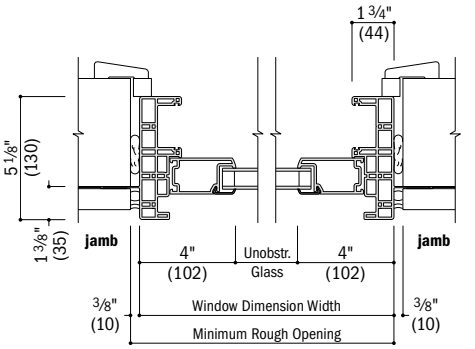

Horizontal Section
Sidelight/Transom

1" Flange Setback With Stucco Key

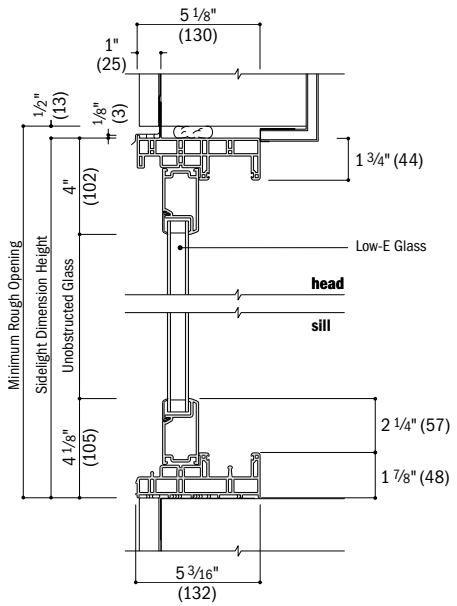

Vertical Section
Sidelight, Stucco Exterior

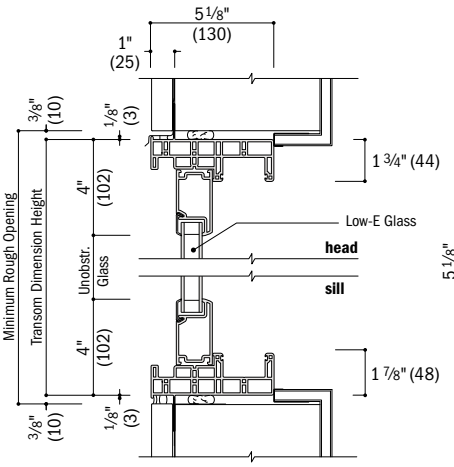

Vertical Section
Transom, Stucco Exterior

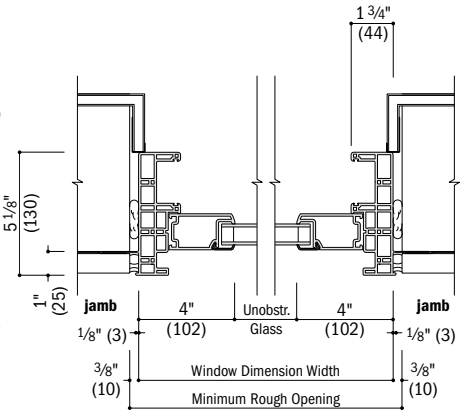

Horizontal Section
Sidelight/Transom, Stucco Exterior

See page 105 for joining details.

- Light-colored areas are parts included with sidelight/transom. Dark-colored areas are additional Andersen® parts required to complete sidelight/transom assembly as shown.
- **Minimum rough openings may need to be increased to allow for use of building wraps, flashing, sill panning, brackets, fasteners or other items. See installation information on page 121.**
- Drip cap is required to complete door installation as shown but may not be included with door. Use of drip cap is recommended for proper installation.
- Details are for illustration only and are not intended to represent product installation methods or materials. Refer to product installation instructions at andersenwindows.com.
- Dimensions in parentheses are in millimeters.

Vertical (ribbon) Easy Connect Fiberglass Joining Details

Scale 1 1/2" (38) = 1'-0" (305) — 1:8

The addition of joining materials will affect the overall rough opening dimension.

Overall Door-Sidelight or Sidelight-Sidelight Dimension Width – Sum of individual door-sidelight or sidelight-sidelight widths plus 3/4" (19).

Overall Minimum Rough Opening Width – Overall dimension width plus 3/4" (19).

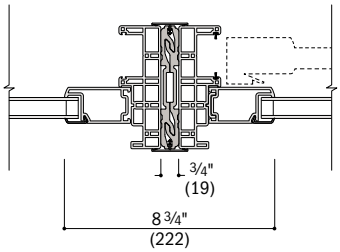

Sidelight to Gliding Patio Door
Stationary Jamb

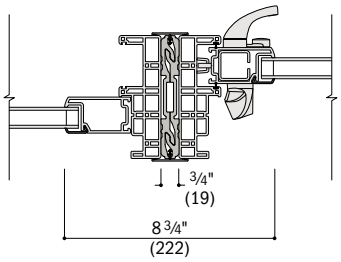

Sidelight to Gliding Patio Door
Operating Jamb

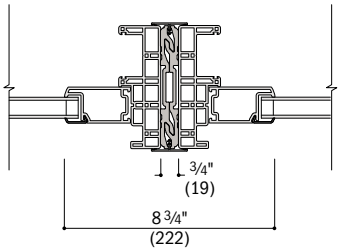

Sidelight to Sidelight

Overall Sidelight-Door-Sidelight Dimension Width – Sum of individual sidelight-door-sidelight widths plus 1 1/2" (38).

Overall Minimum Rough Opening Width – Overall dimension width plus 3/4" (19).

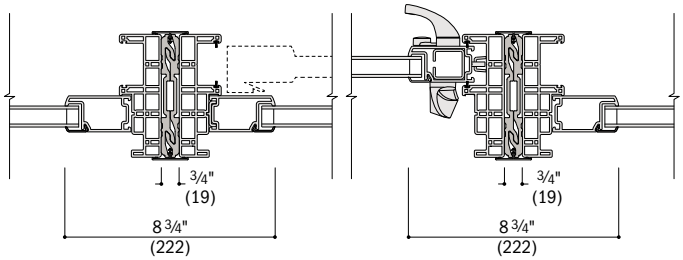

Sidelight to Gliding Patio Door to Sidelight
Stationary Jamb, Operating Jamb

Horizontal (stack) Easy Connect Fiberglass Joining Details

Scale 1 1/2" (38) = 1'-0" (305) — 1:8

The addition of joining materials will affect the overall rough opening dimension.

Overall Transom/Door or Transom/Sidelight Dimension Height – Sum of individual transom/door or transom/sidelight heights plus 3/4" (19).

Overall Minimum Rough Opening Height – Overall dimension height plus 1/2" (13).

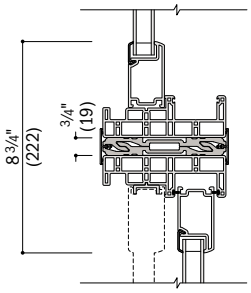

Transom Over Gliding Patio Door

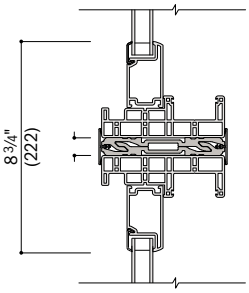

Transom Over Sidelight

For more information on joining, refer to the Combination Designs section starting on page 107.

- Light-colored areas are parts included with door/sidelight/transom. Dark-colored areas are additional Andersen® parts required to complete door/sidelight/transom assembly as shown.
- **Minimum rough openings may need to be increased to allow for use of building wraps, flashing, sill panning, brackets, fasteners or other items. See installation information on page 121.**
- Details are for illustration only and are not intended to represent product installation methods or materials. Refer to product installation instructions at andersenwindows.com.
- Structural performance of any combination is only as high as the lowest structural performance of any individual product or join in the combination.
- Contact your Andersen supplier for information on meeting wind load requirements for patio door joined combinations.
- Dimensions in parentheses are in millimeters.

PATIO DOOR CUSTOM SIZES

Custom Sizes and Specification Formulas

100 Series custom-size patio doors and patio door sidelights and transoms are available in 1/8" (3) increments between minimum and maximum widths and heights shown. Some restrictions apply.

To meet or exceed a clear opening width of 32" (813), select a custom-size door width that requires a rough opening width of 6'-6" (1981) or greater.

Gliding Patio Doors

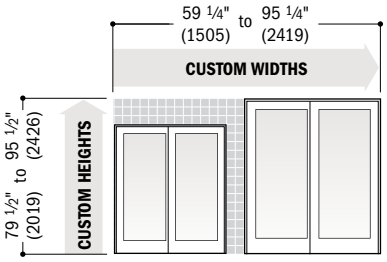

Clear Opening	**Width** = (door width ÷ 2) − 6.125" (156) **Height** = door height − 3.625" (92)	**Minimum R.O.**	**Width** = door width + 3/4" (19) **Height** = door height + 1/2" (13)	**Unobst. Glass**	**Single-Panel** **Width** = (door width ÷ 2) − 5.500" (140) **Two-Panel** **Width** = door width − 11.000" (279) **Height** = door height − 8.250" (210)

Patio Door Sidelights

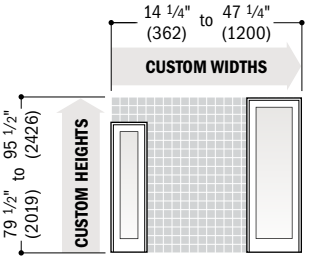

Minimum R.O.	**Width** = sidelight width + 3/4" (19) **Height** = sidelight height + 1/2" (13)	**Unobst. Glass**	**Width** = sidelight width − 8.048" (204) **Height** = sidelight height − 8.048" (204)

Patio Door Transoms

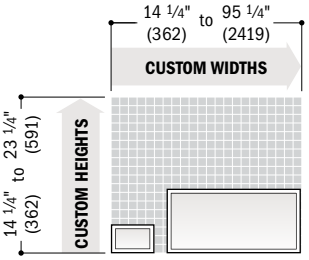

Minimum R.O.	**Width** = transom width + 3/4" (19) **Height** = transom height + 3/4" (19)	**Unobst. Glass**	**Width** = transom width − 8.048" (204) **Height** = transom height − 8.048" (204)

• **Clear Opening** formulas provide dimensions for determining area available for egress. **Minimum R.O.** (minimum rough opening) formulas provide minimum rough opening width and height dimensions. **Unobst. Glass** (unobstructed glass) formulas provide dimensions for determining area available for passage of light.
• Dimensions in parentheses are in millimeters.

Andersen® window and patio doors make it easy to create a wide variety of combination designs

Combination Types

Ribbons are horizontal window combinations (vertical joins) where opposite ends (head and sill) of individual windows are fastened to the building structure. Stacks are vertical window combinations (horizontal joins) where opposite sides (both side jambs) of individual windows are fastened to the building structure. One-way configurations or two-way configurations are used in combination designs.

One-Way

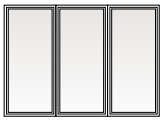

Ribbon Combination

Stack Combination

Two-Way

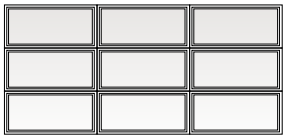

Multiple Ribbon/Stack Combination

Two-way combinations exist when multiple vertical stacks and horizontal ribbons are joined together. Unlike one-way combinations, the adjacent sides (head and sill, or both side jambs) of individual units are not necessarily fastened directly to the building structure. Two-way combinations are joined with both vertical and horizontal joining material, and may require reinforced joining materials and brackets depending on the local building code requirement for design wind load (measured in pounds per square foot, psf).

Determining Design Wind Load Performance

Proper combination design in conformance with local wind load requirements is vital to the success of your project. To make sure a combination is safe and that it complies with local building codes, the combination design wind load performance capacity must be determined. Correctly determining this performance capacity involves the following three steps:

STEP 1: Determine Building Code Requirement

Make sure you have the proper local codes and have identified specified compliance values. This calculated value (psf) will be used to determine if the combination will be acceptable (STEP 3).

STEP 2: Determine Product Performance

Compare product Design Pressure Rating data to the local building code (psf) requirement. This will show whether the individual units in a combination design are acceptable.

STEP 3: Determine Combination Performance

This step helps determine whether a given product, size, configuration and joining material type will meet the local building code design wind load requirement. To determine what joining material type to use (non-reinforced or reinforced), compare the local building code design wind load requirement to the design wind load table value for a particular joining material on the following pages.

Andersen Joining Material

For a successful installation, one engineered to provide the required design pressure, it is important Andersen joining materials and installation accessories be specified by a project architect or contractor. For one- and two-way combinations, Andersen offers a fiberglass joining system that meets specified performance requirements and enhances the look of Andersen products without sacrificing performance.

The addition of joining materials will affect the overall rough opening dimension. See page 121. **For all joining methods, read and follow product joining and installation instructions in their entirety. Visit andersenwindows.com for instructions.**

Exterior trim strips and trim strip end caps are included with each kit for finishing the exterior join. Interior trim is included with each joining kit for finishing the join on the interior. Components used with each joining system will vary depending on products being joined. Check with your Andersen supplier for more information.

Reinforced joining material is used to create product alignment, positive joining and load transfer between Andersen windows and doors and the rough opening. They provide added strength capable of withstanding a greater range of wind load pressures. Non-reinforced joining material is used to create alignment and positive joining between windows. Joining materials are not connected to the rough opening structure. The structural performance of any combination is only as high as the lowest structural performance rating of any individual unit or joining material in the combination.

Contact your Andersen supplier for specific performance and product recommendations.

1-Way Non-Reinforced Fiberglass Joining

100 Series Windows: Picture to Picture, Casement to Casement, Awning to Awning, Casement to Picture, Awning to Picture

Applicable for flanged or flangeless installations into wood or metal. Ratings for windows installed into concrete or masonry are lower.

Average Adjacent Window Dimension							
(A + B) ÷ 2 = **6'-0"** (1829)	50	50	43	37	32	29	26
(A + B) ÷ 2 = **5'-6"** (1676)	50	50	44	38	33	30	27
(A + B) ÷ 2 = **5'-0"** (1524)	50	50	45	39	35	31	28
(A + B) ÷ 2 = **4'-6"** (1372)	50	50	46	41	36	33	30
(A + B) ÷ 2 = **4'-0"** (1219)	50	50	49	43	39	35	32
(A + B) ÷ 2 = **3'-6"** (1067)	50	50	50	47	42	39	36
(A + B) ÷ 2 = **3'-0"** (914)	50	50	50	50	47	43	40
(A + B) ÷ 2 = **2'-6"** (762)	50	50	50	50	50	50	46
(A + B) ÷ 2 = **2'-0"** (610)	50	50	50	50	50	50	50
C = (length of join)	**5'-0"** (1524)	**5'-6"** (1676)	**6'-0"** (1829)	**6'-6"** (1981)	**7'-0"** (2134)	**7'-6"** (2286)	**8'-0"** (2438)

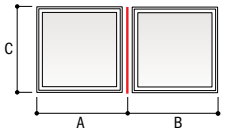

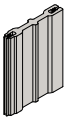

½" (13) x 3 ¼" (83)
Fiberglass Joining Material

1-Way Non-Reinforced Fiberglass Joining

100 Series Windows: Single-Hung to Picture, Gliding to Picture

Applicable for flanged or flangeless installations into wood or metal. Ratings for windows installed into concrete or masonry are lower.

Avg. Adjacent Window Dim.							
(A + B) ÷ 2 = **5'-0"** (1524)	50	50	45	39	35	31	28
(A + B) ÷ 2 = **4'-6"** (1372)	50	50	46	41	36	33	30
(A + B) ÷ 2 = **4'-0"** (1219)	50	50	49	43	39	35	32
(A + B) ÷ 2 = **3'-6"** (1067)	50	50	50	47	42	39	36
(A + B) ÷ 2 = **3'-0"** (914)	50	50	50	50	47	43	40
(A + B) ÷ 2 = **2'-6"** (762)	50	50	50	50	50	50	46
(A + B) ÷ 2 = **2'-0"** (610)	50	50	50	50	50	50	50
C = (length of join)	**5'-0"** (1524)	**5'-6"** (1676)	**6'-0"** (1829)	**6'-6"** (1981)	**7'-0"** (2134)	**7'-6"** (2286)	**8'-0"** (2438)

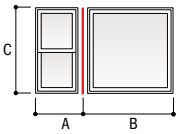

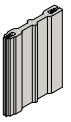

½" (13) x 3 ¼" (83)
Fiberglass Joining Material

1-Way Non-Reinforced Fiberglass Joining

100 Series Windows: Single-Hung to Single-Hung, Gliding to Gliding, Single-Hung to Casement, Single-Hung to Awning

Applicable for flanged or flangeless installations into wood or metal. Ratings for windows installed into concrete or masonry are lower.

Avg. Adj. Window Dim.							
(A + B) ÷ 2 = **4'-0"** (1219)	50	50	49	43	39	34	30
(A + B) ÷ 2 = **3'-6"** (1067)	50	50	50	47	42	38	33
(A + B) ÷ 2 = **3'-0"** (914)	50	50	50	50	47	43	38
(A + B) ÷ 2 = **2'-6"** (762)	50	50	50	50	50	50	45
(A + B) ÷ 2 = **2'-0"** (610)	50	50	50	50	50	50	50
C = (length of join)	**5'-0"** (1524)	**5'-6"** (1676)	**6'-0"** (1829)	**6'-6"** (1981)	**7'-0"** (2134)	**7'-6"** (2286)	**8'-0"** (2438)

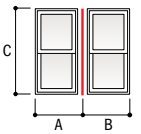

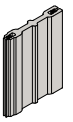

½" (13) x 3 ¼" (83)
Fiberglass Joining Material

- Numerical values in charts represent structural pressure only.
- Structural performance of any combination is only as high as the lowest structural performance of any individual unit or joining material in the combination.
- Easy Connect and other fiberglass joins are certified up to PG50 when installed according to Andersen installation instructions.
- Andersen® products must be installed and anchored properly according to joining and installation instructions to meet rated structural performance. Refer to product joining and installation instructions at andersenwindows.com.
- Dimensions in parentheses are in millimeters.
- Contact your Andersen supplier for joining windows to patio doors and for specific performance and product recommendations.
- Transom windows use picture frame type. Integral transom windows use single-hung frame type. Combination performance should be determined accordingly.

1-Way Reinforced Easy Connect Fiberglass Joining

100 Series Windows: Casement, Awning, Single-Hung, Gliding, Picture

Applicable for flanged or flangeless installations into wood, metal, concrete or masonry.

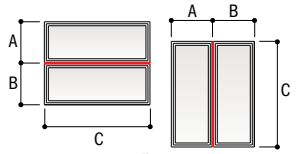

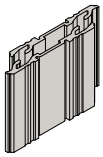

¾" (19) x 5 ⅛" (130)
Fiberglass Joining Material
For wall depths ≥ 4 9/16" (116).

Average Adjacent Window Dimension																						
(A + B) ÷ 2 = **8'-0"** (2438)	50	50	50	50	50	50	50	50	50	50	50											
(A + B) ÷ 2 = **7'-6"** (2286)	50	50	50	50	50	50	50	50	50	50	50											
(A + B) ÷ 2 = **7'-0"** (2134)	50	50	50	50	50	50	50	50	50	50	50											
(A + B) ÷ 2 = **6'-6"** (1981)	50	50	50	50	50	50	50	50	50	50	50											
(A + B) ÷ 2 = **6'-0"** (1829)	50	50	50	50	50	50	50	50	50	50	50	50	50									
(A + B) ÷ 2 = **5'-6"** (1676)	50	50	50	50	50	50	50	50	50	50	50	50	50									
(A + B) ÷ 2 = **5'-0"** (1524)	50	50	50	50	50	50	50	50	50	50	50	50	50									
(A + B) ÷ 2 = **4'-6"** (1372)	50	50	50	50	50	50	50	50	50	50	50	50	50									
(A + B) ÷ 2 = **4'-0"** (1219)	50	50	50	50	50	50	50	50	50	50	50	50	50	50	50	50	50	37	35	28	27
(A + B) ÷ 2 = **3'-9"** (1372)	50	50	50	50	50	50	50	50	50	50	50	50	50	50	50	50	50	42	40	30	28
(A + B) ÷ 2 = **3'-6"** (1067)	50	50	50	50	50	50	50	50	50	50	50	50	50	50	50	50	50	44	42	32	30
(A + B) ÷ 2 = **3'-0"** (914)	50	50	50	50	50	50	50	50	50	50	50	50	50	50	50	50	50	50	48	36	34
(A + B) ÷ 2 = **2'-6"** (762)	50	50	50	50	50	50	50	50	50	50	50	50	50	50	50	50	50	50	50	42	40
(A + B) ÷ 2 = **2'-0"** (610)	50	50	50	50	50	50	50	50	50	50	50	50	50	50	50	50	50	50	50	50	50
(A + B) ÷ 2 = **1'-6"** (457)	50	50	50	50	50	50	50	50	50	50	50	50	50	50	50	50	50	50	50	50	50
C = (length of join)	**2'-0"** (610)	**2'-6"** (762)	**3'-0"** (914)	**3'-6"** (1067)	**4'-0"** (1219)	**4'-6"** (1372)	**5'-0"** (1524)	**5'-6"** (1676)	**6'-0"** (1829)	**6'-6"** (1981)	**7'-0"** (2134)	**7'-6"** (2286)	**8'-0"** (2438)	**8'-6"** (2591)	**9'-0"** (2743)	**9'-6"** (2896)	**10'-0"** (3048)	**10'-6"** (3200)	**11'-0"** (3353)	**11'-6"** (3505)	**12'-0"** (3658)

2-Way Reinforced Easy Connect Fiberglass Joining*

100 Series Windows: Casement, Awning, Single-Hung, Gliding, Picture

Applicable for flanged or flangeless installations into wood, metal, concrete or masonry.

Average Adjacent Window Dimension																						
(A + B) ÷ 2 = **6'-0"** (1829)	50	50	50	50	50	50	50	50	50	50	50	50	50	50	49	44	40	26	23	21	20
(A + B) ÷ 2 = **5'-6"** (1676)	50	50	50	50	50	50	50	50	50	50	50	50	50	50	50	48	43	28	26	23	21
(A + B) ÷ 2 = **5'-0"** (1524)	50	50	50	50	50	50	50	50	50	50	50	50	50	50	50	50	48	32	30	26	24
(A + B) ÷ 2 = **4'-6"** (1372)	50	50	50	50	50	50	50	50	50	50	50	50	50	50	50	50	50	36	33	27	25
(A + B) ÷ 2 = **4'-0"** (1219)	50	50	50	50	50	50	50	50	50	50	50	50	50	50	50	50	50	41	37	30	28
(A + B) ÷ 2 = **3'-9"** (1372)	50	50	50	50	50	50	50	50	50	50	50	50	50	50	50	50	50	43	40	32	30
(A + B) ÷ 2 = **3'-6"** (1067)	50	50	50	50	50	50	50	50	50	50	50	50	50	50	50	50	50	47	42	35	32
(A + B) ÷ 2 = **3'-0"** (914)	50	50	50	50	50	50	50	50	50	50	50	50	50	50	50	50	50	50	50	40	37
(A + B) ÷ 2 = **2'-6"** (762)	50	50	50	50	50	50	50	50	50	50	50	50	50	50	50	50	50	50	50	43	40
(A + B) ÷ 2 = **2'-0"** (610)	50	50	50	50	50	50	50	50	50	50	50	50	50	50	50	50	50	50	50	50	50
(A + B) ÷ 2 = **1'-6"** (457)	50	50	50	50	50	50	50	50	50	50	50	50	50	50	50	50	50	50	50	50	50
C = (length of join)	**2'-0"** (610)	**2'-6"** (762)	**3'-0"** (914)	**3'-6"** (1067)	**4'-0"** (1219)	**4'-6"** (1372)	**5'-0"** (1524)	**5'-6"** (1676)	**6'-0"** (1829)	**6'-6"** (1981)	**7'-0"** (2134)	**7'-6"** (2286)	**8'-0"** (2438)	**8'-6"** (2591)	**9'-0"** (2743)	**9'-6"** (2896)	**10'-0"** (3048)	**10'-6"** (3200)	**11'-0"** (3353)	**11'-6"** (3505)	**12'-0"** (3658)

Red lines represent reinforced joins.
Blue lines represent non-reinforced joins.

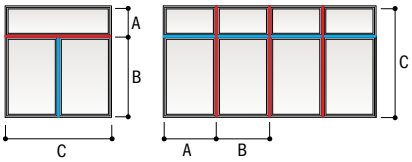

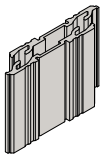

¾" (19) x 5 ⅛" (130)
Fiberglass Joining Material
For wall depths ≥ 4 9/16" (116).

- Numerical values in charts represent structural pressure only.
- Structural performance of any combination is only as high as the lowest structural performance of any individual unit or joining material in the combination.
- Easy Connect and other fiberglass joins are certified up to PG50 when installed according to Andersen installation instructions.
- Andersen® products must be installed and anchored properly according to joining and installation instructions to meet rated structural performance. Refer to product joining and installation instructions at andersenwindows.com.
- Dimensions in parentheses are in millimeters.
- Contact your Andersen supplier for joining windows to patio doors and for specific performance and product recommendations.
- Transom windows use picture frame type. Integral transom windows use single-hung frame type. Combination performance should be determined accordingly.
- Performance of two-way combinations may be limited by non-reinforced joins 6' (1829) or greater in length. Verify performance of non-reinforced joins within two-way combinations using the appropriate non-reinforced joining table.

*All two-way joining requires both non-reinforced and reinforced elements. Intersecting reinforced or non-reinforced joins are not available.

1-Way Reinforced Easy Connect Fiberglass Joining

100 Series Patio Doors: Gliding Patio Doors, Patio Door Sidelights and Transoms

Applicable for field joining kits only.

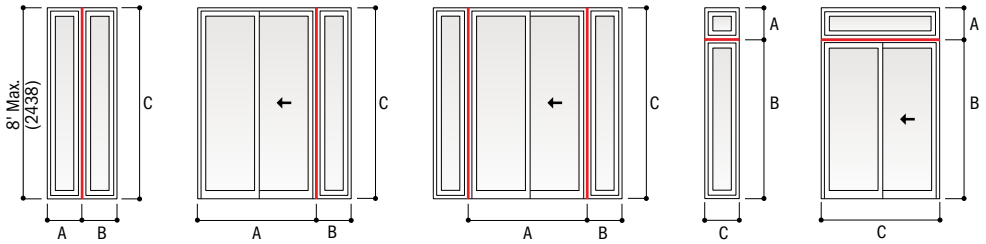

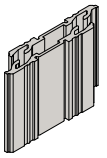

¾" (19) x 5 ⅛" (130)
Fiberglass Joining Material

Average Adjacent Door/Sidelight/Transom Dimension													
(A + B) ÷ 2 = **8'-0"** (2438)	30	30	30	30	30	30	30	30	30	30	30	30	30
(A + B) ÷ 2 = **7'-6"** (2286)	30	30	30	30	30	30	30	30	30	30	30	30	30
(A + B) ÷ 2 = **7'-0"** (2134)	30	30	30	30	30	30	30	30	30	30	30	30	30
(A + B) ÷ 2 = **6'-6"** (1981)	30	30	30	30	30	30	30	30	30	30	30	30	30
(A + B) ÷ 2 = **6'-0"** (1829)	30	30	30	30	30	30	30	30	30	30	30	30	30
(A + B) ÷ 2 = **5'-6"** (1676)	30	30	30	30	30	30	30	30	30	30	30	30	30
(A + B) ÷ 2 = **5'-0"** (1524)	30	30	30	30	30	30	30	30	30	30	30	30	30
(A + B) ÷ 2 = **4'-6"** (1372)	30	30	30	30	30	30	30	30	30	30	30	30	30
(A + B) ÷ 2 = **4'-0"** (1219)	30	30	30	30	30	30	30	30	30	30	30	30	30
(A + B) ÷ 2 = **3'-9"** (1372)	30	30	30	30	30	30	30	30	30	30	30	30	30
(A + B) ÷ 2 = **3'-6"** (1067)	30	30	30	30	30	30	30	30	30	30	30	30	30
(A + B) ÷ 2 = **3'-0"** (914)	30	30	30	30	30	30	30	30	30	30	30	30	30
(A + B) ÷ 2 = **2'-6"** (762)	30	30	30	30	30	30	30	30	30	30	30	30	30
(A + B) ÷ 2 = **2'-0"** (610)	30	30	30	30	30	30	30	30	30	30	30	30	30
(A + B) ÷ 2 = **1'-6"** (457)	30	30	30	30	30	30	30	30	30	30	30	30	30
C = (length of join)	**2'-0"** (610)	**2'-6"** (762)	**3'-0"** (914)	**3'-6"** (1067)	**4'-0"** (1219)	**4'-6"** (1372)	**5'-0"** (1524)	**5'-6"** (1676)	**6'-0"** (1829)	**6'-6"** (1981)	**7'-0"** (2134)	**7'-6"** (2286)	**8'-0"** (2438)

- Numerical values in charts represent structural pressure only.
- Structural performance of any combination is only as high as the lowest structural performance of any individual unit or joining material in the combination.
- Easy Connect and other fiberglass joins are certified up to PG50 when installed according to Andersen installation instructions.
- Andersen® products must be installed and anchored properly according to joining and installation instructions to meet rated structural performance. Refer to product joining and installation instructions at andersenwindows.com.
- Dimensions in parentheses are in millimeters.
- Contact your Andersen supplier for joining windows to patio doors and for specific performance and product recommendations.

Altitude Limits

The chart below gives the altitude limit in feet for 100 Series products in this guide. If the installation of a given product is at an altitude greater than that shown in this chart, a capillary breather tube must be ordered. Be aware that the use of a capillary breather tube eliminates argon gas blend fill and will result in a slightly lower thermal performance (approximately 0.02 increase in window U-Factor). For NFRC certified total unit performance on units with capillary breather tubes for higher altitude applications, see your Andersen supplier.

The use of dual-pane insulating glass without capillary breather tubes at altitudes higher than its rating will result in severe glass distortion, increased glass breakage potential and a risk of seal failure. Smaller windows are most affected by altitude changes. An increase in altitude results in a decrease in atmospheric pressure. A sealed insulating glass unit attempts to combat this change by increasing its volume to reduce its pressure. One way to increase its volume is by glass deflection. A smaller window is stiffer and does not deflect as much as a larger window; therefore, it cannot relieve the pressure as readily. Thus, the load applied to the glass is greater, resulting in a greater risk for breakage. Another way the window tries to increase its volume is by increasing the edge area; i.e., the seal area. The increased pressure applied to the edge seal load for a smaller window is therefore greater, increasing the chance for seal failure.

Andersen® Product	3,000	4,000	5,000	6,000	7,000	8,000	9,000	10,000
100 Series Casement Windows		1620 1626 1630 1636 1640 1646 1650 1656 1660	2020 2026 2030 2036 2040 2046 2050 2056 2060 2620 3020	2660	2626 2630 2636 2640 2646 2650 2656 3026	3056 3060	3030 3036 3040 3046 3050	
100 Series Awning Windows		1616 1620 1626 1630 2016 2616 3016 3616 4016	2020 2026 2030 2620 3020 3620 4020		2626 2630 3026 3626 4026		3030 3630 4030	
100 Series Single-Hung Windows	1620 2020 2620 3020 3620 4020	1626 1630 1636 1640 1646 1650 1656 1660 1666 1670 1676 2026 2030 2626 2630 3026 3626 4026 4030	2036 2040 2046 2050 2056 2060 2066 2070 2076 2636 3036 3636 4036	2640 3040 3640 4040	2646 2650 2656 2660 2666 2670 2676 3046 3646 4046	3050 3650 4050	3056 3060 3066 3070 3076 3656 4056	3660 3666 3670 3676 4060 4066 4070 4076
100 Series Gliding Windows Active-Stationary or Stationary-Active	2010 2016 2020 2026 2030 2036 2040 2046 2050 2056 2060 2610 2616 3010 3016 3610 3616 4010 4016 4610 4616 5010 5016 5610 5616 6010 6016	2620 2626 2630 2636 2640 2646 2650 2656 2660 3020 3026 3030 3036 3040 3046 3050 3056 3060 3620 4020 4620 5020 5620 6020	3626 3630 3636 3640 3646 3650 3656 3660 4026 4626 5026 5626 6026	4030 4036 4040 4046 4050 4056 4060	4630 4636 4640 4646 4650 4656 4660 5030 5060 5630 6030	5036 5040 5046 5050 5056 5656 5660	5636 5640 5646 5650 6036 6050 6056 6060	6040 6046
100 Series Gliding Windows Active-Stationary-Active		5016 5020 5026 5030 5036 5040 5046 5050 5056 5060 6016 6020 6026 6030 7016 7616 8016 8616 9016 10016 11016 12016	6036 6040 6046 6050 6056 6060 7020 7026 7030 7036 7620 8020 8620 9020 10020 11020 12020	7040 7046 7050 7056 7060 7626 7630 7636 8026 8030 8036 8040	7640 7646 7650 7656 7660 8046 8050 8056 8060 8626 8630 8636 8640 9026 9030 9036 9040 9046 10026 11026 12026	8646 8650 8656 8660 10030 10036 10040 10046 10050 11056	9050 9056 9060 10060 11030 11036 11040 11046 11050 12030 12050 12056 12060	10056 11060 12036 12040 12046
100 Series Picture, Transom and Specialty Windows	1010 1016 1020 1026 1030 1036 1040 1046 1050 1056 1060 1066 1070 1076 1080 1610 2010 2610 3010 3610 4010 4610 5010 5610 6010 6610 7010 7610 8010	1616 1620 1626 1630 1636 1640 1646 1650 1656 1660 1666 1670 1676 1680 2016 2020 2026 2030 2036 2040 2046 2050 2056 2060 2066 2070 2076 2080 2616 2620 3016 3020 3616 3620 4016 4020 4616 4620 5016 5020 5616 5620 6016 6020 6616 6620 7016 7020 7616 7620 8016 8020	2626 2630 2636 2640 2646 2650 2656 2660 2666 2670 2676 2680 3026 3626 4026 4626 5026 5626 6026 6626 7026 7626 8026		3030 3036 3040 3046 3050 3056 3060 3066 3070 3076 3080 3630 4030 4630 5030 5630 6030 6630 7030 7630 8030		3636 3640 3646 3650 3656 3660 3666 3670 3676 3680 4036 4636 5036 5636 6036 6636 7036 7636 8036	4040 4046 4050 4056 4060 4066 4070 4076 4080 4640 4646 4650 4656 4660 4666 4670 4676 4680 5040 5046 5050 5056 5060 5066 5070 5076 5080 5640 5646 5650 5656 5660 5666 5670 5676 5680 6040 6046 6050 6055 6060 6066 6070 6076 6080 6640 6646 6650 6656 6660 7040 7046 7050 7056 7060 7640 7646 7650 7656 7660 8040 8046 8050 8056 8060
100 Series Gliding Patio Doors								5068 50611 5080 6068 60611 6080 8068 80611 8080
100 Series Patio Door Sidelights	1368 13611 1380	1668 16611 1680				2068 20611 2080		2668 26611 2680 3068 30611 3080 4068 40611 4080
100 Series Patio Door Transoms	1313 1316 1320 1613 1616 1620 2013 2016 2613 2616 3013 3016 4013 4016 5013 5016 6013 6016 8013 8016	2020 2620 3020 4020 5020 6020 8020						

• Deflection of glass will occur on units with larger glass areas. If interior/exterior grilles are used on single-hung windows, gliding windows or gliding patio doors at higher altitudes without cappillary breather tubes, some interference may occur, affecting operation.
• Altitude limits for patio doors shown in two-panel configurations. These limits also qualify for same-size panels used in single-panel configurations.
• **Contact your Andersen supplier for altitude limits for custom-sized windows and doors.**

PERFORMANCE STANDARDS

The Window and Door Manufacturers Association (WDMA), the American Architectural Manufacturers Association (AAMA) and the Canadian Standards Association (CSA) jointly release the North American Fenestration Standard/Specification for Windows, Doors and Skylights (NAFS). NAFS is also referred to as AAMA/WDMA/CSA 101/I.S.2/A440, which is how the International Code Council (ICC) lists this standard in the International Residential Code (IRC) and International Building Code (IBC) as the means to indicate the window, door or skylights design pressure rating used to determine compliance to the job site design pressure requirements.

A product only achieves a "Performance Grade" or "PG" rating when it complies with all of the NAFS performance requirements such as ease of operation, air infiltration resistance, resistance to water penetration and resistance to forced entry, etc. A "Design Pressure Rating" or "DP" rating only depicts the design and structural load performance.

Performance Classes

The NAFS Standard/Specification defines requirements for four performance classes. Performance classes are designated R, LC, CW and AW. This classification system provides for several levels of performance. Product selection is always based on the performance and building code requirements of the particular project.

Elements of Performance Grade (PG) Designations

In order to qualify for a given performance grade (PG), test specimens need to pass all required performance tests for the following, in addition to all required auxiliary (durability) and applicable material/component tests (not shown here) for the applicable product type and desired performance class:

(a) Operating force (if applicable): Maximum operating force varies by product type and performance class.

(b) Air leakage resistance: Tested in accordance with ASTM E283 at a test pressure of 1.57 psf. Allowable air infiltration for R, LC and CW class designations is 0.3 cubic feet per minute per square foot of frame (cfm/ft^2).

(c) Water penetration resistance: Tested in accordance with ASTM E547 with the specified test pressure applied per NAFS. Test consists of four cycles. Each cycle consists of five minutes with pressure applied and one minute with the pressure released, during which the water spray is continuously applied. Water spray shall be uniformly applied at a constant rate of 5 U.S. gal/ft^2 · hr.

(d) Uniform load deflection test: Tested in accordance with ASTM E330 for both positive and negative pressure (pressure defined by NAFS) with the load maintained for a period of 10 seconds. The test specimen shall be evaluated for deflection during each load for permanent damage after each load and for any effects on the normal operation of the specimen. *Starting with the 2008 version of NAFS, design pressure (DP) will only represent the "uniform load deflection test."*

(e) Uniform load structural test: Tested in accordance with ASTM E330 for both positive and negative pressure (pressure defined by NAFS) with the load maintained for a period of 10 seconds. After loads are removed, there shall be no permanent deformation in excess of 0.4% of its span and no damage to the unit, which would make it inoperable.

(f) Forced-entry resistance (if applicable): Tested in accordance with ASTM F588 (windows), F476 (swinging doors) and F842 (sliding doors) at a performance level 10 rating.

Performance Grades (PG) and Corresponding Test Pressures (psf)

Performance Class/ Performance Grade		Air Infiltration Test Pressure		Maximum Allowable Air Infiltration/ Exfiltration Rate		Water Penetration Resistance Test Pressure		Design Pressure		Structural Test Pressure	
R	LC	Pa	psf	L/s·m^2	cfm/ft^2	Pa	psf	Pa	psf	Pa	psf
15	-	75	1.57	1.5	0.30	140	2.92	720	15.04	1080	22.56
20	-	75	1.57	1.5	0.30	150	3.13	960	20.05	1440	30.08
25	25	75	1.57	1.5	0.30	180	3.76	1200	25.06	1800	37.59
30	30	75	1.57	1.5	0.30	220	4.59	1440	30.08	2160	45.11
35	35	75	1.57	1.5	0.30	260	5.43	1680	35.09	2520	52.63
40	40	75	1.57	1.5	0.30	290	6.06	1920	40.10	2880	60.15
45	45	75	1.57	1.5	0.30	330	6.89	2160	45.11	3240	67.67
50	50	75	1.57	1.5	0.30	360	7.52	2400	50.13	3600	75.19
55	55	75	1.57	1.5	0.30	400	8.35	2640	55.14	3960	82.71
60	60	75	1.57	1.5	0.30	440	9.19	2880	60.15	4320	90.23
65	65	75	1.57	1.5	0.30	470	9.82	3120	65.16	4680	97.74
70	70	75	1.57	1.5	0.30	510	10.65	3360	70.18	5040	105.26
75	75	75	1.57	1.5	0.30	540	11.28	3600	75.19	5400	112.78
80	80	75	1.57	1.5	0.30	580	12.11	3840	80.20	5760	120.30
85	85	75	1.57	1.5	0.30	620	12.94	4080	85.21	6120	127.82
90	90	75	1.57	1.5	0.30	660	13.78	4320	90.23	6480	135.34
95	95	75	1.57	1.5	0.30	682	14.25	4560	95.24	6840	142.86
100	100	75	1.57	1.5	0.30	718	15.00	4800	100.25	7200	150.38

HALLMARK CERTIFICATION

The Window and Door Manufacturers Association (WDMA)-sponsored Hallmark Certification Program provides manufacturers with certification to the AAMA/WDMA/CSA 101/I.S.2/A440 Standard and is designed to provide builders, architects, specifiers and consumers with an easily recognizable means of identifying products that have been manufactured and tested in accordance with NAFS (AAMA/WDMA/CSA 101/I.S.2/A440) industry standards and other applicable performance standards. Conformance is determined by periodic in-plant inspections by a third-party administrator. Inspections include auditing licensee quality control procedures and processes, and a review to confirm products are manufactured in accordance with the appropriate performance standards. Periodic testing of representative product constructions and components by an independent testing laboratory is also required. When all of the program requirements are met, the licensee is authorized to use the WDMA Hallmark registered logo on their certification label as a means of identifying products and their performance ratings.

Products successfully obtaining Hallmark Certification will be labeled with a three-part code, which includes performance class, performance grade and size tested. In addition to this mandatory requirement, you are allowed to list the design pressure on a separate line.

WINDOW & DOOR MANUFACTURERS ASSOCIATION WDMA Hallmark Certified www.wdma.com	Andersen Corporation 100 SERIES CASEMENT WINDOW Manufacturer stipulates certification as indicated below.
STANDARD	RATING
AAMA/WDMA/CSA 101/I.S.2/A440-11	Class LC(1) – PG40(2) – Size Tested 71.5 x 71.5 in.(3) DP+40/-45(4)
AAMA/WDMA/CSA 101/I.S.2/A440-08	Class LC(1) – PG40(2) – Size Tested 71.5 x 71.5 in.(3) DP+40/-45(4)

(1) – Performance Class

(2) – Performance Grade

(3) – Size Tested

(4) – Design Pressure

In the example above, the performance class is LC, the performance grade (PG) is 40 pounds per square foot (psf) and the size tested is 71.5" x 71.5". What this means to the specifier is, based on the performance grade chart, the laboratory-tested air infiltration was less than 0.3 cfm/ft^2 (test pressure is always 1.57 psf and the allowable airflow is 0.3 cfm/ft^2), the product tested successfully resisted a laboratory water penetration test at a test pressure of 6.0 psf, the product tested successfully withstood a laboratory positive test pressure of 60 psf and a laboratory negative test pressure of 67 psf, and the product tested passed the laboratory requirements for operational force and forced-entry resistance. Based on this test, all products of the same design that are smaller than the tested size can be labeled with this product performance rating.

IMPORTANT

Building codes prescribe design pressure based on a variety of criteria (i.e., windspeed zone, building height, building type, job site exposure, etc.). Design pressures derived from Performance Grade (PG) test requirements should be used to determine compliance to building code required design pressures. Structural test pressures, which are tested at 1.5 times the design pressure, should **not** be used for determining design pressure code compliance. In the example above, a PG 40 performance grade rating, which passes a 40 psf design pressure, should be used for determining code compliance, not the structural test pressure of 60 psf.

If you need further details about how Andersen® products perform to this standard, contact your Andersen supplier.

If you need further information about the AAMA/WDMA/CSA 101/I.S.2/A440 standard or the Hallmark Certification Program, please contact: WDMA, 2001 K Street NW, 3rd Floor North, Washington, D.C. 20006. Phone: 202-367-1157 Website: **wdma.com**

Where designated, Andersen products are tested, certified and labeled to the requirements of the Hallmark Certification Program. Actual performance may vary based on variations in manufacturing, shipping, installation, environmental conditions and conditions of use.

Performance Grade and Air Infiltration Ratings

For current performance information, please visit **andersenwindows.com**.

Andersen® 100 Series Product	AAMA/WDMA/CSA 101/I.S.2/A440 Performance Grade (PG)	+/- Corresponding Design Pressure (DP)	Air Infiltration CFM/FT²
Casement Windows			
Single and Twin (venting/stationary)	Class LC-PG40 Size Tested 71.5" x 71.5"	40/45	< 0.2
Single and Twin, PG Upgrade (venting/stationary)	Class LC-PG50 Size Tested 71.5" x 71.5"	50/50*	< 0.2
Picture With Flanking Casements	Class LC-PG40 Size Tested 143.5" x 71.5"	40/40	< 0.2
Picture With Flanking Casements, PG Upgrade	Class LC-PG50 Size Tested 143.5" x 65.5"	50/50*	< 0.2
Awning Windows			
Single and Twin (venting/stationary)	Class LC-PG40 Size Tested 47.5" x 95.5"	40/45	< 0.2
Single and Twin, PG Upgrade (venting/stationary)	Class LC-PG50 Size Tested 47.5" x 95.5"	50/50*	< 0.2
Picture Over Awning	Class LC-PG40 Size Tested 47.5" x 95.5"	40/45	< 0.2
Picture Over Awning, PG Upgrade	Class LC-PG50 Size Tested 47.5" x 95.5"	50/50*	< 0.2
Single-Hung Windows			
Arch Single-Hung	Class LC-PG30 Size Tested 41.5" x 95.0"	30/30	< 0.2
Arch Single-Hung, PG Upgrade	Class LC-PG50 Size Tested 41.5" x 83.0"	50/50*	< 0.2
Single-Hung	Class LC-PG30 Size Tested 47.5" x 77.5"	30/30	< 0.2
Single-Hung, PG Upgrade	Class LC-PG50 Size Tested 47.5" x 77.5"	50/50*	< 0.2
Twin and Triple Single-Hung	Class LC-PG30 Size Tested 143.5" x 71.5"	30/30	< 0.2
Twin and Triple Single-Hung, PG Upgrade	Class LC-PG50 Size Tested 143.5" x 65.5"	50/50*	< 0.2
Transom Over Single-Hung	Class LC-PG30 Size Tested 47.5" x 95.5"	30/30	< 0.2
Transom Over Single-Hung, PG Upgrade	Class LC-PG50 Size Tested 47.5" x 95.5"	50/50*	< 0.2
Picture With Flanking Single-Hungs	Class LC-PG30 Size Tested 143.5" x 71.5"	30/30	< 0.2
Picture With Flanking Single-Hungs, PG Upgrade	Class LC-PG50 Size Tested 143.5" x 59.5"	50/50*	< 0.2
Gliding Windows			
Gliding (active-stationary or stationary-active)	Class LC-PG30 Size Tested 71.5" x 71.5"	30/30	< 0.2
Gliding, PG Upgrade (active-stationary or stationary-active)	Class LC-PG50 Size Tested 71.5" x 59.5"	50/50*	< 0.2
Picture Over Gliding (active-stationary or stationary-active)	Class LC-PG30 Size Tested 59.5" x 83.5"	30/30	< 0.2
Gliding (active-stationary-active)	Class LC-PG30 Size Tested 143.5" x 71.5"	30/30	< 0.2
Gliding, PG Upgrade (active-stationary-active)	Class LC-PG50 Size Tested 101.5" x 59.5"	50/50*	< 0.2
Picture Over Gliding (active-stationary-active)	Class LC-PG30 Size Tested 107.5" x 83.5"	30/30	< 0.2
Picture, Transom & Specialty Windows			
Picture, Transom and Specialty	Class LC-PG40 Size Tested 95.5" x 84.3"	40/40	< 0.2
Picture, Transom and Specialty, PG Upgrade	Class LC-PG50 Size Tested 95.5" x 71.5"	50/50*	< 0.2
Gliding Patio Doors	Class LC-PG30 Size Tested 95.3" x 95.5"	30/30	< 0.2
Patio Door Sidelights	Class LC-PG30 Size Tested 47.3" x 95.3"	30/30	< 0.2
Patio Door Transoms	Class LC-PG30 Size Tested 95.3" x 23.3"	30/30	< 0.2

For windows with flush fin frame, see chart below.

For sound transmission ratings, see page 114.

- Performance Grade (PG) ratings may vary from tested performance rating for larger or smaller units of a particular type.
- This data is accurate as of August 2023. Due to ongoing product changes, updated test results or new industry standards, this data may change over time.
- Where designated, Andersen products are certified and labeled to the requirements of the Hallmark Certification Program. Actual performance may vary based on variations in manufacturing, shipping, installation, environmental conditions and conditions of use.
- Contact your Andersen supplier for more information.
- PG upgrade ratings do not apply to windows with insert frames.
- Data does not apply to windows with flush fin frames.

*Available for select sizes. Contact your Andersen supplier.

Performance Grade and Air Infiltration Ratings for Windows With Flush Fin Frames

For current performance information, please visit **andersenwindows.com**.

Andersen® 100 Series Product	AAMA/WDMA/CSA 101/I.S.2/A440 Performance Grade (PG)	+/- Corresponding Design Pressure (DP)	Air Infiltration CFM/FT²
Casement Windows			
Single and Twin (venting/stationary)	Class LC-PG40 Size Tested 71.5" x 71.5"	40/45	< 0.2
Awning Windows			
Single and Twin (venting/stationary)	Class LC-PG40 Size Tested 47.5" x 95.5"	40/45	< 0.2
Picture Over Awning	Class LC-PG40 Size Tested 47.5" x 95.5"	40/45	< 0.2
Single-Hung Windows			
Single-Hung	Class LC-PG30 Size Tested 47.5" x 89.5"	30/30	< 0.2
Twin and Triple Single-Hung	Class LC-PG30 Size Tested 143.5" x 71.5"	30/30	< 0.2
Gliding Windows			
Gliding (active-stationary or stationary-active)	Class LC-PG30 Size Tested 71.5" x 71.5"	30/30	< 0.2
Gliding (active-stationary-active)	Class LC-PG30 Size Tested 143.5" x 71.5"	30/30	< 0.2
Picture, Transom & Specialty Windows	Class LC-PG40 Size Tested 95.5" x 84.3"	40/40	< 0.2

- Performance Grade (PG) ratings may vary from tested performance rating for larger or smaller units of a particular type.
- This data is accurate as of August 2023. Due to ongoing product changes, updated test results or new industry standards, this data may change over time.
- Where designated, Andersen products are certified and labeled to the requirements of the Hallmark Certification Program. Actual performance may vary based on variations in manufacturing, shipping, installation, environmental conditions and conditions of use.
- Contact your Andersen supplier for more information.
- PG upgrades are not available for windows with flush fin frames.
- Windows with flush fin frame are available in select Southwestern states including Arizona, California, Nevada, New Mexico and Utah. Limited configuration availability. See your Andersen supplier for more information.

Sound Transmission Ratings

For current performance information, please visit **andersenwindows.com**.

Andersen® 100 Series Product	STANDARD GLASS		STC UPGRADE GLASS	
	Sound Transmission Class (STC)	Outdoor/Indoor Transmission Class (OITC)	Sound Transmission Class (STC)	Outdoor/Indoor Transmission Class (OITC)
Casement Windows				
Single (venting/stationary)	30	25	33	28
Single, PG Upgrade (venting/stationary)	30	25	33	28
Awning Windows				
Single (venting/stationary)	-	-	-	-
Single, PG Upgrade (venting/stationary)	-	-	-	-
Single-Hung Windows				
Arch Single-Hung	28	23	32	26
Arch Single-Hung, PG Upgrade	28	23	32	26
Single-Hung	28	23	32	26
Single-Hung, PG Upgrade	28	23	32	26
Gliding Windows				
Gliding (active-stationary or stationary-active)	-	-	32	27
Gliding, PG Upgrade (active-stationary or stationary-active)	-	-	32	27
Gliding (active-stationary-active)	-	-	-	-
Gliding, PG Upgrade (active-stationary-active)	-	-	-	-
Picture, Transom & Specialty Windows				
Picture and Specialty – 1 3/8" Flange Setback, 1" Flange Setback, No Flange and Insert Frames	29	24	32	27
Picture and Specialty, PG Upgrade – 1 3/8" Flange Setback, 1" Flange Setback, No Flange and Insert Frames	29	24	32	27
Picture and Specialty – Flush Fin Frame	29	24	32	27
Picture and Specialty, PG Upgrade – Flush Fin Frame	29	24	32	27
Transom	-	-	-	-
Transom, PG Upgrade	-	-	-	-
Gliding Patio Doors	28	23	29	25
Patio Door Sidelights	-	-	-	-
Patio Door Transoms	-	-	31	26

- Sound Transmission Class (STC) and Outdoor/Indoor Transmission Class (OITC) ratings are for individual units based on independent tests and represent entire unit.
- This data is accurate as of August 2023. Due to ongoing product changes, updated test results or new industry standards, this data may change over time.
- Contact your Andersen supplier for more information.
- Windows with flush fin frame are available in select Southwestern states including Arizona, California, Nevada, New Mexico and Utah. Limited configuration availability. See your Andersen supplier for more information.

Center of Glass Performance Data

For current performance information, please visit **andersenwindows.com**.

Andersen® 100 Series Product	VT[1]	SC[2]	SHGC[3]	RHG[4]	Fading Tuv[5]	Fading Tdw[6]	%RH @ center[7]	IGST[8]
Low-E								
Casement, Awning, Single-Hung, Gliding and Transom Windows (all frames types)	72%	0.48	0.41	98	16%	33%	61%	56°F
Picture and Specialty Windows – Flush Fin Frame	72%	0.48	0.41	98	16%	33%	61%	56°F
Picture and Specialty Windows – 1 3/8" Flange Setback, 1" Flange Setback, No Flange, Insert Frames	72%	0.47	0.41	98	16%	33%	60%	55°F
Gliding Patio Doors	72%	0.47	0.41	98	16%	33%	60%	55°F
Patio Door Sidelights and Transoms	72%	0.47	0.41	98	16%	33%	60%	55°F
Low-E With HeatLock® Technology								
Casement, Awning, Single-Hung, Gliding and Transom Windows (all frames types)	70%	0.47	0.41	96	16%	33%	44%	47°F
Picture and Specialty Windows – Flush Fin Frame	70%	0.47	0.41	96	16%	33%	44%	47°F
Picture and Specialty Windows – 1 3/8" Flange Setback, 1" Flange Setback, No Flange, Insert Frames	70%	0.47	0.40	95	16%	33%	44%	47°F
Gliding Patio Doors	70%	0.47	0.40	95	16%	33%	44%	47°F
Patio Door Sidelights and Transoms	70%	0.47	0.40	95	16%	33%	44%	47°F
Low-E SmartSun™								
Casement, Awning, Single-Hung, Gliding and Transom Windows (all frames types)	65%	0.31	0.27	66	5%	21%	62%	56°F
Picture and Specialty Windows – Flush Fin Frame	65%	0.31	0.27	66	5%	21%	62%	56°F
Picture and Specialty Windows – 1 3/8" Flange Setback, 1" Flange Setback, No Flange, Insert Frames	65%	0.31	0.27	65	5%	21%	61%	56°F
Gliding Patio Doors	65%	0.31	0.27	65	5%	21%	61%	56°F
Patio Door Sidelights and Transoms	65%	0.31	0.27	65	5%	21%	61%	56°F
Low-E SmartSun With HeatLock Technology								
Casement, Awning, Single-Hung, Gliding and Transom Windows (all frames types)	63%	0.31	0.27	64	5%	21%	46%	48°F
Picture and Specialty Windows – Flush Fin Frame	63%	0.31	0.27	64	5%	21%	46%	48°F
Picture and Specialty Windows – 1 3/8" Flange Setback, 1" Flange Setback, No Flange, Insert Frames	63%	0.31	0.27	63	5%	21%	44%	47°F
Gliding Patio Doors	63%	0.31	0.27	63	5%	21%	44%	47°F
Patio Door Sidelights and Transoms	63%	0.31	0.27	63	5%	21%	44%	47°F
Sun								
Casement, Awning, Single-Hung, Gliding and Transom Windows (all frames types)	40%	0.29	0.25	61	16%	24%	60%	55°F
Picture and Specialty Windows – Flush Fin Frame	40%	0.29	0.25	61	16%	24%	60%	55°F
Picture and Specialty Windows – 1 3/8" Flange Setback, 1" Flange Setback, No Flange, Insert Frames	40%	0.29	0.25	60	16%	24%	59%	55°F
Gliding Patio Doors	40%	0.29	0.25	60	16%	24%	59%	55°F
Patio Door Sidelights and Transoms	40%	0.29	0.25	60	16%	24%	59%	55°F
Low-E PassiveSun								
Casement, Awning, Single-Hung, Gliding and Transom Windows (all frames types)	79%	0.79	0.69	161	29%	42%	60%	55°F
Picture and Specialty Windows – Flush Fin Frame	79%	0.79	0.69	161	29%	42%	60%	55°F
Picture and Specialty Windows – 1 3/8" Flange Setback, 1" Flange Setback, No Flange, Insert Frames	79%	0.79	0.69	161	29%	42%	59%	55°F
Gliding Patio Doors	79%	0.79	0.69	161	29%	42%	59%	55°F
Patio Door Sidelights and Transoms	79%	0.79	0.69	161	29%	42%	59%	55°F
Low-E PassiveSun With HeatLock Technology								
Casement, Awning, Single-Hung, Gliding and Transom Windows (all frames types)	77%	0.72	0.62	146	27%	40%	42%	46°F
Picture and Specialty Windows – Flush Fin Frame	77%	0.72	0.62	146	27%	40%	42%	46°F
Picture and Specialty Windows – 1 3/8" Flange Setback, 1" Flange Setback, No Flange, Insert Frames	77%	0.72	0.63	146	27%	40%	42%	46°F
Gliding Patio Doors	77%	0.72	0.63	146	27%	40%	42%	46°F
Patio Door Sidelights and Transoms	77%	0.72	0.63	146	27%	40%	42%	46°F
Clear Dual-Pane								
Casement, Awning, Single-Hung, Gliding and Transom Windows (all frames types)	82%	0.89	0.78	186	58%	61%	39%	44°F
Picture and Specialty Windows – Flush Fin Frame	82%	0.89	0.78	186	58%	61%	39%	44°F
Picture and Specialty Windows – 1 3/8" Flange Setback, 1" Flange Setback, No Flange, Insert Frames	82%	0.89	0.78	186	58%	61%	39%	44°F
Gliding Patio Doors	82%	0.89	0.78	186	58%	61%	39%	44°F
Patio Door Sidelights and Transoms	82%	0.89	0.78	186	58%	61%	39%	44°F

• Based on NFRC testing/simulation conditions using Windows v7.4.6.0 and NFRC validated spectral data. 0°F outside temperature, 70°F inside temperature and a 15 mph wind. 1) Visible Transmittance (VT) measures how much light comes through the glass. The higher the value, from 0 to 1, the more daylight the glass lets in. Visible Transmittance is measured over the 380 to 760 nanometer portion of the solar spectrum. 2) Shading Coefficient (SC) defines the amount of heat gain through the glass compared to a single lite of clear 1/8" (3) glass. 3) Solar Heat Gain Coefficient (SHGC) defines the fraction of solar radiation admitted through the glass directly transmitted, as well as absorbed and subsequently released inward. The lower the value, the less heat is transmitted through the product. 4) Relative Heat Gain (RHG) is the amount of heat gain through a glazing incorporating U-Factor and Solar Heat Gain Coefficient. 5) Transmission Ultra-Violet Energy (Tuv). The transmission of short-wave energy in the 300-380 nanometer portion of the solar spectrum. The energy can cause fabric fading. 6) Transmission Damage Function (Tdw). The transmission of UV and visible light energy in the 300-600 nanometer portion of the solar spectrum. The value includes both the UV and visible light energy that can cause fabric fading. This rating has also been referred to as the Krochmann Damage Function. This rating better predicts fading potential than UV transmission alone. The lower the Damage Function rating, the less transmission of short-wave energy through the glass that can potentially cause fabric fading. Fabric type is also a key component of fading potential. 7) Percent relative humidity before condensation occurs at the center of glass, taken using center of glass temperature. 8) Inside glass surface temperatures are taken at the center of glass.

• This data is accurate as of November 2023. Due to ongoing product changes, updated test results or new industry standards, this data may change over time. Contact your Andersen supplier for current performance information or upgrade options.

• Contact your Andersen supplier for center of glass performance data on windows with patterned glass, tempered glass and products ordered with capillary breather tubes.

• Windows with flush fin frame are available in select Southwestern states including Arizona, California, Nevada, New Mexico and Utah. Limited configuration availability. See your Andersen supplier for more information.

NFRC Certified Total Unit Performance

For current performance information, please visit **andersenwindows.com**.

Andersen® Product	High-Performance Dual-Pane Glass Type		U-Factor[1]	SHGC[2]	VT[3]
100 Series Casement Windows AND-N-84 2.2 mm glass	Low-E	Without Grilles	0.28	0.28	0.48
		Simulated Divided Light Grilles	0.28	0.25	0.43
		Finelight™ Grilles	0.28	0.25	0.43
		Finelight With Exterior Applied Grilles	-	-	-
		Full Divided Light Grilles	0.29	0.25	0.43
	Low-E w/HeatLock®	Without Grilles	0.24	0.27	0.47
		Simulated Divided Light Grilles	0.24	0.25	0.42
		Finelight Grilles	0.24	0.25	0.42
		Finelight With Exterior Applied Grilles	-	-	-
		Full Divided Light Grilles	0.26	0.25	0.42
	Low-E SmartSun™	Without Grilles	0.27	0.18	0.43
		Simulated Divided Light Grilles	0.27	0.17	0.39
		Finelight Grilles	0.27	0.17	0.39
		Finelight With Exterior Applied Grilles	-	-	-
		Full Divided Light Grilles	0.28	0.17	0.39
	Low-E SmartSun w/HeatLock	Without Grilles	0.24	0.18	0.42
		Simulated Divided Light Grilles	0.24	0.16	0.38
		Finelight Grilles	0.24	0.16	0.38
		Finelight With Exterior Applied Grilles	-	-	-
		Full Divided Light Grilles	0.25	0.16	0.38
	Low-E Sun	Without Grilles	0.28	0.17	0.26
		Simulated Divided Light Grilles	0.28	0.16	0.24
		Finelight Grilles	0.28	0.16	0.24
		Finelight With Exterior Applied Grilles	-	-	-
		Full Divided Light Grilles	0.29	0.16	0.24
	Low-E PassiveSun®	Without Grilles	0.28	0.46	0.53
		Simulated Divided Light Grilles	0.28	0.42	0.47
		Finelight Grilles	0.28	0.42	0.47
		Finelight With Exterior Applied Grilles	-	-	-
		Full Divided Light Grilles	0.29	0.42	0.47
	Clear Dual-Pane	Without Grilles	0.41	0.52	0.55
		Simulated Divided Light Grilles	0.41	0.48	0.49
		Finelight Grilles	0.41	0.48	0.49
		Finelight With Exterior Applied Grilles	-	-	-
		Full Divided Light Grilles	0.42	0.48	0.49
100 Series Awning Windows AND-N-85 2.2 mm glass	Low-E	Without Grilles	0.28	0.28	0.48
		Simulated Divided Light Grilles	0.28	0.25	0.43
		Finelight™ Grilles	0.28	0.25	0.43
		Finelight With Exterior Applied Grilles	-	-	-
		Full Divided Light Grilles	0.29	0.25	0.43
	Low-E w/HeatLock®	Without Grilles	0.25	0.27	0.47
		Simulated Divided Light Grilles	0.25	0.25	0.42
		Finelight Grilles	0.25	0.25	0.42
		Finelight With Exterior Applied Grilles	-	-	-
		Full Divided Light Grilles	0.26	0.25	0.42
	Low-E SmartSun™	Without Grilles	0.27	0.18	0.43
		Simulated Divided Light Grilles	0.27	0.17	0.39
		Finelight Grilles	0.27	0.17	0.39
		Finelight With Exterior Applied Grilles	-	-	-
		Full Divided Light Grilles	0.28	0.17	0.39
	Low-E SmartSun w/HeatLock	Without Grilles	0.24	0.18	0.42
		Simulated Divided Light Grilles	0.24	0.16	0.38
		Finelight Grilles	0.24	0.16	0.38
		Finelight With Exterior Applied Grilles	-	-	-
		Full Divided Light Grilles	0.26	0.16	0.38
	Low-E Sun	Without Grilles	0.28	0.17	0.26
		Simulated Divided Light Grilles	0.28	0.16	0.24
		Finelight Grilles	0.28	0.16	0.24
		Finelight With Exterior Applied Grilles	-	-	-
		Full Divided Light Grilles	0.29	0.16	0.24
	Low-E PassiveSun®	Without Grilles	0.28	0.46	0.53
		Simulated Divided Light Grilles	0.28	0.42	0.47
		Finelight Grilles	0.28	0.42	0.47
		Finelight With Exterior Applied Grilles	-	-	-
		Full Divided Light Grilles	0.29	0.42	0.47
	Clear Dual-Pane	Without Grilles	0.42	0.52	0.55
		Simulated Divided Light Grilles	0.42	0.48	0.49
		Finelight Grilles	0.42	0.48	0.49
		Finelight With Exterior Applied Grilles	-	-	-
		Full Divided Light Grilles	0.42	0.48	0.49

Andersen® Product	High-Performance Dual-Pane Glass Type		U-Factor[1]	SHGC[2]	VT[3]
100 Series Single-Hung Windows AND-N-80 2.2 mm glass	Low-E	Without Grilles	0.30	0.31	0.54
		Simulated Divided Light Grilles	0.30	0.28	0.48
		Finelight™ Grilles	0.30	0.28	0.48
		Finelight With Exterior Applied Grilles	-	-	-
		Full Divided Light Grilles	0.31	0.28	0.48
	Low-E w/HeatLock®	Without Grilles	0.26	0.31	0.53
		Simulated Divided Light Grilles	0.26	0.28	0.47
		Finelight Grilles	0.26	0.28	0.47
		Finelight With Exterior Applied Grilles	-	-	-
		Full Divided Light Grilles	0.28	0.28	0.47
	Low-E SmartSun™	Without Grilles	0.29	0.21	0.49
		Simulated Divided Light Grilles	0.29	0.19	0.43
		Finelight Grilles	0.29	0.19	0.43
		Finelight With Exterior Applied Grilles	-	-	-
		Full Divided Light Grilles	0.31	0.19	0.43
	Low-E SmartSun w/HeatLock	Without Grilles	0.25	0.20	0.48
		Simulated Divided Light Grilles	0.25	0.18	0.42
		Finelight Grilles	0.25	0.18	0.42
		Finelight With Exterior Applied Grilles	-	-	-
		Full Divided Light Grilles	0.28	0.18	0.42
	Low-E Sun	Without Grilles	0.30	0.19	0.30
		Simulated Divided Light Grilles	0.30	0.17	0.27
		Finelight Grilles	0.30	0.17	0.27
		Finelight With Exterior Applied Grilles	-	-	-
		Full Divided Light Grilles	0.32	0.17	0.27
	Low-E PassiveSun®	Without Grilles	0.31	0.52	0.60
		Simulated Divided Light Grilles	0.31	0.47	0.53
		Finelight Grilles	0.31	0.47	0.53
		Finelight With Exterior Applied Grilles	-	-	-
		Full Divided Light Grilles	0.32	0.47	0.53
	Clear Dual-Pane	Without Grilles	0.46	0.59	0.62
		Simulated Divided Light Grilles	0.46	0.53	0.55
		Finelight Grilles	0.46	0.53	0.55
		Finelight With Exterior Applied Grilles	-	-	-
		Full Divided Light Grilles	0.47	0.53	0.55
100 Series Gliding Windows AND-N-81 2.2 mm glass	Low-E	Without Grilles	0.30	0.31	0.54
		Simulated Divided Light Grilles	0.30	0.28	0.48
		Finelight™ Grilles	0.30	0.28	0.48
		Finelight With Exterior Applied Grilles	-	-	-
		Full Divided Light Grilles	0.31	0.28	0.48
	Low-E w/HeatLock®	Without Grilles	0.26	0.31	0.53
		Simulated Divided Light Grilles	0.26	0.28	0.47
		Finelight Grilles	0.26	0.28	0.47
		Finelight With Exterior Applied Grilles	-	-	-
		Full Divided Light Grilles	0.28	0.28	0.47
	Low-E SmartSun™	Without Grilles	0.29	0.21	0.49
		Simulated Divided Light Grilles	0.29	0.19	0.43
		Finelight Grilles	0.29	0.19	0.43
		Finelight With Exterior Applied Grilles	-	-	-
		Full Divided Light Grilles	0.31	0.19	0.43
	Low-E SmartSun w/HeatLock	Without Grilles	0.26	0.20	0.48
		Simulated Divided Light Grilles	0.26	0.18	0.42
		Finelight Grilles	0.26	0.18	0.42
		Finelight With Exterior Applied Grilles	-	-	-
		Full Divided Light Grilles	0.28	0.18	0.42
	Low-E Sun	Without Grilles	0.30	0.19	0.30
		Simulated Divided Light Grilles	0.30	0.17	0.27
		Finelight Grilles	0.30	0.17	0.27
		Finelight With Exterior Applied Grilles	-	-	-
		Full Divided Light Grilles	0.32	0.17	0.27
	Low-E PassiveSun®	Without Grilles	0.31	0.52	0.60
		Simulated Divided Light Grilles	0.31	0.47	0.53
		Finelight Grilles	0.31	0.47	0.53
		Finelight With Exterior Applied Grilles	-	-	-
		Full Divided Light Grilles	0.32	0.47	0.53
	Clear Dual-Pane	Without Grilles	0.46	0.59	0.62
		Simulated Divided Light Grilles	0.46	0.53	0.55
		Finelight Grilles	0.46	0.53	0.55
		Finelight With Exterior Applied Grilles	-	-	-
		Full Divided Light Grilles	0.47	0.53	0.55

continued on next page

1) U-Factor defines the amount of heat loss through the total unit in BTU/hr-ft^2-°F. The lower the value, the less heat is lost through the entire product. Window values represent non-tempered glass. Use of tempered glass can increase U-Factor ratings. See andersenwindows.com/nfrc for specific performance values. Door values represent tempered glass. 2) Solar Heat Gain Coefficient (SHGC) defines the fraction of solar radiation admitted through the glass directly transmitted, as well as absorbed and subsequently released inward. The lower the value, the less heat is transmitted through the product. 3) Visible Transmittance (VT) measures how much light comes through a product (glass and frame). The higher the value, from 0 to 1, the more daylight the product lets in over the product's total unit area. Visible light transmittance is measured over the 380 to 760 nanometer portion of the solar spectrum.

- NFRC ratings are based on modeling by a third-party agency as validated by an independent test lab in compliance with NFRC program and procedural requirements.
- This data is accurate as of August 2023. Due to ongoing product changes, updated test results, or new industry standards or requirements, this data may change over time. Ratings are for sizes specified by NFRC for testing and certification. Ratings may vary depending on unit size, use of tempered glass, different grille options, glass for high altitudes, etc.
- Values are for single units with given pane thickness and 3/4" (19 mm) grilles for windows and 1" (25 mm) grilles for door products.

NFRC Certified Total Unit Performance *(continued)*

For current performance information, please visit **andersenwindows.com**.

Andersen® Product	High-Performance Dual-Pane Glass Type		U-Factor[1]	SHGC[2]	VT[3]
100 Series Picture & Specialty Windows 1 3/8" Flange Setback, 1" Flange Setback, No Flange and Insert Frames AND-N-82 3.0 mm glass	Low-E	Without Grilles	0.27	0.32	0.56
		Simulated Divided Light Grilles	0.27	0.29	0.50
		Finelight™ Grilles	0.27	0.29	0.50
		Finelight With Exterior Applied Grilles	-	-	-
		Full Divided Light Grilles	0.29	0.29	0.50
	Low-E w/HeatLock®	Without Grilles	0.23	0.32	0.55
		Simulated Divided Light Grilles	0.23	0.29	0.49
		Finelight Grilles	0.23	0.29	0.49
		Finelight With Exterior Applied Grilles	-	-	-
		Full Divided Light Grilles	0.26	0.29	0.49
	Low-E SmartSun™	Without Grilles	0.27	0.22	0.50
		Simulated Divided Light Grilles	0.27	0.20	0.45
		Finelight Grilles	0.27	0.20	0.45
		Finelight With Exterior Applied Grilles	-	-	-
		Full Divided Light Grilles	0.29	0.20	0.45
	Low-E SmartSun w/HeatLock	Without Grilles	0.23	0.21	0.49
		Simulated Divided Light Grilles	0.23	0.19	0.44
		Finelight Grilles	0.23	0.19	0.44
		Finelight With Exterior Applied Grilles	-	-	-
		Full Divided Light Grilles	0.25	0.19	0.44
	Low-E Sun	Without Grilles	0.28	0.20	0.31
		Simulated Divided Light Grilles	0.28	0.18	0.28
		Finelight Grilles	0.28	0.18	0.28
		Finelight With Exterior Applied Grilles	-	-	-
		Full Divided Light Grilles	0.30	0.18	0.28
	Low-E PassiveSun®	Without Grilles	0.28	0.54	0.61
		Simulated Divided Light Grilles	0.28	0.48	0.55
		Finelight Grilles	0.28	0.48	0.55
		Finelight With Exterior Applied Grilles	-	-	-
		Full Divided Light Grilles	0.30	0.48	0.55
	Clear Dual-Pane	Without Grilles	0.44	0.61	0.64
		Simulated Divided Light Grilles	0.44	0.55	0.57
		Finelight Grilles	0.44	0.55	0.57
		Finelight With Exterior Applied Grilles	-	-	-
		Full Divided Light Grilles	0.45	0.55	0.57
100 Series Picture & Specialty Windows Flush Fin Frame AND-N-192 3.0 mm glass	Low-E	Without Grilles	0.27	0.36	0.63
		Simulated Divided Light Grilles	0.27	0.33	0.56
		Finelight™ Grilles	0.27	0.33	0.56
		Finelight With Exterior Applied Grilles	-	-	-
		Full Divided Light Grilles	0.29	0.33	0.56
	Low-E w/HeatLock®	Without Grilles	0.23	0.35	0.61
		Simulated Divided Light Grilles	0.23	0.32	0.55
		Finelight Grilles	0.23	0.32	0.55
		Finelight With Exterior Applied Grilles	-	-	-
		Full Divided Light Grilles	0.25	0.32	0.55
	Low-E SmartSun™	Without Grilles	0.26	0.24	0.56
		Simulated Divided Light Grilles	0.26	0.22	0.51
		Finelight Grilles	0.26	0.22	0.51
		Finelight With Exterior Applied Grilles	-	-	-
		Full Divided Light Grilles	0.28	0.22	0.51
	Low-E SmartSun w/HeatLock	Without Grilles	0.22	0.23	0.55
		Simulated Divided Light Grilles	0.22	0.21	0.49
		Finelight Grilles	0.22	0.21	0.49
		Finelight With Exterior Applied Grilles	-	-	-
		Full Divided Light Grilles	0.24	0.21	0.49
	Low-E Sun	Without Grilles	0.27	0.22	0.35
		Simulated Divided Light Grilles	0.27	0.20	0.31
		Finelight Grilles	0.27	0.20	0.31
		Finelight With Exterior Applied Grilles	-	-	-
		Full Divided Light Grilles	0.29	0.20	0.31
	Low-E PassiveSun®	Without Grilles	0.28	0.60	0.69
		Simulated Divided Light Grilles	0.28	0.54	0.62
		Finelight Grilles	0.28	0.54	0.62
		Finelight With Exterior Applied Grilles	-	-	-
		Full Divided Light Grilles	0.29	0.54	0.62
	Clear Dual-Pane	Without Grilles	0.46	0.68	0.72
		Simulated Divided Light Grilles	0.46	0.61	0.64
		Finelight Grilles	0.46	0.61	0.64
		Finelight With Exterior Applied Grilles	-	-	-
		Full Divided Light Grilles	0.47	0.61	0.64

Andersen® Product	High-Performance Dual-Pane Glass Type		U-Factor[1]	SHGC[2]	VT[3]
100 Series Transom Windows AND-N-83 3.0 mm glass	Low-E	Without Grilles	0.29	0.32	0.56
		Simulated Divided Light Grilles	0.29	0.29	0.50
		Finelight™ Grilles	0.29	0.29	0.50
		Finelight With Exterior Applied Grilles	-	-	-
		Full Divided Light Grilles	0.31	0.29	0.50
	Low-E w/HeatLock®	Without Grilles	0.25	0.32	0.55
		Simulated Divided Light Grilles	0.25	0.29	0.49
		Finelight Grilles	0.25	0.29	0.49
		Finelight With Exterior Applied Grilles	-	-	-
		Full Divided Light Grilles	0.27	0.29	0.49
	Low-E SmartSun™	Without Grilles	0.28	0.22	0.50
		Simulated Divided Light Grilles	0.28	0.19	0.45
		Finelight Grilles	0.28	0.19	0.45
		Finelight With Exterior Applied Grilles	-	-	-
		Full Divided Light Grilles	0.30	0.19	0.45
	Low-E SmartSun w/HeatLock	Without Grilles	0.25	0.21	0.49
		Simulated Divided Light Grilles	0.25	0.19	0.44
		Finelight Grilles	0.25	0.19	0.44
		Finelight With Exterior Applied Grilles	-	-	-
		Full Divided Light Grilles	0.27	0.19	0.44
	Low-E Sun	Without Grilles	0.30	0.20	0.31
		Simulated Divided Light Grilles	-	-	-
		Finelight Grilles	0.30	0.18	0.28
		Finelight With Exterior Applied Grilles	-	-	-
		Full Divided Light Grilles	0.31	0.18	0.28
	Low-E PassiveSun®	Without Grilles	0.30	0.54	0.61
		Simulated Divided Light Grilles	0.30	0.48	0.55
		Finelight Grilles	0.30	0.48	0.55
		Finelight With Exterior Applied Grilles	-	-	-
		Full Divided Light Grilles	0.31	0.48	0.55
	Clear Dual-Pane	Without Grilles	0.46	0.61	0.64
		Simulated Divided Light Grilles	0.46	0.54	0.57
		Finelight Grilles	0.46	0.54	0.57
		Finelight With Exterior Applied Grilles	-	-	-
		Full Divided Light Grilles	0.47	0.54	0.57
100 Series Gliding Patio Doors AND-N-100 3.1 mm glass	Low-E	Without Grilles	0.30	0.32	0.55
		Simulated Divided Light Grilles	0.30	0.25	0.42
		Finelight™ Grilles	0.30	0.29	0.48
		Finelight With Exterior Applied Grilles	0.30	0.25	0.42
		Full Divided Light Grilles	0.35	0.25	0.42
	Low-E w/HeatLock®	Without Grilles	0.26	0.32	0.54
		Simulated Divided Light Grilles	0.26	0.25	0.41
		Finelight Grilles	0.26	0.28	0.47
		Finelight With Exterior Applied Grilles	0.26	0.25	0.41
		Full Divided Light Grilles	0.33	0.25	0.41
	Low-E SmartSun™	Without Grilles	0.29	0.21	0.50
		Simulated Divided Light Grilles	0.29	0.17	0.38
		Finelight Grilles	0.29	0.19	0.44
		Finelight With Exterior Applied Grilles	0.29	0.17	0.38
		Full Divided Light Grilles	0.34	0.17	0.38
	Low-E SmartSun w/HeatLock	Without Grilles	0.25	0.21	0.49
		Simulated Divided Light Grilles	0.25	0.17	0.37
		Finelight Grilles	0.25	0.19	0.43
		Finelight With Exterior Applied Grilles	0.25	0.17	0.37
		Full Divided Light Grilles	0.32	0.17	0.37
	Low-E Sun	Without Grilles	0.30	0.20	0.31
		Simulated Divided Light Grilles	0.30	0.16	0.23
		Finelight Grilles	0.30	0.18	0.27
		Finelight With Exterior Applied Grilles	0.30	0.16	0.23
		Full Divided Light Grilles	0.35	0.16	0.23
	Low-E PassiveSun®	Without Grilles	0.31	0.53	0.61
		Simulated Divided Light Grilles	0.31	0.41	0.46
		Finelight Grilles	0.31	0.47	0.53
		Finelight With Exterior Applied Grilles	0.31	0.41	0.46
		Full Divided Light Grilles	0.35	0.41	0.46
	Clear Dual-Pane	Without Grilles	0.46	0.60	0.63
		Simulated Divided Light Grilles	0.46	0.46	0.48
		Finelight Grilles	0.46	0.53	0.55
		Finelight With Exterior Applied Grilles	0.46	0.46	0.48
		Full Divided Light Grilles	0.49	0.46	0.48

continued on next page

1) U-Factor defines the amount of heat loss through the total unit in BTU/hr-ft²-°F. The lower the value, the less heat is lost through the entire product. Window values represent non-tempered glass. Use of tempered glass can increase U-Factor ratings. See andersenwindows.com/nfrc for specific performance values. Door values represent tempered glass. 2) Solar Heat Gain Coefficient (SHGC) defines the fraction of solar radiation admitted through the glass directly transmitted, as well as absorbed and subsequently released inward. The lower the value, the less heat is transmitted through the product. 3) Visible Transmittance (VT) measures how much light comes through a product (glass and frame). The higher the value, from 0 to 1, the more daylight the product lets in over the product's total unit area. Visible light transmittance is measured over the 380 to 760 nanometer portion of the solar spectrum.

- NFRC ratings are based on modeling by a third-party agency as validated by an independent test lab in compliance with NFRC program and procedural requirements.
- This data is accurate as of August 2023. Due to ongoing product changes, updated test results, or new industry standards or requirements, this data may change over time. Ratings are for sizes specified by NFRC for testing and certification. Ratings may vary depending on unit size, use of tempered glass, different grille options, glass for high altitudes, etc.
- Values are for single units with given pane thickness and 3/4" (19 mm) grilles for windows and 1" (25 mm) grilles for door products.
- Windows with flush fin frame are available in select Southwestern states including Arizona, California, Nevada, New Mexico and Utah. Limited configuration availability. See your Andersen supplier for more information.

NFRC Certified Total Unit Performance *(continued)*

For current performance information, please visit **andersenwindows.com**.

Andersen® Product	High-Performance Dual-Pane Glass Type		U-Factor[1]	SHGC[2]	VT[3]
100 Series Patio Door Transoms AND-N-98 3.0 mm glass	Low-E	Without Grilles	0.32	0.25	0.43
		Simulated Divided Light Grilles	0.32	0.20	0.34
		Finelight™ Grilles	0.32	0.23	0.38
		Finelight With Exterior Applied Grilles	0.32	0.20	0.34
		Full Divided Light Grilles	0.35	0.20	0.34
	Low-E w/HeatLock®	Without Grilles	0.29	0.25	0.42
		Simulated Divided Light Grilles	0.29	0.20	0.33
		Finelight Grilles	0.29	0.22	0.37
		Finelight With Exterior Applied Grilles	0.29	0.20	0.33
		Full Divided Light Grilles	0.33	0.20	0.33
	Low-E SmartSun™	Without Grilles	0.31	0.17	0.38
		Simulated Divided Light Grilles	0.31	0.14	0.30
		Finelight Grilles	0.31	0.15	0.34
		Finelight With Exterior Applied Grilles	0.31	0.14	0.30
		Full Divided Light Grilles	0.34	0.14	0.30
	Low-E SmartSun w/HeatLock	Without Grilles	0.29	0.17	0.37
		Simulated Divided Light Grilles	0.29	0.14	0.30
		Finelight Grilles	0.29	0.15	0.33
		Finelight With Exterior Applied Grilles	0.29	0.14	0.30
		Full Divided Light Grilles	0.33	0.14	0.30
	Low-E Sun	Without Grilles	0.32	0.16	0.24
		Simulated Divided Light Grilles	0.32	0.13	0.19
		Finelight Grilles	0.32	0.14	0.21
		Finelight With Exterior Applied Grilles	0.32	0.13	0.19
		Full Divided Light Grilles	0.35	0.13	0.19
	Low-E PassiveSun®	Without Grilles	0.33	0.41	0.47
		Simulated Divided Light Grilles	0.33	0.33	0.37
		Finelight Grilles	0.33	0.37	0.42
		Finelight With Exterior Applied Grilles	0.33	0.33	0.37
		Full Divided Light Grilles	0.35	0.33	0.37
	Clear Dual-Pane	Without Grilles	0.45	0.47	0.49
		Simulated Divided Light Grilles	0.45	0.38	0.38
		Finelight Grilles	0.45	0.42	0.43
		Finelight With Exterior Applied Grilles	0.45	0.38	0.38
		Full Divided Light Grilles	0.46	0.38	0.38

Andersen® Product	High-Performance Dual-Pane Glass Type		U-Factor[1]	SHGC[2]	VT[3]
100 Series Patio Door Sidelights AND-N-97 3.0 mm glass	Low-E	Without Grilles	0.31	0.25	0.43
		Simulated Divided Light Grilles	0.31	0.21	0.34
		Finelight™ Grilles	0.31	0.23	0.38
		Finelight With Exterior Applied Grilles	0.31	0.21	0.34
		Full Divided Light Grilles	0.34	0.21	0.34
	Low-E w/HeatLock®	Without Grilles	0.28	0.25	0.42
		Simulated Divided Light Grilles	0.28	0.20	0.33
		Finelight Grilles	0.28	0.23	0.37
		Finelight With Exterior Applied Grilles	0.28	0.20	0.33
		Full Divided Light Grilles	0.33	0.20	0.33
	Low-E SmartSun™	Without Grilles	0.31	0.17	0.38
		Simulated Divided Light Grilles	0.31	0.14	0.31
		Finelight Grilles	0.31	0.15	0.34
		Finelight With Exterior Applied Grilles	0.31	0.14	0.31
		Full Divided Light Grilles	0.34	0.14	0.31
	Low-E SmartSun w/HeatLock	Without Grilles	0.28	0.17	0.38
		Simulated Divided Light Grilles	0.28	0.14	0.30
		Finelight Grilles	0.28	0.15	0.34
		Finelight With Exterior Applied Grilles	0.28	0.14	0.30
		Full Divided Light Grilles	0.32	0.14	0.30
	Low-E Sun	Without Grilles	0.32	0.16	0.24
		Simulated Divided Light Grilles	0.32	0.13	0.19
		Finelight Grilles	0.32	0.14	0.21
		Finelight With Exterior Applied Grilles	0.32	0.13	0.19
		Full Divided Light Grilles	0.35	0.13	0.19
	Low-E PassiveSun®	Without Grilles	0.32	0.42	0.47
		Simulated Divided Light Grilles	0.32	0.34	0.37
		Finelight Grilles	0.32	0.37	0.42
		Finelight With Exterior Applied Grilles	0.32	0.34	0.37
		Full Divided Light Grilles	0.35	0.34	0.37
	Clear Dual-Pane	Without Grilles	0.44	0.47	0.49
		Simulated Divided Light Grilles	0.44	0.38	0.39
		Finelight Grilles	0.44	0.42	0.44
		Finelight With Exterior Applied Grilles	0.44	0.38	0.39
		Full Divided Light Grilles	0.45	0.38	0.39

1) U-Factor defines the amount of heat loss through the total unit in BTU/hr-ft^2-°F. The lower the value, the less heat is lost through the entire product. Window values represent non-tempered glass. Use of tempered glass can increase U-Factor ratings. See andersenwindows.com/nfrc for specific performance values. Door values represent tempered glass. 2) Solar Heat Gain Coefficient (SHGC) defines the fraction of solar radiation admitted through the glass directly transmitted, as well as absorbed and subsequently released inward. The lower the value, the less heat is transmitted through the product. 3) Visible Transmittance (VT) measures how much light comes through a product (glass and frame). The higher the value, from 0 to 1, the more daylight the product lets in over the product's total unit area. Visible light transmittance is measured over the 380 to 760 nanometer portion of the solar spectrum.

- NFRC ratings are based on modeling by a third-party agency as validated by an independent test lab in compliance with NFRC program and procedural requirements.
- This data is accurate as of August 2023. Due to ongoing product changes, updated test results, or new industry standards or requirements, this data may change over time. Ratings are for sizes specified by NFRC for testing and certification. Ratings may vary depending on unit size, use of tempered glass, different grille options, glass for high altitudes, etc.
- Values are for single units with given pane thickness and $^3/_4$" (19 mm) grilles for windows and 1" (25 mm) grilles for door products.

About the Label

Look for this certification label on every window and patio door you buy. The NFRC section was designed by the National Fenestration Rating Council to provide accurate information that helps you promote the energy efficiency of the homes you build. These ratings allow you – and your customers – to measure and compare the energy performance of similar products. If the product does not have this label, the NFRC has not verified its claims.

About the NFRC

The National Fenestration Rating Council (NFRC) is a nonpartisan coalition of professionals whose purpose is to provide fair, accurate and credible energy performance ratings for fenestration products. NFRC's membership includes manufacturers, suppliers, designers, specifiers, utility companies, government agencies and other building industry representatives.

Andersen Corporation is a founding member of the NFRC and continues to support its work by providing fair, accurate and credible energy performance ratings to consumers and the building industry. If you have any questions about the NFRC, its program or energy performance ratings, write them at: NFRC, 6305 Ivy Lane, Suite 410, Greenbelt, MD 20770. Phone: 301-589-1776. Website: **nfrc.org**

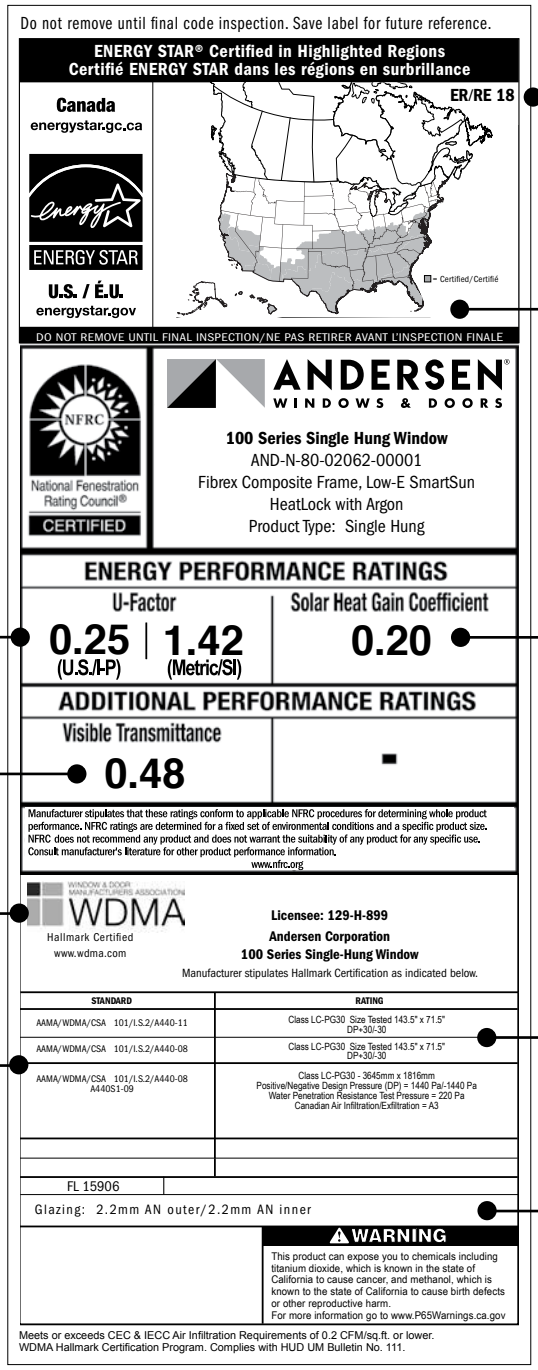

Energy Rating (ER) represents "Energy Rating" and is a rating used in Canada for product comparison purposes (the higher the ER number, the more energy saved during the heating season).

ENERGY STAR® Climate Zone Map is based on U-Factor and solar heat gain coefficient criteria for specific ENERGY STAR climate zones within the United States and Canada. The shading of the map shows which climate zone(s) a particular product and glass type is ENERGY STAR Version 7.0 certified in. Visit **andersenwindows.com/energystar** for more details.

U-Factor indicates how well a product prevents heat from escaping (the lower the number, the better).

Solar Heat Gain Coefficient measures how well a product blocks heat caused by sunlight (the lower the number, the more it will help reduce the use of air conditioning and as a result, reduce electrical bills and energy use).

Visible Transmittance refers to how much visible light comes through a product (the closer to 1.0, the more light is transmitted).

WDMA Hallmark Certification verifies the performance ratings of this product were tested by an independent testing laboratory and verified by a third-party certification program.

Test Standards

Performance Grade (PG) and **Design Pressure (DP) Ratings**

Glass Construction used with this product type.

• NFRC ratings are based on modeling by a third-party agency as validated by an independent test lab in compliance with NFRC program and procedural requirements.
• "ENERGY STAR" is a registered trademark of the U.S. Environmental Protection Agency.

INSTALLATION ACCESSORIES

Optional accessories are available for the installation of Andersen® windows and patio doors. Keep instructions and safety information in mind when considering the installation and use of any Andersen product. For questions, contact your local Andersen supplier.

Fibrex® Trim Board

This solid cellular Fibrex trim board can be cut or ripped to size, and fastened using nails or screws. 3 ½" (89) x ¾" (19) thick in 10' (3048) lengths. Available in white, canvas, prairie grass, Sandtone, Terratone, cocoa bean, dark bronze, red rock, forest green, dove gray and black.

Vinyl Channels

Rigid vinyl "J" and "h" channels are ½" (13) deep and come in 150" (3810) lengths. "J" channels are ¾" (19) wide and "h" channels are 1" (25) wide. "J" and "h" channels are available in white, Sandtone and Terratone. "H" channels are ¾" (19) deep and come in 84" (2134) and 150" (3810) lengths. White "H" channels are ¾" (19) wide. Sandtone and Terratone "H" channels are 1" (25) wide.

Auxiliary Casing

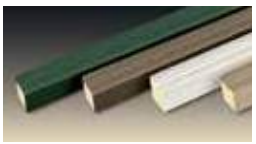

Made of cellular Fibrex material. 1 3/16" (30) x 1 3/16" (30) thick in 150" (3810) lengths. Available in white, canvas, Sandtone, Terratone, dark bronze, forest green and black.

Drip Cap

Heavy 24-gauge corrosion-resistant aluminum construction in two profiles to match frames. Available in 6' (1829), 10' (3048) and 12'-7 ½" (3848) lengths in white, canvas, Sandtone, Terratone, dark bronze, forest green and black.

Coil Stock

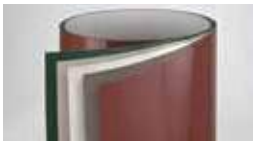

Made from .018" thick aluminum, Andersen coil stock is available in 24" (610) x 50' (15240) rolls and can be ordered in white, canvas, prairie grass, Sandtone, Terratone, cocoa bean, dark bronze, red rock, forest green, dove gray and black. Color-matched 1 ¼" (32)-long stainless steel trim nails are also available and can be ordered in 1 lb/454 kg boxes. Coil stock can be cut and formed to profiles at the job site. For insert window frames, coil stock fits into the exterior accessory kerf in the window frame, then wraps the existing wood window trim.

Shims

Flat self-hanging shims help with a secure installation. Available in boxes of 248 shims.

Straight Flashing Tape

Superior high-tack acrylic adhesive sticks and stays adhered. Split release liner for easy and accurate application. Available in 4" (102) or 6" (152) widths in 33' (10058) or 75' (22860) lengths in a single roll or case of 12.

Installation Foam

Available for sealing the unit into the rough opening, our minimally expanding low-pressure build foam remains soft and pliable.

Foam Backer Rod

⅜" (10) backer rod helps provide an air seal around the frame. Available in 100' (30480) rolls.

Color-Matched Sealant

This high-performance sealant provides excellent long-term durability and adhesion to Andersen product substrates and common building materials. Color-matched sealant, in white, canvas, prairie grass, Sandtone, Terratone, cocoa bean, dark bronze, red rock, forest green, dove gray and black, is available in single 10.1 ounce/300 ml tubes or in a case of 12 tubes. 20 ounce/591 ml foil packs are available in white, dark bronze and black.

Installation Screws

Properly sized installation screws are provided for windows that will be secured through the jamb.

ADDITIONAL INSTALLATION ACCESSORIES FOR INSERT & FLUSH FIN WINDOWS

Exterior Sill Extender for Insert Windows

1" (25)-wide PVC (shown) or 2" (51)-wide Fibrex sill extender fits into an exterior accessory kerf on the insert window frame to hide the gap between the new insert window and the existing window frame at the sill. Precut to fit a 14° sill slope, it can be cut to fit other slopes or lengths as needed. Available in white, Sandtone, Terratone, dark bronze and black.

Exterior Frame Extender for Insert Windows

1" (25)-wide PVC or 2" (51)-wide Fibrex (shown) frame extender fits into exterior accessory kerfs on the insert window frame to hide the gap around the sides and/or at the head between the new insert window and the existing window frame. Available in long lengths or can be ordered cut to approximate lengths for convenience at the job site. Available in white, Sandtone, Terratone, dark bronze and black.

Insert window shown with exterior frame extenders and sill extender in dark bronze.

Head Expander for Insert Windows

A head expander assists in filling the opening at the top of the insert window frame when doing an interior installation. Available in white, dark bronze and black. Two-tone options are available in black/white or dark bronze/white.

Interior Trim for Flush Fin Windows

Flat or curved interior trim for flush fin window frame provides a fast and easy way to cover existing aluminum window frames. The trim is pre-scored for easy sizing and includes a ¾" (19) adhesive strip on the back side for secure positioning. Flat interior trim is available in 12' (3658) lengths, and curved interior trim will come cut to the size of the unit. Available in white, Sandtone, dark bronze and black.

Dimensions in parentheses are in millimeters.

INSTALLATION INFORMATION

ROUGH OPENINGS

The purpose of a rough opening is to allow for proper spacing between the window or patio door unit and the building structure. The space is required for locating, leveling and squaring the unit during installation and to provide an area for insulation. A rough opening that is incorrectly sized may affect unit operation and may not allow for adequate fastening of the unit to the building structure. Andersen® rough opening dimensions are provided as a guideline to help determine the minimum amount of space needed between the window or patio door and the building structure. See appropriate product sections for rough opening guidelines for each product.

Keep in mind that rough opening dimensions may need to be altered from published guidelines, depending on installation methods, joining methods, replacement methods, etc. For example, flashing systems can reduce the amount of available rough opening space and should be factored in when calculating rough opening dimensions. The use of support or joining materials will encroach on the rough opening and may require additional rough opening space between the unit and the building structure, depending on the thickness of the flashing system and joining materials used. To facilitate drainage, the rough opening sill plate should never slope toward the interior. For challenging environments and other information, refer to EEBA's (Energy and Environmental Building Association) Water Management Guide (**eeba.org**).

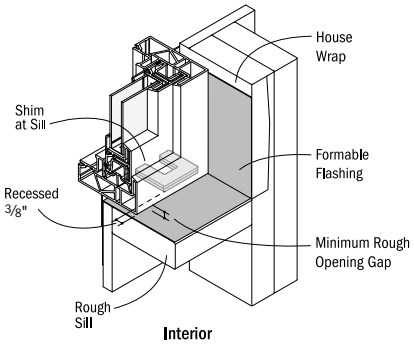

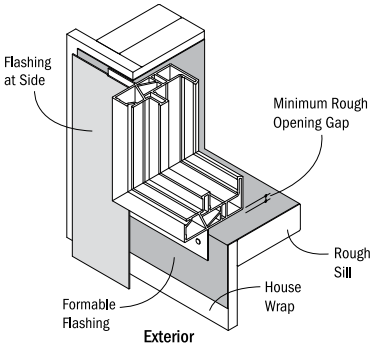

Interior and exterior example of window sill flashing in a membrane drainage system.

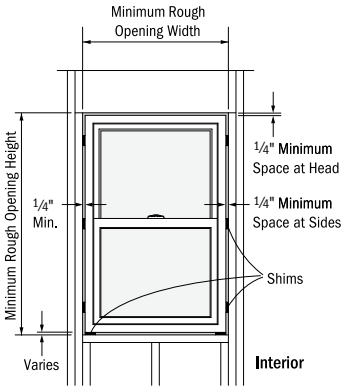

Example of window unit installed using Andersen published minimum rough opening dimensions.

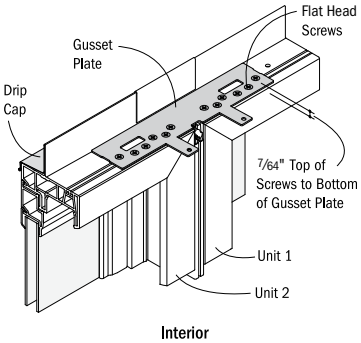

Example of two units joined together with the use of gusset plates and flat head screws that will require additional rough opening space.

IMPORTANCE OF PROPER INSTALLATION

Proper installation and maintenance of Andersen products is essential to attain optimum performance and operation. Installation instructions that provide guidelines for proper installation are typically provided with Andersen products. They are also available by visiting **andersenwindows.com**. Remember that every installation is different, and Andersen strongly recommends consultation with the local supplier or an experienced contractor, architect or structural engineer prior to the installation of any Andersen product. The method of attachment for Andersen products, fastener selection and code compliance is the responsibility of the architect, building owner, contractor, installer and/or consumer. For more complete installation details, visit **andersenwindows.com** or see your Andersen supplier.

GENERAL NOTES

When ordering, make certain you specify, then verify, the exact product, unit dimensions, configuration requirements, color and options you desire on each window or patio door. Before installing the product, we suggest you verify that it includes the features and options you ordered. Visit **andersenwindows.com** for product installation and joining guides. Printing limitations prohibit exact color duplication of products. View actual samples for building specifications. Andersen Corporation reserves the right to change details, specifications or sizes without notice. The customer assumes all risk of alterations made to Andersen products.

Dimensions in parentheses are in millimeters.

INSTALLATION INFORMATION

CODES

Appropriate selection of Andersen® products that conform to all applicable laws, ordinances, building codes and safety requirements is the sole responsibility of the architect, designer, building owner and/or contractor. Check with your local building code officials for specific information. Unit wind load, performance grade and energy performance information is provided on pages 111-119. For up-to-date product performance information, visit andersenwindows.com. The performance of any building system depends on the design and construction of the building system in its entirety, which should meet building code requirements, as well as address product and material limitations, and local environment and climate.

DRIP CAPS

Drip caps are a specific type of flashing or trim used at the head of a window or door to direct water from the drainage plane out beyond the face of the unit.

FLASHING

Flashing is an important element in a building's water management system. It is used to shed and direct water to the building exterior or to the drainage plane. Flashing materials are typically applied starting from the bottom and working upward, with each successive layer overlapping the previous one in shingle fashion. Water infiltration problems in any type of building can be reduced by properly flashing and/or sealing around all building openings, including windows and doors.

USE OF SHIMS

Shims are used along the side jambs of windows and doors to center the unit in the rough opening and to position it plumb, level and square. In addition, shims are always required for windows under the sill at the side jambs to lift it off the rough opening sill plate. Shims also enable a straight frame for proper weatherstrip contact and unit operation. If not placed properly, unit performance and operation can be affected. Use waterproof shims capable of supporting the weight of the product. When using tapered shims, use them in pairs with the tapers opposing each other to avoid tilting the unit or twisting (rotating) of the jambs.

SEALANTS

Sealants are elastic materials used to block the passage of water and/or air while allowing movement between the two sides of the joint. A sealant should bond tightly, and be able to expand and contract to accommodate joint movement without cracking or tearing away from the substrate. Surfaces must be clean, dry and sound for adequate sealant adhesion. Choose a sealant that is compatible with, and that will adhere adequately to, all building materials used in the window and patio door area. Proper sealant joint design is based upon the expected movement of adjacent materials and the movement capability of the sealant. A general rule of thumb is that the depth of the sealant joint should be equal to half the width (D = W/2), but generally not less than ¼" (6) or more than ½" (13). Foam-plastic backer rod can be used to limit the depth of the sealant joint, to provide a backstop for tooling the sealant without damage to the bond. It also acts as a bond breaker to help minimize stress in the sealant. Sealants should be maintained seasonally, and repaired and/or replaced as needed.

GENERAL INSTALLATION GUIDELINES

1. Read and follow the installation guide in its entirety.
2. Decide whether you are integrating to a surface barrier or a membrane drainage system before installing the product. The appropriate method for your installation may vary based on building design, application and industry practices.
3. Make certain the drainage plane is continuous (proper overlaps to shed water, taped seams, etc.).
4. Andersen products should be installed only in the vertical position.
5. Check the rough opening to make sure it is sized properly, is square and is level.
6. Install the window or door plumb.
7. Install the window or door level.
8. Install the window or door square. Diagonal measurements should be within ⅛" (3).
9. Follow installation instructions to properly locate shims and to make sure that units are plumb, level and square. Shims are always required under the window jambs at the sill and along the jambs on the sides for windows and doors.
10. Check for squareness of unit before final anchoring of the product into the wall.
11. Anchor unit as directed with appropriate fasteners.
12. Integrate the window and door into the drainage plane of the wall using quality flashing and sealing materials. All flashing materials should be properly overlapped to shed water.
13. Allow ¼" (6) minimum space for a sealant joint around perimeter of unit between exterior finish materials and unit.
14. Insulate and seal the interior cavity between the window or door frame and the rough opening.
15. Check operation before application of interior trim.

CAUTIONS

1. Do not apply any type of film to insulating glass. Thermal stress and glass damage can result. Andersen Corporation is not responsible for product performance when films are applied to Andersen products.
2. The use of removable insulating materials such as insulated window coverings, shutters and other shading devices may also cause thermal stress conditions and/or deformation of protective vinyl. In addition, excessive condensation may result, which can have a deteriorating effect on the window or door unit(s) involved. Andersen Corporation is not responsible for product performance when these kinds of materials or devices are applied to or used in conjunction with Andersen products.
3. In wall construction utilizing brick facades, leave adequate clearance between sill, jambs and brick for sealing and dimensional change of framework.
4. Acid solutions commonly used to wash brick and other masonry materials will damage glass, fasteners, hardware and metal flashing. Protect unit and follow cleaning product instructions carefully. Damage caused by acid solution is not covered under the Andersen limited warranty.
5. Andersen windows may be combined in almost unlimited ribbons or stacks if each unit is positively secured to structural elements on opposing sides and if the proper joining system is used. See page 107 for more information.

SAFETY GLASS

Unless specifically ordered, Andersen windows are not made with safety glass and, if broken, the glass could fragment, causing injury. Andersen windows may be ordered with tempered glass which may reduce the likelihood of injury when broken. All Andersen patio doors are made with tempered glass. Differences in appearance between tempered and non-tempered glass can be expected. Slight visual distortions may be noticeable and occur normally as a result of the tempering process. Building codes require safety glass in locations adjacent to or near doors and other locations.

WINDOW AND PATIO DOOR SAFETY

Windows may provide a secondary avenue of escape or rescue in an emergency, such as a fire. Every family should develop an escape plan and make sure family members know how to escape from the home in an emergency. In your plan, include two ways to escape from every room in case one way is blocked by fire or smoke, and make sure you have a designated meeting place outside. A window or a patio door is an alternate means of escape or rescue. Practice your plan until each member of the family understands it and is able to escape without assistance. Remember, you may not be able to reach children during a fire emergency. Teach children – even very young children – that they must escape from a fire in the home and never hide from the fire or from emergency personnel.

LOOKOUT FOR KIDS® PROGRAM

The Consumer Product Safety Commission has said: "Keep children away from open windows to prevent falls. Don't depend on insect screens to keep the child from falling out of the window. They are designed to keep insects out, not children in. Avoid placing furniture near windows to keep children from climbing to a window seat or sill." In an effort to educate consumers about the potential for child falls from windows, Andersen Corporation created the LookOut For Kids Program. It combines a window and door safety brochure and specific product instructions to help make window and door safety an important priority for consumers. For more information on child safety, write:

Andersen Corporation
LookOut For Kids Program
100 Fourth Avenue North
Bayport, MN 55003
Call 800-313-8889 or email
lofk@andersencorp.com

LOOK OUT! for kids®

Dimensions in parentheses are in millimeters.

Andersen® windows and patio doors can make significant contributions to the success of sustainable design strategies

As a charter member of the U.S. Green Building Council, we're active supporters of certified green buildings. Our products can help customers in pursuing green building programs, such as Leadership in Energy and Environmental Design (LEED®), the National Green Building Standard, Green Globes, GreenStar and more. Below is an overview of how our products may assist project teams with pursuing LEED v4 or the NAHB National Green Building Standard rating systems. More detailed credit summaries, as well as information about how Andersen products can support earlier versions of LEED certification (e.g., LEED v3 or LEED 2008), are available at **andersenwindows.com**.

LEED V4 FOR BUILDING DESIGN AND CONSTRUCTION: NEW CONSTRUCTION AND MAJOR RENOVATIONS

Integrative Process Credit:

Energy & Atmosphere

- Minimum energy performance prerequisite
- Optimize energy performance credit
- Renewable energy production credit
- Green power and carbon offsets credit

Materials & Resources

- Construction and demolition waste management planning credit
- Building product disclosure and optimization sourcing of raw materials credit
- Construction and demolition waste management credit

Indoor Environmental Quality

- Minimum indoor air quality performance prerequisite
- Minimum acoustic performance prerequisite – schools
- Enhanced indoor air quality strategies credit
- Low-emitting materials credit
- Thermal comfort credit
- Daylight credit
- Quality views credit
- Acoustic performance credit (option 2)

LEED V4 FOR BUILDING DESIGN AND CONSTRUCTION: HOMES AND MULTI-FAMILY MIDRISES

Energy & Atmosphere

- Minimum energy performance prerequisite
- Education of the homeowner, tenant or building prerequisite
- Annual energy use credit
- Building orientation for passive solar credit
- Air infiltration credit
- Windows credit

Materials & Resources

- Durability management prerequisite
- Environmentally preferable products credit
- Construction waste management credit

Indoor Environmental Quality

- Ventilation prerequisite
- Low-emitting products credit

ANSI ICC/ASHRAE 700-2015 NATIONAL GREEN BUILDING STANDARD

NGBS section numbers are referenced in parentheses.

Resource Efficiency

- Prefinished materials (601.7)
- Flashing (602.12)
- Exterior doors, including storm doors (602.1.10)
- Recycled construction materials (605.3)
- Bio-based products (606.1)
- Wood-based products (606.2)
- Manufacturer's environmental management system concepts (611.1)

Energy Efficiency

- Mandatory requirements (701.1)
- Building thermal envelope air sealing (701.4.3.1)
- Multi-family air leakage alternative (701.4.3.3)
- Fenestration air leakage (701.4.3.4)
- ICC IECC analysis (702.2.1)
- Energy performance analysis (702.2.2)
- UA improvement (703.2.1)
- Fenestration (703.2.5)
- Sun-tempered design (703.7.1)
- Passive cooling design (703.7.3)
- Passive solar heating design (703.7.4)

Indoor Environmental Quality

- Wood materials (901.4)
- Interior architectural coatings (901.9)
- Interior adhesives & sealants (901.9)
- Operable windows & sliding glass doors (902.1.5)

Energy Efficient

- Homeowner's manual (1001.1)
- Building construction manual (1002.1)

THE ENVIRONMENT HAS A BUSINESS PARTNER

Respect for the environment is nothing new at Andersen. For more than a century, it has been part of who we are. Our commitment to recycle and reclaim materials began simply because it was good business. Now it's part of our broader commitment to sustainability and responsible stewardship of all of our resources. Andersen is committed to providing you with long-lasting,* energy-efficient windows and patio doors. Visit **andersenwindows.com/sustainability** for more information.

Andersen® products are certified under the National Fenestration Rating Council (NFRC) voluntary third-party certification program designed to ensure accurate energy performance ratings and labeling.

The Window & Door Manufacturers Association (WDMA) Hallmark Certification program includes product testing and quality-control process audits to verify that Andersen windows and doors are produced in conformance with the industry standards for air, water resistance and structural performance.

Andersen Corporation is proud to be an ENERGY STAR® partner. For over 120 years, Andersen has built a reputation for environmental stewardship and energy-efficient products. In fact, Andersen has been part of the ENERGY STAR program since it started and was the first window manufacturer to be named an ENERGY STAR National Window Partner of the Year in 1999.

100 Series windows and doors are Indoor Advantage Gold™ Certified by SCS Global Services for indoor air quality. Andersen was the first window manufacturer to certify products for indoor air quality, beginning in 2008. For products covered, values, and certificate details, visit **andersenwindows.com/environmental**.

100 Series windows and doors are Recycled Content Certified by SCS Global Services. For values and certificate details, visit **andersenwindows.com/environmental**.

*Visit andersenwindows.com/warranty for details.
All logos and marks are trademarks of their respective owners.

17 100 Series Window Overview
20 100 Series Casement & Awning Windows
32 100 Series Single-Hung Windows
55 100 Series Gliding Windows
68 100 Series Picture, Transom & Specialty Windows
88 100 Series Window Joining Details
94 100 Series Window Custom Sizes
99 100 Series Patio Door Overview
101 100 Series Gliding Patio Doors
103 100 Series Patio Door Sidelights & Transoms
105 100 Series Patio Door Joining Details
106 100 Series Patio Door Custom Sizes
107 Combination Designs, Product Performance & Installation

MIX
Paper from responsible sources
FSC® C022483
www.fsc.org

Printed on FSC® certified paper.

ANDERSEN®
WINDOWS & DOORS

All trademarks where denoted are marks of their respective owners.
©2023 Andersen Corporation. All rights reserved. 12/23 Part #9045491
Web Version Revised 03/2025

PDF NAVIGATION TIPS

Welcome to an overview of the enhanced navigation tools available in this PDF. **Before you begin be sure you are using the latest version of Adobe Acrobat Reader (March 2023)**, available at – **https://get.adobe.com/reader/**

BOOKMARK NAVIGATION

1

Acrobat will display the bookmarks panel on the right side when you open the PDF.

Bookmarks are the easiest way to find specific product information.

Select a topic and that page will be displayed.

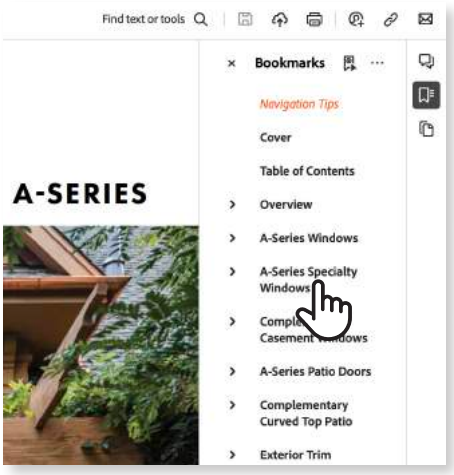

2

In the bookmarks panel you can print a specific section by holding down your **"Ctrl" key and clicking** on the section you want to print. Then choose **Print Section**.

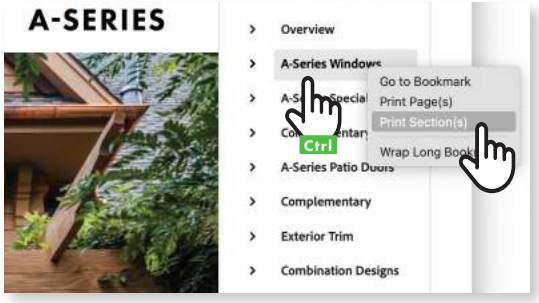

LINKS AND URL NAVIGATION

3

You can also use the **embedded links** to navigate between sections. All links are underlined in blue.

4

Website links automatically open in your web browser.

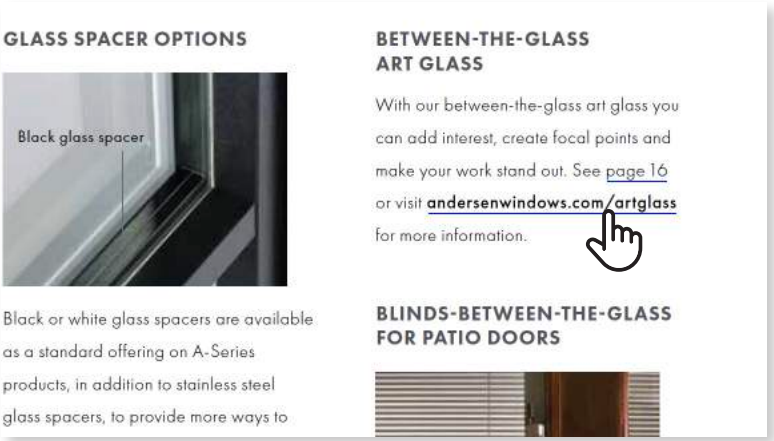

PDF NAVIGATION TIPS *(continued)*

TOOL BAR NAVIGATION

5

Top left side navigation tools.

The "commenting" and "highlight" tools here.

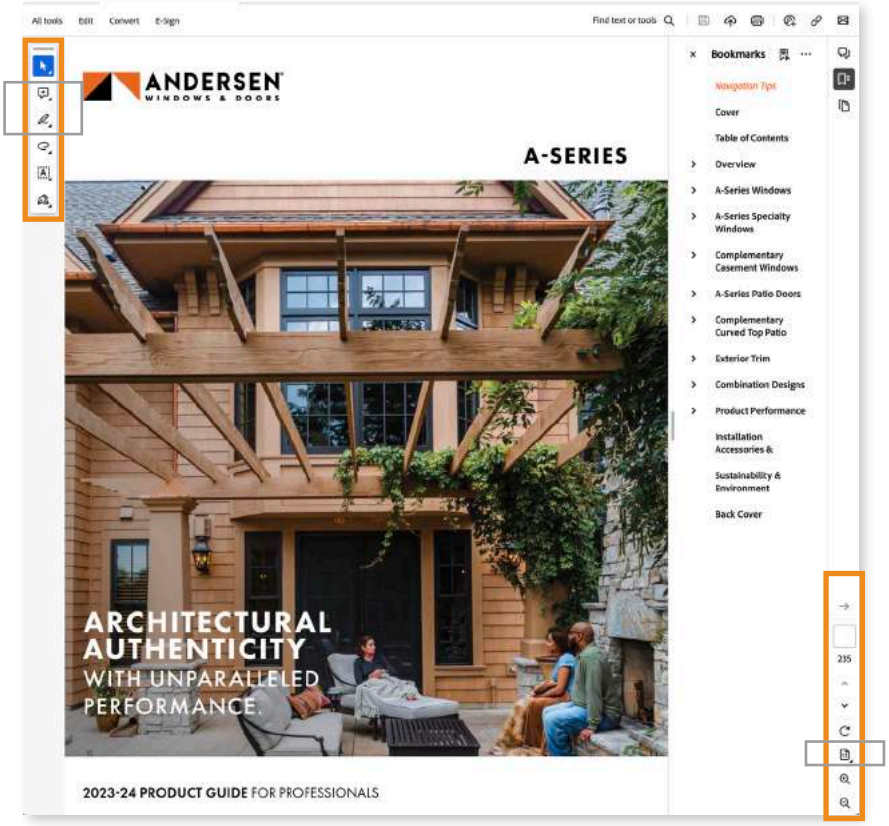

6

Lower right side navigation tools.

Click on the icon shown above to **scroll through a list of additional tools.**

Add additional navigation tools by adjusting the default settings in Acrobat.

7

Add **"Previous View"** tool.

Go to the lower right side navigation tools. **Scroll through the list and "pin" the previous view icon**

A left facing arrow will be added to the tool bar allowing you to go back to the previous page you viewed.

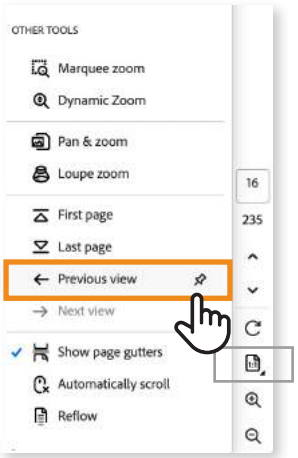

8

Add **"Loupe Zoom"** tool.

Go to the lower right side navigation tools. **Scroll through the list and "pin" the loupe zoom icon.**

The loupe icon will be added to the tool bar allowing you to zoom in on details without changing the page view.

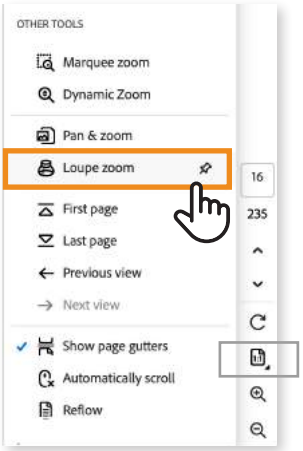

We are always looking for ways to improve.
Please send feedback to **webmarketing@andersencorp.com**.